300M SERIES

Modular planetary gearboxes

NORTH AMERICA EDITION

Bonfiglioli

Chapter	Description	Page
GENERAL INFORMATION		**2**
1	Symbols and units of measure	2
2	Introduction	4
3	Allowed temperature limits	4
4	Specifications	5
5	Versions	6
6	Output torque	8
7	Power	9
8	Efficiency	10
9	Reduction ratio	10
10	Angular speed	10
11	Service factor	10
12	Service factor requested by application	11
13	Life factor	11
14	Product selection	12
15	Installation	32
16	Lubrication	33
17	Storage	35
18	Supply conditions	35
SERIES 300M MODULAR PLANETARY GEARBOXES		**36**
19	300M Gearbox designation	36
20	3/V_M Gearbox designation	38
21	3/A Gearbox designation	40
22	Motor designation	42
23	Surface protection and painting options	43
24	Mounting position	45
25	Rating charts	50
26	Dimensions	235
CUSTOMER'S SHAFT		**527**
TORQUE ARM		**530**
TORQUE ARM KIT FOR FP VERSIONS		**530**

Chapter	Description	Page
NEGATIVE MULTIDISC BRAKE AND HYDRAULIC MOTORS		**531**
H1	symbols and units of measure	531
H2	negative multidisc brake	531
H3	inputs for hydraulic motors	532
H4	hydraulic motors	542
H5	technical features	542
H6	designation	543
H7	displacement selection	544
H8	checking	544
H9	technical data mg motors	545
H10	dimensions mg motors	547
H11	technical databrakes for mg motors	548
H12	installation	548
ELECTRIC MOTORS		**551**
M1	Symbols and units of measurement	551
M2	Introduction	552
M3	General characteristics	554
M4	Motor designation	556
M5	Variants and options	559
M6	Mechanical features	561
M7	Electrical characteristics	565
M8	Asynchronous brake motors	575
M9	DC brake motors type BN_FD and M_FD	576
M10	AC brake motors type BN_FA and M_FA	580
M11	Brake release systems	583
M12	Options	585
M13	Tables of motors correlation	597
M14	Motor rating charts BX-MX	601
M15	Motors dimensions BX-MX	605
M16	Motor rating charts BE-ME	619
M17	Motors dimensions BE-ME	625
M18	Motor rating charts BN-M	629
M19	Motors dimensions BN-M	641

Revisions

Refer to page 653 for the catalogue revision index. Visit www.bonfiglioli.com to search for catalogues with up-to-date revisions.

1 SYMBOLS AND UNITS OF MEASURE

Symbols	Units of Measure	Description
$A_{c\ 1,2}$	[lbs]	Calculated thrust load
$A_{n\ 1,2}$	[lbs]	Rated thrust load
A_{r2}	[lbs]	Thrust load at gearbox output shaft
F_h	–	Lifetime factor for gearbox calculation
$F_{h\ 1,2}$	–	Lifetime factor for bearing calculation
$f_{n\ 1,2}$	–	Speed factor referred to input and output shaft loading
f_L	–	Lifetime factor
f_m	–	Increase factor
$f_{h\ 1,2}$	–	Load corrective factor on shafts
f_S	–	Service factor
f_S'	–	Service factor required by the application
f_t	–	Thermal factor
f_v	–	Speed factor
h	[h]	Lifetime in hours
i	–	Reduction ratio
K_a	–	Axial load duty factor
K_r	–	Radial load factor
I	–	Intermittence factor
T_2	[lb•in]	Torque delivered to output shaft
T_{c2}	[lb•in]	Calculated torque at gearbox output
T_{2REF}	[lb•in]	Reference torque
T_{n2}	[lb•in]	Gearbox rated output torque
T_{2max}	[lb•in]	Gearbox max. output torque
Tb	[lb•in]	Rated brake torque

Symbols	Units of Measure	Description
$T_{r\ 1,2}$	[lb•in]	Required torque at gearbox
$n_{1,2}$	[rpm]	Angular speed
P_1	[hp]	Max transmissible power at gearbox input
P_1'	[hp]	Transmitted power at gearbox input
P_2	[hp]	Transmitted power at gearbox output
P_n	[hp]	Motor rated power
P_{r1}	[hp]	Required input power
P_{r2}	[hp]	Output power at n_2 max
P_{r2}'	[hp]	Output power at n_2 min
P_S	[hp]	Excess power
P_t	[hp]	Gearbox thermal capacity
$R_{c\ 1,2}$	[lbs]	Calculated radial load
$R_{n1\ 1,2}$	[lbs]	Rated radial load at shaft mid-point
$R_{x\ 1,2}$	[lbs]	Rated radial load at gearbox re-calculated with respect to different load application points
t_a	[°C/°F]	Ambient temperature
t_s	[°C/°F]	Surface temperature
t_o	[°C/°F]	Oil temperature
X	[mm/in]	Load application distance from shaft shoulder
η_d	–	Dynamic efficiency
Z	–	Frequency of starts

$_1$ value applies to input shaft

$_2$ value applies to output shaft

	Symbol referring to weight of gearboxes.
	Columns marked with this symbol indicate the reference page showing dimensions.
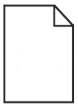	This symbol identifies reference page number.
	DANGER - WARNING This symbol indicates situations of danger, which if ignored, may result in serious injury to the operator.
	IMPORTANT This symbol indicates important technical information.
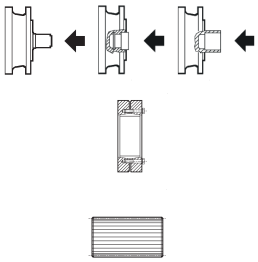	These symbols identify the mounting positions of accessories.
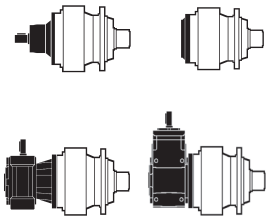	These symbols identify the position of gearbox input (black-filled areas).

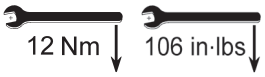	The number associated with the wrench symbol indicates the tightening torque for friction coupling screws.
	Negative multidisc brake.
	Hydraulic motor connection.
	Cover for standard input flanging.
	Inline units.
	Right angle units.
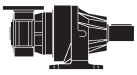	Worm-planetary combined design.
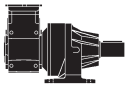	Bevel helical-planetary combined design.

2 INTRODUCTION

This catalogue presents BONFIGLIOLI RIDUTTORI's range of Series 300M modular planetary gearboxes. The range has been expanded and integrated with new sizes, technical improvements and enhanced modularity right through to the larger sizes. This feature signifies greater flexibility in internal production to ensure quick availability of products in the sizes and types requested either directly from the company or from the many affiliates belonging to the BONFIGLIOLI sales network in various countries around the world.

The gearboxes are tested in conformity with the following standards:

ISO 6336 : 2006 - method B for gears
ISO 281 for bearings
DIN 743 : 2012 for shafts

3 ALLOWED TEMPERATURE LIMITS

Symbols	Description / Condition	Value (*)	
		Synthetic Oil	Mineral Oil
t_a	Ambient temperature		
$t_{au\ min}$	Minimum operating ambient temperature	**- 30°C [-22°F]**	**-10°C [+14°F]**
$t_{au\ Max}$	Maximum operating ambient temperature	**+50°C [+122°F]**	**+40°C [+104°F]**
$t_{as\ min}$	Minimum storage ambient temperature	**-40°C [-40°F]**	**-10°C [+14°F]**
$t_{as\ Max}$	Maximum storage ambient temperature	**+50°C [+122°F]**	**+50°C [+122°F]**
t_s	Surface temperature		
$t_{s\ min}$	Minimum gearbox surface temperature starting with partial load (#)	**-25°C [-13°F]**	**-10°C [+14°F]**
$t_{sc\ min}$	Minimum gearbox surface temperature starting with full load	**-10°C [+14°F]**	**-5°C [+23°F]**
$t_{s\ Max}$	Maximum casing surface temperature during continuous operation (measured next to the gearbox input)	**+100°C [+212°F]**	**+100°C** (@) **[+212°F]**
t_o	Oil temperature		
$t_{o\ Max}$	Maximum oil temperature during continuous operation	**+95°C [+203°F]**	**+95°C** (@) **[+203°F]**

(*) = Refer to the table "Selection of the optimal oil viscosity" for further information about minimum and maximum values of different oil viscosity. For values of t_a < -20°C [+70°F] and t_s, t_o > 80 °C [+176°F], choose (as permitted in the product configuration stage) the sealing type of the most suitable material to the type of application. If needed contact Bonfiglioli Technical Service.

(@) = Continuous operation it is not advised if t_s and t_o range is 80°C [+176°F] to 95 °C [+203°F].

(#) = For full load start-up it is recommended to ramp-up and provide for greater absorption of the motor. If needed, contact Bonfiglioli Technical Service.

4 SPECIFICATIONS

The 300M series consist of a range of multi-purpose planetary gearboxes that can be operated by electric motors. Basic features are:

- 20 frame sizes of modular design
- output torque up to 11,388,260 lb•in
- transmissible power up to 1,400 hp
- ratios from 3.4:1 to 5234:1
- versions:
  - in-line with 1 to 4 reductions
  - right angle (spiral bevel gear set into first stage) with 2 to 4 reductions
- combinations with:
  - worm gear units
  - bevel-helical gear units
- flange, foot and shaft mounting arrangements
- slow output shafts: keyed, splined male, splined hollow, shrink disk mounted
- input adaptors for:
  - IEC and NEMA normalised electric motors
  - IEC integral motor for in-line units up to size 307 and for units combined with bevel helical and worm gears
- parallel input shafts
- gearmotors with electric motors IEC
- output shaft accessories:
  - flanges
  - pinions
  - splined bars
  - shrink discs

More design features:

- high ratio of transmissible torque to overall dimensions
- high overhung and axial load capacity due to heavy duty tapered roller bearings featured on H and P versions
- high efficiency
- inner parts are coupled through splined connections rather than keys
- planetary gears mounted onto self-centering carriers to ensure the most even load distribution among planetary gears
- housing made of spheroidal cast iron.

Configurations

(A 1)

Configuration	Power	Torque	Ratios	Efficiency	Noise level
	$0.33 \le P_n$ [hp] ≤ 100	$T_{2REF} \le 11{,}388{,}250$ lb•in	$3.4 \le i \le 2916$	High	Medium
	$0.33 \le P_n$ [hp] ≤ 75	$T_{2REF} \le 5{,}799{,}011$ lb•in	$7 \le i \le 953$	High	Medium
	$0.33 \le P_n$ [hp] ≤ 60	$T_{2REF} \le 5{,}799{,}011$ lb•in	$370 \le i \le 5234$	Medium	Low
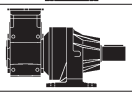	$0.33 \le P_n$ [hp] ≤ 30	$T_{2REF} \le 138{,}780$ lb•in	$18.7 \le i \le 731$	High	Low

A INPUT

B REDUCTIONS

A

1 Orbital hydraulic motor MG with/without brake
2 Hydraulic motor
3 Hydraulic motor setting
4 Cover
5 Negative brake
6 Compact electric motor
7 IEC or NEMA electric motor
8 Electric motor setting
9 Electric motor connection with integrated fan
10 Input shaft
11 Solid input shaft with fan

B

12 Right-angle reduction stage
13 Single planetary reduction stage
14 Two or more planetary reduction stages
15 Planetary reduction combined with wormgear unit
16 Planetary reduction stage combined with helical bevel gear unit

C

17 **MC/MZ** - Keyed or splined solid shaft output
18 **HC-NHC/HZ** - Keyed or splined heavy duty solid output shaft
19 **PC-NPC/PZ** - Output with support bracket and keyed or splined solid shaft
20 **FZ** - Splined hollow output shaft
21 **FP** - Hollow output shaft for shrink disc
22 **HC** - Parallel solid output shaft
23 **HZ** - Splined solid output shaft
24 **FZ/FZB** - Splined hollow output shaft
25 **FP** - Hollow output shaft for shrink disc
26 **PC** - Foot mount
27 **VK** - Reinforced output with parallel shaft for stirrers and mixers
28 **FDK** - Hollow shaft with double keyway
29 **FZP** - Hollow splined shaft with axial blockage device

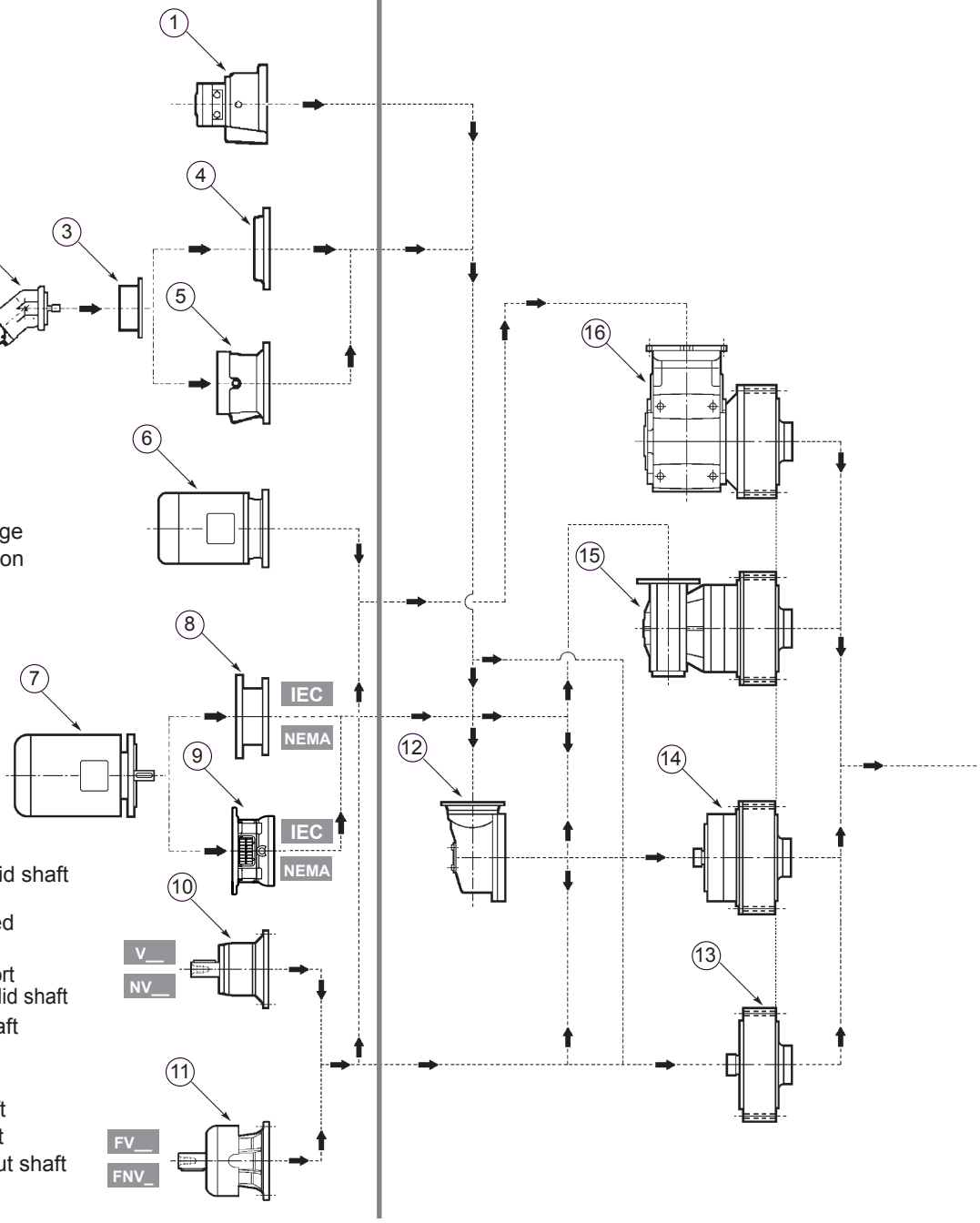

D

30 **W0A** - Flange
31 **P_** - Pinion
32 **M0A** - Sleeve coupling
33 End plate
34 **B0A** - Splined bar
35 **G0A** - Shrink disc

C OUTPUT

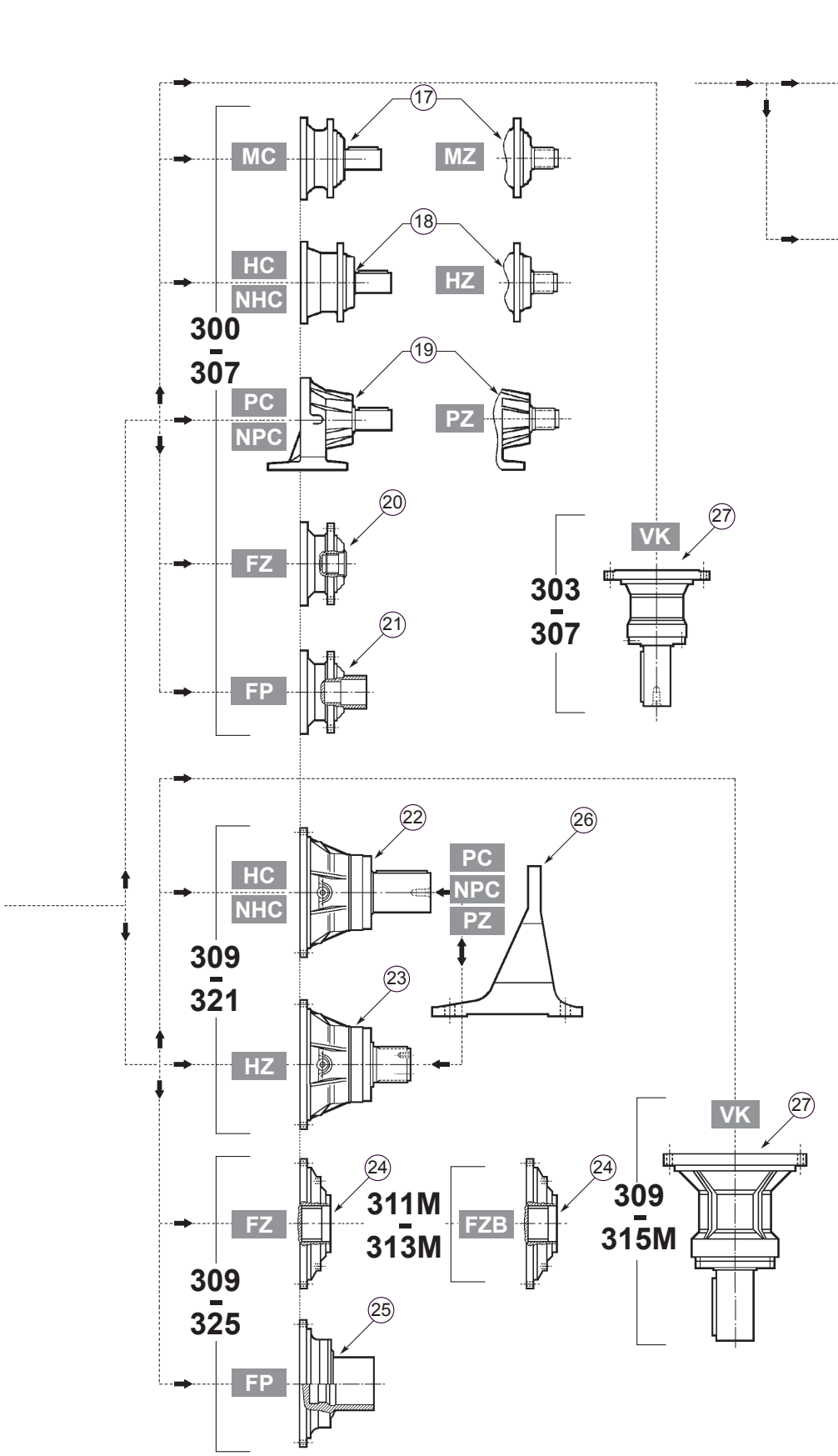

D FITTINGS

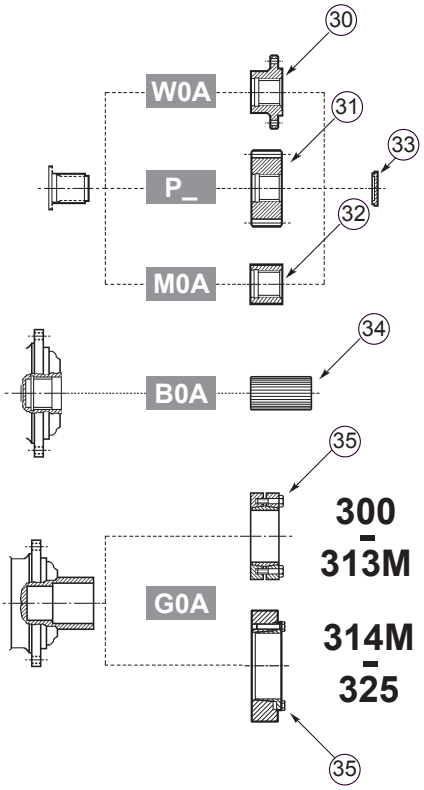

The following paragraphs contain information on essential elements for selection and correct use of gearmotors.

6 OUTPUT TORQUE

(A 2)

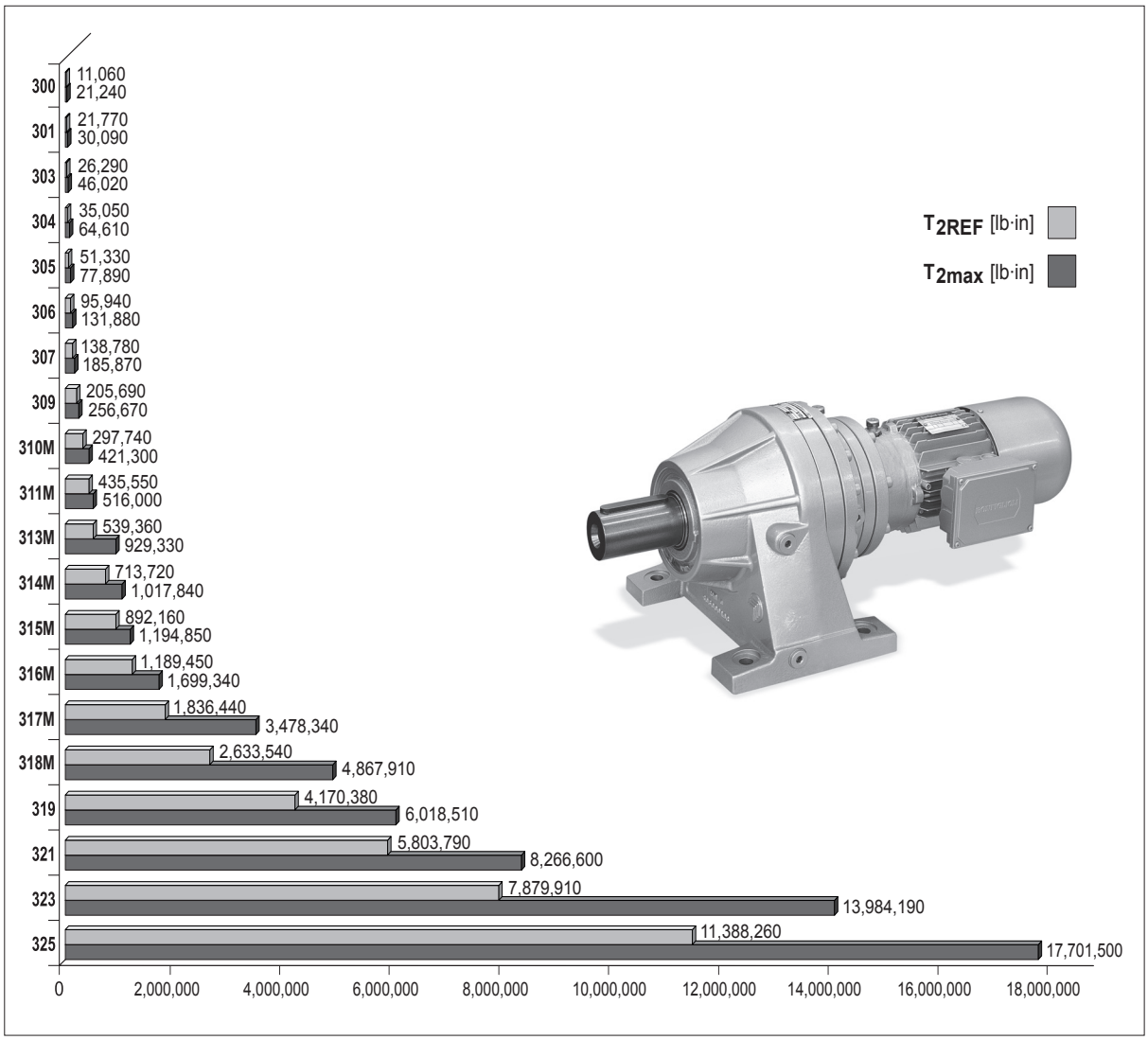

6.1 Reference torque T_{2REF} [lb•in]

It is the significant value for the size. It is equivalent to the maximum value of nominal torque T_{n2} for a life factor n_2 x h = 10000 (referred to single stage configuration L1).

6.2 Rated output torque T_{n2} [lb•in]

It is the output torque which the gearbox can transmit with steady load under working condition specified in the calculation method.

6.3 Maximun torque T_{2max} [lb•in]

It is the output torque that the gearbox can withstand under static or almost static conditions. It is generally meant as a momentary peak load or starting-up torque under load.
The values in the tables are valid only in versions with output splined shaft (accessories excluded).

6.4 Required torque T_{r2} [lb•in]

The torque drawn by the application. It must always be equal to or less than rated output torque T_{n2} for the gearbox under study.

7 POWER

7.1 Input rated power P_{n1} [hp]

P_{n1} is the maximum power that can be safely applied to the gearbox when the same is operated:
- at a n_1 drive speed
- yielding a theoretical lifetime of 10000 hours
- service factor f_s=1

Check that the formula here below is always satisfied:

$$P_1' \times fs \leq P_1 \quad (1)$$

7.2 Output power P_2 [hp]

This value is the net power delivered to the output shaft.
It can be calculated through the following formulas:

Efficiency values are listed in table (A3).

$$P_2 = P_1 \times \eta_d \quad (2)$$

$$P_2 = \frac{T_{r2} \times n_2}{63025} \quad (3)$$

7.3 Thermal power P_t [hp]

This parameter is linked to the gearbox thermal limit. Values for the thermal capacity are listed within the rating charts of gearboxes and gearmotors and represent the mechanical power that can be transmitted continuously at an input speed n_1 and at an ambient temperature of 20°C [70°F], without the lubricant exceeding the temperature of 85-90°C [185-194°F] and the gear case the temperature of 75-80°C [167-175°F], without the use a supplementary cooling system.

8 EFFICIENCY

8.1 Dynamic efficiency η_d

The parameter is defined as the relationship of the net power delivered to the output shaft P_2 to the power applied to the input shaft P_1:

$$\eta_d = \frac{P_2}{P_1} \quad (4)$$

Indicative values for the efficiency are listed in the chart here after.

(A 3)

No. of reductions	Configuration		
	Planetary	Combined with worm gear unit	Combined with right-angle unit
1	0.97	—	—
2	0.94	0.73	—
3	0.91	0.70	0.91
4	0.88	—	—

9 REDUCTION RATIO i

It is defined as the relationship of the speed the input shaft is driven at and the speed delivered at the output shaft of a gearbox.

$$i = \frac{n_1}{n_2} \quad (5)$$

10 ANGULAR SPEED

10.1 Input speed n_1 [rpm]

The speed the gearbox is driven at.
The value is coincident with the motor speed if this is directly connected to the gearbox.
Input speed should never exceed the n_{1max} value listed in the gearbox rating chart.

10,2 Output speed n_2 [rpm]

It is calculated from drive speed $\mathbf{n_1}$ and gear ratio **i**, as per the following equation:

$$n_2 = \frac{n_1}{i} \quad (6)$$

11 SERVICE FACTOR f_S

This is the relationship of the gear unit rated power to the power of the electric motor actually driving the unit.

$$f_S = \frac{P_{n1}}{P_1} \quad (7)$$

Bonfiglioli Riduttori

12 SERVICE FACTOR REQUESTED BY APPLICATION f_S'

It's a coefficient that represents the severity of the application. This factor takes into account, although approximately, the type of load the gearbox operates with, the specific duty cycle as well as the operating daily hours.
The table (A4) is of reference when determining the appropriate service factor for the application.

(A 4)

Service factor f_S' required depending on the application						
Type of load	Number of starts/hour	Total operating hours (h)				
		≤ 5000	10000	15000	25000	50000
		Daily operating hours (h)				
	z	h < 4	4 < h < 8	8 < h < 12	12 < h < 16	16 < h < 24
Uniform load	Z < 10	0.90	1.00	1.15	1.30	1.60
	10 < Z < 30	0.95	1.15	1.30	1.50	1.80
	30 < Z < 100	1.00	1.25	1.45	1.60	2.00
Moderate shock load	Z < 10	1.00	1.25	1.45	1.60	2.00
	10 < Z < 30	1.10	1.40	1.60	1.80	2.20
	30 < Z < 100	1.20	1.50	1.70	2.00	2.40
Heavy shock load	Z < 10	1.20	1.50	1.70	2.00	2.40
	10 < Z < 30	1.30	1.60	1.80	2.10	2.60
	30 < Z < 100	1.40	1.75	2.00	2.30	2.80

13 LIFE FACTOR F_{h1}, F_{h2}

Factor resulting by multiplying angular speed at input (n_1) or output (n_2) by actual operating working hours h, break times excluded.

$$F_{h1} = (n_1 \times h) \quad (8)$$

$$F_{h2} = (n_2 \times h) \quad (9)$$

Life factor is directly proportional to gearbox rpms during the whole duty time

14 PRODUCT SELECTION

Bonfiglioli Forever Forward	TECHNICAL DATA REQUIRED FOR THE SELECTION OF 300M	Nr:	
		Date:	
		Rev_	Date:

		A)	*GENERAL DATA*						
#	1		Company / Customer						
#	2		Contact						
#	3		Branch / Distributor						
#	4		Order quantity						
	5		Delivery time						
		B_1)	*ELECTRIC MOTOR*			*B_2)*	*HYDRAULIC MOTOR*		
	6		Motor Type						
#	7	P_{n1}	Rated motor Power		[hp]	V	Displacement		[cm³]
#	8	P_{r1}	Motor power demand		[hp]	Δp	Max drop of pressure		[bar]
	9	n_1	Input speed		[rpm]	Q	Max oil flow rate		[l/min]
	10		Pole number						
	11		Motor mounting: B3 - B5 - B14						
		C_1)	*PLANETARY GEARBOX*						
#	12		Gearbox configuration						
#	13	i	Gear ratio						
#	14	n_2	Output speed		[rpm]				
#	15	M_{r2}	Output torque demand		[lb•in]				
#	16	M_{p2}	Peak torque demand		[lb•in]				
#	17	f_S	Service factor demand						
	18		Rotation of the output shaft [frontal view]:		**CW**			**CCW**	
#	19	L_{10H}	Bearings lifetime		[h]				
#	20		Gears lifetime		[h]				
	21	SF_{min}	Safety for tooth root stress		standard reference (ISO preferred)				
	22	SH_{min}	Safety for flank pressure		standard reference (ISO preferred)				
		D)	*ADDITIONAL LOADS*						
	23	R_{c2}	Radial load on output shaft		[lbs]				
	24	x_2	Load application distance from shaft shoulder		[lbs]				
	26	R_{c1}	Radial load on input shaft		[lbs]				
	27	x_1	Load application distance from shaft shoulder		[lbs]				
	29	A_{n2}	Thrust load on output shaft (+ / -)		[lbs]				
	30	A_{n1}	Thrust load on input shaft (+ / -)		[lbs]				
		E)	*APPLICATION*						
#	31		Type of application						
	32		Duty cycle	Time phase %	Time phase hours	Gearbox output torque [Nm]	Gearbox output speed [min-1]		
				,,,,	,,,,				
				,,,,	,,,,				
				,,,,	,,,,				
				,,,,	,,,,				
				,,,,	,,,,				
	33		Notes about Duty Cycle:						
			Duty type	**S1**	**S2**	**S3**	**S4-S8**		
	34	v_A	Ambient air velocity		[m/s]	≤ 0.5	> 0.5 ≤ 1.4	> 1.4	
#	35	t_a	Ambient temperature range		[°F]				
	36		Altitude a.s.l.		[ft]				
	37		Rating according FEM class	T-	L-	M-			
		F)	*OPTIONS OR ADDITIONAL REQUESTS*						
	38		Lubrication						
	39		Supplementary cooling systems						
	40		Paint coating						
	41		To specific requests for testing						
		G)	*NOTES*						
	42		Notes and additional Customer requirements:						
#	43		**PRJ number if present for Special Gearbox**						

Mandatory for the selection

The form. duly filled in. can be forwarded to our Technical Service which will assist the Customer in selecting the most suitable drive for the specific application.

14.1 PRODUCT SELECTION GUIDE

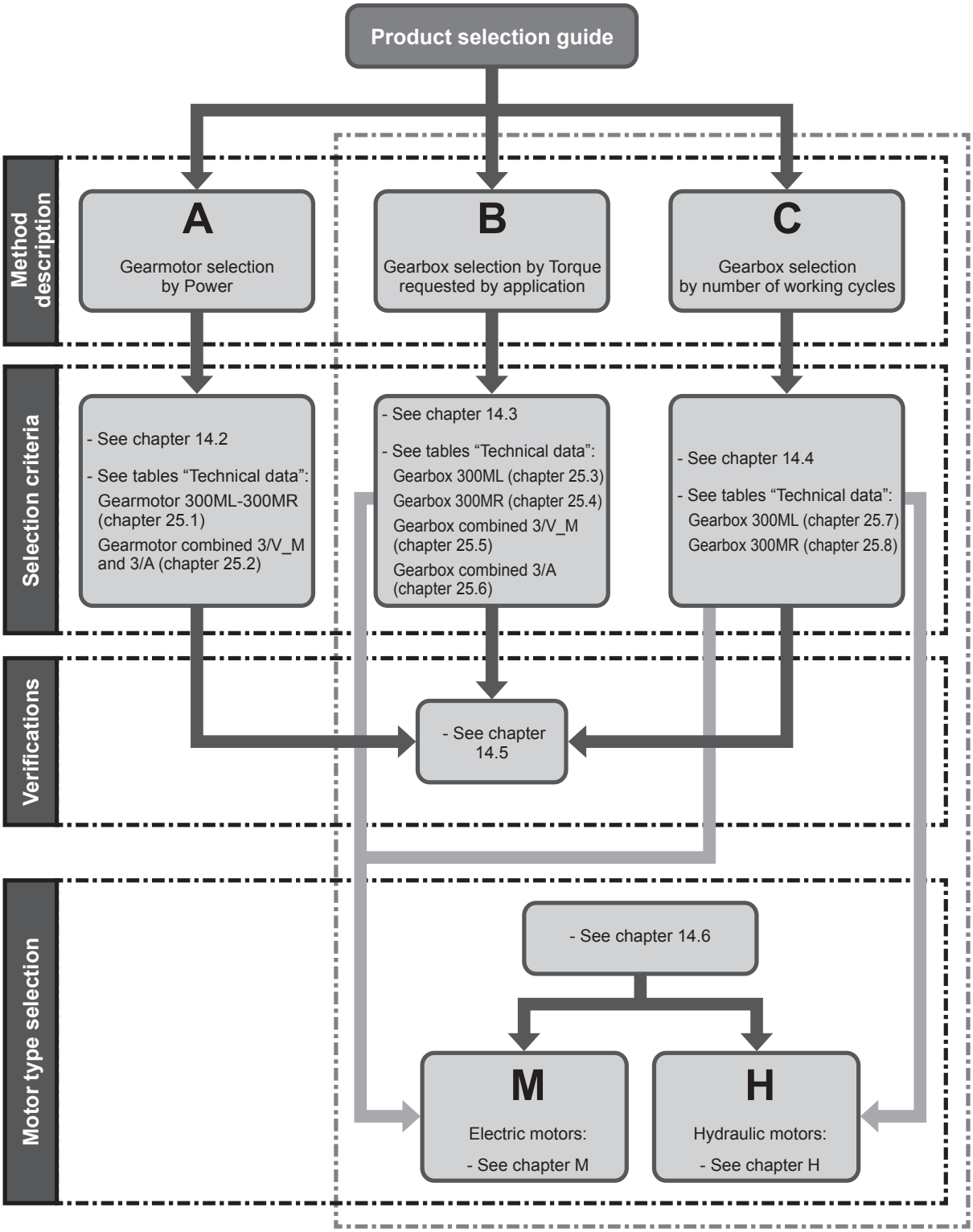

NOTE:
The selection criteria and specifications reported in this catalogue are not valid for every and each application, including those where the gearbox operates as a safety device preventing injury to persons or damage to objects, as is the case with hoisting equipment.
For these applications, the gearbox should be selected according to specific criteria and in compliance with the applicable safety regulations. Should this be the case we recommend that you seek advice from BONFIGLIOLI Technical Service.

14.2 METHOD A (Gearbox selection by power)

Based on application type, it should be defined :
a) Required service factor $\mathbf{f_S}$' (see tab A4);
b) Required drive power:

$$P_{r1} = \frac{T_{r2} \times n_2}{63025 \times \eta_d} \quad (10)$$

Table (A3) lists the indicative values of efficiency ηd for the different types of gearboxes.

c) After required power $\mathbf{P_{r1}}$ and output speed $\mathbf{n_2}$ are known, locate the gearmotor rating charts and select the one relevant to normalized power $\mathbf{P_n}$ equal to or greater than $\mathbf{P_{r1}}$:

$$P_n \geq P_{r1} \quad (11)$$

Unless otherwise specified, power $\mathbf{P_n}$ listed in the motor rating chart refers to continuous duty S1. For motors operating in conditions other than S1, determine type of duty according to CEI 2-3/IEC 60034-1 standards.
Note that for duty cycles from S2 to S8 and motor frame sizes up to 132 included, power may be upgraded over that specified for continuous duty. In this event, the condition to be verified is the following:

$$P_n = \frac{P_{r1}}{f_m} \quad (12)$$

The adjusting factor $\mathbf{f_m}$ can be obtained from table (A5).

(A 5)

	DUTY						
	S2			**S3***			**S4-S8**
	Cycle duration			Cyclic duration factor			Please contact us
	10	**30**	**60**	**25%**	**40%**	**60%**	
f_m	1.35	1.15	1.05	1.25	1.15	1.1	

* Cycle time must be equal to or less than 10 minutes. Should this not be the case contact our Technical Service for assistance.

Cyclic duration rate: see formula (25).

Cyclic duration rate is the relationship of operating time under load $\mathbf{t_r}$ to total cycle time ($\mathbf{t_f}$ + $\mathbf{t_r}$) where $\mathbf{t_f}$ is time at rest, expressed as a percentage.

Cyclic duration rate:

$$I = \frac{t_r}{t_f + t_r} \times 100 \quad (13)$$

For the output speed $\mathbf{n_2}$, or closest to, select the gearmotor that yields a service factor $\mathbf{f_S}$ meeting the following condition:

$$f_S \geq f_S' \quad (14)$$

⚠ In case of **FP** configuration, please see Verification paragraph (chapter 14.5 - item g) .

Bonfiglioli Riduttori

14.3 METHOD B (Gearbox selection by Torque requested by application)

Based on application type, it should be defined :

a) Required service factor $\mathbf{f_S'}$ (see tab A4);

b) Determine calculated torque according to required output torque $\mathbf{T_{r2}}$ as follows:

$$T_{c2} = T_{r2} \times f_S' \quad (15)$$

c) Determine gear ratio from required output speed $\mathbf{n_2}$ and drive speed $\mathbf{n_1}$:

$$i = \frac{n_1}{n_2} \quad (16)$$

d) Once $\mathbf{T_{c2}}$ and **i** are determined, locate the gearbox rating chart for the drive speed $\mathbf{n_1}$ and select a gearbox featuring the ratio i nearest to calculated ratio that also satisfies the condition:

$$T_{n2} \geq T_{c2} \quad (17)$$

If a IEC-normalised motor is to be fitted onto the gearbox, check availability of the applicable adapter.

⚠ In case of **FP** configuration, please see Verification paragraph (chapter 14.5 - item g) .

14.4 METHOD C (Gearbox selection by number of working cycles)

a) Determine the following according to the required application:
- Required service factor $\mathbf{f_S'}$ (see tab. A4)
- required gearbox working life h
- required drive unit

b) Define the calculated torque with the required output torque T_{r2}:

$$T_{c2} = T_{r2} \times f_S' \quad (18)$$

c) Calculate the life factor with required working life h and output speed n_2.:

$$Fh_2 = (n_2 \times h) \quad (19)$$

d) Calculate the required reduction ratio:

$$i = \frac{n_1}{n_2} \quad (20)$$

e) Select gearbox size which, having a reduction ratio close to the calculated value, which satisties the following

$$T_{c2} \leq T_{n2} \quad (21)$$

$$Fh_2 \leq (n_2 \times h) \quad (22)$$

where T_{n2} and Fh_2 are indicated in the tables on technical features for each gearbox size.

In case of applications in which the required torque T_{r2} and speed n_2 vary within a wide range, best selection could be an equivalent required torque given by:

$$T_{r2} = \sqrt[4]{\frac{(n_2 \times h)_A \times T_A^4 + (n_2 \times h)_B \times T_B^4 + (n_2 \times h)_C \times T_C^4 + \ldots\ldots}{(n_2 \times h)_A + (n_2 \times h)_B + (n_2 \times h)_C + \ldots\ldots}} \quad (23)$$

referred to:

(A 6)

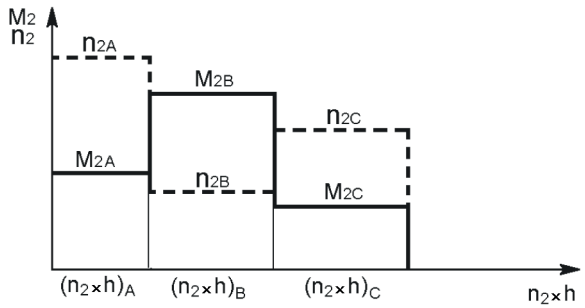

and calculating the life factor Fh with:

$$Fh_{calc} = (n_2 \times h)_A + (n_2 \times h)_B + (n_2 \times h)_C + \ldots \quad (24)$$

In case of **FP** configuration, please see Verification paragraph (chapter 14.5 - item g).

14.5 VERIFICATION

After selecting the drive units, please check the following:

a) Thermal power

The thermal power P_T is the maximum power that the gearbox can transmit mechanically, under continuous operation, without the internal temperature rising to a value that could damage the gearbox components.

Base thermal capacities values P_{TB} are listed in section C and calculated under the following operating conditions:
- Input speed **1500 min^{-1}** (some exceptions)
- Ambient temperature 20°C
- Foot base with splined or solid keyed shaft
- Horizontal mounting position (A, B, E, F, G, I, J, M)
- Installation in large area (air speed > 1.4 m/s)
- Continuous duty
- Max. installation altitude 1000 m
- Oil ISO VG 320

They are valid for a specific size and gearbox ratio.

Please refer to Bonfiglioli Technical Service:
- For L1 gearbox configuration
- For R2 gearbox configuration, size > 307

Otherwise, for a specific configuration, the total thermal power P_T can be calculated using the following formula:

$$P_T = P_{TB} \times f_{out} \times f_{Tamb} \times f_{speed} \times f_{pos} \times f_{input\ V} \times f_{air} \times f_{id} \times f_{nb} \quad (25)$$

Where:
P_T = overall thermal power
P_{TB} = Base thermal power
f_{out} = factor depends on output version
f_{Tamb} = factor for ambient temperature 40°C
f_{speed} = factor for specific input speed (1800, 1200, 1000 min^{-1})
f_{pos} = factor for vertical mounting position (T, O, Q, V)
$f_{input\ V}$ = factor for solid input shaft if present (apply only for size ≥ 309)
f_{air} = factor for installation in confined space (air speed ≤ 1.4 m/s)
f_{id} = factor for intermittent duty
f_{nb} = factor for negative multidisc brake (if present)

The specific factors are listed in the tables below.

The total thermal power obtained from this calculation must be greater than the P_{r1} (required input power).

$$P_T \geq P_{r1} \quad (26)$$

For specific configuration or application data different from the standard, please refer to Bonfiglioli Technical Service.

(A 7)

(L)	f_{out}				
300	**L2**		**L3**		**L4**
	i ≤ 20.1	i > 20.1			
FZ/FP/HC/ NHC/HZ/ MC/MZ/FDK	0.68	0.75	0.75		0.91
PZ/PC/NPC	1.00	1.00	1.00		1.00
301	**L2**		**L3**		**L4**
	i ≤ 20.1	i > 20.1	i ≤ 116	i > 116	
FZ/FP/HC/ NHC/HZ/ MC/MZ/FDK	0.65	0.70	0.78	0.80	0.97
PZ/PC/NPC	1.00		1.00		1.00
303	**L2**		**L3**		**L4**
FZ/FP/HC/ NHC/HZ/ MC/MZ/FDK	0.82		0.84		0.81
PZ/PC/NPC	1.00		—		
304	**L2**		**L3**		**L4**
FZ/FP/HC/ NHC/HZ/ MC/MZ/FDK	0.83		0.83		0.79
PZ/PC/NPC	1.00		1.00		1.00
305	**L2**		**L3**		**L4**
FZ/FP/HC/ NHC/HZ/ MC/MZ/FDK	0.80		0.80		0.78
PZ/PC/NPC	1.00		1.00		1.00
306	**L2**		**L3**		**L4**
	i ≤ 26.4	i > 26.4			
FZ/FP/HC/ NHC/HZ/ MC/MZ/FDK	0.70	0.75	0.72		0.75
PZ/PC/NPC	1.00	1.00	1.00		1.00
307	**L2**		**L3**		**L4**
	i ≤ 28.0	i > 28.0			
FZ/FP/HC/ NHC/HZ/ MC/MZ/FDK	0.77	0.81	0.80		0.81
PZ/PC/NPC	1.00	1.00	1.00		1.00
309	**L2**		**L3**		**L4**
	i ≤ 17.4 (i = 12.3)* (i = 14.7)*	i > 17.4			
FZ/FP/HC/ NHC/HZ/ MC/MZ/FDK	0.37	0.50	0.52		0.55
PZ/PC/NPC	1.00	1.00	1.00		1.00
310M	**L2**		**L3**		**L4**
	i ≤ 21.8 (i = 14.7)*	i > 21.8			
FZ/FP/HC/ NHC/HZ/ FDK	0.40	0.50	0.59		0.61
PZ/PC/NPC	1.00	1.00	1.00		1.00
311M	**L2**		**L3**		**L4**
	i ≤ 21.5	i > 21.5			
FZ/FP/HC/ NHC/HZ/ FZP	0.40	0.42	0.50		0.60
PZ/PC/NPC	1.00	1.00	1.00		1.00

(L)	f_{out}				
313M	**L2**		**L3**		**L4**
			i ≤ 92.4	i > 92.4	
FZ/FP/HC/ NHC/HZ/ FZP	*		0.43	0.55	0.60
PZ/PC/NPC	1.00		1.00		1.00
314M	**L2**		**L3**		**L4**
			i ≤ 73.9	i > 73.9	
FP/HC/NHC/ HZ/FZP	*		0.45	0.50	0.65
FZ	*		0.30	0.44	0.52
PZ/PC/NPC	1.00		1.00		1.00
315M	**L2**		**L3**		**L4**
	i ≤ 22.3	i > 22.3 n_1 ≤1200 rpm			
FP/HC/NHC/ HZ/FZP	*	0.47	0.46		0.50
FZ	*	0.38	0.37		0.40
PZ/PC/NPC	1.00	1.00	1.00		1.00
316M	**L2**		**L3**		**L4**
			i ≤ 114	i > 114	
FZ/FP/HC/ NHC/HZ/ FZP	*		0.45	0.50	0.60
PZ/PC/NPC	1.00		1.00		1.00
317M	**L2**		**L3**		**L4**
	i ≥ 22.1 n_1 = 900 rpm		i ≤ 69.3	i > 69.3	
FZ/FP/HC/ NHC/HZ/ FZP	*		*	0.60	0.65
PZ/PC/NPC	1.00		1.00	1.00	1.00
318M	**L2**		**L3**		**L4**
	n_1 = 500 rpm		i ≤ 98.2	i > 98.2	
FZ/FP/HC/ NHC/HZ/ FZP	0.55		*	0.50	0.57
PZ/PC/NPC	1.00		1.00	1.00	1.00
319	**L2**		**L3**		**L4**
	n_1 = 500 rpm		i = 84.8, 100, 126	i = 109 i > 126	
FZ/FP/HC/ NHC/HZ/ FZP	0.60		*	0.55	0.64
PZ/PC/NPC	1.00		1.00	1.00	1.00
321	—		**L3**		**L4**
			i ≤ 98.2	i > 98.2	i ≤ 308 / i > 308
FZ/FP/HC/ NHC/HZ/ FZP	—		0.51	0.60	0.50 / 0.56
PZ/PC/NPC	—		1.00	1.00	1.00 / 1.00
323	—		**L3**		**L4**
FZ/FP/FZP	—		1.00		1.00
325	—		**L3**		**L4**
FZ/FP/FZP	—		1.00		1.00

* BONFIGLIOLI TECHNICAL SERVICE

(A 8)

(R)	f_{out}		
300	**R2**	**R3**	**R4**
FZ/FP/HC/NHC/ HZ/MC/MZ/FDK	0.85	0.90	0.92
PZ/PC/NPC	1.00	1.00	1.00
301	**R2**	**R3**	**R4**
FZ/FP/HC/NHC/ HZ/MC/MZ/FDK	0.80	0.83	0.87
PZ/PC/NPC	1.00	1.00	1.00
303	**R2**	**R3**	**R4**
FZ/FP/HC/NHC/ HZ/MC/MZ/FDK	0.88	0.91	0.95
PZ/PC/NPC	1.00	1.00	1.00
304	**R2**	**R3**	**R4**
FZ/FP/HC/NHC/ HZ/MC/MZ/FDK	0.88	0.91	0.95
PZ/PC/NPC	1.00	1.00	1.00
305	**R2**	**R3**	**R4**
FZ/FP/HC/NHC/ HZ/MC/MZ/FDK	0.86	0.93	0.97
PZ/PC/NPC	1.00	1.00	1.00
306	**R2**	**R3**	**R4**
FZ/FP/HC/NHC/ HZ/MC/MZ/FDK	0.88	0.90	0.90
PZ/PC/NPC	1.00	1.00	1.00
307	—	**R3**	**R4**
FZ/FP/HC/NHC/ HZ/MC/MZ/FDK	—	0.78	0.81
PZ/PC/NPC	—	1.00	1.00
309	—	**R3**	**R4**
FZ/FP/HC/NHC/ HZ/MC/MZ/FDK	—	0.53	0.58
PZ/PC/NPC	—	1.00	1.00
310M	—	**R3**	**R4**
FZ/FP/HC/NHC/ HZ/FDK	—	0.55	0.60
PZ/PC/NPC	—	1.00	1.00
311M	—	**R3**	**R4**
FZ/FP/HC/NHC/ HZ/FZP	—	0.45	0.55
PZ/PC/NPC	—	1.00	1.00

(R)	f_{out}		
313M	—	**R3**	**R4**
FZ/FP/HC/NHC/ HZ/FZP	—	0.45	0.60
PZ/PC/NPC	—	1.00	1.00
314M	—	**R3**	**R4**
FZ/FP/HC/NHC/ HZ/FZP	—	*	0.60
PZ/PC/NPC	—	1.00	1.00
315M		**R3**	**R4**
FZ/FP/HC/NHC/ HZ/FZP	—	*	0.50
PZ/PC/NPC	—	1.00	1.00
316M	—	**R3**	**R4**
FZ/FP/HC/NHC/ HZ/FZP	—	*	0.55
PZ/PC/NPC	—	1.00	1.00
317M	—	**R3**	**R4**
FZ/FP/HC/NHC/ HZ/FZP	—	*	0.65
PZ/PC/NPC	—	1.00	1.00
318M		—	**R4**
FZ/FP/HC/NHC/ HZ/FZP	—	—	*
PZ/PC/NPC	—	—	1.00
319	—	—	**R4**
FZ/FP/HC/NHC/ HZ/FZP	—	—	0.60
PZ/PC/NPC	—	—	1.00
321	—	—	**R4**
FZ/FP/HC/NHC/ HZ/FZP	—	—	0.58
PZ/PC/NPC	—	—	1.00

* BONFIGLIOLI TECHNICAL SERVICE

(A 9)

(L)	f Tamb				
300	L2		L3		L4
	i ≤ 20.1	i > 20.1	i ≤ 116	i > 116	
	0.64	0.72	0.66	0.72	0.75
301	L2		L3		L4
	i ≤ 20.1	i > 20.1	i ≤ 116	i > 116	
	0.64	0.75	0.68	0.75	0.75
303	L2		L3		L4
	i ≤ 12.5	i > 12.5			
	0.58	0.68	0.65		0.75
304	L2		L3		L4
	i ≤ 22.7	i > 22.7	i ≤ 90.2	i > 90.2	
	0.63	0.69	0.66	0.70	0.75
305	L2		L3		L4
	i ≤ 26.4	i > 26.4	i ≤ 125	i > 125	
	0.63	0.66	0.65	0.70	0.75
306	L2		L3		L4
	i ≤ 26.4	i > 26.4			
	0.60	0.70	0.70		0.75
307	L2		L3		L4
	i ≤ 28.0 (i = 12.3)* (i = 14.7)*	i > 28.0			
	0.65	0.68	0.70		0.75
309	L2		L3		L4
	i ≤ 17.4 (i = 12.3)* (i = 14.7)*	i > 17.4			
	0.6	0.65	0.73		0.75
310M	L2		L3		L4
	i ≤ 21.8 (i = 14.7)*	i > 21.8			
	0.60	0.65	0.72		0.75

(L)	f Tamb				
311M	L2		L3		L4
	i ≤ 21.5	i > 21.5	i ≤ 89.3	i > 89.3	
	*	0.60	0.63	0.72	0.75
313M	L2		L3		L4
	i ≥ 21.8		i ≤ 92.4	i > 92.4	
	0.47		0.65	0.70	0.75
314M	L2		L3		L4
	i ≥ 22.3		i ≤ 73.9	i > 73.9	
	0.58		0.65	0.72	0.75
315M	L2		L3		L4
	i ≤ 22.3	i > 22.3	i ≤ 108	i > 108	
	*	0.47	0.64	0.71	0.75
316M	L2		L3		L4
	i ≤ 21.8	i > 21.8	i ≤ 114	i > 114	
	*	0.60	0.62	0.65	0.75
317M	L2		L3		L4
	i ≥ 22.1 n_1 = 1000 rpm		i ≤ 69.3	i > 69.3	
	0.50		0.50	0.65	0.75
318M	L2		L3		L4
	n_1 = 500 rpm		i ≤ 98.2	i > 98.2	
	0.60		0.60	0.60	0.60
319	L2		L3		L4
	n_1 = 500 rpm		i ≤ 126	i > 126	
	0.55		0.60	0.65	0.65
321	—		L3		L4
	—		0.6		0.70
323	—		L3		L4
	—		0.6		0.65
323	—		L3		L4
	—		0.6		0.65

* BONFIGLIOLI TECHNICAL SERVICE

(A 10)

(R)	f Tamb		
300	R2	R3	R4
	0.65	0.70	0.70
301	R2	R3	R4
	0.65	0.70	0.70
303	R2	R3	R4
	0.62	0.66	0.70
304	R2	R3	R4
	0.60	0.65	0.67
305	R2	R3	R4
	0.63	0.65	0.68
306	R2	R3	R4
	0.63	0.68	0.70
307	—	R3	R4
	—	0.65	0.69
309	—	R3	R4
	—	0.67	0.70
310M	—	R3	R4
	—	0.65	0.68
311M	—	R3	R4
	—	0.60	0.70

(R)	f Tamb		
313M	—	R3	R4
	—	0.63	0.70
314M	—	R3	R4
	—	0.55	0.60
315M	—	R3	R4
	—	0.65	0.70
316M	—	R3	R4
	—	0.60	0.65
317M	—	R3	R4
	—	0.60	0.65
318M	—	—	R4
	—	—	0.60
319	—	—	R4
	—	—	0.60
321	—	—	R4
	—	—	0.60

* BONFIGLIOLI TECHNICAL SERVICE

(A 11)

(L)	f_{speed}			
300	**L2**		**L3**	**L4**
	i ≤ 20.1	i > 20.1		
n_1 = 1800 rpm	0.80	0.95	0.95	0.95
n_1 = 1200 rpm	1.10	1.03	1.02	1.02
n_1 = 1000 rpm	1.30	1.05	1.05	1.05
301	**L2**		**L3**	**L4**
	i ≤ 20.1	i > 20.1		
n_1 = 1800 rpm	0.80	0.95	0.95	0.95
n_1 = 1200 rpm	1.12	1.03	1.02	1.02
n_1 = 1000 rpm	1.30	1.10	1.10	1.10
303	**L2**		**L3**	**L4**
	i ≤ 20.8	i > 20.8		
n_1 = 1800 rpm	0.80	0.95	0.95	0.95
n_1 = 1200 rpm	1.03	1.02	1.02	1.02
n_1 = 1000 rpm	1.05	1.10	1.05	1.05
304	**L2**		**L3**	**L4**
	i ≤ 22.7	i > 22.7		
n_1 = 1800 rpm	0.96	0.98	0.91	0.91
n_1 = 1200 rpm	1.05	1.03	1.04	1.04
n_1 = 1000 rpm	1.10	1.06	1.05	1.05
305	**L2**		**L3**	**L4**
	i ≤ 26.4	i > 26.4		
n_1 = 1800 rpm	0.90	0.93	0.90	0.90
n_1 = 1200 rpm	1.03	1.02	1.02	1.02
n_1 = 1000 rpm	1.06	1.04	1.04	1.04
306	**L2**		**L3**	**L4**
	i ≤ 26.4	i > 26.4		
n_1 = 1800 rpm	0.85	0.95	0.95	0.95
n_1 = 1200 rpm	1.03	1.02	1.02	1.02
n_1 = 1000 rpm	1.12	1.04	1.04	1.04
307	**L2**		**L3**	**L4**
	i ≤ 28.0	i > 28.0		
n_1 = 1800 rpm	0.87	0.92	0.97	0.97
n_1 = 1200 rpm	1.10	1.03	1.02	1.02
n_1 = 1000 rpm	1.18	1.06	1.05	1.05
309	**L2**		**L3**	**L4**
	i ≤ 25.4	i > 25.4		
n_1 = 1800 rpm	*	0.88	0.95	0.95
n_1 = 1200 rpm	1.10	1.06	1.02	1.02
n_1 = 1000 rpm	1.22	1.10	1.05	1.05
310M	**L2**		**L3**	**L4**
	i ≤ 25.4	i > 25.4		
n_1 = 1800 rpm	*	*	0.95	0.95
n_1 = 1200 rpm	1.20	1.15	1.02	1.02
n_1 = 1000 rpm	1.50	1.20	1.05	1.05
311M	**L2**		**L3**	**L4**
	i ≤ 21.5	i > 21.5		
n_1 = 1800 rpm	*	*	0.90	0.90
n_1 = 1200 rpm	1.10	1.15	1.05	1.05
n_1 = 1000 rpm	1.50	1.26	1.10	1.10
313M	**L2**		**L3**	**L4**
	i ≥ 21.8			
n_1 = 1800 rpm	*		0.60	0.60
n_1 = 1200 rpm	1.20		1.05	1.05
n_1 = 1000 rpm	1.50		1.10	1.10
314M	**L2**		**L3**	**L4**
	i ≥ 22.3			
n_1 = 1800 rpm	*		*	*
n_1 = 1200 rpm	1.20		1.05	1.05
n_1 = 1000 rpm	1.45		1.10	1.10

(L)	f_{speed}				
315M	**L2**		**L3**		**L4**
	i ≤ 22.3	i > 22.3			
n_1 = 1800 rpm	*	*	*		0.90
n_1 = 1200 rpm	1.50	1.16	1.15		1.07
n_1 = 1000 rpm	1.70	1.30	1.25		1.10
316M	**L2**		**L3**		**L4**
	i ≤ 21.8	i > 21.8	i ≤ 114	i > 114	
n_1 = 1800 rpm	*	*	*	*	0.90
n_1 = 1200 rpm	*	1.15	1.2	1.15	1.05
n_1 = 1000 rpm	*	1.45	1.30	1.20	1.07
317M	**L2**		**L3**		**L4**
			i ≤ 69.3	i > 69.3	
n_1 = 1800 rpm	*		*	*	0.90
n_1 = 1200 rpm	*		1.2	1.05	1.05
n_1 = 1000 rpm	1.00		1.25	1.20	1.20
318M	**L2**		**L3**		**L4**
			i ≤ 98.2	i > 98.2	
n_1 = 1800 rpm	*		*	*	*
n_1 = 1200 rpm	*		1.30	1.15	1.10
n_1 = 1000 rpm	*		1.50	1.20	1.20
319	**L2**		**L3**		**L4**
			i ≤ 126	i > 126	
n_1 = 1800 rpm	*		*	*	*
n_1 = 1200 rpm	*		1.25	1.15	1.10
n_1 = 1000 rpm	*		1.30	1.20	1.15
321	—		**L3**		**L4**
			i ≤ 126	i > 126	
n_1 = 1800 rpm	—		*	*	*
n_1 = 1200 rpm	—		*	*	1.05
n_1 = 1000 rpm	—		1.00	1.00	1.10
323	—		**L3**		**L4**
n_1 = 1800 rpm	—		*	*	*
n_1 = 1200 rpm	—		*	*	1.03
n_1 = 1000 rpm	—		*	*	1.05
325	—		**L3**		**L4**
n_1 = 1800 rpm	—		*	*	*
n_1 = 1200 rpm	—		*	*	1.03
n_1 = 1000 rpm	—		*	*	1.05

* BONFIGLIOLI TECHNICAL SERVICE

(A 12)

(R)	f speed		
300	**R2**	**R3**	**R4**
n_1 = 1800 rpm	0.95	0.97	0.97
n_1 = 1200 rpm	1.05	1.04	1.04
n_1 = 1000 rpm	1.15	1.05	1.05
301	**R2**	**R3**	**R4**
n_1 = 1800 rpm	0.88	0.90	0.90
n_1 = 1200 rpm	1.05	1.03	1.03
n_1 = 1000 rpm	1.15	1.05	1.05
303	**R2**	**R3**	**R4**
n_1 = 1800 rpm	0.90	0.93	0.93
n_1 = 1200 rpm	1.05	1.03	1.03
n_1 = 1000 rpm	1.10	1.05	1.05
304	**R2**	**R3**	**R4**
n_1 = 1800 rpm	0.90	0.93	0.93
n_1 = 1200 rpm	1.05	1.03	1.03
n_1 = 1000 rpm	1.08	1.05	1.05
305	**R2**	**R3**	**R4**
n_1 = 1800 rpm	0.90	0.93	0.93
n_1 = 1200 rpm	1.05	1.03	1.03
n_1 = 1000 rpm	1.12	1.05	1.05
306	**R2**	**R3**	**R4**
n_1 = 1800 rpm	0.85	0.88	0.88
n_1 = 1200 rpm	1.05	1.03	1.03
n_1 = 1000 rpm	1.08	1.05	1.05
307	—	**R3**	**R4**
n_1 = 1800 rpm	—	0.90	0.94
n1 = 1200 rpm	—	1.03	1.02
n_1 = 1000 rpm	—	1.06	1.05
309	—	**R3**	**R4**
n_1 = 1800 rpm	—	0.80	0.85
n_1 = 1200 rpm	—	1.03	1.02
n_1 = 1000 rpm	—	1.06	1.05
310M	—	**R3**	**R4**
n_1 = 1800 rpm	—	0.90	0.93
n_1 = 1200 rpm	—	1.03	1.02
n_1 = 1000 rpm	—	1.08	1.04
311M	—	**R3**	**R4**
n_1 = 1800 rpm	—	0.80	0.85
n_1 = 1200 rpm	—	1.07	1.05
n_1 = 1000 rpm	—	1.12	1.10

(R)	f speed		
313M	—	**R3**	**R4**
n_1 = 1800 rpm	—	0.80	0.85
n_1 = 1200 rpm	—	1.08	1.05
n_1 = 1000 rpm	—	1.12	1.08
314M	—	**R3**	**R4**
n_1 = 1800 rpm	—	*	0.90
n_1 = 1200 rpm	—	1.15	1.10
n_1 = 1000 rpm	—	1.25	1.18
315M	—	**R3**	**R4**
n_1 = 1800 rpm	—	*	0.80
n_1 = 1200 rpm	—	1.10	1.08
n_1 = 1000 rpm	—	1.25	1.15
316M	—	**R3**	**R4**
n_1 = 1800 rpm	—	*	0.80
n_1 = 1200 rpm	—	1.15	1.10
n_1 = 1000 rpm	—	1.25	1.15
317M	—	**R3**	**R4**
n_1 = 1800 rpm	—	*	0.75
n_1 = 1200 rpm	—	1.20	1.10
n_1 = 1000 rpm	—	1.25	1.15
318M	—	—	**R4**
n_1 = 1800 rpm	—	—	*
n_1 = 1200 rpm	—	—	1.08
n_1 = 1000 rpm	—	—	1.15
319	—	—	**R4**
n_1 = 1800 rpm	—	—	*
n_1 = 1200 rpm	—	—	1.05
n_1 = 1000 rpm	—	—	1.15
321	—	—	**R4**
n_1 = 1800 rpm	—	—	*
n_1 = 1200 rpm	—	—	1.05
n_1 = 1000 rpm	—	—	1.15

* BONFIGLIOLI TECHNICAL SERVICE

(A 13)

(L)	f pos			
300	L2		L3	L4
	i ≤ 20.1	i > 20.1		
	0.65	0.85	0.88	0.88
301	L2		L3	L4
	i ≤ 20.1	i > 20.1		
	0.70	0.90	0.88	0.88
303	L2		L3	L4
	0.83		0.90	0.90
304	L2		L3	L4
	i ≤ 22.7	i > 22.7		
	0.80	0.85	0.85	0.85
305	L2		L3	L4
	i ≤ 26.4	i > 26.4		
	0.80	0.85	0.85	0.85
306	L2		L3	L4
	i ≤ 26.4	i > 26.4		
	0.80	0.85	0.85	0.85
307	L2		L3	L4
	i ≤ 28.0	i > 28.0		
	0.80	0.85	0.85	0.85
309	L2		L3	L4
	i ≤ 25.4	i > 25.4		
	0.40	0.75	0.85	0.85
310M	L2		L3	L4
	i ≤ 25.4	i > 25.4		
	*	0.70	0.85	0.85
311M	L2		L3	L4
	i ≤ 21.5	i > 21.5		
	*	0.40	0.80	
313M	L2		L3	L4
	0.40		0.75	0.75
314M	L2		L3	L4
	*		0.80	0.80

(L)	f pos				
315M	L2	L3		L4	
		i ≤ 108	i > 108		
	*	0.50	0.75	0.75	
316M	L2	L3		L4	
		i ≤ 114	i > 114		
	*	*	0.65	0.70	
317M	L2	L3		L4	
		i ≤ 69.3	i > 69.3		
	*	0.50	0.55	0.75	
318M	L2	L3		L4	
		i ≤ 98.2	i > 98.2		
	0.70	*	*	0.70	
319	L2	L3		L4	
	i ≥ 26	i ≤ 126	i > 126		
	0.90	*	0.70	0.75	
321	—	L3		L4	
		i ≤ 98.2	i > 98.2	i ≤ 308	i > 308
	—	*	0.70	0.50	0.80
323	—	L3		L4	
		i ≤ 120	i > 120	i ≤ 500	i > 500
	—	0.86	0.93	*	0.75
325	—	L3		L4	
		i ≤ 120	i > 120	i ≤ 500	i > 500
	—	0.86	0.93	*	0.75

* BONFIGLIOLI TECHNICAL SERVICE

(A 14)

(R)	f pos		
300	R2	R3	R4
	0.87	0.90	0.90
301	R2	R3	R4
	0.86	0.90	0.90
303	R2	R3	R4
	0.90	0.92	0.92
304	R2	R3	R4
	0.88	0.92	0.92
305	R2	R3	R4
	0.86	0.90	0.90
306	R2	R3	R4
	0.88	0.92	0.92
307	—	R3	R4
	—	0.85	0.92
309	—	R3	R4
	—	0.84	0.92
310M	—	R3	R4
	—	0.90	0.93
311M	—	R3	R4
	—	0.65	0.70

(R)	f pos		
313M	—	R3	R4
	—	0.75	0.80
314M	—	R3	R4
	—	*	0.70
315M	—	R3	R4
	—	*	0.75
316M	—	R3	R4
	—	*	0.90
317M	—	R3	R4
	—	*	0.90
318M	—	—	R4
	—	—	0.70
319	—	—	R4
	—	—	0.70
321	—	—	R4
	—	—	0.70

* BONFIGLIOLI TECHNICAL SERVICE

(A 15)

(L)	f_{air} < 1.4 m/s		
300	L2	L3	L4
	0.50	0.75	0.75
301	L2	L3	L4
	0.60	0.70	0.70
303	L2	L3	L4
	0.55	0.60	0.60
304	L2	L3	L4
	0.66	0.70	0.70
305	L2	L3	L4
	0.60	0.63	0.63
306	L2	L3	L4
	0.55	0.65	0.65
307	L2	L3	L4
	0.50	0.60	0.60
309	L2	L3	L4
	*	0.6	0.6
310M	L2	L3	L4
	0.50	0.65	0.65
311M	L2	L3	L4
	0.50	0.60	0.60
313M	L2	L3	L4
	*	0.50	0.50
314M	L2	L3	L4
	*	0.60	0.60
315M	L2	L3	L4
	*	0.55	0.55
316M	L2	L3	L4
	*	0.55	0.55

(L)	f_{air} < 1.4 m/s				
317M	L2	L3		L4	
		i ≤ 69.3	i > 69.3		
	*	0.50	0.55	0.60	
318M	L2	L3		L4	
		i ≤ 98.2	i > 98.2		
	0.55	*	0.45	0.60	
319	L2	L3		L4	
		i ≤ 126	i > 126		
	0.60	0.45	0.60	0.60	
321	—	L3		L4	
		i ≤ 98.2	i > 98.2	i ≤ 308	i > 308
	—	*	0.60	0.60	0.70
323	—	L3		L4	
	—	0.70		0.60	
325	—	L3		L4	
	—	0.70		0.60	

* BONFIGLIOLI TECHNICAL SERVICE

(A 16)

(R)	f_{air} < 1.4 m/s		
300	R2	R3	R4
	0.70	0.75	0.75
301	R2	R3	R4
	0.60	0.65	0.65
303	R2	R3	R4
	0.65	0.65	0.65
304	R2	R3	R4
	0.55	0.60	0.60
305	R2	R3	R4
	0.60	0.65	0.65
306	R2	R3	R4
	0.60	0.65	0.65
307	—	R3	R4
	—	0.62	0.66
309	—	R3	R4
	—	0.60	0.65
310M	—	R3	R4
	—	0.60	0.65
311M	—	R3	R4
	—	0.55	0.60

(R)	f_{air} < 1.4 m/s		
313M	—	R3	R4
	—	0.55	0.60
314M	—	R3	R4
	—	0.55	0.65
315M	—	R3	R4
	—	*	0.60
316M	—	R3	R4
	—	*	0.60
317M	—	R3	R4
	—	*	0.65
318M	—	—	R4
	—	—	*
319	—	—	R4
	—	—	*
321	—	—	R4
	—	—	*

* BONFIGLIOLI TECHNICAL SERVICE

(A 17)

(L)	f input V			
309	L2		L3	L4
	0.92		0.95	0.95
310M	L2		L3	L4
	0.60		0.90	0.90
311M	L2		L3	L4
	i ≤ 21.5	i > 21.5		
	*	0.76	0.95	0.95
313M	L2		L3	L4
	i ≥ 21.5			
	0.40		0.90	0.90
314M	L2		L3	L4
	i ≥ 22.3			
	0.45		0.85	0.85
315M	L2		L3	L4
	i ≤ 22.3	i > 22.3		
	0.50	0.54	0.85	0.85

* BONFIGLIOLI TECHNICAL SERVICE

(L)	f input V			
316M	L2	L3		L4
		i ≤ 114	i > 114	
	*	0.6	0.45	0.45
317M	L2	L3		L4
		i ≤ 69.3	i > 69.3	
	1.00	0.65	0.70	0.75
318M	L2	L3		L4
		i ≤ 98.2	i > 98.2	
	1.00	*	0.80	0.80
319	L2	L3		L4
		i ≤ 126	i > 126	
	1.00	0.85	0.90	0.90
321	—	L3		L4
	—	1.00		0.85
323	—	L3		L4
	—	1.00		1.00
325	—	L3		L4
	—	1.00		1.00

(A 18)

(R)	f input V	
309	R3	R4
	0.94	0.97
310M	R3	R4
	0.90	0.95
311M	R3	R4
	0.90	0.95
313M	R3	R4
	0.90	0.93
314M	R3	R4
	0.70	0.75

* BONFIGLIOLI TECHNICAL SERVICE

(R)	f input V	
315M	R3	R4
	0.60	0.70
316M	R3	R4
	0.70	0.80
317M	R3	R4
	0.75	0.85
318M	—	R4
	—	0.90
319	—	R4
	—	0.90
321	—	R4
	—	0.90

(A 19)

	cycling duration factor [%] based 60 min running (running on load [min]/60*100)				
	100	80	60	40	20
f_{id}	1.0	1.1	1.4	1.7	2

(A 20)

	L1 only for Ex	L2	L3-L4	R2	R3-R4
f_{nb}	0.8	0.9	1	0.8	0.9

b) Supplementary cooling systems

In the event transmitted mechanical power is higher than transmissible thermal power (see tables of gearbox specifications), gearboxes are available complete with a cooling system.
These separate cooling systems are made up of an air-oil heat exchanger, a motor pump, a filter for warm oil and an electric system that incorporates an overload cutout for electric motors.
A special feature of these cooling systems is their low noise.
NOTE: If a supplementary cooling system is required with CSA/UL certified motors please contact our Technical Service

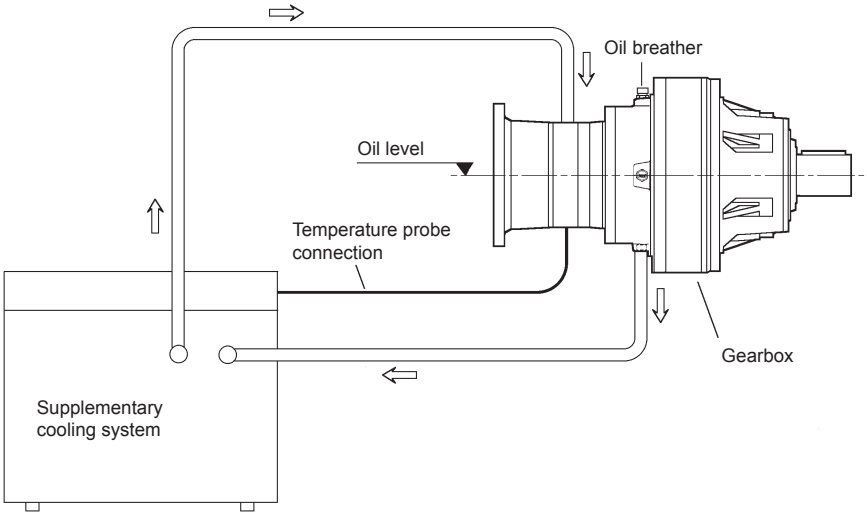

Technical data

(A 21)

Selection criteria		CR1	CR2	CR3
Power absorbtion	[hp]	0.75	1	1.5
Pumpflow	[l/min]	13	22	34
Air flow	[m³/h]	850	1500	2000
Noise level at 1 mt.	[dB(A)]	68	70	75
Weight	[*kg* / lbs]	*24* / 53	*36* / 80	*58* / 128

Calculate excess power P_s using this formula:

$$P_s = (1 - \eta_d) \times (P_{r1} - P_T) \quad (27)$$

Select cooling system size in chart (A10) according to ambient temperature ta (20° - 40°C [70° - 104°F]). Check that the cooling system you have selected will fit the gearbox (see table A11).
If this is not the case, contact our sales organization.

(A 22)

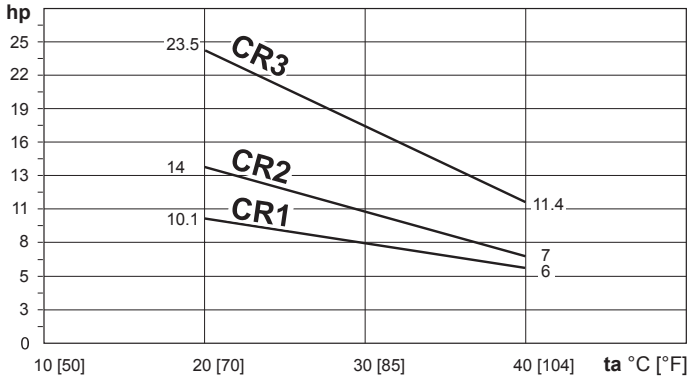

Electric motor connection with integrated fan - PF

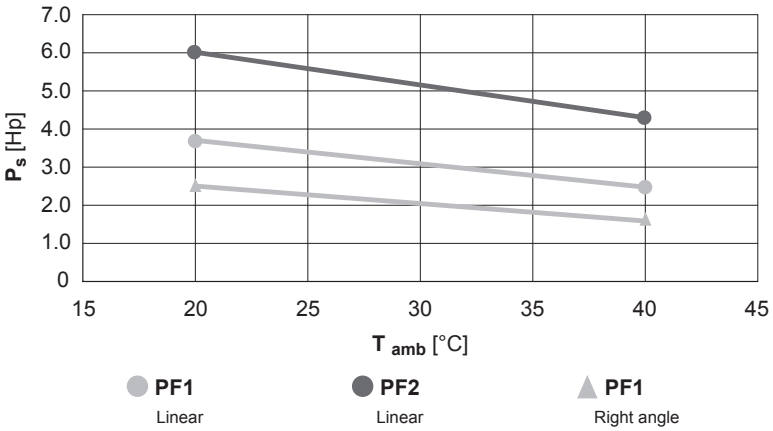

	L1	L2	L3	L4	R2	R3	R4
300	PF1*	PF1*	PF1*	PF1*	PF1*	PF1*	PF1*
301	PF1*	PF1*	PF1*	PF1*	PF1*	PF1*	PF1*
303	PF1*	PF1	PF1	PF1	PF1*	PF1*	PF1*
304	PF1*	PF1	PF1	PF1	PF1*	PF1*	PF1*
305	PF1*	PF1	PF1	PF1	PF1*	PF1*	PF1*
306	PF1	PF1	PF1	PF1	PF1*	PF1*	PF1*
307	PF2*	PF1	PF1	PF1	PF1*	PF1*	PF1*
309	PF2*	PF1*	PF1	PF1	PF1*	PF1*	PF1*
310M	PF2*	PF1*	PF1	PF1	PF1*	PF1*	PF1*
311M	PF2	PF2	PF1	PF1	PF1*	PF1*	PF1*
313M	—	PF2	PF1	PF1	PF1*	PF1*	PF1*
314M	—	PF2	PF1	PF1	—	PF1*	PF1*
315M	—	PF2	PF2	PF1	—	PF1*	PF1*
316M	—	PF2	PF2	PF1	—	PF1*	PF1*
317M	—	—	PF2	PF1	—	PF1*	PF1*
318M	—	—	PF2	PF2	—	—	PF1*
319	—	—	PF2	PF2	—	—	PF1*
321	—	—	—	PF2	—	—	PF1*
323	—	—	—	PF2	—	—	—
325	—	—	—	PF2	—	—	—

* For R execution and For T, V mounting position BONFIGLIOLI TECHNICAL SERVICE

Solid input shaft with fan - FV

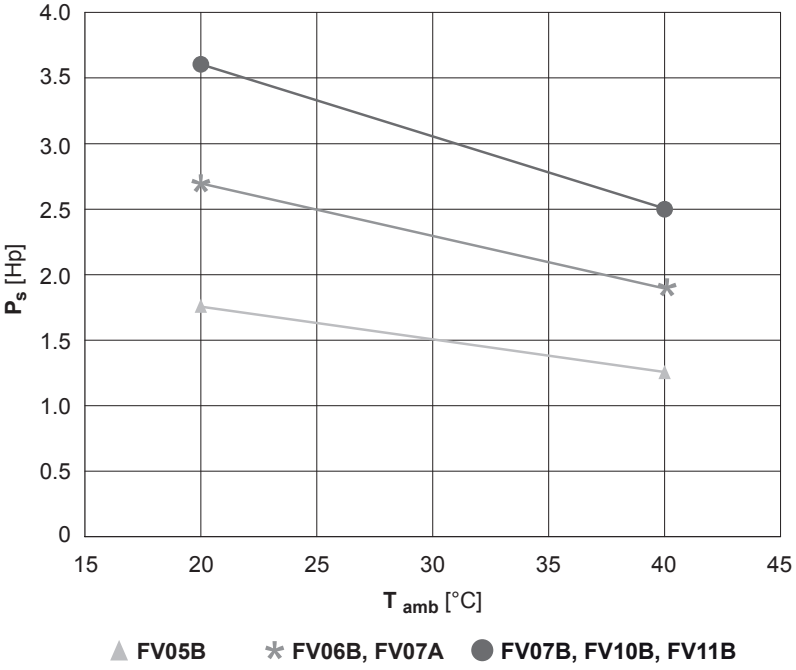

	L1	L2	L3	L4	R2	R3	R4
300	—	—	—	—	—	—	—
301	—	—	—	—	—	—	—
303	05B	—	—	—	—	—	—
304	05B	—	—	—	—	—	—
305	05B	—	—	—	—	—	—
306	06B	05B	—	—	—	—	—
307	07A 07B	05B	—	—	05B	—	—
309	07A 07B	05B	—	—	05B	—	—
310M	10B	06B	05B	—	06B	—	—
311M	11B	07A 07B	05B	—	06B	05B	—
313M	11B	07A 07B	05B	—	06B	05B	—
314M	—	10B	06B	05B	—	06B	—
315M	—	11B	07A 07B	05B	—	06B	05B
316M	—	11B	07A 07B	05B	—	06B	05B
317M	—	11B	07A 07B	05B	—	06B	05B
318M	—	—	11B	07A 07B	—	—	06B
319	—	—	11B	07A 07B	—	—	06B
321	—	—	11B	07A 07B	—	—	06B
323	—	—	—	11B	—	—	—
325	—	—	—	11B	—	—	—

Check that the cooling system you have selected will fi t the gearbox (see table A11). If this is not the case, contact our sales organization.

(A 23)

Gearbox	L1	L2	L3	L4	R2	R3	R4
306	CR1	CR1	—	—	—	—	—
307	CR1	CR1	—	—	CR1	—	—
309	CR1	CR1	CR1	—	CR1	—	—
310M	CR2	CR1	CR1	—	—	CR1	—
311M	CR2	CR1	CR1	—	CR1	CR1	—
313M	CR2	CR1	CR1	—	CR1	CR1	—
314M	CR3	CR2	CR1	—	—	CR1	—
315M	CR3	CR2	CR1	—	—	CR1	—
316M	CR3	CR2	CR1	—	—	CR1	—
317M	CR3	CR2	CR2	CR1	—	—	—
318M	CR3	CR2	CR2	CR1	—	—	—
319	CR3	CR2	CR2	CR1	—	—	—
321	CR3	CR2	CR2	CR2	—	—	—

Dimensions

Dimensions are in *mm (italic)* and inches.

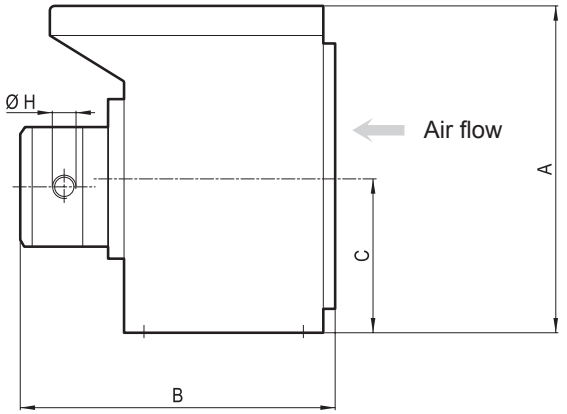

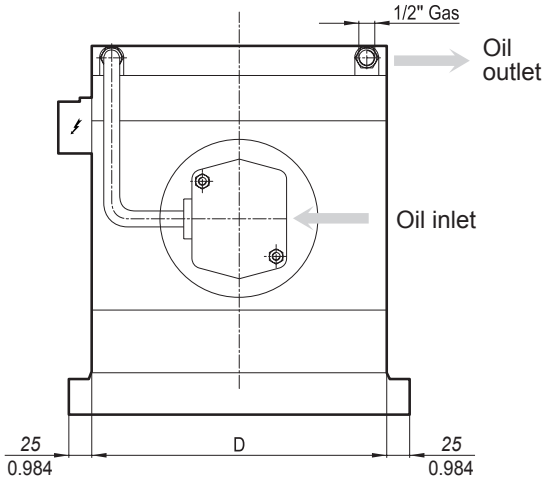

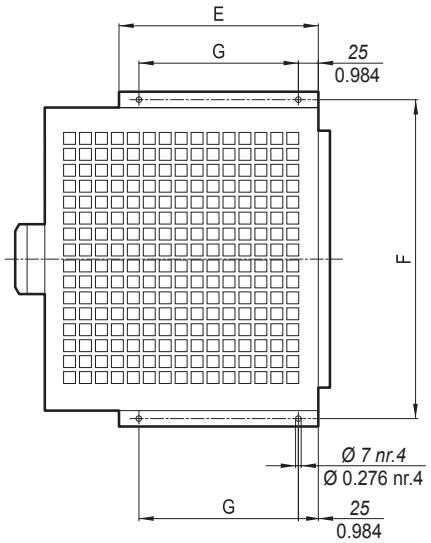

(A 24)

	A	B	C	D	E	F	G	H
	[*mm*] [in]							
CR1	*410* 16.142	*395* 15.551	*193* 7.598	*370* 14.567	*250* 9.843	*400* 15.748	*200* 7.874	1/2" Gas
CR2	*450* 17.717	*405* 15.945	*203* 7.992	*470* 18.504	*250* 9.843	*500* 19.685	*200* 7.874	3/4" Gas
CR3	*495* 19.488	*455* 17.913	*225* 8.858	*520* 20.472	*290* 11.417	*550* 21.654	*240* 9.449	3/4" Gas

c) Maximum torque
Make sure that neither the momentary peak torque nor the starting torque under load ever exceed the $\mathbf{T_{2max}}$ value that the gearbox is rated for (see figure A2).

d) Radial loads
Examine the application and establish:
- overhung load applying to input and/or output shaft through the following formula:

$$R_{c1-2} = \frac{2 \times T_{r1-2} \times K_r}{d} \quad (28)$$

R_{c1-2} = overhung load [lbs]
1 = for input shaft
2 = for output shaft
T_{r1-2} = Torque at the shaft [lb•in]
d = P.C.D [ins] of transmission element (sprocket, gear, pulley, etc.)
K_r =1 chain transmission
K_r =1.25 gear transmission
K_r =1.5-2.5 V-belt transmission

- Define the trust load position X onto shaft. Check this value with the chart indicating the load R_{x1-2} bearable by the gearbox. Check that the following is satisfied:

$$R_{c1-2} \leq Rx_{1-2} \times fh_{1-2} \quad (29)$$

where fh_{1-2} are the radial and thrust load corrective factor depending on the required life factor Fh_1 and Fh_2 (refers to radial and thrust loads in the “Dimensions” chapter).

e) Thrust loads
Check the thrust load, when exerted onto the output shaft, as specified for the radial load.
The following should be satisfied:

$$\pm A_{c2} \leq \pm A_{n2} \times fh_2 \quad (30)$$

(A 25)

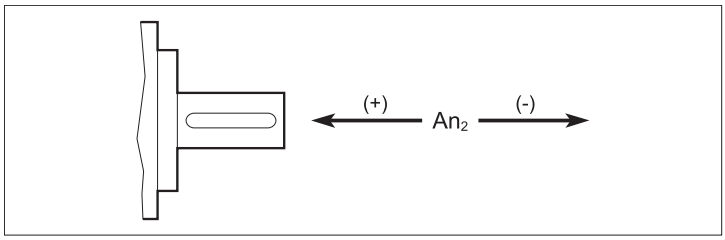

where fh_2 are the radial and thrust load corrective factor depending on the required life factor Fh_2 (refers to radial and thrust loads in the “Dimensions” chapter).

When a thrust load is combined with an axial load contact our Sales Dept. for a proper checking procedure.

f) VK output
Determine:
- Radial load $\mathbf{R_{c2}}$
- Thrust load $\mathbf{A_{c2}}$
- Offset x of load $\mathbf{R_{c2}}$

Look up the diagram relevant to the gearbox under study and identify permitted radial load $\mathbf{R_{x2}}$ corresponding to distance X and the ratio $\mathbf{A_{n2}/R_{n2}}$ nearest to value $\mathbf{A_{c2}/R_{c2}}$.
Make sure the following equation is verified:

$$R_{x2} \geq R_{c2} \quad (31)$$

Values in the diagram refer to:
- n_2 = 10 rpm
- 10000 hrs theoretical lifetime

For different output speed $\mathbf{n_2}$, or lifetime expectancy, consider:
- a speed factor $\mathbf{f_{n2}}$ as per table (A26):

(A 26)

n_2	1	2.5	5	10	15	25	50	100
f_{n2}	2.0	1.51	1.23	1.00	0.88	0.76	0.62	0.50

- a lifetime factor $\mathbf{f_L}$ according to table (A27).

(A 27)

Lifetime	2500 h	5000 h	10000 h	15000 h	25000 h	50000 h	100000 h	100
f_L	0.66	0.81	1.00	1.13	1.32	1.62	2.00	0.50

This condition must be verified:

$$R_{x2} \times f_{n2} \geq R_{c2} \times f_L \quad (32)$$

g) FP output (FDK and FZP when and if available)
On shaft-mounted installations, gearmotors produce a reaction force due to fixing position and motor weight and/or external loads from other connection elements.

These forces combination is added to normal load condition and will influence :
• berings life
• output shaft resistance
• flange tightening condition

In the event that there is an additional load (like a large size electric motor) and /or a single stage gearbox (with particular attention to sizes from 300 to 307), it' recommended to contact our Technical Service.
For the specific reaction loads due to fixing position, in the dimensional section for each size are reported the minimum lenght for torque reaction arms (single or double) that can reach the rated performances.

Bonfiglioli Riduttori

14.6 HOW TO SELECT THE MOTOR

14.6.1 Electric motor (see section M in this catalogue)

a) n_2 and dynamic efficiency η_d are known, calculate input power based on torque T_{r2} as follows

$$P_{r1} = \frac{T_{r2} \times n_2}{63025 \times \eta_d} \text{ [hp]} \qquad (33)$$

Table (A3) reports the values of efficiency η_d related to the different reduction stages of the gearboxes of series 300.

b) Look up the motor selection charts and select a size with such rated power to satisfy this condition:

$$P_{r1} \leq P_n \qquad (34)$$

4-pole motors and over should be preferred.

Unless otherwise specified, power P_n of motors indicated in the catalogue refers to continuous duty S1. For motors used in conditions other than S1, the type of duty required by reference to CEI 2-3/IEC 34-1 Standards must be mentioned.
For duties from S2 to S8 in particular and for IEC motor frame 132 or smaller, extra power can be obtained with respect to continuous duty power, consequently the following condition must be satisfied:

$$\frac{P_{r1}}{f_m} \leq P_n \qquad (35)$$

The increased power factor f_m can be obtained from table (A5).

For duties other than S1 with considerable number of starts per hour, factor Z must be considered (it is ascertained by using the information in the motors chapter). Factor Z defines the maximum number of starts for the application under consideration.

14.6.2 Hydraulic motor (see section H in this catalogue)

Determine hydraulic motor type according to the application, choosing from the options given in guidance table (A28).

(A 28)

Duty	Light		Medium		Heavy	
Pressure p [bar]	<175		175 - 200		200 - 450	
Motor design	orbital	gear motor 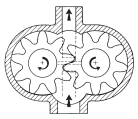	radial piston	axial piston 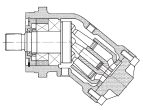	cam motor 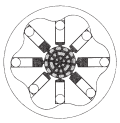	axial piston 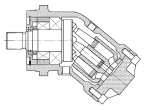
Speed	medium ≤ 700	high ≤ 3000	medium ≤ 500	high ≤ 4000	low ≤ 200	medium ≤ 4000
ηmh	0.80	0.85	0.95	0.93	0.93	0.93
ηv	0.90	0.87	0.95	0.95	0.95	0.95

Based on the specifi cations of gearbox input:
- input torque Mr1 [Nm]
- input speed n1 [min-1]
and on allowed pressure p [bar] for the hydraulic circuit, calculate the displacement of the hydraulic motor by formula:

$$V_c = \frac{20 \times \pi \times M_{r1}}{p \times \eta mh} \text{ [cm}^3\text{]} \quad (36)$$

where ηmh is the hydraulic mechanical efficiency of the motor (tab. A28).
Select a motor size with displacement V that satisfies the following condition:

$$V_c \leq V \quad (37)$$

Calculate the flow required for the hydraulic motor

$$Q_1 = \frac{V \times n_1}{\eta_v \times 1000} \text{ [l/min]} \quad (38)$$

where ηv is volumetric efficiency.
For hydraulic orbital motors by BONFIGLIOLI TRASMITAL, please see section H in this catalogue.
For other types of hydraulic motors, see the relevant technical literature.

15 INSTALLATION

Observing a few rules for correct installation is essential to the reliable and proper operation of the gearbox.
The rules set out here are intended as a preliminary guide to selecting gearbox.
For effective and proper installation, follow the instructions given in the Installation, use and maintenance manual available from our Sales network.
Following is a brief outline of installation rules:

a) Fastening:
– Place the gearbox on a surface providing adequate rigidity. Mating surfaces should be machined and flat.

– This applies especially to flange-mounted gearboxes with splined hollow output shafts (refer to the Installation, Operation and Maintenance Manual available on www.bonfiglioli.com).

– In applications that involve high radial loads at the output end, flange mounting is recommended for some gearboxes as this mounting pattern benefits from the double pilot diameters provided on these gearboxes (refer to the Installation, Operation and Maintenance Manual available on www.bonfiglioli.com).

– Make sure the gearbox is suitable for the required mounting position.

– Use bolts specified in Use and Maintenance Manual (available on www.bonfiglioli.com) and tighten the bolts to the rated values specified in the relevant charts.

b) Connections
– When fitting transmission elements onto the gearbox do not tap them with hammers or similar tools. To slide these parts in, use the service screws and tappings provided at the shaft ends.
Be sure to clean off any grease or rust preventative from the shafts before fitting any parts.

– Direction of rotation
Before wiring the motor please note the input/output shaft arrangement, as described in the diagram here after:

(A 29)

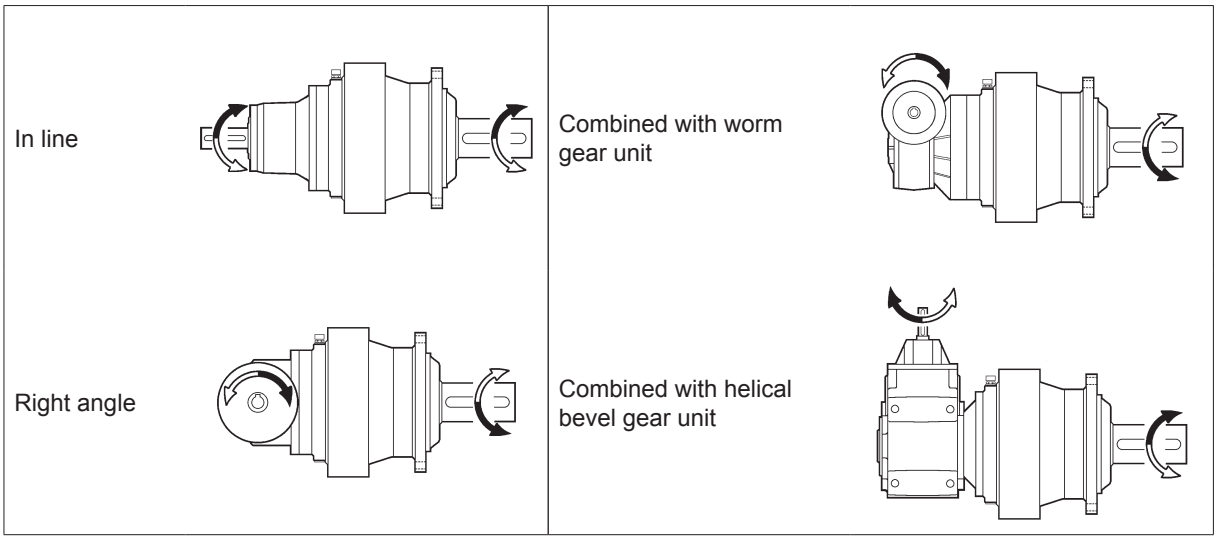

RA/RO: For the monodirectional applications or for the applications requiring a sense of rotation prevailing on that opposite to it, the selection of "**RA/RO**" option ensures the declared performance. For applications not requiring a prevailing sense of rotation with respect to each other, the performances are guaranteed regardless of the selected "**RA/RO**" option.

c) Paint coating
– Use paint compatible with the primer applied to the gearbox, see "Supply conditions".
Prior to painting, tape the seal rings installed on the shafts. Contact with the solvent may damage the seals with subsequent oil leakage.

d) Lubrication
– Prior to commissioning, fill the gearbox with the recommended type and quantity of oil (refer to the Installation, Operation and Maintenance Manual available on www.bonfiglioli.com).
The level is to be checked through the appropriate plug, or sight glass, each gearbox is provided with, and located according to the mounting position originally specified.

NOTE: Combined gearboxes feature separate lubrication for planetary stages and for worm gears (series 3/V_M) or bevel helical units (series 3/A).
The operations described above are not to be performed with life-lubed gearboxes, that are factory filled with synthetic oil.

16 LUBRICATION

Refer to the User's Manual available at www.bonfiglioli.com for indications about checking the oil level and its replacement for other types of gearboxes.
Do not mix mineral oils with synthetic oils and/or different brands.
However, oil level should be checked at regular intervals and topped up as required.
Check monthly if unit operates under intermittent duty, more frequently if duty is continuous.

16.1 Selection of the optimal oil viscosity (data relating to Shell Oils)

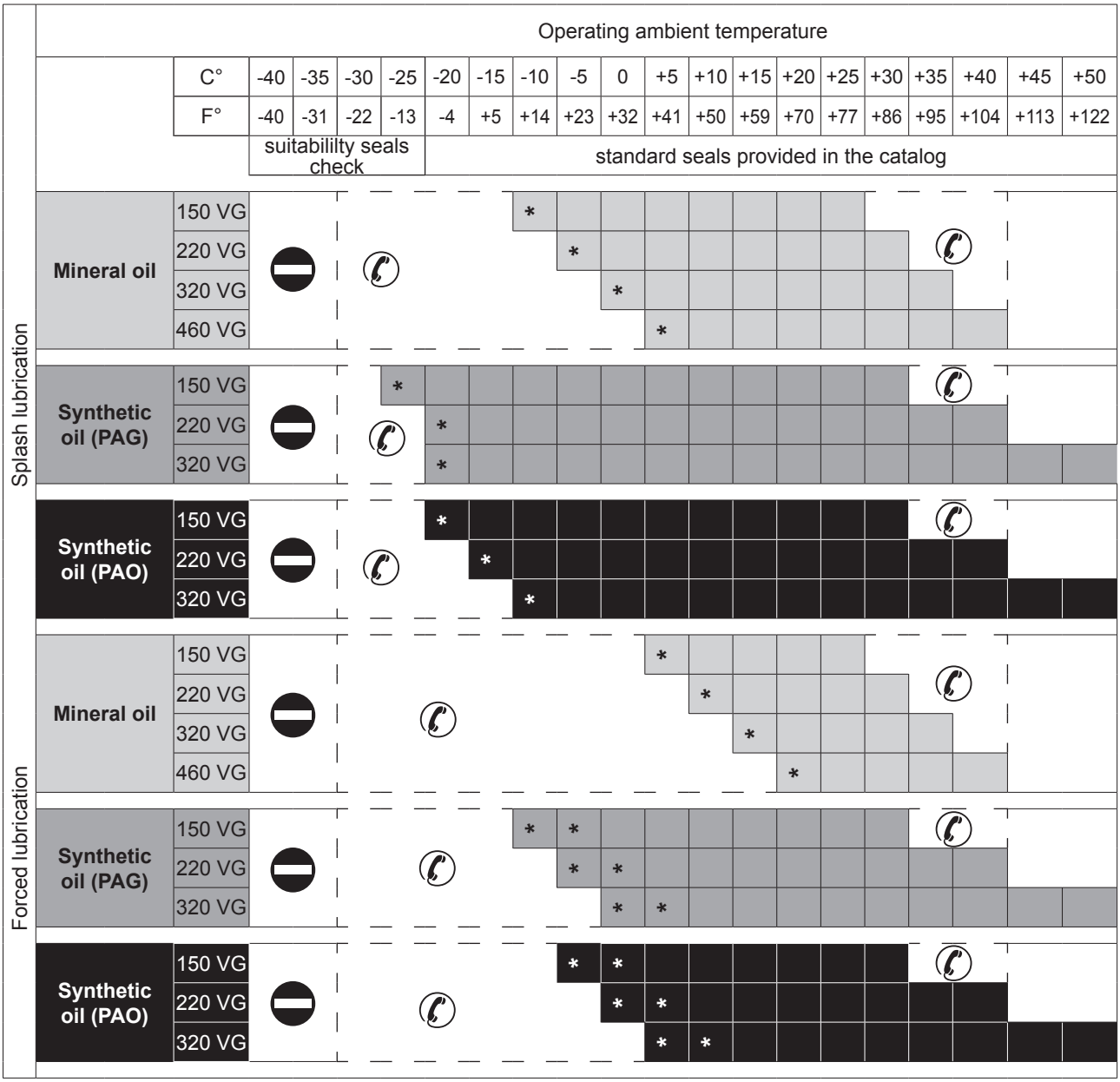

Recommended operating limits

Allowed operating limits.

Forbidden operating limits.

* = It is recommended to ramp-up and to provide for greater absorption of the motor.
If needed and in the event of impulse loads, contact Bonfiglioli Technical Service.

16.2 Lubrication for 300M series gearboxes

All gearboxes are oil-bath lubricated. For applications calling for gearboxes with a vertically positioned axis, in which oil coverage during operation would not be sufficient to ensure correct lubrication of upper bearings, suitable life lubrication systems are used.
Before start-up, fill the gearbox with the correct quantity of oil, selecting the viscosity level as per table (A10). These gearboxes are provided with oil filling, level and drain plugs.

Prior to starting-up, fill the gearbox with the appropriate quantity of oil.
Gearboxes are generally provided with oil fill, level and drain plugs. As such, the mounting position needs always to be specified when ordering the gearbox.
For the reference charts of oil plugs placement and quantity of lubricant, refer to the Installation, Operation and Maintenance Manual (available on www.bonfiglioli.com).

– Note: For applications with non-routine operating conditions, consult factory with complete information.
– Unless otherwise specified, gear units are supplied unlubricated. Primary gear units belonging to 3/V_M and 3/A combinations instead may be supplied factory filled with long-life synthetic lubricant, depending on their frame size, as indicated in the Use and Maintenance Manual (available at www.bonfiglioli.com).
– It is possible, however, for all sizes of gearboxes,to request the supply with the following types of oil, selectable in accordance with what is defined in the table.

LUBRICATION	TYPE	DESIGNATION	SUPPLIER
LH	Polyglycol (PAG)	OMALA S4 WE 150	Shell
LM	Polyglycol (PAG)	OMALA S4 WE 320	

NOTE - The applicability of lubrication option is valid for all configurations except for hydraulic inputs.

– The oil capacities listed for the various types of unit are indicative only. Fill the gearbox up to the level plug, located as per the mounting position specified when ordering to ensure the gearbox is properly filled.
– Should transmitted power exceed the thermal capacity of the unit a supplementary cooling unit must be provided (see: Supplementary cooling systems).

NOTE - Combined gearboxes and gearmotors feature separate lubrication for planetary stages and for worm gearboxes (3/V_M) or helical bevel units (3/A).

16.3 Brakes lubrification

The hydraulically operated multidisc brakes are lubricated by the same oil as the gearbox.

17 STORAGE

Observe the following instructions to ensure correct storage of delivered products:

a) Do not store outdoors, in areas exposed to weather or with excessive humidity.
b) Always place boards, wood, or other material between the products and the floor.
The gearbox should not have direct contact with the floor.
c) For storage periods of over 60 days, all machined surfaces such as flanges, shafts and couplings must be protected with a suitable anti-oxidation product.
d) When units are expected to be in storage for more than 6 months, the following extra measures are required:
- Smear all machined parts with grease to prevent oxidation.
- Place the gearbox so that the breather plug is uppermost and fill it with oil (this does not apply to life-lubricated gearboxes). Before the gearbox is put into operation, the appropriate type and quantity of oil should be restored.

18 SUPPLY CONDITIONS

Gearboxes are supplied as follows:

a) arranged for installation in the mounting position specified in the purchase order;
b) Unlubricated. Inner parts are protected by a film of the oil used for testing purpose;
c) when no specific protection class is requested, the surfaces of gearboxes are protected to at least corrosivity class C2 (UNI EN ISO 12944-2), realized with a grey antioxidant water-based primer Ral 7042. Mating surface are not coated.
d) tested to factory specifications;
e) suitably packed;
f) complete with mounting hardware for IEC electric or hydrauilc motors;
g) gearboxes lubricated “for life” are factory filled with oil.

3 11M L 2 16.7 NHC

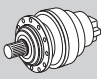

OUTPUT VERSION

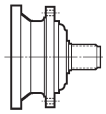

MZ: Splined male shaft

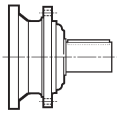

MC: Solid keyed shaft

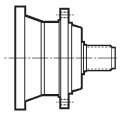

HZ: Heavy duty splined male shaft

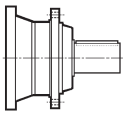

HC / NHC: Heavy duty solid keyed shaft

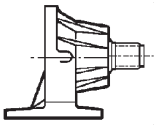

PZ: Foot base with splined shaft

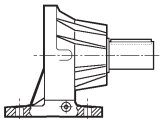

PC / NPC: Foot base with solid keyed shaft

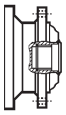

FZ / FZB: Hollow splined shaft

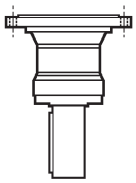

VK: Reinforced output with heavy duty keyed shaft for stirrers and mixer

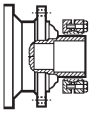

FP: Hollow shaft for shrink disc

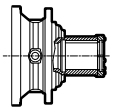

FDK: Hollow shaft with double keyway

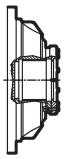

FZP: Hollow splined shaft with axial blockage device (recommended for shaft mounted installation)

Reduction ratio

Fill in the value of the transm. ratio (including point and decimals) reported in the selection charts

Es. : 1/5.33 = 5.33 1/44.6 = 44.6 1/131 = 131

No. OF REDUCTIONS

1, 2, 3, 4

DESIGN

L = Linear

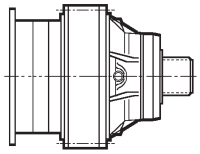

R = Right angle

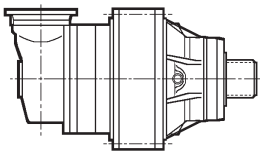

GEARBOX SIZE

00 = 300	235	**05** = 305	303	**10M** = 310	373	**15M** = 315	443	**19** = 319	495
01 = 301	251	**06** = 306	321	**11M** = 311	391	**16M** = 316	459	**21** = 321	507
03 = 303	267	**07** = 307	339	**13M** = 313	409	**17M** = 317	471	**23** = 323	519
04 = 304	285	**09** = 309	357	**14M** = 314	427	**18M** = 318	483	**25** = 325	523

SERIES

6A N320TC A A W0A ... ...

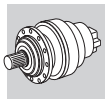

OPTIONS

GASKET
STANDARD = NBR
PV = Fluoro elastomer
(Hydraulic inputs BONFIGLIOLI TECHNICAL SERVICE)

LUBRICATION
LM (SHELL OMALA S4 WE 320)
LH (SHELL OMALA S4 WE 150)
(Hydraulic inputs BONFIGLIOLI TECHNICAL SERVICE)

SURFACE PROTECTION
C2 (default)**, C3, C4** 43

CERTIFICATES
AC, CC 45

ONLY FOR RIGHT ANGLE DESIGN
preferential input direction of rotation

RA = left
RO = right

PAINTING
RAL7042 (default)**, RAL5010, RAL9005, RAL9006, RAL9010** 43

SUPPLEMENTARY COOLING SYSTEM
CR1, CR2, CR3 26

OUTPUT FITTINGS

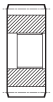

P... = Pinions **B0A =** Splined bar **M0A =** Sleeve coupling **G0A =** Shrink disc **W0A =** Flange

MOTOR FLANGE ORIENTATION 532

MOUNTING POSITION 45

INPUT

Without motor adaptor

V9AA	V9AC	V9AE	V9AG	V9AL
V9AB	V9AD	V9AF	V9AH	

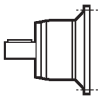

Input keyed shaft

	V01A	V01B	V05B	V06B	V07A	V07B	V10B	V11B	V15B
diam. [mm]	*Ø24*	*Ø38*	*Ø48*	*Ø60*	*Ø60*	*Ø80*	*Ø80*	*Ø80*	*Ø120*

	NV01A	NV01B	NV05B	NV06B	NV07A	NV07B	NV10B	NV11B
diam. [ins]	Ø1.125	Ø1.165	Ø1.875	Ø2.375	Ø2.375	Ø3.000	Ø3.000	Ø3.000

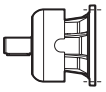

Solid input shaft with fan

	FV05B	FV06B	FV07A	FV07B	FV10B	FV11B
diam. [mm]	*Ø48*	*Ø60*	*Ø60*	*Ø80*	*Ø80*	*Ø80*

	FNV05B	FNV06B	FNV07A	FNV07B	FNV10B	FNV11B
diam. [ins]	Ø1.875	Ø2.375	Ø3.000	Ø3.000	Ø3.000	Ø3.000

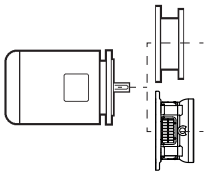

Electric motor connection
P+IEC (P71...P250), **NEMA** (N56TC...N400TC)

Electric motor connection with integrated fan

PF160	PF180	PF200	PF225	PF250
PF N250TC	PF N280TC	PF N320TC	PF N360TC	PF N400TC

For R execution and for T, V mounting position BONFIGLIOLI TECHNICAL SERVICE 27

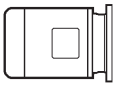

Integrated gearmotor with in-built compact electric motor (available up to size 307) **S2, S3, S4**

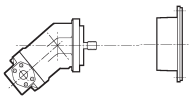

Hydraulic Motor connection with mounting flange European version
For US version mounting flange BONFIGLIOLI TECHNICAL SERVICE **S5AP, COAA, HOBA, ...** 532
(PV-LM-LH options BONFIGLIOLI TECHNICAL SERVICE)

Hydraulic motor MG
(PV-LM-LH options BONFIGLIOLI TECHNICAL SERVICE) 542

ONLY WITH HYDRAULIC MOTOR ADAPTOR

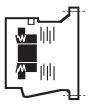

Standard negative multidisc brake

6 = Type : **4, 5, 6**
A = Braking torque : **A, B, C, ...** 531

Negative multidisc brake for MG hydraulic motor
SF = Without brake 548

3/V 05 L 3 614 NPC

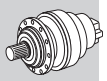

OUTPUT VERSION

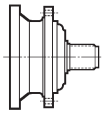

MZ: Splined male shaft

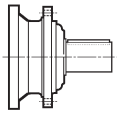

MC: Solid keyed shaft

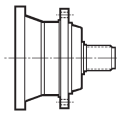

HZ: Heavy duty splined male shaft

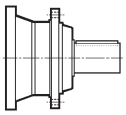

HC / NHC: Heavy duty solid keyed shaft

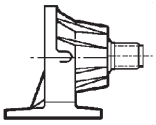

PZ: Foot base with splined shaft

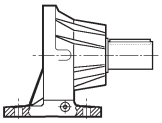

PC / NPC: Foot base with solid keyed shaft

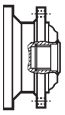

FZ / FZB: Hollow splined shaft

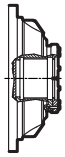

FZP: Hollow splined shaft with axial blockage device (recommended for shaft mounted installation)

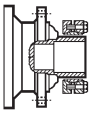

FP: Hollow shaft for shrink disc

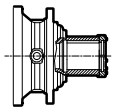

FDK: Hollow shaft with double keyway

REDUCTION RATIO
Fill in the value of the transm. ratio reported in the selection charts
Es. : 1/773 = 773

No. OF REDUCTIONS
3, 4

DESIGN
L = Combined 300M unit,
2 or 3 planetary stages + worm gear units

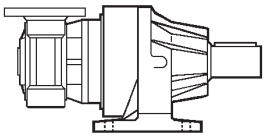

GEARBOX SIZE

00 = 3/V 00	241	**05** = 3/V 05	309	**10M** = 3/V 10	379	**15M** = 3/V 15	449	**19** = 3/V 19	499
01 = 3/V 01	257	**06** = 3/V 06	327	**11M** = 3/V 11	397	**16M** = 3/V 16	463	**21** = 3/V 21	511
03 = 3/V 03	273	**07** = 3/V 07	345	**13M** = 3/V 13	415	**17M** = 3/V 17	475		
04 = 3/V 04	291	**09** = 3/V 09	363	**14M** = 3/V 14	433	**18M** = 3/V 18	487		

SERIES
Combined 300M gearboxes / Worm gear units

N140TC B5 AF W0A ...

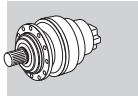

OPTIONS

GASKET
STANDARD = NBR
PV = Fluoro elastomer

SURFACE PROTECTION
C2 (default)**, C3, C4**

43

PAINTING
RAL7042 (default)**, RAL5010, RAL9005, RAL9006, RAL9010**

43

CERTIFICATES
AC, CC

45

OUTPUT FITTINGS

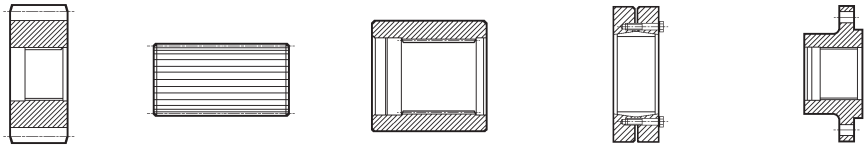

P... = Pinions **B0A =** Splined bar **M0A =** Sleeve coupling **G0A =** Shrink disc **W0A =** Flange

MOUNTING POSITION

45

DESIGN
B5, B14

INPUT

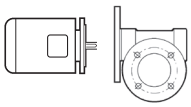

Electric motor connection **P+IEC** (P63...P180), **NEMA** (N56TC...N210TC)

Input keyed shaft **HS, NHS**

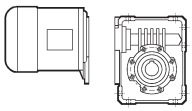

Integrated gearmotor with in-built compact electric motor **S1, S2, S3**

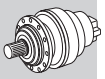

3/A 06 L 2 69.9 NPC

OUTPUT VERSION

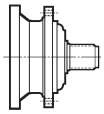

MZ: Splined male shaft

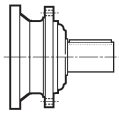

MC: Solid keyed shaft

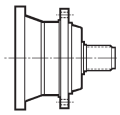

HZ: Heavy duty splined male shaft

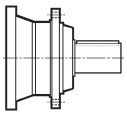

HC / NHC: Heavy duty solid keyed shaft

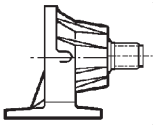

PZ: Foot base with splined shaft

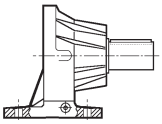

PC / NPC: Foot base with solid keyed shaft

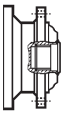

FZ: Hollow splined shaft

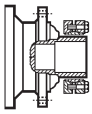

FP: Hollow shaft for shrink disc

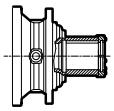

FDK: Hollow shaft with double keyway

REDUCTION RATIO
Fill in the value of the transm. ratio reported in the selection charts
Es. : 1/19.4 = 19.4 1/175 = 175

No. OF REDUCTIONS
2

DESIGN
L = Combined 300M unit,
1 planetary stages + A helical bevel units

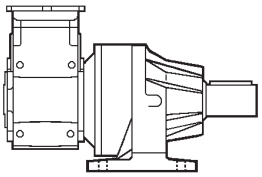

GEARBOX SIZE

00 = 3/A 00 (300+A10)	243	**05 =** 3/A 05 (305+A41)	311
01 = 3/A 01 (301+A20)	259	**06 =** 3/A 06 (306+A50)	329
03 = 3/A 03 (303+A30)	275	**07 =** 3/A 07 (307+A60)	347
04 = 3/A 04 (304+A41)	293		

SERIES
Combined 300M gearboxes / A series helical bevel gear units

N180TC EF W0A ...

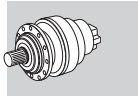

OPTIONS

GASKET
STANDARD = NBR
PV = Fluoro elastomer

SURFACE PROTECTION
C2 (default)**, C3, C4**

43

PAINTING
RAL7042 (default)**, RAL5010, RAL9005, RAL9006, RAL9010**

43

CERTIFICATES
AC, CC

45

OUTPUT FITTINGS

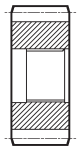

P... = Pinions

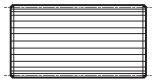

B0A = Splined bar

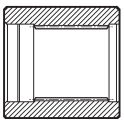

M0A = Sleeve coupling

G0A = Shrink disc

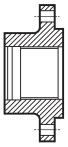

W0A = Flange

MOUNTING POSITION

45

INPUT

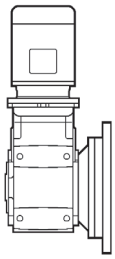

Integrated gearmotor with in-built compact electric motor **S2, S3, S4**

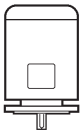

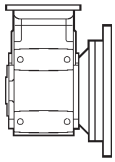

Electric motor connection **P+IEC** (P63...P180), **NEMA** (N56C...N280TC)

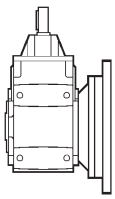

Input keyed shaft **HS, NHS**

22 MOTOR DESIGNATION

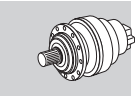

MOTOR | BRAKE

M 1LA 4 230/400-50 IP54 CLF ... **W** | **FD** 7.5 R SB 220 SA ...

OPTIONS

BRAKE SUPPLY

RECTIFIER TYPE
NB, SB, NBR, SBR

BRAKE HAND RELEASE
R, RM

BRAKE TORQUE (specify Nm!)
[**1 ft•lb = 1.356 Nm**]

BRAKE TYPE
FD (d.c. brake)
FA (a.c. brake)

TERMINAL BOX POSITION
W (default)**, N, E, S**

MOTOR MOUNTING
— (compact motor)
B5 (IEC - motor)

INSULATION CLASS
CL F standard
CL H option

DEGREE OF PROTECTION
IP55 standard (IP54 - brake motor)

VOLTAGE - FREQUENCY

POLE NUMBER
4, 6, 2/4, 2/6, 2/8, 2/12

MOTOR SIZE
1SD - 5LA (compact motor)
63A - 250M (IEC motor)

MOTOR TYPE
M = compact 3-phase **ME** = compact 3-phase, class IE2 **MX** = compact 3-phase, class IE3
BN = IEC 3-phase **BE** = IEC 3-phase, class IE2 **BX** = IEC 3-phase, class IE3

NEMA motors to be specified thru their ordering numbers

23 ADDITIONAL OPTIONS

23.1 SURFACE PROTECTION

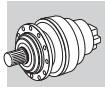

When no specific protection class is requested, the surfaces of gearboxes are protected to at least corrosivity class C2 (UNI EN ISO 12944-2). For improved resistance to atmospheric corrosion, gearboxes can be delivered with C3 and C4 surface protection, obtained by painting the complete gearbox.

SURFACE PROTECTION	Typical environments	Maximum surface temperature	Corrosivity class according to UNI EN ISO 12944-2
C3	Urban and industrial environments with up to 100% relative humidity (medium air pollution)	120°C [248 F°]	C3
C4	Industrial areas, coastal areas, chemical plant, with up to 100% relative humidity (high air pollution)	120°C [248 F°]	C4

Gearboxes with optional protection to class C3 or C4 are available in a choice of colours.
If no specific colour is requested (see the “PAINTING” option) gearboxes are finished in RAL 7042.
Gearboxes can also be supplied with surface protection for corrosivity class C5 according to UNI EN ISO 12944-2. Contact our Technical Service for further details.

23.2 PAINTING

Gearboxes with optional protection to class C3 or C4 are available in the colours listed in the following table.

PAINTING	Farbe	RAL number
RAL7042*	Traffik Grey A	7042
RAL5010	Gentian Blue	5010
RAL9005	Jet Black	9005
RAL9006	White Aluminium	9006
RAL9010	Pure White	9010
RAL7035	Light Grey	7035
RAL7001	Silver Grey	7001
RAL5015	Sky Blue	5015
RAL7037	Dusty Grey	7037
RAL5024	Pastel Blue	5024

* Gearboxes are supplied in this standard colour if no other colour is specified.

NOTE – “PAINTING” options can only be specified in conjunction with “SURFACE PROTECTION” options.

23.3 LONG TERM STOCK

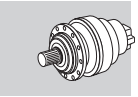

In presence of the Long Term Stock option the configured product is supplied without the standard lubricant oil but with an anticorrosive protective liquid to grant the integrity and full functionality of the gear unit in those cases where the unit will not be installed immediately but it has to be stocked for a long period of time (installation later than 6 months from delivery).
The warranty conditions are valid 12 months from commissioning (with commissioning within 24 months from delivery) or 24 months from delivery without commissioning.
After 2 years of stock, the unit with the Long Term Stock option needs to be checked by Bonfiglioli assistance center. In case of a product that is not properly preserved, an offer by Bonfiglioli will be issued for a complete restore.
With the recovery activity successfully concluded, the warranty conditions restart from the 12 months of commissioning (with commissioning within 24 months from restore date) or 24 months from restore date

Gearbox size	Applicability of Long Term Stock option
300 ... 321	**SLM, SLP**

Applicability of the Long Term Stock option:

The Long Term Stock option can be requested in 2 versions:

- **SLM Long Term Stock_Mineral Oil**: option having anti-corrosive protective oil compatible with all mineral-based oil lubricants listed in the “Installation, operation and maintenance” Bonfiglioli manual.
- **SLP Long Term Stock_Polyglycol Oil**: option having anti-corrosive protective oil compatible with all polyglycol-based oil lubricants listed in the “Installation, operation and maintenance” Bonfiglioli manual.

Note: only one version can be selected. SLM and SLP can’t coexist.
When configuring a gear unit or gearmotor with the Long Term Stock option, it is necessary to know the type of lubricating oil that will be used by the customer during the operating period (mineral or polyglycol oil). Before commissioning a Bonfiglioli product with this option, make sure that the lubricating oil filling activity takes place through the specific filling plug determined by the mounting position indicated on the plate.
With regards to gear units with lifetime lubrication (see table below), the quantity of lubricating oil to top up is not indicated in the relevant “installation, use and maintenance” Bonfiglioli manual. In this case, if the Long Term Stock option is active, it is therefore necessary to contact the Bonfiglioli assistance center to receive this information.

Gearbox size	Lubricant charge quantity
300 ... 321	

23.4 CERTIFICATES

AC - Certificate of compliance
The document certifies the compliance of the product with the purchase order and the construction in conformity with the applicable procedures of the Bonfiglioli Quality System.

CC - Inspection certificate
The document entails checking on order compliance, the visual inspection of external conditions and of mating dimensions. Checking on main functional parameters in unloaded conditions is also performed along with oil seal proofing, both in static and in running conditions. Units inspected are sampled within the shipping batch and marked individually.

23.5 TACONITE SEALS

Taconite seals are recommended for environments characterised by the presence of abrasive dust or powders. Taconite seals incorporate a combination of sealing rings, labyrinths and a grease chamber. This option is available for **FP** and **FZ** version from size 314 to 325.
For detailed information please contact our Technical Service.

24 MOUNTING POSITION

The product designation is only complete when the mounting position is also specified. Please refer to table (A17) for in-line gear units and to (A18) for right angle drives.

For gearboxes size 323-325 in O/T mounting position BONFIGLIOLI TECHNICAL SERVICE

24.1 In-line units

(A 17)

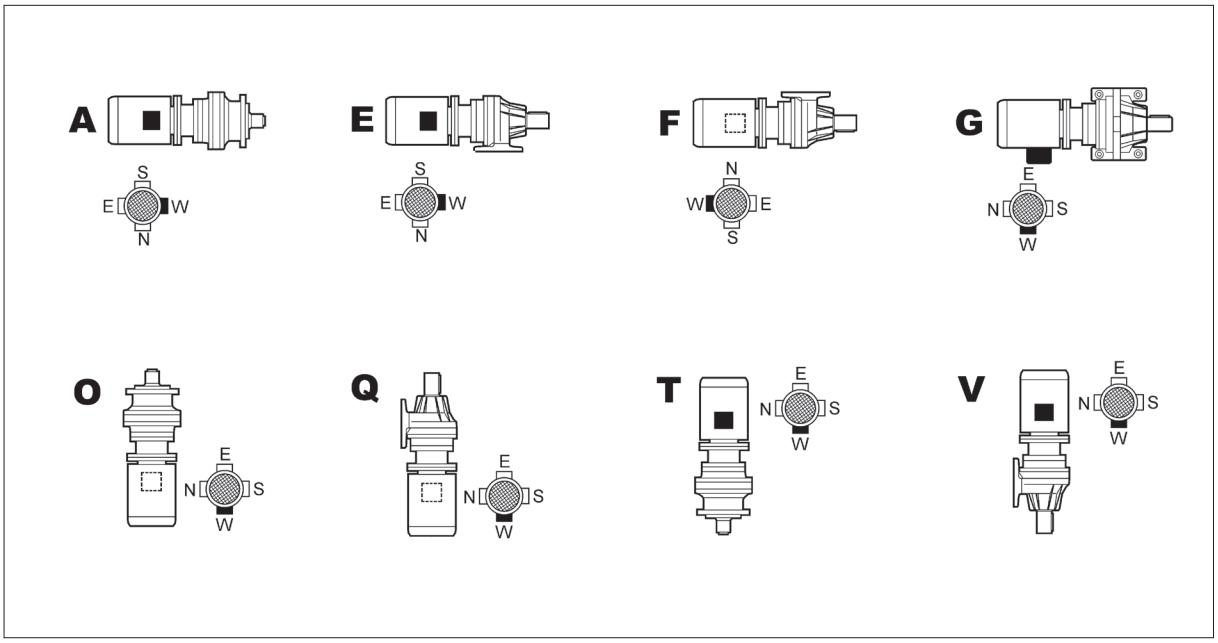

24.2 Right angle units

(A 18)

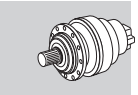

B0 - B1 - B2 - B3

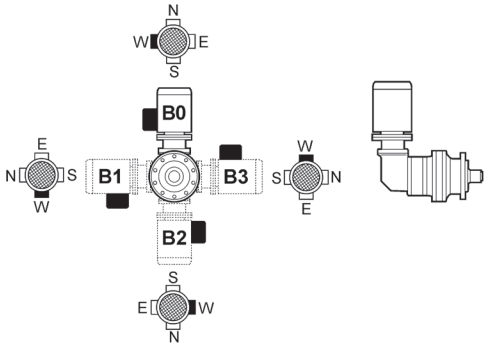

I0 - I1 - I2 - I3

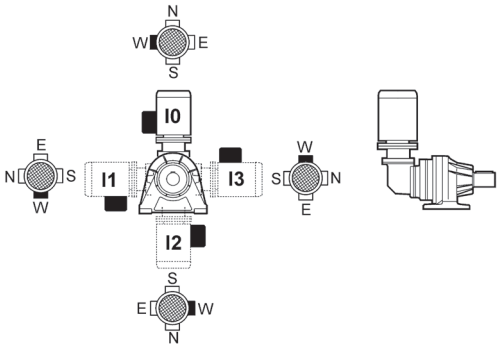

J0 - J1 - J2 - J3

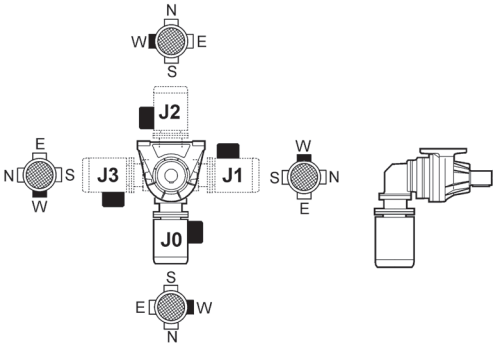

M0 - M1 - M2 - M3

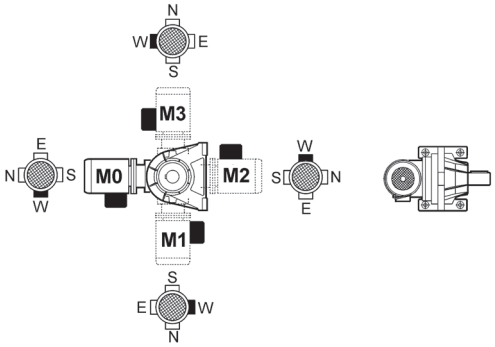

P0 - P1 - P2 - P3

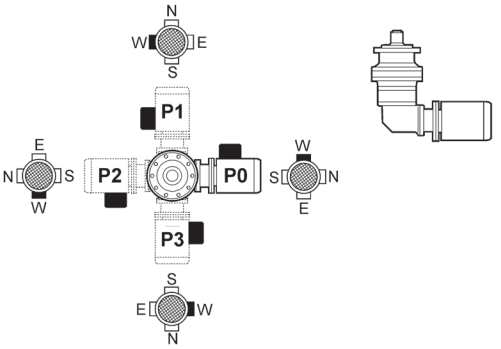

R0 - R1 - R2 - R3

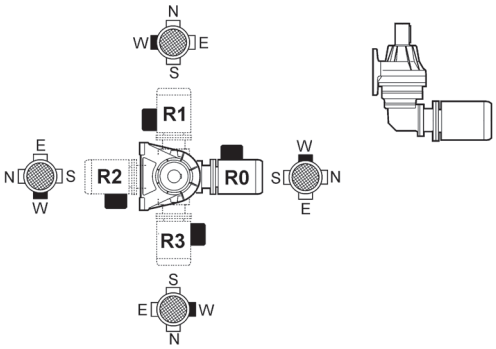

U0 - U1 - U2 - U3

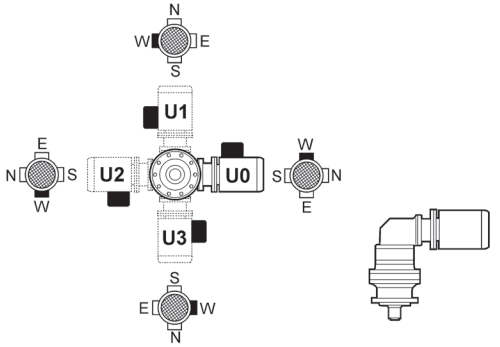

W0 - W1 - W2 - W3

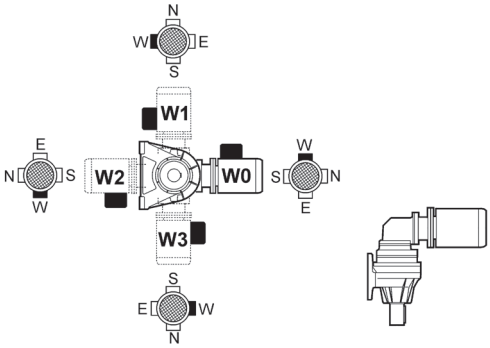

24.3 3/V_M Series

(A 19)

AA - AE - AF - AD

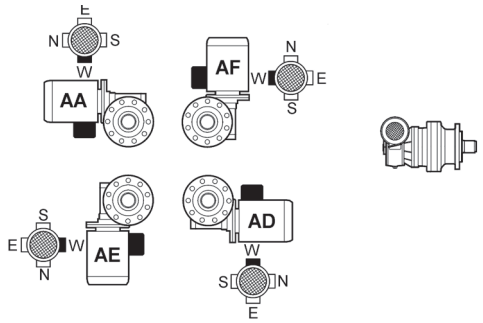

EA - EE - EF - ED

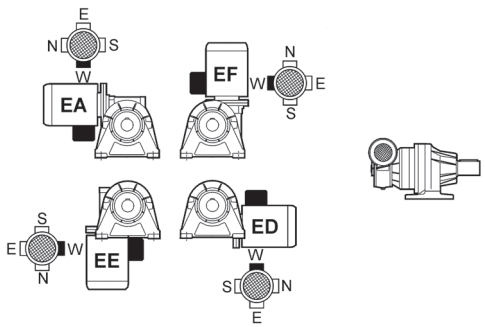

TA - TE - TF - TD

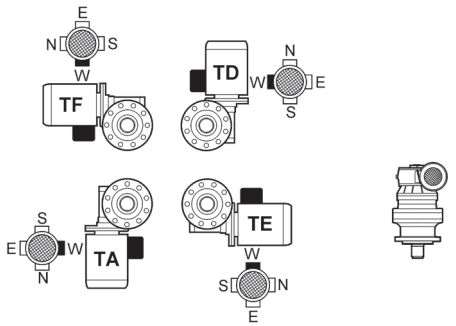

VA - VE - VF - VD

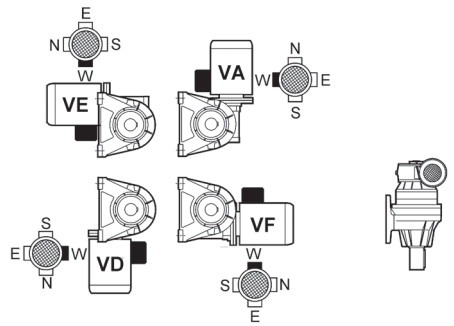

OA - OE - OF - OD

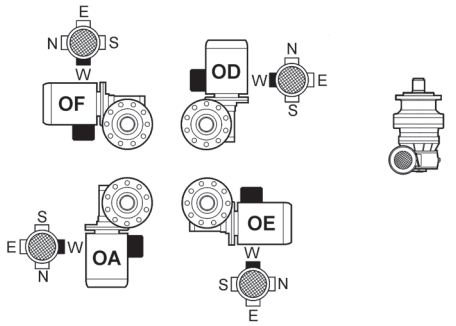

QA - QE - QF - QD

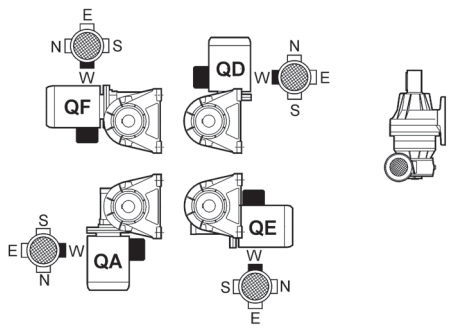

FA - FE - FF - FD

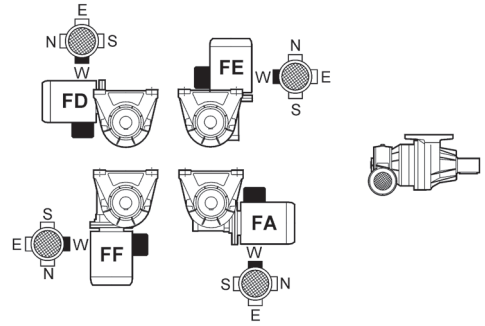

24.4 3/A Series

(A 20)

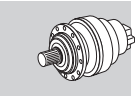

AA - AE - AF - AD

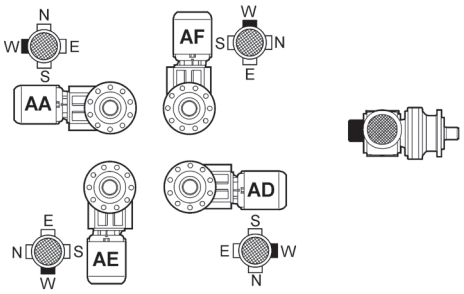

EA - EE - EF - ED

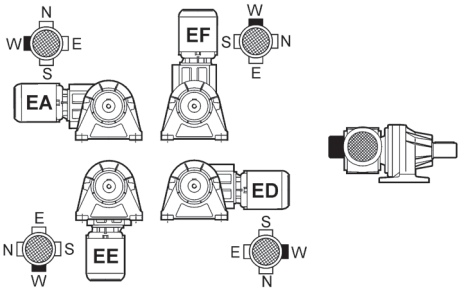

TA - TE - TF - TD

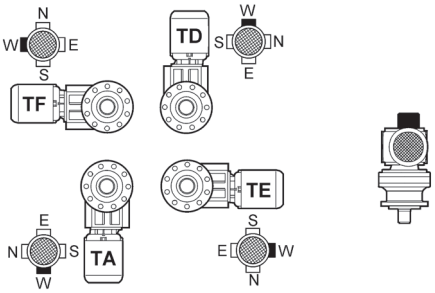

VA - VE - VF - VD

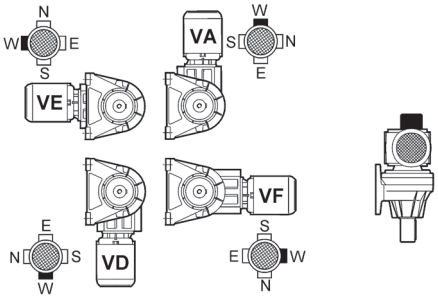

OA - OE - OF - OD

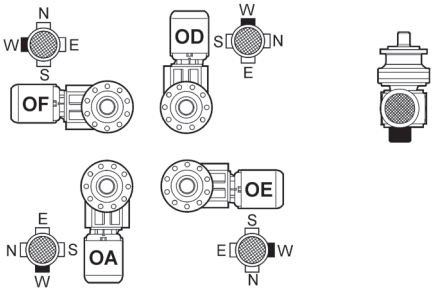

QA - QE - QF - QD

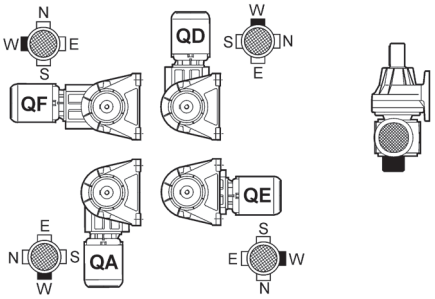

FA - FE - FF - FD

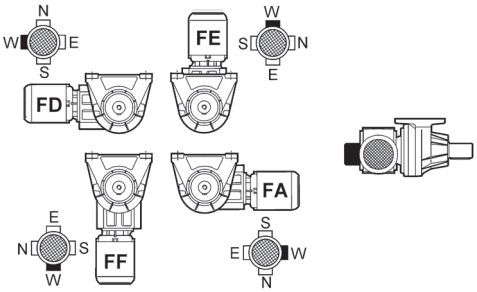

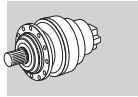

25 RATING CHARTS

A GEARMOTOR SELECTION BY POWER

B GEARBOX SELECTION BY APPLICATION TORQUE

C GEARBOX SELECTION BY NUMBER OF WORKING CYCLES

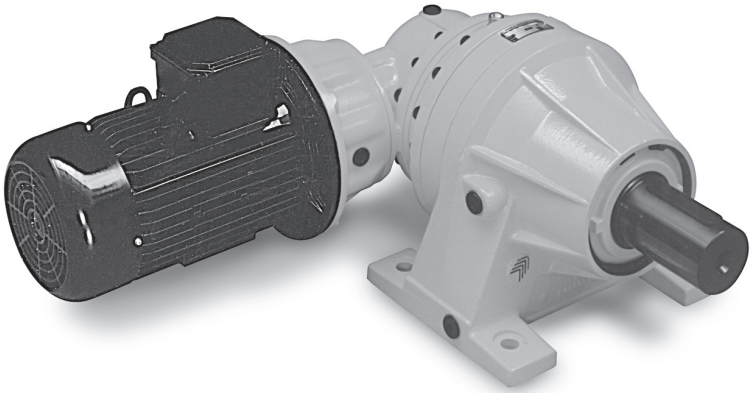

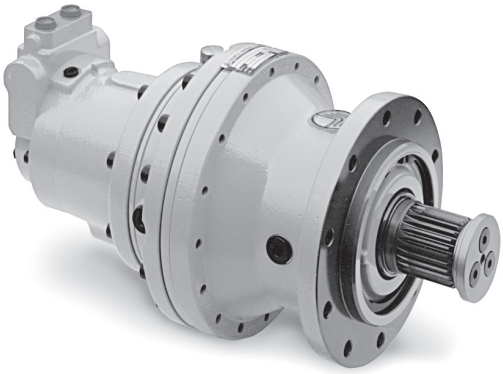

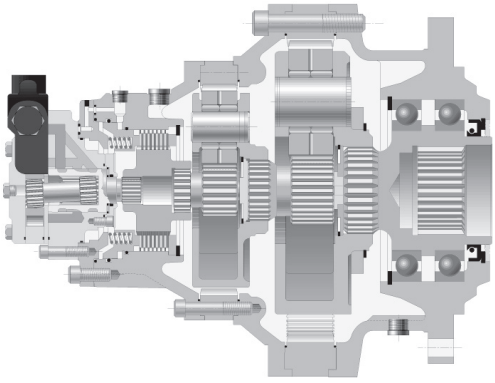

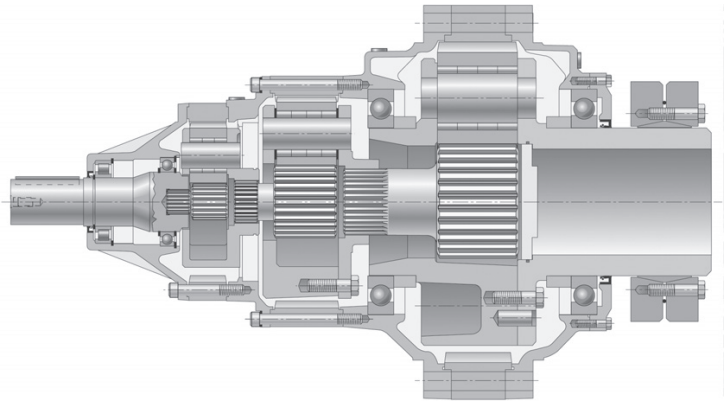

25.1 300ML - 300MR GEARMOTOR RATING CHARTS

Reading the rating chart.

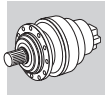

P_1 = 20 hp

n_2 rpm	T_2 lb•in	S	i			IE2	IE3	IE2	IE3	NEMA	Rn_2 [lbs] NHC/HC NPC/PC	HZ/PZ	FZ
0.94	1,199,700	1.1	1893	**317ML4**		**BE160L4**	**BX160L4**	**ME5LA4**	**MX5LA4**	**N250TC**	89,800	95,400	33,700
1.1	984,400	1.1	1553	**316ML4**		**BE160L4**	**BX160L4**	**ME5LA4**	**MX5LA4**	**N250TC**	56,100	62,900	32,300
1.1	1,010,900	1.4	1595	**317ML4**		**BE160L4**	**BX160L4**	**ME5LA4**	**MX5LA4**	**N250TC**	87,600	93,100	32,600
1.3	835,600	1.7	1318	**317ML4**		**BE160L4**	**BX160L4**	**ME5LA4**	**MX5LA4**	**N250TC**	85,300	90,600	30,600
31.4	813,700	1.0	1284	**315ML4**		**BE160L4**	**BX160L4**	**ME5LA4**	**MX5LA4**	**N250TC**	35,000	42,800	18,200

1 2 3 4 5 6 7 8 9 10 11

Thermal capacity lower than power applied

1	Rating of electric motor connected to the gearbox
2	Gearbox output speed
3	Rated torque to the output shaft based on: - specified service factor - 10000 h theoretical lifetime
4	Service factor
5	Gear ratio
6	Frame size of the in-line gear unit
7	Frame size of the right-angle gear unit. NOTE: letters (B) (C) near size indication identify different angle reduction dimensions. See dimensions pages.
8	IEC motor size and pole number
9	Integral motor frame size and pole number
10	NEMA motor size
11	Permitted overhung loading on output shaft, based on: - service factor f_S=1 - 10000 h theoretical lifetime - speed of output n_2 For forces not applied at shaft middlepoint, see diagrams provided in the specific gearbox overall dimensioning pages

Index with reference to the size page.
Gearmotor sizes refer to combinations with BONFIGLIOLI-manufactured motors

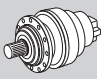

A

300 L		235
300 R		237
301L		251
301R		253
303 L		267
303 R		269
303 VK		283
304 L		285
304 R		287
304 VK		301
305 L		303
305 R		305
305 VK		319
306 L		321
306 R		323
306 VK		337

307 L		339
307 R		341
307 VK		355
309 L		357
309 R		359
309 VK		371
310M L		373
310M R		375
310M VK		389
311M L		391
311M R		393
311M VK		407
313M L		409
313M R		411
313M VK		425
314M L		427
314M R		429
314M VK		441

315M L		443
315M R		445
315M VK		457
316M L		459
316M R		461
317M L		471
317M R		473
318M L		483
318M R		485
319 L		495
319 R		497
321 L		507
321 R		509
323 L		519
325 L		523

The selection of motors without brake takes into account the requirements of Regulation EC 640/2009 (see section **M** of this catalogue). When the motor rated power is below 0.75kW (1HP), BN/M motors can be provided.
Considering that the Regulation EC 640/2009 shall not apply to the motors equipped with brake, the brakemotor selection takes into account BN/M motors only, without taking into account the rated power. BX, BE, MX and ME brakemotors are available on request.

P_1 = 0.33 hp

n_2 rpm	T_2 lb•in	S	i			IE1	IE1	NEMA	Rn_2 [lbs] NHC/HC NPC/PC	HZ/PZ	FZ
0.57	32,700	1.9	2916	**306L4**		**BN71A4**		**N56C**	16,000	20,200	7,870
0.60	31,400	1.1	2799	**305L4**		**BN71A4**		**N56C**	11,600	14,600	5,400
0.68	27,500	1.0	2375	**304L4**		**BN71A4**		**N56C**	11,400	14,300	5,400
0.71	26,200	2.4	2337	**306L4**		**BN71A4**		**N56C**	15,500	19,500	7,870
0.74	25,400	1.0	2269	**304L4**		**BN71A4**		**N56C**	11,200	14,200	5,400
0.74	25,100	1.3	2243	**305L4**		**BN71A4**		**N56C**	11,200	14,200	5,400
0.81	23,200	2.7	2074	**306L4**		**BN71A4**		**N56C**	15,200	19,200	7,870
0.84	22,300	1.1	1991	**303L4**		**BN71A4**		**N56C**	11,000	13,900	5,400
0.84	22,300	1.5	1991	**304L4**		**BN71A4**		**N56C**	11,000	13,900	5,400
0.84	22,300	2.2	1991	**305L4**		**BN71A4**		**N56C**	11,000	13,900	5,400
0.90	20,800	1.0	1854	**303L4**		**BN71A4**		**N56C**	10,900	13,800	5,400
0.90	20,800	2.0	1854	**305L4**		**BN71A4**		**N56C**	10,900	13,800	5,400
0.92	20,300	1.3	1815	**304L4**		**BN71A4**		**N56C**	10,900	13,700	5,400
1.0	17,800	1.0	1591	**301L4**		**BN71A4**		**N56C**	5,560	6,600	1,770
1.1	17,800	1.1	1586	**303L4**		**BN71A4**		**N56C**	10,700	13,500	5,300
1.1	17,800	2.0	1586	**304L4**		**BN71A4**		**N56C**	10,700	13,500	5,300
1.1	17,800	2.4	1586	**305L4**		**BN71A4**		**N56C**	10,700	13,500	5,300
1.2	15,500	1.0	1383	**301L4**		**BN71A4**		**N56C**	5,450	6,470	1,690
1.2	15,300	1.4	1370	**303L4**		**BN71A4**		**N56C**	10,500	13,200	5,050
1.2	15,100	2.2	1344	**304L4**		**BN71A4**		**N56C**	10,400	13,200	5,020
1.2	15,300	2.6	1370	**305L4**		**BN71A4**		**N56C**	10,500	13,200	5,050
1.3	14,300	1.5	1275	**301L4**		**BN71A4**		**N56C**	5,390	6,400	1,640
1.3	14,300	1.7	1278	**303L4**		**BN71A4**		**N56C**	10,300	13,100	4,940
1.3	14,200	2.4	1271	**304L4**		**BN71A4**		**N56C**	10,300	13,100	4,930
1.4	13,000	1.9	1164	**304L4**		**BN71A4**		**N56C**	10,200	12,900	4,780
1.5	12,400	1.1	1108	**301L4**		**BN71A4**		**N56C**	5,280	6,270	1,570
1.5	12,300	1.6	1098	**303L4**		**BN71A4**		**N56C**	10,100	12,800	4,690
1.6	11,400	1.8	1022	**301L4**		**BN71A4**		**N56C**	5,220	6,200	1,530
1.6	11,400	2.1	1018	**303L4**		**BN71A4**		**N56C**	10,000	12,700	4,580
1.6	11,400	3.0	1018	**304L4**		**BN71A4**		**N56C**	10,000	12,700	4,580
1.8	10,600	1.0	942	**300L4**		**BN71A4**		**N56C**	5,160	6,520	1,490
1.8	10,600	1.9	942	**301L4**		**BN71A4**		**N56C**	5,160	6,130	1,490
1.9	10,000	1.9	896	**303L4**		**BN71A4**		**N56C**	9,840	12,400	4,380
2.0	9,170	1.1	819	**300L4**		**BN71A4**		**N56C**	5,060	6,390	1,420
2.0	9,170	2.1	819	**301L4**		**BN71A4**		**N56C**	5,060	6,000	1,420
2.0	9,140	2.6	816	**303L4**		**BN71A4**		**N56C**	9,710	12,300	4,250
2.0	9,230	2.1	824		**303R4**	**BN71A4**		**N56C**	9,720	12,300	4,260
2.1	8,930	1.8	797		**303R4**	**BN71A4**		**N56C**	9,670	12,200	4,220
2.2	8,460	1.1	755	**300L4**		**BN71A4**		**N56C**	5,000	6,310	1,380
2.2	8,460	2.3	755	**301L4**		**BN71A4**		**N56C**	5,000	5,940	1,380
2.2	8,580	1.5	766		**301R4**	**BN71A4**		**N56C**	5,010	5,950	1,390
2.3	8,040	2.3	718	**303L4**		**BN71A4**		**N56C**	9,530	12,000	4,070
2.4	7,860	2.9	702	**304L4**		**BN71A4**		**N56C**	9,500	12,000	4,040
2.4	7,830	2.9	699		**304R4**	**BN71A4**		**N56C**	9,490	12,000	4,040
2.5	7,380	2.5	659		**303R4**	**BN71A4**		**N56C**	9,410	11,900	3,960
2.6	7,270	2.8	649	**303L4**		**BN71A4**		**N56C**	9,390	11,900	3,940
2.7	6,900	1.4	616	**300L4**		**BN71A4**		**N56C**	4,860	6,130	1,290
2.7	6,870	0.9	613		**300R4**	**BN71A4**		**N56C**	4,850	6,130	1,290

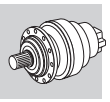

A

P_1 = 0.33 hp

n_2 rpm	T_2 lb•in	S	i			IE1	IE1	NEMA	Rn_2 [lbs] NHC/HC NPC/PC	HZ/PZ	FZ
2.7	6,900	2.7	616	**301L4**		**BN71A4**		**N56C**	4,860	5,770	1,290
2.7	6,870	1.9	613		**301R4**	**BN71A4**		**N56C**	4,850	5,760	1,290
3.0	6,250	1.5	558	**300L4**		**BN71A4**		**N56C**	4,790	6,050	1,250
3.0	6,250	2.9	558	**301L4**		**BN71A4**		**N56C**	4,790	5,680	1,250
3.2	5,910	3.0	528		**303R4**	**BN71A4**		**N56C**	9,120	11,500	3,680
3.4	5,530	1.6	494	**300L4**		**BN71A4**		**N56C**	4,710	5,940	1,200
3.4	5,500	1.1	491		**300R4**	**BN71A4**		**N56C**	4,700	5,940	1,200
3.4	5,500	2.2	491		**301R4**	**BN71A4**		**N56C**	4,700	5,580	1,200
3.7	5,010	1.8	447	**300L4**		**BN71A4**		**N56C**	4,640	5,860	1,160
3.7	5,070	1.7	453		**300R4**	**BN71A4**		**N56C**	4,650	5,870	1,160
4.1	4,510	1.3	403	**300L4**		**BN71A4**		**N56C**	4,570	5,770	1,120
4.1	4,510	2.6	403	**301L4**		**BN71A4**		**N56C**	4,570	5,430	1,120
4.2	4,410	1.3	394		**300R4**	**BN71A4**		**N56C**	4,560	5,750	1,110
4.2	4,410	2.7	394		**301R4**	**BN71A4**		**N56C**	4,560	5,410	1,110
4.5	4,320	1.4	374	**300L3**		**BN71A4**		**N56C**	4,520	5,710	1,090
4.5	4,320	2.7	374	**301L3**		**BN71A4**		**N56C**	4,520	5,370	1,090
4.6	4,070	2.1	363		**300R4**	**BN71A4**		**N56C**	4,500	5,690	1,080
5.1	3,700	2.3	330	**300L4**		**BN71A4**		**N56C**	4,450	5,620	1,050
5.6	3,450	1.7	299	**300L3**		**BN71A4**		**N56C**	4,450	5,620	1,010
5.7	3,260	2.5	291		**300R4**	**BN71A4**		**N56C**	4,450	5,620	1,000
6.2	3,000	2.7	268		**300R4**	**BN71A4**		**N56C**	4,450	5,620	980
7.0	2,770	2.1	240	**300L3**		**BN71A4**		**N56C**	4,450	5,620	940
7.0	2,660	2.2	237		**300R4**	**BN71A4**		**N56C**	4,450	5,620	940
8.7	2,220	2.6	192	**300L3**		**BN71A4**		**N56C**	4,450	5,620	870

P_1 = 0.5 hp

n_2 rpm	T_2 lb•in	S	i			IE1	IE1	NEMA	Rn_2 [lbs] NHC/HC NPC/PC	HZ/PZ	FZ
0.58	47,500	1.3	2916	**306L4**		**BN71B4**	**M1SD4**	**N56C**	16,000	20,100	7,870
0.70	39,500	2.5	2423	**307L4**		**BN71B4**	**M1SD4**	**N56C**	19,400	26,400	10,100
0.73	38,100	1.6	2337	**306L4**		**BN71B4**	**M1SD4**	**N56C**	15,500	19,500	7,870
0.76	36,500	0.9	2243	**305L4**		**BN71B4**	**M1SD4**	**N56C**	11,200	14,100	5,400
0.82	33,800	1.8	2074	**306L4**		**BN71B4**	**M1SD4**	**N56C**	15,200	19,200	7,870
0.85	32,400	1.0	1991	**304L4**		**BN71B4**	**M1SD4**	**N56C**	11,000	13,900	5,400
0.85	32,400	1.5	1991	**305L4**		**BN71B4**	**M1SD4**	**N56C**	11,000	13,900	5,400
0.92	30,200	1.4	1854	**305L4**		**BN71B4**	**M1SD4**	**N56C**	10,900	13,700	5,400
0.92	30,000	3.0	1843	**306L4**		**BN71B4**	**M1SD4**	**N56C**	14,900	18,800	7,870
0.94	29,400	0.9	1815	**304L4**		**BN71B4**	**M1SD4**	**N56C**	10,900	13,700	5,400
1.1	25,800	1.4	1586	**304L4**		**BN71B4**	**M1SD4**	**N56C**	10,600	13,400	5,270
1.1	25,800	1.6	1586	**305L4**		**BN71B4**	**M1SD4**	**N56C**	10,600	13,400	5,270
1.1	26,000	2.9	1597	**306L4**		**BN71B4**	**M1SD4**	**N56C**	14,600	18,500	7,710
1.2	22,300	0.9	1370	**303L4**		**BN71B4**	**M1SD4**	**N56C**	10,400	13,200	5,020
1.2	22,300	1.8	1370	**305L4**		**BN71B4**	**M1SD4**	**N56C**	10,400	13,200	5,020
1.3	20,800	1.0	1275	**301L4**		**BN71B4**	**M1SD4**	**N56C**	5,380	6,380	1,630
1.3	20,800	1.2	1278	**303L4**		**BN71B4**	**M1SD4**	**N56C**	10,300	13,000	4,910
1.3	20,700	1.7	1271	**304L4**		**BN71B4**	**M1SD4**	**N56C**	10,300	13,000	4,900
1.3	21,900	1.5	1344	**304L4**		**BN71B4**	**M1SD4**	**N56C**	10,400	13,100	4,990
1.3	20,800	2.3	1278	**305L4**		**BN71B4**	**M1SD4**	**N56C**	10,300	13,000	4,910
1.5	17,900	1.1	1098	**303L4**		**BN71B4**	**M1SD4**	**N56C**	10,100	12,800	4,660
1.5	19,000	1.3	1164	**304L4**		**BN71B4**	**M1SD4**	**N56C**	10,200	12,900	4,760
1.5	17,900	2.2	1098	**305L4**		**BN71B4**	**M1SD4**	**N56C**	10,100	12,800	4,660
1.7	16,600	1.2	1022	**301L4**		**BN71B4**	**M1SD4**	**N56C**	5,210	6,180	1,520
1.7	16,600	1.5	1018	**303L4**		**BN71B4**	**M1SD4**	**N56C**	9,990	12,600	4,550
1.7	16,600	2.0	1018	**304L4**		**BN71B4**	**M1SD4**	**N56C**	9,990	12,600	4,550
1.7	16,600	2.9	1018	**305L4**		**BN71B4**	**M1SD4**	**N56C**	9,990	12,600	4,550
1.8	15,300	1.3	942	**301L4**		**BN71B4**	**M1SD4**	**N56C**	5,150	6,110	1,480
1.9	14,600	1.3	896	**303L4**		**BN71B4**	**M1SD4**	**N56C**	9,810	12,400	4,360
1.9	14,600	2.5	896	**305L4**		**BN71B4**	**M1SD4**	**N56C**	9,810	12,400	4,360
2.1	13,300	1.5	819	**301L4**		**BN71B4**	**M1SD4**	**N56C**	5,050	5,990	1,410

P_1 = 0.5 hp

n_2 rpm	T_2 lb•in	S	i			IE1	IE1	NEMA	Rn_2 [lbs] NHC/HC NPC/PC	HZ/PZ	FZ
2.1	13,300	1.8	816	**303L4**		**BN71B4**	**M1SD4**	**N56C**	9,680	12,200	4,220
2.1	13,000	1.2	797		**303R4**	**BN71B4**	**M1SD4**	**N56C**	9,650	12,200	4,190
2.1	13,400	1.4	824		**303R4**	**BN71B4**	**M1SD4**	**N56C**	9,690	12,200	4,240
2.1	13,300	2.5	816	**304L4**		**BN71B4**	**M1SD4**	**N56C**	9,680	12,200	4,220
2.1	13,000	2.3	797		**305R4**	**BN71B4**	**M1SD4**	**N56C**	9,650	12,200	4,190
2.1	13,400	2.7	824		**305R4**	**BN71B4**	**M1SD4**	**N56C**	9,690	12,200	4,240
2.2	12,500	1.1	766		**301R4**	**BN71B4**	**M1SD4**	**N56C**	5,000	5,930	1,380
2.3	12,300	1.6	755	**301L4**		**BN71B4**	**M1SD4**	**N56C**	4,990	5,920	1,370
2.4	11,700	1.6	718	**303L4**		**BN71B4**	**M1SD4**	**N56C**	9,510	12,000	4,050
2.4	11,400	2.0	702	**304L4**		**BN71B4**	**M1SD4**	**N56C**	9,470	12,000	4,020
2.4	11,400	2.0	699		**304R4**	**BN71B4**	**M1SD4**	**N56C**	9,470	12,000	4,010
2.6	10,600	1.9	649	**303L4**		**BN71B4**	**M1SD4**	**N56C**	9,370	11,800	3,910
2.6	10,700	1.7	659		**303R4**	**BN71B4**	**M1SD4**	**N56C**	9,390	11,900	3,930
2.6	10,600	2.9	649	**304L4**		**BN71B4**	**M1SD4**	**N56C**	9,370	11,800	3,910
2.8	10,000	0.9	616	**300L4**		**BN71B4**	**M1SD4**	**N56C**	4,850	6,120	1,280
2.8	10,000	1.9	616	**301L4**		**BN71B4**	**M1SD4**	**N56C**	4,850	5,750	1,280
2.8	9,980	1.3	613		**301R4**	**BN71B4**	**M1SD4**	**N56C**	4,840	5,750	1,280
3.0	9,080	1.0	558	**300L4**		**BN71B4**	**M1SD4**	**N56C**	4,780	6,030	1,240
3.0	9,080	2.0	558	**301L4**		**BN71B4**	**M1SD4**	**N56C**	4,780	5,670	1,240
3.0	9,230	2.3	567		**303R4**	**BN71B4**	**M1SD4**	**N56C**	9,190	11,600	3,740
3.0	9,110	2.4	560		**304R4**	**BN71B4**	**M1SD4**	**N56C**	9,170	11,600	3,730
3.1	9,060	2.7	556	**303L4**		**BN71B4**	**M1SD4**	**N56C**	9,160	11,600	3,720
3.2	8,600	2.0	528		**303R4**	**BN71B4**	**M1SD4**	**N56C**	9,100	11,500	3,650
3.4	8,040	1.1	494	**300L4**		**BN71B4**	**M1SD4**	**N56C**	4,690	5,930	1,190
3.4	8,040	2.2	494	**301L4**		**BN71B4**	**M1SD4**	**N56C**	4,690	5,570	1,190
3.5	8,000	1.5	491		**301R4**	**BN71B4**	**M1SD4**	**N56C**	4,690	5,570	1,190
3.5	8,020	3.0	492	**303L4**		**BN71B4**	**M1SD4**	**N56C**	9,010	11,400	3,570
3.8	7,280	1.2	447	**300L4**		**BN71B4**	**M1SD4**	**N56C**	4,630	5,840	1,150
3.8	7,380	1.2	453		**300R4**	**BN71B4**	**M1SD4**	**N56C**	4,640	5,860	1,160
3.8	7,280	2.4	447	**301L4**		**BN71B4**	**M1SD4**	**N56C**	4,630	5,490	1,150
3.8	7,380	2.3	453		**301R4**	**BN71B4**	**M1SD4**	**N56C**	4,640	5,500	1,160
3.8	7,360	2.7	452		**303R4**	**BN71B4**	**M1SD4**	**N56C**	8,900	11,200	3,470
4.2	6,560	0.9	403	**300L4**		**BN71B4**	**M1SD4**	**N56C**	4,560	5,760	1,110
4.2	6,560	1.8	403	**301L4**		**BN71B4**	**M1SD4**	**N56C**	4,560	5,410	1,110
4.2	6,750	2.5	402	**303L3**		**BN71B4**	**M1SD4**	**N56C**	8,750	11,100	3,340
4.3	6,410	0.9	394		**300R4**	**BN71B4**	**M1SD4**	**N56C**	4,550	5,740	1,100
4.3	6,410	1.8	394		**301R4**	**BN71B4**	**M1SD4**	**N56C**	4,550	5,390	1,100
4.4	6,530	2.3	389	**303L3**		**BN71B4**	**M1SD4**	**N56C**	8,710	11,000	3,300
4.4	6,350	2.6	390		**303R4**	**BN71B4**	**M1SD4**	**N56C**	8,710	11,000	3,300
4.5	6,280	0.9	374	**300L3**		**BN71B4**	**M1SD4**	**N56C**	4,510	5,700	1,090
4.5	6,280	1.9	374	**301L3**		**BN71B4**	**M1SD4**	**N56C**	4,510	5,360	1,090
4.7	5,910	1.4	363		**300R4**	**BN71B4**	**M1SD4**	**N56C**	4,490	5,670	1,070
4.7	5,910	2.9	363		**301R4**	**BN71B4**	**M1SD4**	**N56C**	4,490	5,330	1,070
5.1	5,380	1.6	330	**300L4**		**BN71B4**	**M1SD4**	**N56C**	4,450	5,620	1,040
5.7	5,020	1.1	299	**300L3**		**BN71B4**	**M1SD4**	**N56C**	4,450	5,620	1,010
5.7	5,020	2.3	299	**301L3**		**BN71B4**	**M1SD4**	**N56C**	4,450	5,280	1,010
5.8	4,740	1.7	291		**300R4**	**BN71B4**	**M1SD4**	**N56C**	4,450	5,620	1,000
6.3	4,370	1.9	268		**300R4**	**BN71B4**	**M1SD4**	**N56C**	4,450	5,620	970
7.1	4,020	1.4	240	**300L3**		**BN71B4**	**M1SD4**	**N56C**	4,450	5,620	940
7.1	4,020	2.9	240	**301L3**		**BN71B4**	**M1SD4**	**N56C**	4,450	5,280	940
7.2	3,870	1.5	237		**300R4**	**BN71B4**	**M1SD4**	**N56C**	4,450	5,620	930
7.2	3,870	3.0	237		**301R4**	**BN71B4**	**M1SD4**	**N56C**	4,450	5,280	930
7.7	3,710	2.1	221	**300L3**		**BN71B4**	**M1SD4**	**N56C**	4,450	5,620	910
7.9	3,500	2.2	215		**300R4**	**BN71B4**	**M1SD4**	**N56C**	4,450	5,620	900
8.9	3,220	1.8	192	**300L3**		**BN71B4**	**M1SD4**	**N56C**	4,450	5,620	870
9.6	2,970	2.6	177	**300L3**		**BN71B4**	**M1SD4**	**N56C**	4,450	5,620	850
9.7	2,860	2.7	175		**300R4**	**BN71B4**	**M1SD4**	**N56C**	4,450	5,620	840
10.7	2,590	2.9	159		**300R4**	**BN71B4**	**M1SD4**	**N56C**	4,360	5,510	820
11.9	2,330	2.5	143		**300R4**	**BN71B4**	**M1SD4**	**N56C**	4,230	5,340	790
12.8	2,230	2.2	133		**300R3**	**BN71B4**	**M1SD4**	**N56C**	4,130	5,220	770
14.7	1,940	3.0	116	**300L3**		**BN71B4**	**M1SD4**	**N56C**	3,970	5,010	730

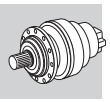

A

P_1 = 0.75 hp

n_2 rpm	T_2 lb•in	S	i			IE1	IE1	NEMA	Rn_2 [lbs] NHC/HC NPC/PC	HZ/PZ	FZ
0.71	58,300	1.7	2423	**307L4**		**BN80A4**	**M1LA4**	**N56C**	19,400	26,400	10,100
0.71	58,300	2.6	2423	**309L4**		**BN80A4**	**M1LA4**	**N56C**	19,400	26,400	8,090
0.73	56,200	1.1	2337	**306L4**		**BN80A4**	**M1LA4**	**N56C**	15,400	19,500	7,870
0.82	49,900	1.2	2074	**306L4**		**BN80A4**	**M1LA4**	**N56C**	15,200	19,100	7,870
0.84	49,100	2.6	2041	**307L4**		**BN80A4**	**M1LA4**	**N56C**	18,900	25,800	10,100
0.86	47,900	1.0	1991	**305L4**		**BN80A4**	**M1LA4**	**N56C**	11,000	13,900	5,400
0.92	44,600	0.9	1854	**305L4**		**BN80A4**	**M1LA4**	**N56C**	10,900	13,700	5,400
0.93	44,400	2.0	1843	**306L4**		**BN80A4**	**M1LA4**	**N56C**	14,900	18,800	7,870
1.1	38,200	0.9	1586	**304L4**		**BN80A4**	**M1LA4**	**N56C**	10,600	13,400	5,260
1.1	38,200	1.1	1586	**305L4**		**BN80A4**	**M1LA4**	**N56C**	10,600	13,400	5,260
1.1	38,400	2.0	1597	**306L4**		**BN80A4**	**M1LA4**	**N56C**	14,600	18,400	7,690
1.2	33,000	1.2	1370	**305L4**		**BN80A4**	**M1LA4**	**N56C**	10,400	13,200	5,010
1.2	35,500	2.5	1475	**306L4**		**BN80A4**	**M1LA4**	**N56C**	14,500	18,200	7,490
1.3	30,600	1.1	1271	**304L4**		**BN80A4**	**M1LA4**	**N56C**	10,300	13,000	4,890
1.3	32,300	1.0	1344	**304L4**		**BN80A4**	**M1LA4**	**N56C**	10,400	13,100	4,980
1.3	30,800	1.6	1278	**305L4**		**BN80A4**	**M1LA4**	**N56C**	10,300	13,000	4,900
1.3	30,800	2.4	1279	**306L4**		**BN80A4**	**M1LA4**	**N56C**	14,200	17,900	7,140
1.6	26,400	1.5	1098	**305L4**		**BN80A4**	**M1LA4**	**N56C**	10,100	12,700	4,650
1.6	26,300	2.6	1095	**306L4**		**BN80A4**	**M1LA4**	**N56C**	13,900	17,500	6,780
1.7	24,500	1.0	1018	**303L4**		**BN80A4**	**M1LA4**	**N56C**	9,980	12,600	4,540
1.7	24,500	1.4	1018	**304L4**		**BN80A4**	**M1LA4**	**N56C**	9,980	12,600	4,540
1.7	24,500	2.0	1018	**305L4**		**BN80A4**	**M1LA4**	**N56C**	9,980	12,600	4,540
1.9	21,600	1.7	896	**305L4**		**BN80A4**	**M1LA4**	**N56C**	9,800	12,400	4,350
2.1	19,700	1.0	819	**301L4**		**BN80A4**	**M1LA4**	**N56C**	5,040	5,980	1,410
2.1	19,600	1.2	816	**303L4**		**BN80A4**	**M1LA4**	**N56C**	9,670	12,200	4,220
2.1	19,800	1.0	824		**303R4**	**BN80A4**	**M1LA4**	**N56C**	9,690	12,200	4,230
2.1	19,600	1.7	816	**304L4**		**BN80A4**	**M1LA4**	**N56C**	9,670	12,200	4,220
2.1	19,600	2.4	816	**305L4**		**BN80A4**	**M1LA4**	**N56C**	9,670	12,200	4,220
2.1	19,200	1.6	797		**305R4**	**BN80A4**	**M1LA4**	**N56C**	9,640	12,200	4,180
2.1	19,800	1.8	824		**305R4**	**BN80A4**	**M1LA4**	**N56C**	9,690	12,200	4,230
2.1	20,000	2.7	830		**306R4**	**BN80A4**	**M1LA4**	**N56C**	13,300	16,800	6,180
2.3	18,200	1.1	755	**301L4**		**BN80A4**	**M1LA4**	**N56C**	4,980	5,920	1,370
2.4	17,300	1.1	718	**303L4**		**BN80A4**	**M1LA4**	**N56C**	9,500	12,000	4,040
2.4	16,900	1.3	702	**304L4**		**BN80A4**	**M1LA4**	**N56C**	9,470	12,000	4,010
2.4	16,800	1.4	699		**304R4**	**BN80A4**	**M1LA4**	**N56C**	9,460	12,000	4,010
2.4	17,300	2.1	718	**305L4**		**BN80A4**	**M1LA4**	**N56C**	9,500	12,000	4,040
2.6	15,600	1.3	649	**303L4**		**BN80A4**	**M1LA4**	**N56C**	9,360	11,800	3,910
2.6	15,900	1.2	659		**303R4**	**BN80A4**	**M1LA4**	**N56C**	9,380	11,900	3,930
2.6	15,600	2.0	649	**304L4**		**BN80A4**	**M1LA4**	**N56C**	9,360	11,800	3,910
2.6	15,600	2.5	649	**305L4**		**BN80A4**	**M1LA4**	**N56C**	9,360	11,800	3,910
2.6	15,900	2.2	659		**305R4**	**BN80A4**	**M1LA4**	**N56C**	9,380	11,900	3,930
2.8	14,800	1.3	616	**301L4**		**BN80A4**	**M1LA4**	**N56C**	4,840	5,750	1,280
3.0	13,600	1.5	567		**303R4**	**BN80A4**	**M1LA4**	**N56C**	9,180	11,600	3,730
3.1	13,400	1.4	558	**301L4**		**BN80A4**	**M1LA4**	**N56C**	4,770	5,670	1,240
3.1	13,400	1.9	556	**303L4**		**BN80A4**	**M1LA4**	**N56C**	9,160	11,600	3,710
3.1	13,400	2.5	556	**304L4**		**BN80A4**	**M1LA4**	**N56C**	9,160	11,600	3,710
3.1	13,500	1.6	560		**304R4**	**BN80A4**	**M1LA4**	**N56C**	9,170	11,600	3,720
3.2	12,700	1.4	528		**303R4**	**BN80A4**	**M1LA4**	**N56C**	9,090	11,500	3,650
3.2	12,700	2.7	528		**305R4**	**BN80A4**	**M1LA4**	**N56C**	9,090	11,500	3,650
3.5	11,900	1.5	494	**301L4**		**BN80A4**	**M1LA4**	**N56C**	4,690	5,570	1,190
3.5	11,800	1.0	491		**301R4**	**BN80A4**	**M1LA4**	**N56C**	4,690	5,560	1,190
3.5	11,800	2.0	492	**303L4**		**BN80A4**	**M1LA4**	**N56C**	9,000	11,400	3,560
3.5	11,800	2.8	492	**304L4**		**BN80A4**	**M1LA4**	**N56C**	9,000	11,400	3,560
3.8	10,800	1.6	447	**301L4**		**BN80A4**	**M1LA4**	**N56C**	4,620	5,490	1,150
3.8	10,900	1.5	453		**301R4**	**BN80A4**	**M1LA4**	**N56C**	4,630	5,500	1,160
3.8	10,700	2.3	446	**303L4**		**BN80A4**	**M1LA4**	**N56C**	8,870	11,200	3,450
3.8	10,900	1.8	452		**303R4**	**BN80A4**	**M1LA4**	**N56C**	8,890	11,200	3,460
3.8	10,900	3.0	452		**304R4**	**BN80A4**	**M1LA4**	**N56C**	8,890	11,200	3,460
4.0	10,600	2.0	426	**304L3**		**BN80A4**	**M1LA4**	**N56C**	8,810	11,100	3,390
4.1	9,940	2.1	413	**303L4**		**BN80A4**	**M1LA4**	**N56C**	8,780	11,100	3,360
4.1	9,940	2.6	413	**304L4**		**BN80A4**	**M1LA4**	**N56C**	8,780	11,100	3,360
4.1	9,950	2.2	414		**304R4**	**BN80A4**	**M1LA4**	**N56C**	8,780	11,100	3,360
4.2	9,700	1.2	403	**301L4**		**BN80A4**	**M1LA4**	**N56C**	4,560	5,410	1,110
4.3	9,470	1.2	394		**301R4**	**BN80A4**	**M1LA4**	**N56C**	4,540	5,390	1,100
4.3	9,970	1.7	402	**303L3**		**BN80A4**	**M1LA4**	**N56C**	8,740	11,000	3,330

Bonfiglioli Riduttori

P_1 = 0.75 hp

n_2 rpm	T_2 lb•in	S	i			IE1	IE1	NEMA	Rn_2 [lbs] NHC/HC NPC/PC	HZ/PZ	FZ
4.4	9,650	1.5	389	**303L3**		**BN80A4**	**M1LA4**	**N56C**	8,700	11,000	3,290
4.4	9,390	1.8	390		**303R4**	**BN80A4**	**M1LA4**	**N56C**	8,700	11,000	3,300
4.4	9,650	2.9	389	**305L3**		**BN80A4**	**M1LA4**	**N56C**	8,700	11,000	3,290
4.6	9,280	1.3	374	**301L3**		**BN80A4**	**M1LA4**	**N56C**	4,510	5,350	1,080
4.7	8,740	1.0	363		**300R4**	**BN80A4**	**M1LA4**	**N56C**	4,490	5,670	1,070
4.7	8,740	1.9	363		**301R4**	**BN80A4**	**M1LA4**	**N56C**	4,490	5,330	1,070
4.7	8,760	2.3	364		**303R4**	**BN80A4**	**M1LA4**	**N56C**	8,620	10,900	3,220
4.7	8,760	2.9	364		**304R4**	**BN80A4**	**M1LA4**	**N56C**	8,620	10,900	3,220
5.0	8,470	2.5	341	**304L3**		**BN80A4**	**M1LA4**	**N56C**	8,540	10,800	3,150
5.1	8,080	2.4	336		**303R4**	**BN80A4**	**M1LA4**	**N56C**	8,540	10,800	3,140
5.1	8,120	2.6	338		**304R4**	**BN80A4**	**M1LA4**	**N56C**	8,540	10,800	3,140
5.2	7,950	1.1	330	**300L4**		**BN80A4**	**M1LA4**	**N56C**	4,450	5,620	1,040
5.2	7,950	2.1	330	**301L4**		**BN80A4**	**M1LA4**	**N56C**	4,450	5,280	1,040
5.3	7,970	2.0	321	**303L3**		**BN80A4**	**M1LA4**	**N56C**	8,540	10,800	3,090
5.5	7,520	2.2	313		**303R4**	**BN80A4**	**M1LA4**	**N56C**	8,540	10,800	3,060
5.7	7,420	1.6	299	**301L3**		**BN80A4**	**M1LA4**	**N56C**	4,450	5,280	1,010
5.9	7,000	1.2	291		**300R4**	**BN80A4**	**M1LA4**	**N56C**	4,450	5,620	1,000
5.9	7,000	2.4	291		**301R4**	**BN80A4**	**M1LA4**	**N56C**	4,450	5,280	1,000
6.2	6,860	2.9	276	**303L3**		**BN80A4**	**M1LA4**	**N56C**	8,540	10,800	2,940
6.4	6,460	1.3	268		**300R4**	**BN80A4**	**M1LA4**	**N56C**	4,450	5,620	970
6.4	6,460	2.5	268		**301R4**	**BN80A4**	**M1LA4**	**N56C**	4,450	5,280	970
6.6	6,390	2.5	258	**303L3**		**BN80A4**	**M1LA4**	**N56C**	8,540	10,800	2,870
6.7	6,140	2.6	255		**303R4**	**BN80A4**	**M1LA4**	**N56C**	8,540	10,800	2,860
7.1	5,950	1.0	240	**300L3**		**BN80A4**	**M1LA4**	**N56C**	4,450	5,620	930
7.1	5,950	1.9	240	**301L3**		**BN80A4**	**M1LA4**	**N56C**	4,450	5,280	930
7.2	5,710	1.0	237		**300R4**	**BN80A4**	**M1LA4**	**N56C**	4,450	5,620	930
7.2	5,710	2.0	237		**301R4**	**BN80A4**	**M1LA4**	**N56C**	4,450	5,280	930
7.4	5,560	2.9	231		**303R4**	**BN80A4**	**M1LA4**	**N56C**	8,540	10,800	2,770
7.7	5,480	1.4	221	**300L3**		**BN80A4**	**M1LA4**	**N56C**	4,450	5,620	910
7.7	5,480	2.9	221	**301L3**		**BN80A4**	**M1LA4**	**N56C**	4,450	5,280	910
8.0	5,170	1.5	215		**300R4**	**BN80A4**	**M1LA4**	**N56C**	4,450	5,620	900
8.9	4,760	1.2	192	**300L3**		**BN80A4**	**M1LA4**	**N56C**	4,450	5,620	870
8.9	4,760	2.4	192	**301L3**		**BN80A4**	**M1LA4**	**N56C**	4,450	5,280	870
9.7	4,390	1.7	177	**300L3**		**BN80A4**	**M1LA4**	**N56C**	4,450	5,620	840
9.7	4,220	1.8	175		**300R4**	**BN80A4**	**M1LA4**	**N56C**	4,450	5,620	840
10.8	3,820	2.0	159		**300R4**	**BN80A4**	**M1LA4**	**N56C**	4,350	5,500	810
11.9	3,450	1.7	143		**300R4**	**BN80A4**	**M1LA4**	**N56C**	4,220	5,330	790
12.1	3,520	2.2	142	**300L3**		**BN80A4**	**M1LA4**	**N56C**	4,210	5,310	780
12.9	3,300	1.5	133		**300R3**	**BN80A4**	**M1LA4**	**N56C**	4,130	5,210	770
13.1	3,250	2.3	131	**300L3**		**BN80A4**	**M1LA4**	**N56C**	4,110	5,190	760
13.2	3,120	2.4	130		**300R4**	**BN80A4**	**M1LA4**	**N56C**	4,100	5,170	760
14.8	2,870	2.0	116	**300L3**		**BN80A4**	**M1LA4**	**N56C**	3,960	5,000	730
16.1	2,640	2.2	106		**300R3**	**BN80A4**	**M1LA4**	**N56C**	3,860	4,880	710
16.2	2,550	3.0	106		**300R4**	**BN80A4**	**M1LA4**	**N56C**	3,850	4,870	710
16.3	2,600	2.9	105	**300L3**		**BN80A4**	**M1LA4**	**N56C**	3,840	4,850	710
20.1	2,110	2.7	85.2		**300R3**	**BN80A4**	**M1LA4**	**N56C**	3,610	4,560	660
26.4	1,660	2.9	64.8	**300L2**		**BN80A4**	**M1LA4**	**N56C**	3,330	4,200	600

P_1 = 1 hp

n_2 rpm	T_2 lb•in	S	i			IE2	IE3	IE2	IE3	NEMA	Rn_2 [lbs] NHC/HC NPC/PC	HZ/PZ	FZ
0.70	80,700	2.6	2523	**310ML4**		**BE80B4**	**BX90SR4**	**ME2SB4**	**MX2SB4**	**N56C**	22,800	29,500	14,600
0.72	77,500	1.3	2423	**307L4**		**BE80B4**	**BX90SR4**	**ME2SB4**	**MX2SB4**	**N56C**	19,300	26,300	10,100
0.72	77,500	1.9	2423	**309L4**		**BE80B4**	**BX90SR4**	**ME2SB4**	**MX2SB4**	**N56C**	19,300	26,300	8,090
0.85	66,300	0.9	2074	**306L4**		**BE80B4**	**BX90SR4**	**ME2SB4**	**MX2SB4**	**N56C**	15,100	19,100	7,870
0.86	65,300	1.9	2041	**307L4**		**BE80B4**	**BX90SR4**	**ME2SB4**	**MX2SB4**	**N56C**	18,900	25,700	10,100
0.88	64,000	2.3	2003	**309L4**		**BE80B4**	**BX90SR4**	**ME2SB4**	**MX2SB4**	**N56C**	18,800	25,600	8,090
0.95	58,900	1.5	1843	**306L4**		**BE80B4**	**BX90SR4**	**ME2SB4**	**MX2SB4**	**N56C**	14,900	18,700	7,870

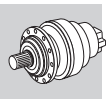

A

P_1 = 1 hp

n_2 rpm	T_2 lb•in	S	i			IE2	IE3	IE2	IE3	NEMA	Rn_2 [lbs] NHC/HC NPC/PC	HZ/PZ	FZ
0.99	56,500	2.5	1767	**307L4**		**BE80B4**	**BX90SR4**	**ME2SB4**	**MX2SB4**	**N56C**	18,500	25,100	10,100
1.0	55,100	2.7	1723	**309L4**		**BE80B4**	**BX90SR4**	**ME2SB4**	**MX2SB4**	**N56C**	18,400	25,100	8,040
1.1	51,100	1.5	1597	**306L4**		**BE80B4**	**BX90SR4**	**ME2SB4**	**MX2SB4**	**N56C**	14,600	18,400	7,620
1.1	50,900	2.6	1591	**307L4**		**BE80B4**	**BX90SR4**	**ME2SB4**	**MX2SB4**	**N56C**	18,200	24,800	9,790
1.1	51,300	2.9	1605	**309L4**		**BE80B4**	**BX90SR4**	**ME2SB4**	**MX2SB4**	**N56C**	18,200	24,800	7,860
1.2	47,200	1.9	1475	**306L4**		**BE80B4**	**BX90SR4**	**ME2SB4**	**MX2SB4**	**N56C**	14,400	18,200	7,420
1.3	43,800	0.9	1370	**305L4**		**BE80B4**	**BX90SR4**	**ME2SB4**	**MX2SB4**	**N56C**	10,400	13,100	4,970
1.4	40,900	1.2	1278	**305L4**		**BE80B4**	**BX90SR4**	**ME2SB4**	**MX2SB4**	**N56C**	10,300	13,000	4,850
1.4	40,900	1.8	1279	**306L4**		**BE80B4**	**BX90SR4**	**ME2SB4**	**MX2SB4**	**N56C**	14,100	17,800	7,080
1.4	40,800	2.7	1274	**307L4**		**BE80B4**	**BX90SR4**	**ME2SB4**	**MX2SB4**	**N56C**	17,600	24,000	9,090
1.6	35,100	1.1	1098	**305L4**		**BE80B4**	**BX90SR4**	**ME2SB4**	**MX2SB4**	**N56C**	10,100	12,700	4,610
1.6	35,000	2.0	1095	**306L4**		**BE80B4**	**BX90SR4**	**ME2SB4**	**MX2SB4**	**N56C**	13,800	17,400	6,720
1.7	32,600	1.0	1018	**304L4**		**BE80B4**	**BX90SR4**	**ME2SB4**	**MX2SB4**	**N56C**	9,950	12,600	4,500
1.7	32,600	1.5	1018	**305L4**		**BE80B4**	**BX90SR4**	**ME2SB4**	**MX2SB4**	**N56C**	9,950	12,600	4,500
1.7	32,500	2.6	1015	**306L4**		**BE80B4**	**BX90SR4**	**ME2SB4**	**MX2SB4**	**N56C**	13,700	17,200	6,560
2.0	28,700	1.3	896	**305L4**		**BE80B4**	**BX90SR4**	**ME2SB4**	**MX2SB4**	**N56C**	9,770	12,300	4,310
2.0	28,000	2.4	877	**306L4**		**BE80B4**	**BX90SR4**	**ME2SB4**	**MX2SB4**	**N56C**	13,400	16,900	6,240
2.1	26,300	1.4	824		**305R4**	**BE80B4**	**BX90SR4**	**ME2SB4**	**MX2SB4**	**N56C**	9,650	12,200	4,190
2.1	26,500	2.0	830		**306R4**	**BE80B4**	**BX90SR4**	**ME2SB4**	**MX2SB4**	**N56C**	13,300	16,700	6,130
2.2	26,100	0.9	816	**303L4**		**BE80B4**	**BX90SR4**	**ME2SB4**	**MX2SB4**	**N56C**	9,640	12,200	4,180
2.2	26,100	1.3	816	**304L4**		**BE80B4**	**BX90SR4**	**ME2SB4**	**MX2SB4**	**N56C**	9,640	12,200	4,180
2.2	26,100	1.8	816	**305L4**		**BE80B4**	**BX90SR4**	**ME2SB4**	**MX2SB4**	**N56C**	9,640	12,200	4,180
2.2	25,500	1.2	797		**305R4**	**BE80B4**	**BX90SR4**	**ME2SB4**	**MX2SB4**	**N56C**	9,600	12,100	4,150
2.2	25,900	2.6	809	**306L4**		**BE80B4**	**BX90SR4**	**ME2SB4**	**MX2SB4**	**N56C**	13,200	16,700	6,080
2.4	23,000	1.5	718	**305L4**		**BE80B4**	**BX90SR4**	**ME2SB4**	**MX2SB4**	**N56C**	9,460	12,000	4,010
2.5	22,400	1.0	702	**304L4**		**BE80B4**	**BX90SR4**	**ME2SB4**	**MX2SB4**	**N56C**	9,430	11,900	3,980
2.5	22,400	1.0	699		**304R4**	**BE80B4**	**BX90SR4**	**ME2SB4**	**MX2SB4**	**N56C**	9,430	11,900	3,970
2.6	21,300	2.4	665		**306R4**	**BE80B4**	**BX90SR4**	**ME2SB4**	**MX2SB4**	**N56C**	12,900	16,200	5,690
2.7	20,800	1.0	649	**303L4**		**BE80B4**	**BX90SR4**	**ME2SB4**	**MX2SB4**	**N56C**	9,330	11,800	3,870
2.7	20,800	1.5	649	**304L4**		**BE80B4**	**BX90SR4**	**ME2SB4**	**MX2SB4**	**N56C**	9,330	11,800	3,870
2.7	20,800	1.9	649	**305L4**		**BE80B4**	**BX90SR4**	**ME2SB4**	**MX2SB4**	**N56C**	9,330	11,800	3,870
2.7	21,100	1.7	659		**305R4**	**BE80B4**	**BX90SR4**	**ME2SB4**	**MX2SB4**	**N56C**	9,350	11,800	3,890
2.8	19,700	0.9	616	**301L4**		**BE80B4**	**BX90SR4**	**ME2SB4**	**MX2SB4**	**N56C**	4,820	5,730	1,270
3.1	17,800	1.0	558	**301L4**		**BE80B4**	**BX90SR4**	**ME2SB4**	**MX2SB4**	**N56C**	4,760	5,640	1,230
3.1	18,100	1.2	567		**303R4**	**BE80B4**	**BX90SR4**	**ME2SB4**	**MX2SB4**	**N56C**	9,150	11,600	3,700
3.1	17,900	1.2	560		**304R4**	**BE80B4**	**BX90SR4**	**ME2SB4**	**MX2SB4**	**N56C**	9,130	11,500	3,690
3.1	18,100	2.3	567		**305R4**	**BE80B4**	**BX90SR4**	**ME2SB4**	**MX2SB4**	**N56C**	9,150	11,600	3,700
3.2	17,800	1.4	556	**303L4**		**BE80B4**	**BX90SR4**	**ME2SB4**	**MX2SB4**	**N56C**	9,120	11,500	3,680
3.2	17,800	1.9	556	**304L4**		**BE80B4**	**BX90SR4**	**ME2SB4**	**MX2SB4**	**N56C**	9,120	11,500	3,680
3.2	17,800	2.7	556	**305L4**		**BE80B4**	**BX90SR4**	**ME2SB4**	**MX2SB4**	**N56C**	9,120	11,500	3,680
3.3	16,900	1.0	528		**303R4**	**BE80B4**	**BX90SR4**	**ME2SB4**	**MX2SB4**	**N56C**	9,060	11,400	3,620
3.3	16,900	2.0	528		**305R4**	**BE80B4**	**BX90SR4**	**ME2SB4**	**MX2SB4**	**N56C**	9,060	11,400	3,620
3.6	15,800	1.1	494	**301L4**		**BE80B4**	**BX90SR4**	**ME2SB4**	**MX2SB4**	**N56C**	4,670	5,550	1,180
3.6	15,700	1.5	492	**303L4**		**BE80B4**	**BX90SR4**	**ME2SB4**	**MX2SB4**	**N56C**	8,970	11,300	3,530
3.6	15,700	2.1	492	**304L4**		**BE80B4**	**BX90SR4**	**ME2SB4**	**MX2SB4**	**N56C**	8,970	11,300	3,530
3.6	15,700	3.0	492	**305L4**		**BE80B4**	**BX90SR4**	**ME2SB4**	**MX2SB4**	**N56C**	8,970	11,300	3,530
3.9	14,300	1.2	447	**301L4**		**BE80B4**	**BX90SR4**	**ME2SB4**	**MX2SB4**	**N56C**	4,610	5,470	1,140
3.9	14,500	1.2	453		**301R4**	**BE80B4**	**BX90SR4**	**ME2SB4**	**MX2SB4**	**N56C**	4,620	5,480	1,150
3.9	14,200	1.7	446	**303L4**		**BE80B4**	**BX90SR4**	**ME2SB4**	**MX2SB4**	**N56C**	8,840	11,200	3,420
3.9	14,400	1.4	452		**303R4**	**BE80B4**	**BX90SR4**	**ME2SB4**	**MX2SB4**	**N56C**	8,860	11,200	3,430
3.9	14,200	2.3	446	**304L4**		**BE80B4**	**BX90SR4**	**ME2SB4**	**MX2SB4**	**N56C**	8,840	11,200	3,420
3.9	14,400	2.3	452		**304R4**	**BE80B4**	**BX90SR4**	**ME2SB4**	**MX2SB4**	**N56C**	8,860	11,200	3,430
3.9	14,400	2.9	452		**305R4**	**BE80B4**	**BX90SR4**	**ME2SB4**	**MX2SB4**	**N56C**	8,860	11,200	3,430
4.1	14,000	1.5	426	**304L3**		**BE80B4**	**BX90SR4**	**ME2SB4**	**MX2SB4**	**N56C**	8,780	11,100	3,370
4.2	13,200	1.5	413	**303L4**		**BE80B4**	**BX90SR4**	**ME2SB4**	**MX2SB4**	**N56C**	8,740	11,000	3,330
4.2	13,200	2.0	413	**304L4**		**BE80B4**	**BX90SR4**	**ME2SB4**	**MX2SB4**	**N56C**	8,740	11,000	3,330
4.2	13,200	1.6	414		**304R4**	**BE80B4**	**BX90SR4**	**ME2SB4**	**MX2SB4**	**N56C**	8,750	11,000	3,330
4.4	12,900	0.9	403	**301L4**		**BE80B4**	**BX90SR4**	**ME2SB4**	**MX2SB4**	**N56C**	4,540	5,390	1,100
4.4	13,200	1.3	402	**303L3**		**BE80B4**	**BX90SR4**	**ME2SB4**	**MX2SB4**	**N56C**	8,710	11,000	3,300
4.4	13,200	2.5	402	**305L3**		**BE80B4**	**BX90SR4**	**ME2SB4**	**MX2SB4**	**N56C**	8,710	11,000	3,300
4.5	12,600	0.9	394		**301R4**	**BE80B4**	**BX90SR4**	**ME2SB4**	**MX2SB4**	**N56C**	4,520	5,370	1,090
4.5	12,800	1.1	389	**303L3**		**BE80B4**	**BX90SR4**	**ME2SB4**	**MX2SB4**	**N56C**	8,670	10,900	3,260
4.5	12,500	1.3	390		**303R4**	**BE80B4**	**BX90SR4**	**ME2SB4**	**MX2SB4**	**N56C**	8,670	11,000	3,270
4.5	12,800	2.2	389	**305L3**		**BE80B4**	**BX90SR4**	**ME2SB4**	**MX2SB4**	**N56C**	8,670	10,900	3,260
4.5	12,500	2.6	390		**305R4**	**BE80B4**	**BX90SR4**	**ME2SB4**	**MX2SB4**	**N56C**	8,670	11,000	3,270

Bonfiglioli Riduttori

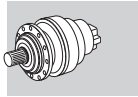

A

P_1 = 1 hp

n_2 rpm	T_2 lb•in	S	i			IE2	IE3	IE2	IE3	NEMA	Rn_2 [lbs] NHC/HC NPC/PC	HZ/PZ	FZ
4.7	12,300	0.9	374	**301L3**		**BE80B4**	**BX90SR4**	**ME2SB4**	**MX2SB4**	**N56C**	4,490	5,330	1,070
4.8	11,600	1.5	363		**301R4**	**BE80B4**	**BX90SR4**	**ME2SB4**	**MX2SB4**	**N56C**	4,470	5,310	1,060
4.8	11,600	1.7	364		**303R4**	**BE80B4**	**BX90SR4**	**ME2SB4**	**MX2SB4**	**N56C**	8,590	10,800	3,190
4.8	11,600	2.2	364		**304R4**	**BE80B4**	**BX90SR4**	**ME2SB4**	**MX2SB4**	**N56C**	8,590	10,800	3,190
5.1	11,200	1.9	341	**304L3**		**BE80B4**	**BX90SR4**	**ME2SB4**	**MX2SB4**	**N56C**	8,540	10,800	3,130
5.2	10,700	1.8	336		**303R4**	**BE80B4**	**BX90SR4**	**ME2SB4**	**MX2SB4**	**N56C**	8,540	10,800	3,110
5.2	10,800	2.0	338		**304R4**	**BE80B4**	**BX90SR4**	**ME2SB4**	**MX2SB4**	**N56C**	8,540	10,800	3,110
5.3	10,600	1.6	330	**301L4**		**BE80B4**	**BX90SR4**	**ME2SB4**	**MX2SB4**	**N56C**	4,450	5,280	1,030
5.5	10,600	1.5	321	**303L3**		**BE80B4**	**BX90SR4**	**ME2SB4**	**MX2SB4**	**N56C**	8,540	10,800	3,060
5.5	10,600	3.0	321	**305L3**		**BE80B4**	**BX90SR4**	**ME2SB4**	**MX2SB4**	**N56C**	8,540	10,800	3,060
5.6	10,000	1.6	313		**303R4**	**BE80B4**	**BX90SR4**	**ME2SB4**	**MX2SB4**	**N56C**	8,540	10,800	3,040
5.9	9,860	1.2	299	**301L3**		**BE80B4**	**BX90SR4**	**ME2SB4**	**MX2SB4**	**N56C**	4,450	5,280	1,000
6.0	9,300	1.8	291		**301R4**	**BE80B4**	**BX90SR4**	**ME2SB4**	**MX2SB4**	**N56C**	4,450	5,280	990
6.1	9,270	2.5	290		**303R4**	**BE80B4**	**BX90SR4**	**ME2SB4**	**MX2SB4**	**N56C**	8,540	10,800	2,960
6.3	9,110	2.2	276	**303L3**		**BE80B4**	**BX90SR4**	**ME2SB4**	**MX2SB4**	**N56C**	8,540	10,800	2,910
6.4	9,000	2.4	273	**304L3**		**BE80B4**	**BX90SR4**	**ME2SB4**	**MX2SB4**	**N56C**	8,540	10,800	2,900
6.5	8,580	0.9	268		**300R4**	**BE80B4**	**BX90SR4**	**ME2SB4**	**MX2SB4**	**N56C**	4,450	5,620	960
6.5	8,580	1.9	268		**301R4**	**BE80B4**	**BX90SR4**	**ME2SB4**	**MX2SB4**	**N56C**	4,450	5,280	960
6.8	8,490	1.9	258	**303L3**		**BE80B4**	**BX90SR4**	**ME2SB4**	**MX2SB4**	**N56C**	8,540	10,800	2,850
6.9	8,160	2.0	255		**303R4**	**BE80B4**	**BX90SR4**	**ME2SB4**	**MX2SB4**	**N56C**	8,540	10,800	2,840
7.3	7,900	1.5	240	**301L3**		**BE80B4**	**BX90SR4**	**ME2SB4**	**MX2SB4**	**N56C**	4,450	5,280	930
7.4	7,590	1.5	237		**301R4**	**BE80B4**	**BX90SR4**	**ME2SB4**	**MX2SB4**	**N56C**	4,450	5,280	920
7.6	7,390	2.2	231		**303R4**	**BE80B4**	**BX90SR4**	**ME2SB4**	**MX2SB4**	**N56C**	8,540	10,800	2,740
7.9	7,290	1.1	221	**300L3**		**BE80B4**	**BX90SR4**	**ME2SB4**	**MX2SB4**	**N56C**	4,450	5,620	900
7.9	7,290	2.1	221	**301L3**		**BE80B4**	**BX90SR4**	**ME2SB4**	**MX2SB4**	**N56C**	4,450	5,280	900
8.0	7,260	2.7	220	**303L3**		**BE80B4**	**BX90SR4**	**ME2SB4**	**MX2SB4**	**N56C**	8,540	10,800	2,700
8.2	6,870	1.1	215		**300R4**	**BE80B4**	**BX90SR4**	**ME2SB4**	**MX2SB4**	**N56C**	4,450	5,620	890
8.2	6,870	2.3	215		**301R4**	**BE80B4**	**BX90SR4**	**ME2SB4**	**MX2SB4**	**N56C**	4,450	5,280	890
9.1	6,330	0.9	192	**300L3**		**BE80B4**	**BX90SR4**	**ME2SB4**	**MX2SB4**	**N56C**	4,450	5,620	860
9.1	6,330	1.8	192	**301L3**		**BE80B4**	**BX90SR4**	**ME2SB4**	**MX2SB4**	**N56C**	4,450	5,280	860
9.2	6,270	2.6	190	**303L3**		**BE80B4**	**BX90SR4**	**ME2SB4**	**MX2SB4**	**N56C**	8,540	10,800	2,570
9.9	5,840	1.3	177	**300L3**		**BE80B4**	**BX90SR4**	**ME2SB4**	**MX2SB4**	**N56C**	4,450	5,620	840
9.9	5,840	2.6	177	**301L3**		**BE80B4**	**BX90SR4**	**ME2SB4**	**MX2SB4**	**N56C**	4,450	5,280	840
10.0	5,610	1.4	175		**300R4**	**BE80B4**	**BX90SR4**	**ME2SB4**	**MX2SB4**	**N56C**	4,450	5,620	830
10.0	5,610	2.7	175		**301R4**	**BE80B4**	**BX90SR4**	**ME2SB4**	**MX2SB4**	**N56C**	4,450	5,280	830
11.0	5,080	1.5	159		**300R4**	**BE80B4**	**BX90SR4**	**ME2SB4**	**MX2SB4**	**N56C**	4,320	5,450	810
11.0	5,080	3.0	159		**301R4**	**BE80B4**	**BX90SR4**	**ME2SB4**	**MX2SB4**	**N56C**	4,320	5,130	810
12.3	4,580	1.3	143		**300R4**	**BE80B4**	**BX90SR4**	**ME2SB4**	**MX2SB4**	**N56C**	4,190	5,290	780
12.3	4,580	2.5	143		**301R4**	**BE80B4**	**BX90SR4**	**ME2SB4**	**MX2SB4**	**N56C**	4,190	4,970	780
12.4	4,680	1.6	142	**300L3**		**BE80B4**	**BX90SR4**	**ME2SB4**	**MX2SB4**	**N56C**	4,180	5,270	780
13.2	4,380	1.1	133		**300R3**	**BE80B4**	**BX90SR4**	**ME2SB4**	**MX2SB4**	**N56C**	4,090	5,170	760
13.2	4,380	2.3	133		**301R3**	**BE80B4**	**BX90SR4**	**ME2SB4**	**MX2SB4**	**N56C**	4,090	4,860	760
13.4	4,310	1.8	131	**300L3**		**BE80B4**	**BX90SR4**	**ME2SB4**	**MX2SB4**	**N56C**	4,080	5,150	760
13.5	4,150	1.8	130		**300R4**	**BE80B4**	**BX90SR4**	**ME2SB4**	**MX2SB4**	**N56C**	4,060	5,130	750
15.2	3,820	1.5	116	**300L3**		**BE80B4**	**BX90SR4**	**ME2SB4**	**MX2SB4**	**N56C**	3,930	4,960	730
16.5	3,510	1.6	106		**300R3**	**BE80B4**	**BX90SR4**	**ME2SB4**	**MX2SB4**	**N56C**	3,830	4,840	710
16.6	3,380	2.2	106		**300R4**	**BE80B4**	**BX90SR4**	**ME2SB4**	**MX2SB4**	**N56C**	3,820	4,830	710
16.7	3,460	2.2	105	**300L3**		**BE80B4**	**BX90SR4**	**ME2SB4**	**MX2SB4**	**N56C**	3,810	4,820	700
20.5	2,820	2.7	85.6	**300L3**		**BE80B4**	**BX90SR4**	**ME2SB4**	**MX2SB4**	**N56C**	3,590	4,530	660
20.6	2,810	2.0	85.2		**300R3**	**BE80B4**	**BX90SR4**	**ME2SB4**	**MX2SB4**	**N56C**	3,580	4,520	660
22.3	2,590	2.9	78.7		**300R3**	**BE80B4**	**BX90SR4**	**ME2SB4**	**MX2SB4**	**N56C**	3,500	4,420	640
22.7	2,550	2.9	77.5	**300L3**		**BE80B4**	**BX90SR4**	**ME2SB4**	**MX2SB4**	**N56C**	3,480	4,400	640
25.1	2,300	2.5	69.9	**300L3**		**BE80B4**	**BX90SR4**	**ME2SB4**	**MX2SB4**	**N56C**	3,380	4,260	610
25.7	2,250	2.6	68.2		**300R3**	**BE80B4**	**BX90SR4**	**ME2SB4**	**MX2SB4**	**N56C**	3,350	4,230	610
27.1	2,200	2.2	64.8	**300L2**		**BE80B4**	**BX90SR4**	**ME2SB4**	**MX2SB4**	**N56C**	3,300	4,170	600

P_1 = 1.5 hp

n_2 rpm	T_2 lb•in	S	i			IE2	IE3	IE2	IE3	NEMA	Rn_2 [lbs] NHC/HC NPC/PC	HZ/PZ	FZ
0.69	118,600	1.8	2523	**310ML4**		**BE90S4**	**BX90S4**	**ME3SA4**	**MX3SA4**	**N140TC**	22,900	29,500	14,600
0.72	113,900	1.3	2423	**309L4**		**BE90S4**	**BX90S4**	**ME3SA4**	**MX3SA4**	**N140TC**	19,400	26,300	8,090
0.85	96,000	1.3	2041	**307L4**		**BE90S4**	**BX90S4**	**ME3SA4**	**MX3SA4**	**N140TC**	18,900	25,700	10,100
0.86	95,100	2.2	2022	**310ML4**		**BE90S4**	**BX90S4**	**ME3SA4**	**MX3SA4**	**N140TC**	22,100	28,600	14,600

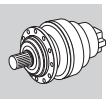

A

P_1 = 1.5 hp

n_2 rpm	T_2 lb•in	S	i			IE2	IE3	IE2	IE3	NEMA	Rn_2 [lbs] NHC/HC NPC/PC	HZ/PZ	FZ
0.87	94,100	1.6	2003	**309L4**		**BE90S4**	**BX90S4**	**ME3SA4**	**MX3SA4**	**N140TC**	18,800	25,600	8,090
0.94	86,700	1.0	1843	**306L4**		**BE90S4**	**BX90S4**	**ME3SA4**	**MX3SA4**	**N140TC**	14,900	18,800	7,870
0.97	84,400	2.5	1794	**310ML4**		**BE90S4**	**BX90S4**	**ME3SA4**	**MX3SA4**	**N140TC**	21,800	28,100	14,600
0.98	83,100	1.7	1767	**307L4**		**BE90S4**	**BX90S4**	**ME3SA4**	**MX3SA4**	**N140TC**	18,500	25,200	10,100
1.0	81,000	1.9	1723	**309L4**		**BE90S4**	**BX90S4**	**ME3SA4**	**MX3SA4**	**N140TC**	18,400	25,100	8,070
1.0	78,600	2.7	1672	**310ML4**		**BE90S4**	**BX90S4**	**ME3SA4**	**MX3SA4**	**N140TC**	21,500	27,800	14,400
1.1	75,100	1.0	1597	**306L4**		**BE90S4**	**BX90S4**	**ME3SA4**	**MX3SA4**	**N140TC**	14,600	18,400	7,650
1.1	74,800	1.8	1591	**307L4**		**BE90S4**	**BX90S4**	**ME3SA4**	**MX3SA4**	**N140TC**	18,200	24,800	9,820
1.1	75,400	2.0	1605	**309L4**		**BE90S4**	**BX90S4**	**ME3SA4**	**MX3SA4**	**N140TC**	18,300	24,800	7,880
1.2	69,300	1.3	1475	**306L4**		**BE90S4**	**BX90S4**	**ME3SA4**	**MX3SA4**	**N140TC**	14,400	18,200	7,450
1.2	66,200	2.1	1408	**307L4**		**BE90S4**	**BX90S4**	**ME3SA4**	**MX3SA4**	**N140TC**	17,900	24,400	9,430
1.3	64,900	2.2	1380	**309L4**		**BE90S4**	**BX90S4**	**ME3SA4**	**MX3SA4**	**N140TC**	17,900	24,300	7,490
1.4	60,200	1.2	1279	**306L4**		**BE90S4**	**BX90S4**	**ME3SA4**	**MX3SA4**	**N140TC**	14,100	17,800	7,100
1.4	59,900	1.8	1274	**307L4**		**BE90S4**	**BX90S4**	**ME3SA4**	**MX3SA4**	**N140TC**	17,700	24,000	9,120
1.4	60,400	2.4	1286	**309L4**		**BE90S4**	**BX90S4**	**ME3SA4**	**MX3SA4**	**N140TC**	17,700	24,100	7,320
1.5	54,400	2.3	1157	**307L4**		**BE90S4**	**BX90S4**	**ME3SA4**	**MX3SA4**	**N140TC**	17,400	23,700	8,830
1.5	54,000	2.6	1149	**309L4**		**BE90S4**	**BX90S4**	**ME3SA4**	**MX3SA4**	**N140TC**	17,400	23,700	7,050
1.6	51,500	1.3	1095	**306L4**		**BE90S4**	**BX90S4**	**ME3SA4**	**MX3SA4**	**N140TC**	13,800	17,400	6,740
1.7	47,900	1.0	1018	**305L4**		**BE90S4**	**BX90S4**	**ME3SA4**	**MX3SA4**	**N140TC**	9,960	12,600	4,510
1.7	47,700	1.7	1015	**306L4**		**BE90S4**	**BX90S4**	**ME3SA4**	**MX3SA4**	**N140TC**	13,700	17,200	6,570
1.7	47,000	2.5	999	**307L4**		**BE90S4**	**BX90S4**	**ME3SA4**	**MX3SA4**	**N140TC**	17,100	23,200	8,410
2.0	41,200	1.6	877	**306L4**		**BE90S4**	**BX90S4**	**ME3SA4**	**MX3SA4**	**N140TC**	13,400	16,900	6,260
2.1	38,400	1.2	816	**305L4**		**BE90S4**	**BX90S4**	**ME3SA4**	**MX3SA4**	**N140TC**	9,650	12,200	4,190
2.1	38,700	0.9	824		**305R4**	**BE90S4**	**BX90S4**	**ME3SA4**	**MX3SA4**	**N140TC**	9,660	12,200	4,200
2.1	39,000	1.4	830		**306R4**	**BE90S4**	**BX90S4**	**ME3SA4**	**MX3SA4**	**N140TC**	13,300	16,700	6,150
2.2	38,000	1.8	809	**306L4**		**BE90S4**	**BX90S4**	**ME3SA4**	**MX3SA4**	**N140TC**	13,200	16,700	6,100
2.4	33,800	1.1	718	**305L4**		**BE90S4**	**BX90S4**	**ME3SA4**	**MX3SA4**	**N140TC**	9,470	12,000	4,020
2.5	32,900	2.5	700	**306L4**		**BE90S4**	**BX90S4**	**ME3SA4**	**MX3SA4**	**N140TC**	13,000	16,300	5,810
2.5	32,400	2.6	690		**307R4**	**BE90S4**	**BX90S4**	**ME3SA4**	**MX3SA4**	**N140TC**	16,200	22,000	7,430
2.6	31,000	1.1	659		**305R4**	**BE90S4**	**BX90S4**	**ME3SA4**	**MX3SA4**	**N140TC**	9,360	11,800	3,900
2.6	31,300	1.7	665		**306R4**	**BE90S4**	**BX90S4**	**ME3SA4**	**MX3SA4**	**N140TC**	12,900	16,200	5,710
2.7	30,500	1.0	649	**304L4**		**BE90S4**	**BX90S4**	**ME3SA4**	**MX3SA4**	**N140TC**	9,340	11,800	3,880
2.7	30,500	1.3	649	**305L4**		**BE90S4**	**BX90S4**	**ME3SA4**	**MX3SA4**	**N140TC**	9,340	11,800	3,880
2.7	29,900	2.8	636	**306L4**		**BE90S4**	**BX90S4**	**ME3SA4**	**MX3SA4**	**N140TC**	12,800	16,100	5,620
2.9	27,800	2.7	590		**306R4**	**BE90S4**	**BX90S4**	**ME3SA4**	**MX3SA4**	**N140TC**	12,700	16,000	5,490
3.0	27,700	2.9	589	**306L4**		**BE90S4**	**BX90S4**	**ME3SA4**	**MX3SA4**	**N140TC**	12,700	15,900	5,480
3.1	26,100	1.0	556	**303L4**		**BE90S4**	**BX90S4**	**ME3SA4**	**MX3SA4**	**N140TC**	9,130	11,500	3,690
3.1	26,100	1.3	556	**304L4**		**BE90S4**	**BX90S4**	**ME3SA4**	**MX3SA4**	**N140TC**	9,130	11,500	3,690
3.1	26,100	1.9	556	**305L4**		**BE90S4**	**BX90S4**	**ME3SA4**	**MX3SA4**	**N140TC**	9,130	11,500	3,690
3.1	26,600	1.6	567		**305R4**	**BE90S4**	**BX90S4**	**ME3SA4**	**MX3SA4**	**N140TC**	9,160	11,600	3,710
3.2	25,900	2.4	550		**306R4**	**BE90S4**	**BX90S4**	**ME3SA4**	**MX3SA4**	**N140TC**	12,500	15,800	5,360
3.3	24,800	1.4	528		**305R4**	**BE90S4**	**BX90S4**	**ME3SA4**	**MX3SA4**	**N140TC**	9,070	11,500	3,630
3.5	23,100	1.0	492	**303L4**		**BE90S4**	**BX90S4**	**ME3SA4**	**MX3SA4**	**N140TC**	8,980	11,300	3,540
3.5	23,100	1.4	492	**304L4**		**BE90S4**	**BX90S4**	**ME3SA4**	**MX3SA4**	**N140TC**	8,980	11,300	3,540
3.5	23,100	2.0	492	**305L4**		**BE90S4**	**BX90S4**	**ME3SA4**	**MX3SA4**	**N140TC**	8,980	11,300	3,540
3.8	21,400	2.8	455		**306R4**	**BE90S4**	**BX90S4**	**ME3SA4**	**MX3SA4**	**N140TC**	12,200	15,400	5,030
3.9	21,000	1.2	446	**303L4**		**BE90S4**	**BX90S4**	**ME3SA4**	**MX3SA4**	**N140TC**	8,850	11,200	3,430
3.9	21,200	0.9	452		**303R4**	**BE90S4**	**BX90S4**	**ME3SA4**	**MX3SA4**	**N140TC**	8,870	11,200	3,440
3.9	21,000	1.6	446	**304L4**		**BE90S4**	**BX90S4**	**ME3SA4**	**MX3SA4**	**N140TC**	8,850	11,200	3,430
3.9	21,200	1.5	452		**304R4**	**BE90S4**	**BX90S4**	**ME3SA4**	**MX3SA4**	**N140TC**	8,870	11,200	3,440
3.9	21,000	2.3	446	**305L4**		**BE90S4**	**BX90S4**	**ME3SA4**	**MX3SA4**	**N140TC**	8,850	11,200	3,430
3.9	21,200	2.0	452		**305R4**	**BE90S4**	**BX90S4**	**ME3SA4**	**MX3SA4**	**N140TC**	8,870	11,200	3,440
4.1	20,600	1.0	426	**304L3**		**BE90S4**	**BX90S4**	**ME3SA4**	**MX3SA4**	**N140TC**	8,790	11,100	3,370
4.2	19,400	1.0	413	**303L4**		**BE90S4**	**BX90S4**	**ME3SA4**	**MX3SA4**	**N140TC**	8,760	11,100	3,340
4.2	19,400	1.3	413	**304L4**		**BE90S4**	**BX90S4**	**ME3SA4**	**MX3SA4**	**N140TC**	8,760	11,100	3,340
4.2	19,400	1.1	414		**304R4**	**BE90S4**	**BX90S4**	**ME3SA4**	**MX3SA4**	**N140TC**	8,760	11,100	3,340
4.2	19,400	2.1	413	**305L4**		**BE90S4**	**BX90S4**	**ME3SA4**	**MX3SA4**	**N140TC**	8,760	11,100	3,340
4.3	19,500	1.7	402	**305L3**		**BE90S4**	**BX90S4**	**ME3SA4**	**MX3SA4**	**N140TC**	8,720	11,000	3,310
4.3	19,600	2.5	405	**306L3**		**BE90S4**	**BX90S4**	**ME3SA4**	**MX3SA4**	**N140TC**	12,000	15,100	4,840
4.5	18,300	0.9	390		**303R4**	**BE90S4**	**BX90S4**	**ME3SA4**	**MX3SA4**	**N140TC**	8,680	11,000	3,280
4.5	18,800	1.5	389	**305L3**		**BE90S4**	**BX90S4**	**ME3SA4**	**MX3SA4**	**N140TC**	8,680	11,000	3,270
4.5	18,300	1.8	390		**305R4**	**BE90S4**	**BX90S4**	**ME3SA4**	**MX3SA4**	**N140TC**	8,680	11,000	3,280
4.8	17,100	1.0	363		**301R4**	**BE90S4**	**BX90S4**	**ME3SA4**	**MX3SA4**	**N140TC**	4,480	5,320	1,070
4.8	17,100	1.2	364		**303R4**	**BE90S4**	**BX90S4**	**ME3SA4**	**MX3SA4**	**N140TC**	8,600	10,900	3,200
4.8	17,100	1.5	364		**304R4**	**BE90S4**	**BX90S4**	**ME3SA4**	**MX3SA4**	**N140TC**	8,600	10,900	3,200

Bonfiglioli Riduttori

P_1 = 1.5 hp

n_2 rpm	T_2 lb•in	S	i			IE2	IE3	IE2	IE3	NEMA	Rn_2 [lbs] NHC/HC NPC/PC	HZ/PZ	FZ
4.8	17,100	2.3	364		**305R4**	**BE90S4**	**BX90S4**	**ME3SA4**	**MX3SA4**	**N140TC**	8,600	10,900	3,200
5.1	16,500	1.3	341	**304L3**		**BE90S4**	**BX90S4**	**ME3SA4**	**MX3SA4**	**N140TC**	8,540	10,800	3,130
5.2	15,800	1.3	336		**303R4**	**BE90S4**	**BX90S4**	**ME3SA4**	**MX3SA4**	**N140TC**	8,540	10,800	3,120
5.2	15,900	1.3	338		**304R4**	**BE90S4**	**BX90S4**	**ME3SA4**	**MX3SA4**	**N140TC**	8,540	10,800	3,120
5.2	15,800	2.5	336		**305R4**	**BE90S4**	**BX90S4**	**ME3SA4**	**MX3SA4**	**N140TC**	8,540	10,800	3,120
5.3	15,500	1.1	330	**301L4**		**BE90S4**	**BX90S4**	**ME3SA4**	**MX3SA4**	**N140TC**	4,450	5,280	1,030
5.4	15,600	1.0	321	**303L3**		**BE90S4**	**BX90S4**	**ME3SA4**	**MX3SA4**	**N140TC**	8,540	10,800	3,070
5.4	15,600	2.0	321	**305L3**		**BE90S4**	**BX90S4**	**ME3SA4**	**MX3SA4**	**N140TC**	8,540	10,800	3,070
5.6	14,700	1.1	313		**303R4**	**BE90S4**	**BX90S4**	**ME3SA4**	**MX3SA4**	**N140TC**	8,540	10,800	3,040
5.6	14,700	2.2	313		**305R4**	**BE90S4**	**BX90S4**	**ME3SA4**	**MX3SA4**	**N140TC**	8,540	10,800	3,040
5.7	14,400	2.1	307		**304R4**	**BE90S4**	**BX90S4**	**ME3SA4**	**MX3SA4**	**N140TC**	8,540	10,800	3,020
6.0	13,700	1.2	291		**301R4**	**BE90S4**	**BX90S4**	**ME3SA4**	**MX3SA4**	**N140TC**	4,450	5,280	990
6.0	13,600	1.7	290		**303R4**	**BE90S4**	**BX90S4**	**ME3SA4**	**MX3SA4**	**N140TC**	8,540	10,800	2,970
6.0	13,600	2.4	290		**304R4**	**BE90S4**	**BX90S4**	**ME3SA4**	**MX3SA4**	**N140TC**	8,540	10,800	2,970
6.3	13,400	1.5	276	**303L3**		**BE90S4**	**BX90S4**	**ME3SA4**	**MX3SA4**	**N140TC**	8,540	10,800	2,920
6.3	13,400	2.9	276	**305L3**		**BE90S4**	**BX90S4**	**ME3SA4**	**MX3SA4**	**N140TC**	8,540	10,800	2,920
6.4	13,200	1.6	273	**304L3**		**BE90S4**	**BX90S4**	**ME3SA4**	**MX3SA4**	**N140TC**	8,540	10,800	2,910
6.5	12,600	1.3	268		**301R4**	**BE90S4**	**BX90S4**	**ME3SA4**	**MX3SA4**	**N140TC**	4,450	5,280	960
6.5	12,600	2.6	267		**304R4**	**BE90S4**	**BX90S4**	**ME3SA4**	**MX3SA4**	**N140TC**	8,540	10,800	2,890
6.8	12,500	1.3	258	**303L3**		**BE90S4**	**BX90S4**	**ME3SA4**	**MX3SA4**	**N140TC**	8,540	10,800	2,850
6.8	12,000	1.4	255		**303R4**	**BE90S4**	**BX90S4**	**ME3SA4**	**MX3SA4**	**N140TC**	8,540	10,800	2,850
6.8	12,500	2.6	258	**305L3**		**BE90S4**	**BX90S4**	**ME3SA4**	**MX3SA4**	**N140TC**	8,540	10,800	2,850
6.8	12,000	2.7	255		**305R4**	**BE90S4**	**BX90S4**	**ME3SA4**	**MX3SA4**	**N140TC**	8,540	10,800	2,850
7.3	11,600	1.0	240	**301L3**		**BE90S4**	**BX90S4**	**ME3SA4**	**MX3SA4**	**N140TC**	4,450	5,280	930
7.3	11,200	1.0	237		**301R4**	**BE90S4**	**BX90S4**	**ME3SA4**	**MX3SA4**	**N140TC**	4,450	5,280	930
7.5	10,900	1.5	231		**303R4**	**BE90S4**	**BX90S4**	**ME3SA4**	**MX3SA4**	**N140TC**	8,540	10,800	2,750
7.5	10,900	2.9	231		**305R4**	**BE90S4**	**BX90S4**	**ME3SA4**	**MX3SA4**	**N140TC**	8,540	10,800	2,750
7.7	10,600	2.9	227		**304R4**	**BE90S4**	**BX90S4**	**ME3SA4**	**MX3SA4**	**N140TC**	8,540	10,800	2,730
7.9	10,700	1.5	221	**301L3**		**BE90S4**	**BX90S4**	**ME3SA4**	**MX3SA4**	**N140TC**	4,450	5,280	900
7.9	10,700	1.9	220	**303L3**		**BE90S4**	**BX90S4**	**ME3SA4**	**MX3SA4**	**N140TC**	8,540	10,800	2,710
7.9	10,700	3.0	220	**304L3**		**BE90S4**	**BX90S4**	**ME3SA4**	**MX3SA4**	**N140TC**	8,540	10,800	2,710
8.1	10,100	1.6	215		**301R4**	**BE90S4**	**BX90S4**	**ME3SA4**	**MX3SA4**	**N140TC**	4,450	5,280	900
8.1	10,100	2.4	214		**303R4**	**BE90S4**	**BX90S4**	**ME3SA4**	**MX3SA4**	**N140TC**	8,540	10,800	2,680
8.6	9,780	2.2	202	**304L3**		**BE90S4**	**BX90S4**	**ME3SA4**	**MX3SA4**	**N140TC**	8,540	10,800	2,630
9.1	9,310	1.2	192	**301L3**		**BE90S4**	**BX90S4**	**ME3SA4**	**MX3SA4**	**N140TC**	4,450	5,280	860
9.1	9,220	1.7	190	**303L3**		**BE90S4**	**BX90S4**	**ME3SA4**	**MX3SA4**	**N140TC**	8,540	10,800	2,580
9.4	8,690	2.4	185		**303R4**	**BE90S4**	**BX90S4**	**ME3SA4**	**MX3SA4**	**N140TC**	8,540	10,800	2,560
9.8	8,580	1.8	177	**301L3**		**BE90S4**	**BX90S4**	**ME3SA4**	**MX3SA4**	**N140TC**	4,450	5,280	840
9.8	8,600	2.3	178	**303L3**		**BE90S4**	**BX90S4**	**ME3SA4**	**MX3SA4**	**N140TC**	8,540	10,800	2,520
9.8	8,600	2.9	178	**304L3**		**BE90S4**	**BX90S4**	**ME3SA4**	**MX3SA4**	**N140TC**	8,540	10,800	2,520
9.9	8,250	0.9	175		**300R4**	**BE90S4**	**BX90S4**	**ME3SA4**	**MX3SA4**	**N140TC**	4,450	5,620	840
9.9	8,250	1.9	175		**301R4**	**BE90S4**	**BX90S4**	**ME3SA4**	**MX3SA4**	**N140TC**	4,450	5,280	840
10.6	7,930	2.5	164	**303L3**		**BE90S4**	**BX90S4**	**ME3SA4**	**MX3SA4**	**N140TC**	8,390	10,600	2,450
10.6	7,980	2.7	165	**304L3**		**BE90S4**	**BX90S4**	**ME3SA4**	**MX3SA4**	**N140TC**	8,400	10,600	2,460
11.0	7,470	1.0	159		**300R4**	**BE90S4**	**BX90S4**	**ME3SA4**	**MX3SA4**	**N140TC**	4,330	5,470	810
11.0	7,470	2.0	159		**301R4**	**BE90S4**	**BX90S4**	**ME3SA4**	**MX3SA4**	**N140TC**	4,330	5,140	810
11.4	7,390	2.2	152	**303L3**		**BE90S4**	**BX90S4**	**ME3SA4**	**MX3SA4**	**N140TC**	8,210	10,400	2,400
11.7	6,970	2.9	148		**303R4**	**BE90S4**	**BX90S4**	**ME3SA4**	**MX3SA4**	**N140TC**	8,140	10,300	2,370
12.1	6,730	1.7	143		**301R4**	**BE90S4**	**BX90S4**	**ME3SA4**	**MX3SA4**	**N140TC**	4,200	4,980	780
12.3	6,880	1.1	142	**300L3**		**BE90S4**	**BX90S4**	**ME3SA4**	**MX3SA4**	**N140TC**	4,190	5,290	780
12.3	6,880	2.2	142	**301L3**		**BE90S4**	**BX90S4**	**ME3SA4**	**MX3SA4**	**N140TC**	4,190	4,970	780
13.1	6,440	1.6	133		**301R3**	**BE90S4**	**BX90S4**	**ME3SA4**	**MX3SA4**	**N140TC**	4,100	4,870	760
13.3	6,340	1.2	131	**300L3**		**BE90S4**	**BX90S4**	**ME3SA4**	**MX3SA4**	**N140TC**	4,090	5,160	760
13.3	6,340	2.4	131	**301L3**		**BE90S4**	**BX90S4**	**ME3SA4**	**MX3SA4**	**N140TC**	4,090	4,850	760
13.4	6,100	1.2	130		**300R4**	**BE90S4**	**BX90S4**	**ME3SA4**	**MX3SA4**	**N140TC**	4,080	5,150	760
13.4	6,100	2.5	130		**301R4**	**BE90S4**	**BX90S4**	**ME3SA4**	**MX3SA4**	**N140TC**	4,080	4,840	760
14.0	6,030	2.7	124	**303L3**		**BE90S4**	**BX90S4**	**ME3SA4**	**MX3SA4**	**N140TC**	7,730	9,760	2,240
15.0	5,610	1.0	116	**300L3**		**BE90S4**	**BX90S4**	**ME3SA4**	**MX3SA4**	**N140TC**	3,940	4,970	730
15.0	5,610	2.0	116	**301L3**		**BE90S4**	**BX90S4**	**ME3SA4**	**MX3SA4**	**N140TC**	3,940	4,680	730
15.2	5,540	2.9	114		**303R3**	**BE90S4**	**BX90S4**	**ME3SA4**	**MX3SA4**	**N140TC**	7,530	9,510	2,180
15.4	5,460	2.9	113	**303L3**		**BE90S4**	**BX90S4**	**ME3SA4**	**MX3SA4**	**N140TC**	7,500	9,470	2,170
16.3	5,160	1.1	106		**300R3**	**BE90S4**	**BX90S4**	**ME3SA4**	**MX3SA4**	**N140TC**	3,840	4,850	710
16.3	5,160	2.2	106		**301R3**	**BE90S4**	**BX90S4**	**ME3SA4**	**MX3SA4**	**N140TC**	3,840	4,560	710
16.4	4,980	1.5	106		**300R4**	**BE90S4**	**BX90S4**	**ME3SA4**	**MX3SA4**	**N140TC**	3,830	4,840	710
16.4	4,980	3.0	106		**301R4**	**BE90S4**	**BX90S4**	**ME3SA4**	**MX3SA4**	**N140TC**	3,830	4,550	710

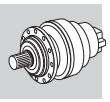

A

P_1 = 1.5 hp

n_2 rpm	T_2 lb•in	S	i			IE2	IE3	IE2	IE3	NEMA	Rn_2 [lbs] NHC/HC NPC/PC	HZ/PZ	FZ
16.6	5,080	1.5	105	**300L3**		**BE90S4**	**BX90S4**	**ME3SA4**	**MX3SA4**	**N140TC**	3,820	4,830	710
16.6	5,080	2.9	105	**301L3**		**BE90S4**	**BX90S4**	**ME3SA4**	**MX3SA4**	**N140TC**	3,820	4,540	710
20.3	4,150	1.8	85.6	**300L3**		**BE90S4**	**BX90S4**	**ME3SA4**	**MX3SA4**	**N140TC**	3,600	4,540	660
20.4	4,130	1.4	85.2		**300R3**	**BE90S4**	**BX90S4**	**ME3SA4**	**MX3SA4**	**N140TC**	3,590	4,540	660
20.4	4,130	2.8	85.2		**301R3**	**BE90S4**	**BX90S4**	**ME3SA4**	**MX3SA4**	**N140TC**	3,590	4,260	660
22.1	3,810	2.0	78.7		**300R3**	**BE90S4**	**BX90S4**	**ME3SA4**	**MX3SA4**	**N140TC**	3,510	4,430	640
22.5	3,760	2.0	77.5	**300L3**		**BE90S4**	**BX90S4**	**ME3SA4**	**MX3SA4**	**N140TC**	3,490	4,410	640
24.9	3,390	1.7	69.9	**300L3**		**BE90S4**	**BX90S4**	**ME3SA4**	**MX3SA4**	**N140TC**	3,390	4,270	620
25.5	3,310	1.7	68.2		**300R3**	**BE90S4**	**BX90S4**	**ME3SA4**	**MX3SA4**	**N140TC**	3,360	4,240	610
26.9	3,240	1.5	64.8	**300L2**		**BE90S4**	**BX90S4**	**ME3SA4**	**MX3SA4**	**N140TC**	3,310	4,180	600
27.5	3,070	2.4	63.2	**300L3**		**BE90S4**	**BX90S4**	**ME3SA4**	**MX3SA4**	**N140TC**	3,290	4,150	600
27.7	3,050	2.5	62.9		**300R3**	**BE90S4**	**BX90S4**	**ME3SA4**	**MX3SA4**	**N140TC**	3,280	4,140	590
34	2,590	2.2	51.9	**300L2**		**BE90S4**	**BX90S4**	**ME3SA4**	**MX3SA4**	**N140TC**	3,100	3,910	560
34	2,500	3.0	51.6	**300L3**		**BE90S4**	**BX90S4**	**ME3SA4**	**MX3SA4**	**N140TC**	3,090	3,900	560
42	2,080	2.8	41.5	**300L2**		**BE90S4**	**BX90S4**	**ME3SA4**	**MX3SA4**	**N140TC**	2,900	3,660	520
42	1,990	2.9	41.2		**300R3**	**BE90S4**	**BX90S4**	**ME3SA4**	**MX3SA4**	**N140TC**	2,890	3,650	520

P_1 = 2 hp

n_2 rpm	T_2 lb•in	S	i			IE2	IE3	IE2	IE3	NEMA	Rn_2 [lbs] NHC/HC NPC/PC	HZ/PZ	FZ
0.69	164,100	1.3	2523	**310ML4**		**BE90LA4**	**BX90LA4**	**ME3SB4**	**MX3SB4**	**N140TC**	22,900	29,500	14,600
0.72	157,500	1.0	2423	**309L4**		**BE90LA4**	**BX90LA4**	**ME3SB4**	**MX3SB4**	**N140TC**	19,400	26,400	8,090
0.79	142,200	2.5	2187	**313ML4**		**BE90LA4**	**BX90LA4**	**ME3SB4**	**MX3SB4**	**N140TC**	38,900	48,700	18,000
0.83	136,300	2.4	2096	**311ML4**		**BE90LA4**	**BX90LA4**	**ME3SB4**	**MX3SB4**	**N140TC**	27,800	29,100	14,600
0.85	132,700	1.0	2041	**307L4**		**BE90LA4**	**BX90LA4**	**ME3SB4**	**MX3SB4**	**N140TC**	18,900	25,700	10,100
0.86	131,500	1.6	2022	**310ML4**		**BE90LA4**	**BX90LA4**	**ME3SB4**	**MX3SB4**	**N140TC**	22,200	28,600	14,600
0.87	130,200	1.2	2003	**309L4**		**BE90LA4**	**BX90LA4**	**ME3SB4**	**MX3SB4**	**N140TC**	18,900	25,600	8,090
0.97	116,700	1.8	1794	**310ML4**		**BE90LA4**	**BX90LA4**	**ME3SB4**	**MX3SB4**	**N140TC**	21,800	28,100	14,600
0.98	114,900	1.2	1767	**307L4**		**BE90LA4**	**BX90LA4**	**ME3SB4**	**MX3SB4**	**N140TC**	18,500	25,200	10,100
1.0	112,000	1.3	1723	**309L4**		**BE90LA4**	**BX90LA4**	**ME3SB4**	**MX3SB4**	**N140TC**	18,500	25,100	8,070
1.0	108,700	1.9	1672	**310ML4**		**BE90LA4**	**BX90LA4**	**ME3SB4**	**MX3SB4**	**N140TC**	21,600	27,800	14,400
1.0	109,200	2.9	1680	**311ML4**		**BE90LA4**	**BX90LA4**	**ME3SB4**	**MX3SB4**	**N140TC**	27,000	28,200	14,500
1.1	103,400	1.3	1591	**307L4**		**BE90LA4**	**BX90LA4**	**ME3SB4**	**MX3SB4**	**N140TC**	18,200	24,800	9,830
1.1	104,400	1.4	1605	**309L4**		**BE90LA4**	**BX90LA4**	**ME3SB4**	**MX3SB4**	**N140TC**	18,300	24,800	7,890
1.2	95,900	0.9	1475	**306L4**		**BE90LA4**	**BX90LA4**	**ME3SB4**	**MX3SB4**	**N140TC**	14,400	18,200	7,450
1.2	91,600	1.5	1408	**307L4**		**BE90LA4**	**BX90LA4**	**ME3SB4**	**MX3SB4**	**N140TC**	17,900	24,400	9,440
1.2	93,500	2.2	1438	**310ML4**		**BE90LA4**	**BX90LA4**	**ME3SB4**	**MX3SB4**	**N140TC**	21,100	27,200	13,700
1.3	83,600	1.7	1286	**309L4**		**BE90LA4**	**BX90LA4**	**ME3SB4**	**MX3SB4**	**N140TC**	17,700	24,100	7,320
1.3	89,800	1.6	1380	**309L4**		**BE90LA4**	**BX90LA4**	**ME3SB4**	**MX3SB4**	**N140TC**	17,900	24,300	7,500
1.4	82,900	1.3	1274	**307L4**		**BE90LA4**	**BX90LA4**	**ME3SB4**	**MX3SB4**	**N140TC**	17,700	24,000	9,130
1.4	81,900	2.7	1259	**310ML4**		**BE90LA4**	**BX90LA4**	**ME3SB4**	**MX3SB4**	**N140TC**	20,700	26,700	13,100
1.5	75,200	1.6	1157	**307L4**		**BE90LA4**	**BX90LA4**	**ME3SB4**	**MX3SB4**	**N140TC**	17,400	23,700	8,840
1.5	74,700	1.9	1149	**309L4**		**BE90LA4**	**BX90LA4**	**ME3SB4**	**MX3SB4**	**N140TC**	17,400	23,700	7,060
1.6	71,200	1.0	1095	**306L4**		**BE90LA4**	**BX90LA4**	**ME3SB4**	**MX3SB4**	**N140TC**	13,800	17,400	6,750
1.7	66,000	1.3	1015	**306L4**		**BE90LA4**	**BX90LA4**	**ME3SB4**	**MX3SB4**	**N140TC**	13,700	17,200	6,580
1.7	65,000	1.8	999	**307L4**		**BE90LA4**	**BX90LA4**	**ME3SB4**	**MX3SB4**	**N140TC**	17,100	23,200	8,420
1.7	65,000	2.5	999	**309L4**		**BE90LA4**	**BX90LA4**	**ME3SB4**	**MX3SB4**	**N140TC**	17,100	23,200	6,730
1.9	58,900	2.3	906	**307L4**		**BE90LA4**	**BX90LA4**	**ME3SB4**	**MX3SB4**	**N140TC**	16,800	22,900	8,150
1.9	58,900	2.7	906	**309L4**		**BE90LA4**	**BX90LA4**	**ME3SB4**	**MX3SB4**	**N140TC**	16,800	22,900	6,520
2.0	57,000	1.2	877	**306L4**		**BE90LA4**	**BX90LA4**	**ME3SB4**	**MX3SB4**	**N140TC**	13,400	16,900	6,270
2.1	52,600	0.9	816	**305L4**		**BE90LA4**	**BX90LA4**	**ME3SB4**	**MX3SB4**	**N140TC**	9,650	12,200	4,200
2.1	52,600	1.3	809	**306L4**		**BE90LA4**	**BX90LA4**	**ME3SB4**	**MX3SB4**	**N140TC**	13,200	16,700	6,100
2.1	54,000	1.0	830		**306R4**	**BE90LA4**	**BX90LA4**	**ME3SB4**	**MX3SB4**	**N140TC**	13,300	16,800	6,150
2.2	52,100	2.2	801	**307L4**		**BE90LA4**	**BX90LA4**	**ME3SB4**	**MX3SB4**	**N140TC**	16,500	22,500	7,820
2.4	47,000	2.8	722	**307L4**		**BE90LA4**	**BX90LA4**	**ME3SB4**	**MX3SB4**	**N140TC**	16,300	22,200	7,550
2.5	45,500	1.8	700	**306L4**		**BE90LA4**	**BX90LA4**	**ME3SB4**	**MX3SB4**	**N140TC**	13,000	16,400	5,810
2.5	44,900	1.9	690		**307R4**	**BE90LA4**	**BX90LA4**	**ME3SB4**	**MX3SB4**	**N140TC**	16,200	22,000	7,440
2.5	44,900	2.8	690		**309R4**	**BE90LA4**	**BX90LA4**	**ME3SB4**	**MX3SB4**	**N140TC**	16,200	22,000	5,950
2.6	43,300	1.2	665		**306R4**	**BE90LA4**	**BX90LA4**	**ME3SB4**	**MX3SB4**	**N140TC**	12,900	16,200	5,720
2.7	42,200	0.9	649	**305L4**		**BE90LA4**	**BX90LA4**	**ME3SB4**	**MX3SB4**	**N140TC**	9,340	11,800	3,890
2.7	41,300	2.0	636	**306L4**		**BE90LA4**	**BX90LA4**	**ME3SB4**	**MX3SB4**	**N140TC**	12,800	16,100	5,630

P_1 = 2 hp

n_2 rpm	T_2 lb•in	S	i			IE2	IE3	IE2	IE3	NEMA	Rn_2 [lbs] NHC/HC NPC/PC	HZ/PZ	FZ
2.7	42,500	2.6	654	**307L4**		**BE90LA4**	**BX90LA4**	**ME3SB4**	**MX3SB4**	**N140TC**	16,100	21,900	7,310
2.9	38,300	2.1	589	**306L4**		**BE90LA4**	**BX90LA4**	**ME3SB4**	**MX3SB4**	**N140TC**	12,700	16,000	5,490
2.9	38,400	1.9	590		**306R4**	**BE90LA4**	**BX90LA4**	**ME3SB4**	**MX3SB4**	**N140TC**	12,700	16,000	5,490
3.0	37,800	2.9	581		**307R4**	**BE90LA4**	**BX90LA4**	**ME3SB4**	**MX3SB4**	**N140TC**	15,800	21,500	7,030
3.1	36,200	0.9	556	**304L4**		**BE90LA4**	**BX90LA4**	**ME3SB4**	**MX3SB4**	**N140TC**	9,140	11,500	3,690
3.1	36,200	1.3	556	**305L4**		**BE90LA4**	**BX90LA4**	**ME3SB4**	**MX3SB4**	**N140TC**	9,140	11,500	3,690
3.1	36,900	1.1	567		**305R4**	**BE90LA4**	**BX90LA4**	**ME3SB4**	**MX3SB4**	**N140TC**	9,160	11,600	3,720
3.2	35,800	1.8	550		**306R4**	**BE90LA4**	**BX90LA4**	**ME3SB4**	**MX3SB4**	**N140TC**	12,500	15,800	5,360
3.3	34,300	1.0	528		**305R4**	**BE90LA4**	**BX90LA4**	**ME3SB4**	**MX3SB4**	**N140TC**	9,070	11,500	3,630
3.4	33,100	2.5	509	**306L4**		**BE90LA4**	**BX90LA4**	**ME3SB4**	**MX3SB4**	**N140TC**	12,400	15,600	5,230
3.5	32,000	1.0	492	**304L4**		**BE90LA4**	**BX90LA4**	**ME3SB4**	**MX3SB4**	**N140TC**	8,980	11,300	3,550
3.5	32,000	1.5	492	**305L4**		**BE90LA4**	**BX90LA4**	**ME3SB4**	**MX3SB4**	**N140TC**	8,980	11,300	3,550
3.5	31,900	2.5	490		**307R4**	**BE90LA4**	**BX90LA4**	**ME3SB4**	**MX3SB4**	**N140TC**	15,400	21,000	6,640
3.6	31,700	2.5	488		**306R4**	**BE90LA4**	**BX90LA4**	**ME3SB4**	**MX3SB4**	**N140TC**	12,300	15,500	5,160
3.8	29,400	1.1	452		**304R4**	**BE90LA4**	**BX90LA4**	**ME3SB4**	**MX3SB4**	**N140TC**	8,870	11,200	3,450
3.8	29,400	1.4	452		**305R4**	**BE90LA4**	**BX90LA4**	**ME3SB4**	**MX3SB4**	**N140TC**	8,870	11,200	3,450
3.8	29,600	2.0	455		**306R4**	**BE90LA4**	**BX90LA4**	**ME3SB4**	**MX3SB4**	**N140TC**	12,200	15,400	5,040
3.9	29,000	1.1	446	**304L4**		**BE90LA4**	**BX90LA4**	**ME3SB4**	**MX3SB4**	**N140TC**	8,850	11,200	3,430
3.9	29,000	1.7	446	**305L4**		**BE90LA4**	**BX90LA4**	**ME3SB4**	**MX3SB4**	**N140TC**	8,850	11,200	3,430
4.1	27,300	2.8	420		**306R4**	**BE90LA4**	**BX90LA4**	**ME3SB4**	**MX3SB4**	**N140TC**	12,100	15,200	4,900
4.2	26,900	1.0	413	**304L4**		**BE90LA4**	**BX90LA4**	**ME3SB4**	**MX3SB4**	**N140TC**	8,760	11,100	3,340
4.2	26,900	1.5	413	**305L4**		**BE90LA4**	**BX90LA4**	**ME3SB4**	**MX3SB4**	**N140TC**	8,760	11,100	3,340
4.3	26,900	1.2	402	**305L3**		**BE90LA4**	**BX90LA4**	**ME3SB4**	**MX3SB4**	**N140TC**	8,720	11,000	3,310
4.3	27,200	1.8	405	**306L3**		**BE90LA4**	**BX90LA4**	**ME3SB4**	**MX3SB4**	**N140TC**	12,000	15,100	4,840
4.4	25,400	1.3	390		**305R4**	**BE90LA4**	**BX90LA4**	**ME3SB4**	**MX3SB4**	**N140TC**	8,690	11,000	3,280
4.4	25,400	2.3	391	**306L4**		**BE90LA4**	**BX90LA4**	**ME3SB4**	**MX3SB4**	**N140TC**	11,900	15,000	4,790
4.5	26,100	1.1	389	**305L3**		**BE90LA4**	**BX90LA4**	**ME3SB4**	**MX3SB4**	**N140TC**	8,680	11,000	3,280
4.5	25,300	2.7	389		**306R4**	**BE90LA4**	**BX90LA4**	**ME3SB4**	**MX3SB4**	**N140TC**	11,900	15,000	4,780
4.8	23,700	1.1	364		**304R4**	**BE90LA4**	**BX90LA4**	**ME3SB4**	**MX3SB4**	**N140TC**	8,600	10,900	3,210
4.8	23,700	1.7	364		**305R4**	**BE90LA4**	**BX90LA4**	**ME3SB4**	**MX3SB4**	**N140TC**	8,600	10,900	3,210
5.1	22,900	0.9	341	**304L3**		**BE90LA4**	**BX90LA4**	**ME3SB4**	**MX3SB4**	**N140TC**	8,540	10,800	3,140
5.1	22,000	1.0	338		**304R4**	**BE90LA4**	**BX90LA4**	**ME3SB4**	**MX3SB4**	**N140TC**	8,540	10,800	3,130
5.2	21,800	0.9	336		**303R4**	**BE90LA4**	**BX90LA4**	**ME3SB4**	**MX3SB4**	**N140TC**	8,540	10,800	3,120
5.2	21,800	1.8	336		**305R4**	**BE90LA4**	**BX90LA4**	**ME3SB4**	**MX3SB4**	**N140TC**	8,540	10,800	3,120
5.3	21,800	2.2	325	**306L3**		**BE90LA4**	**BX90LA4**	**ME3SB4**	**MX3SB4**	**N140TC**	11,700	14,800	4,500
5.4	21,500	1.5	321	**305L3**		**BE90LA4**	**BX90LA4**	**ME3SB4**	**MX3SB4**	**N140TC**	8,540	10,800	3,080
5.6	20,300	1.6	313		**305R4**	**BE90LA4**	**BX90LA4**	**ME3SB4**	**MX3SB4**	**N140TC**	8,540	10,800	3,050
5.7	19,900	1.5	307		**304R4**	**BE90LA4**	**BX90LA4**	**ME3SB4**	**MX3SB4**	**N140TC**	8,540	10,800	3,030
6.0	18,900	1.2	290		**303R4**	**BE90LA4**	**BX90LA4**	**ME3SB4**	**MX3SB4**	**N140TC**	8,540	10,800	2,970
6.0	18,900	1.7	290		**304R4**	**BE90LA4**	**BX90LA4**	**ME3SB4**	**MX3SB4**	**N140TC**	8,540	10,800	2,970
6.0	18,900	2.5	290		**305R4**	**BE90LA4**	**BX90LA4**	**ME3SB4**	**MX3SB4**	**N140TC**	8,540	10,800	2,970
6.0	19,300	2.5	288	**306L3**		**BE90LA4**	**BX90LA4**	**ME3SB4**	**MX3SB4**	**N140TC**	11,700	14,800	4,320
6.3	18,500	1.1	276	**303L3**		**BE90LA4**	**BX90LA4**	**ME3SB4**	**MX3SB4**	**N140TC**	8,540	10,800	2,930
6.3	18,500	2.1	276	**305L3**		**BE90LA4**	**BX90LA4**	**ME3SB4**	**MX3SB4**	**N140TC**	8,540	10,800	2,930
6.4	18,300	1.2	273	**304L3**		**BE90LA4**	**BX90LA4**	**ME3SB4**	**MX3SB4**	**N140TC**	8,540	10,800	2,910
6.5	17,400	0.9	268		**301R4**	**BE90LA4**	**BX90LA4**	**ME3SB4**	**MX3SB4**	**N140TC**	4,450	5,280	970
6.5	17,400	1.8	267		**304R4**	**BE90LA4**	**BX90LA4**	**ME3SB4**	**MX3SB4**	**N140TC**	8,540	10,800	2,890
6.5	18,000	2.7	268	**306L3**		**BE90LA4**	**BX90LA4**	**ME3SB4**	**MX3SB4**	**N140TC**	11,700	14,800	4,220
6.7	17,300	0.9	258	**303L3**		**BE90LA4**	**BX90LA4**	**ME3SB4**	**MX3SB4**	**N140TC**	8,540	10,800	2,860
6.7	17,300	1.8	258	**305L3**		**BE90LA4**	**BX90LA4**	**ME3SB4**	**MX3SB4**	**N140TC**	8,540	10,800	2,860
6.8	16,600	1.0	255		**303R4**	**BE90LA4**	**BX90LA4**	**ME3SB4**	**MX3SB4**	**N140TC**	8,540	10,800	2,850
6.8	16,600	1.9	255		**305R4**	**BE90LA4**	**BX90LA4**	**ME3SB4**	**MX3SB4**	**N140TC**	8,540	10,800	2,850
7.5	15,000	1.1	231		**303R4**	**BE90LA4**	**BX90LA4**	**ME3SB4**	**MX3SB4**	**N140TC**	8,540	10,800	2,760
7.5	15,000	2.1	231		**305R4**	**BE90LA4**	**BX90LA4**	**ME3SB4**	**MX3SB4**	**N140TC**	8,540	10,800	2,760
7.7	14,700	2.1	227		**304R4**	**BE90LA4**	**BX90LA4**	**ME3SB4**	**MX3SB4**	**N140TC**	8,540	10,800	2,740
7.9	14,800	1.1	221	**301L3**		**BE90LA4**	**BX90LA4**	**ME3SB4**	**MX3SB4**	**N140TC**	4,450	5,280	900
7.9	14,800	1.3	220	**303L3**		**BE90LA4**	**BX90LA4**	**ME3SB4**	**MX3SB4**	**N140TC**	8,540	10,800	2,710
7.9	14,800	2.1	220	**304L3**		**BE90LA4**	**BX90LA4**	**ME3SB4**	**MX3SB4**	**N140TC**	8,540	10,800	2,710
7.9	14,800	2.8	220	**305L3**		**BE90LA4**	**BX90LA4**	**ME3SB4**	**MX3SB4**	**N140TC**	8,540	10,800	2,710
8.1	14,000	1.1	215		**301R4**	**BE90LA4**	**BX90LA4**	**ME3SB4**	**MX3SB4**	**N140TC**	4,450	5,280	900
8.1	13,900	1.7	214		**303R4**	**BE90LA4**	**BX90LA4**	**ME3SB4**	**MX3SB4**	**N140TC**	8,540	10,800	2,690
8.1	13,900	2.3	214		**304R4**	**BE90LA4**	**BX90LA4**	**ME3SB4**	**MX3SB4**	**N140TC**	8,540	10,800	2,690
8.6	13,500	1.6	202	**304L3**		**BE90LA4**	**BX90LA4**	**ME3SB4**	**MX3SB4**	**N140TC**	8,540	10,800	2,630
9.0	12,800	0.9	192	**301L3**		**BE90LA4**	**BX90LA4**	**ME3SB4**	**MX3SB4**	**N140TC**	4,450	5,280	860
9.1	12,800	1.3	190	**303L3**		**BE90LA4**	**BX90LA4**	**ME3SB4**	**MX3SB4**	**N140TC**	8,540	10,800	2,580

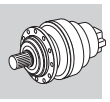

A

P_1 = 2 hp

n_2 rpm	T_2 lb•in	S	i			IE2	IE3	IE2	IE3	NEMA	Rn_2 [lbs] NHC/HC NPC/PC	HZ/PZ	FZ
9.1	12,800	2.5	190	**305L3**		**BE90LA4**	**BX90LA4**	**ME3SB4**	**MX3SB4**	**N140TC**	8,540	10,800	2,580
9.4	12,000	1.7	185		**303R4**	**BE90LA4**	**BX90LA4**	**ME3SB4**	**MX3SB4**	**N140TC**	8,540	10,800	2,560
9.4	12,000	2.5	185		**304R4**	**BE90LA4**	**BX90LA4**	**ME3SB4**	**MX3SB4**	**N140TC**	8,540	10,800	2,560
9.8	11,900	1.3	177	**301L3**		**BE90LA4**	**BX90LA4**	**ME3SB4**	**MX3SB4**	**N140TC**	4,450	5,280	840
9.8	11,900	1.6	178	**303L3**		**BE90LA4**	**BX90LA4**	**ME3SB4**	**MX3SB4**	**N140TC**	8,540	10,800	2,520
9.8	11,900	2.1	178	**304L3**		**BE90LA4**	**BX90LA4**	**ME3SB4**	**MX3SB4**	**N140TC**	8,540	10,800	2,520
9.9	11,400	1.3	175		**301R4**	**BE90LA4**	**BX90LA4**	**ME3SB4**	**MX3SB4**	**N140TC**	4,450	5,280	840
10.5	11,000	1.9	165	**304L3**		**BE90LA4**	**BX90LA4**	**ME3SB4**	**MX3SB4**	**N140TC**	8,410	10,600	2,460
10.6	11,000	1.8	164	**303L3**		**BE90LA4**	**BX90LA4**	**ME3SB4**	**MX3SB4**	**N140TC**	8,400	10,600	2,460
10.9	10,300	1.5	159		**301R4**	**BE90LA4**	**BX90LA4**	**ME3SB4**	**MX3SB4**	**N140TC**	4,330	5,140	810
11.0	10,300	2.3	158		**303R4**	**BE90LA4**	**BX90LA4**	**ME3SB4**	**MX3SB4**	**N140TC**	8,310	10,500	2,430
11.4	10,200	1.6	152	**303L3**		**BE90LA4**	**BX90LA4**	**ME3SB4**	**MX3SB4**	**N140TC**	8,220	10,400	2,400
11.7	9,640	2.1	148		**303R4**	**BE90LA4**	**BX90LA4**	**ME3SB4**	**MX3SB4**	**N140TC**	8,150	10,300	2,380
12.1	9,310	1.2	143		**301R4**	**BE90LA4**	**BX90LA4**	**ME3SB4**	**MX3SB4**	**N140TC**	4,200	4,990	780
12.2	9,510	1.6	142	**301L3**		**BE90LA4**	**BX90LA4**	**ME3SB4**	**MX3SB4**	**N140TC**	4,190	4,970	780
12.3	9,480	2.4	141	**303L3**		**BE90LA4**	**BX90LA4**	**ME3SB4**	**MX3SB4**	**N140TC**	8,040	10,100	2,340
13.1	8,910	1.1	133		**301R3**	**BE90LA4**	**BX90LA4**	**ME3SB4**	**MX3SB4**	**N140TC**	4,110	4,880	760
13.3	8,770	1.7	131	**301L3**		**BE90LA4**	**BX90LA4**	**ME3SB4**	**MX3SB4**	**N140TC**	4,090	4,850	760
13.4	8,360	0.9	130		**300R4**	**BE90LA4**	**BX90LA4**	**ME3SB4**	**MX3SB4**	**N140TC**	4,080	5,150	760
13.4	8,430	1.8	130		**301R4**	**BE90LA4**	**BX90LA4**	**ME3SB4**	**MX3SB4**	**N140TC**	4,080	4,840	760
13.4	8,410	2.7	129		**303R4**	**BE90LA4**	**BX90LA4**	**ME3SB4**	**MX3SB4**	**N140TC**	7,820	9,880	2,270
13.9	8,350	1.9	124	**303L3**		**BE90LA4**	**BX90LA4**	**ME3SB4**	**MX3SB4**	**N140TC**	7,730	9,770	2,240
14.3	8,130	2.6	121		**304R3**	**BE90LA4**	**BX90LA4**	**ME3SB4**	**MX3SB4**	**N140TC**	7,670	9,690	2,220
15.0	7,770	1.5	116	**301L3**		**BE90LA4**	**BX90LA4**	**ME3SB4**	**MX3SB4**	**N140TC**	3,940	4,680	730
15.2	7,670	2.1	114		**303R3**	**BE90LA4**	**BX90LA4**	**ME3SB4**	**MX3SB4**	**N140TC**	7,540	9,520	2,180
15.4	7,550	2.1	113	**303L3**		**BE90LA4**	**BX90LA4**	**ME3SB4**	**MX3SB4**	**N140TC**	7,510	9,480	2,170
16.3	7,140	1.6	106		**301R3**	**BE90LA4**	**BX90LA4**	**ME3SB4**	**MX3SB4**	**N140TC**	3,840	4,560	710
16.4	6,880	1.1	106		**300R4**	**BE90LA4**	**BX90LA4**	**ME3SB4**	**MX3SB4**	**N140TC**	3,840	4,850	710
16.4	6,880	2.2	106		**301R4**	**BE90LA4**	**BX90LA4**	**ME3SB4**	**MX3SB4**	**N140TC**	3,840	4,550	710
16.5	7,030	1.1	105	**300L3**		**BE90LA4**	**BX90LA4**	**ME3SB4**	**MX3SB4**	**N140TC**	3,830	4,830	710
16.5	7,030	2.1	105	**301L3**		**BE90LA4**	**BX90LA4**	**ME3SB4**	**MX3SB4**	**N140TC**	3,830	4,540	710
19.0	6,140	2.6	91.5		**303R3**	**BE90LA4**	**BX90LA4**	**ME3SB4**	**MX3SB4**	**N140TC**	7,050	8,910	2,020
20.3	5,740	1.3	85.6	**300L3**		**BE90LA4**	**BX90LA4**	**ME3SB4**	**MX3SB4**	**N140TC**	3,600	4,550	660
20.3	5,740	2.6	85.6	**301L3**		**BE90LA4**	**BX90LA4**	**ME3SB4**	**MX3SB4**	**N140TC**	3,600	4,270	660
20.4	5,710	1.0	85.2		**300R3**	**BE90LA4**	**BX90LA4**	**ME3SB4**	**MX3SB4**	**N140TC**	3,600	4,540	660
20.4	5,710	2.0	85.2		**301R3**	**BE90LA4**	**BX90LA4**	**ME3SB4**	**MX3SB4**	**N140TC**	3,600	4,270	660
22.1	5,270	1.4	78.7		**300R3**	**BE90LA4**	**BX90LA4**	**ME3SB4**	**MX3SB4**	**N140TC**	3,510	4,430	640
22.1	5,270	2.6	78.7		**301R3**	**BE90LA4**	**BX90LA4**	**ME3SB4**	**MX3SB4**	**N140TC**	3,510	4,170	640
22.4	5,190	1.4	77.5	**300L3**		**BE90LA4**	**BX90LA4**	**ME3SB4**	**MX3SB4**	**N140TC**	3,500	4,410	640
22.4	5,190	2.8	77.5	**301L3**		**BE90LA4**	**BX90LA4**	**ME3SB4**	**MX3SB4**	**N140TC**	3,500	4,150	640
24.8	4,680	1.2	69.9	**300L3**		**BE90LA4**	**BX90LA4**	**ME3SB4**	**MX3SB4**	**N140TC**	3,390	4,280	620
24.8	4,680	2.5	69.9	**301L3**		**BE90LA4**	**BX90LA4**	**ME3SB4**	**MX3SB4**	**N140TC**	3,390	4,020	620
25.4	4,570	1.3	68.2		**300R3**	**BE90LA4**	**BX90LA4**	**ME3SB4**	**MX3SB4**	**N140TC**	3,360	4,250	610
25.4	4,570	2.5	68.2		**301R3**	**BE90LA4**	**BX90LA4**	**ME3SB4**	**MX3SB4**	**N140TC**	3,360	3,990	610
26.8	4,480	1.1	64.8	**300L2**		**BE90LA4**	**BX90LA4**	**ME3SB4**	**MX3SB4**	**N140TC**	3,310	4,180	600
26.8	4,480	2.3	64.8	**301L2**		**BE90LA4**	**BX90LA4**	**ME3SB4**	**MX3SB4**	**N140TC**	3,310	3,930	600
27.4	4,240	1.8	63.2	**300L3**		**BE90LA4**	**BX90LA4**	**ME3SB4**	**MX3SB4**	**N140TC**	3,290	4,150	600
27.6	4,220	1.8	62.9		**300R3**	**BE90LA4**	**BX90LA4**	**ME3SB4**	**MX3SB4**	**N140TC**	3,280	4,150	600
33	3,590	1.6	51.9	**300L2**		**BE90LA4**	**BX90LA4**	**ME3SB4**	**MX3SB4**	**N140TC**	3,100	3,910	560
34	3,460	2.2	51.6	**300L3**		**BE90LA4**	**BX90LA4**	**ME3SB4**	**MX3SB4**	**N140TC**	3,090	3,910	560
34	3,380	2.2	50.4		**300R3**	**BE90LA4**	**BX90LA4**	**ME3SB4**	**MX3SB4**	**N140TC**	3,070	3,880	550
42	2,870	2.0	41.5	**300L2**		**BE90LA4**	**BX90LA4**	**ME3SB4**	**MX3SB4**	**N140TC**	2,900	3,660	520
42	2,760	2.1	41.2		**300R3**	**BE90LA4**	**BX90LA4**	**ME3SB4**	**MX3SB4**	**N140TC**	2,890	3,650	520
45	2,650	2.8	38.4	**300L2**		**BE90LA4**	**BX90LA4**	**ME3SB4**	**MX3SB4**	**N140TC**	2,830	3,570	500
47	2,500	3.0	37.3		**300R3**	**BE90LA4**	**BX90LA4**	**ME3SB4**	**MX3SB4**	**N140TC**	2,810	3,540	500
52	2,300	2.5	33.3	**300L2**		**BE90LA4**	**BX90LA4**	ME3SB4	**MX3SB4**	**N140TC**	2,710	3,420	480
94	1,280	2.6	18.5		**300R2**	**BE90LA4**	**BX90LA4**	ME3SB4	**MX3SB4**	**N140TC**	2,270	2,870	400

Bonfiglioli Riduttori

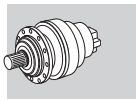

P_1 = 3 hp

n_2 rpm	T_2 lb•in	S	i			IE2	IE3	IE2	IE3	NEMA	Rn_2 [lbs] NHC/HC NPC/PC	HZ/PZ	FZ
0.70	235,300	0.9	2523	**310ML4**		**BE100LA4**	**BX100LA4**	**ME3LA4**	**MX3LA4**	**N180TC**	22,800	29,500	14,600
0.80	203,900	1.7	2187	**313ML4**		**BE100LA4**	**BX100LA4**	**ME3LA4**	**MX3LA4**	**N180TC**	38,800	48,600	18,000
0.84	195,500	1.7	2096	**311ML4**		**BE100LA4**	**BX100LA4**	**ME3LA4**	**MX3LA4**	**N180TC**	27,800	29,000	14,600
0.87	188,500	1.1	2022	**310ML4**		**BE100LA4**	**BX100LA4**	**ME3LA4**	**MX3LA4**	**N180TC**	22,100	28,500	14,600
0.97	169,400	3.0	1817	**313ML4**		**BE100LA4**	**BX100LA4**	**ME3LA4**	**MX3LA4**	**N180TC**	37,800	47,300	18,000
0.98	167,300	1.3	1794	**310ML4**		**BE100LA4**	**BX100LA4**	**ME3LA4**	**MX3LA4**	**N180TC**	21,700	28,100	14,600
1.0	160,600	0.9	1723	**309L4**		**BE100LA4**	**BX100LA4**	**ME3LA4**	**MX3LA4**	**N180TC**	18,400	25,000	8,040
1.0	156,600	2.0	1680	**311ML4**		**BE100LA4**	**BX100LA4**	**ME3LA4**	**MX3LA4**	**N180TC**	26,900	28,100	14,400
1.0	164,700	2.2	1766	**311ML4**		**BE100LA4**	**BX100LA4**	**ME3LA4**	**MX3LA4**	**N180TC**	27,100	28,300	14,600
1.1	149,600	1.0	1605	**309L4**		**BE100LA4**	**BX100LA4**	**ME3LA4**	**MX3LA4**	**N180TC**	18,200	24,800	7,850
1.1	155,900	1.3	1672	**310ML4**		**BE100LA4**	**BX100LA4**	**ME3LA4**	**MX3LA4**	**N180TC**	21,500	27,800	14,400
1.2	131,300	1.0	1408	**307L4**		**BE100LA4**	**BX100LA4**	**ME3LA4**	**MX3LA4**	**N180TC**	17,900	24,300	9,390
1.2	134,100	1.5	1438	**310ML4**		**BE100LA4**	**BX100LA4**	**ME3LA4**	**MX3LA4**	**N180TC**	21,100	27,200	13,700
1.2	132,000	2.8	1415	**311ML4**		**BE100LA4**	**BX100LA4**	**ME3LA4**	**MX3LA4**	**N180TC**	26,300	27,400	13,600
1.3	128,700	1.1	1380	**309L4**		**BE100LA4**	**BX100LA4**	**ME3LA4**	**MX3LA4**	**N180TC**	17,800	24,300	7,460
1.4	118,800	0.9	1274	**307L4**		**BE100LA4**	**BX100LA4**	**ME3LA4**	**MX3LA4**	**N180TC**	17,600	24,000	9,080
1.4	119,900	1.2	1286	**309L4**		**BE100LA4**	**BX100LA4**	**ME3LA4**	**MX3LA4**	**N180TC**	17,700	24,000	7,290
1.4	117,400	1.9	1259	**310ML4**		**BE100LA4**	**BX100LA4**	**ME3LA4**	**MX3LA4**	**N180TC**	20,700	26,700	13,100
1.5	107,900	1.1	1157	**307L4**		**BE100LA4**	**BX100LA4**	**ME3LA4**	**MX3LA4**	**N180TC**	17,400	23,700	8,800
1.5	107,200	1.3	1149	**309L4**		**BE100LA4**	**BX100LA4**	**ME3LA4**	**MX3LA4**	**N180TC**	17,400	23,600	7,020
1.5	108,600	2.3	1164	**310ML4**		**BE100LA4**	**BX100LA4**	**ME3LA4**	**MX3LA4**	**N180TC**	20,400	26,400	12,700
1.8	93,200	1.3	999	**307L4**		**BE100LA4**	**BX100LA4**	**ME3LA4**	**MX3LA4**	**N180TC**	17,000	23,200	8,380
1.8	93,200	1.7	999	**309L4**		**BE100LA4**	**BX100LA4**	**ME3LA4**	**MX3LA4**	**N180TC**	17,000	23,200	6,700
1.8	93,400	2.6	1002	**310ML4**		**BE100LA4**	**BX100LA4**	**ME3LA4**	**MX3LA4**	**N180TC**	20,000	25,800	12,100
1.9	84,500	1.6	906	**307L4**		**BE100LA4**	**BX100LA4**	**ME3LA4**	**MX3LA4**	**N180TC**	16,800	22,900	8,110
1.9	84,500	1.9	906	**309L4**		**BE100LA4**	**BX100LA4**	**ME3LA4**	**MX3LA4**	**N180TC**	16,800	22,900	6,490
2.0	83,700	2.2	898		**310MR4**	**BE100LA4**	**BX100LA4**	**ME3LA4**	**MX3LA4**	**N180TC**	19,700	25,400	11,700
2.2	74,600	1.5	801	**307L4**		**BE100LA4**	**BX100LA4**	**ME3LA4**	**MX3LA4**	**N180TC**	16,500	22,400	7,780
2.2	74,600	2.1	801	**309L4**		**BE100LA4**	**BX100LA4**	**ME3LA4**	**MX3LA4**	**N180TC**	16,500	22,400	6,220
2.4	67,300	2.0	722	**307L4**		**BE100LA4**	**BX100LA4**	**ME3LA4**	**MX3LA4**	**N180TC**	16,300	22,100	7,520
2.4	67,300	2.8	722	**309L4**		**BE100LA4**	**BX100LA4**	**ME3LA4**	**MX3LA4**	**N180TC**	16,300	22,100	6,010
2.5	65,200	1.3	700	**306L4**		**BE100LA4**	**BX100LA4**	**ME3LA4**	**MX3LA4**	**N180TC**	12,900	16,300	5,790
2.6	64,300	1.3	690		**307R4**	**BE100LA4**	**BX100LA4**	**ME3LA4**	**MX3LA4**	**N180TC**	16,200	22,000	7,400
2.6	64,300	2.0	690		**309R4**	**BE100LA4**	**BX100LA4**	**ME3LA4**	**MX3LA4**	**N180TC**	16,200	22,000	5,920
2.7	60,900	1.8	654	**307L4**		**BE100LA4**	**BX100LA4**	**ME3LA4**	**MX3LA4**	**N180TC**	16,000	21,800	7,270
2.7	60,900	2.6	654	**309L4**		**BE100LA4**	**BX100LA4**	**ME3LA4**	**MX3LA4**	**N180TC**	16,000	21,800	5,820
2.8	59,300	1.4	636	**306L4**		**BE100LA4**	**BX100LA4**	**ME3LA4**	**MX3LA4**	**N180TC**	12,800	16,100	5,600
2.8	59,500	3.0	639		**310MR4**	**BE100LA4**	**BX100LA4**	**ME3LA4**	**MX3LA4**	**N180TC**	18,800	24,200	10,400
3.0	55,000	1.5	589	**306L4**		**BE100LA4**	**BX100LA4**	**ME3LA4**	**MX3LA4**	**N180TC**	12,600	15,900	5,460
3.0	55,100	1.3	590		**306R4**	**BE100LA4**	**BX100LA4**	**ME3LA4**	**MX3LA4**	**N180TC**	12,600	15,900	5,470
3.0	54,000	2.4	579	**307L4**		**BE100LA4**	**BX100LA4**	**ME3LA4**	**MX3LA4**	**N180TC**	15,800	21,400	6,980
3.0	54,200	2.0	581		**307R4**	**BE100LA4**	**BX100LA4**	**ME3LA4**	**MX3LA4**	**N180TC**	15,800	21,400	6,990
3.0	54,200	2.6	581		**309R4**	**BE100LA4**	**BX100LA4**	**ME3LA4**	**MX3LA4**	**N180TC**	15,800	21,400	5,590
3.2	51,900	0.9	556	**305L4**		**BE100LA4**	**BX100LA4**	**ME3LA4**	**MX3LA4**	**N180TC**	9,120	11,500	3,670
3.2	51,300	1.2	550		**306R4**	**BE100LA4**	**BX100LA4**	**ME3LA4**	**MX3LA4**	**N180TC**	12,500	15,800	5,340
3.5	47,500	1.8	509	**306L4**		**BE100LA4**	**BX100LA4**	**ME3LA4**	**MX3LA4**	**N180TC**	12,400	15,600	5,200
3.5	47,500	2.6	509	**307L4**		**BE100LA4**	**BX100LA4**	**ME3LA4**	**MX3LA4**	**N180TC**	15,500	21,000	6,690
3.5	47,500	2.7	509	**309L4**		**BE100LA4**	**BX100LA4**	**ME3LA4**	**MX3LA4**	**N180TC**	15,500	21,000	5,350
3.6	45,900	1.0	492	**305L4**		**BE100LA4**	**BX100LA4**	**ME3LA4**	**MX3LA4**	**N180TC**	8,960	11,300	3,530
3.6	45,500	1.7	488		**306R4**	**BE100LA4**	**BX100LA4**	**ME3LA4**	**MX3LA4**	**N180TC**	12,300	15,500	5,130
3.6	45,700	1.8	490		**307R4**	**BE100LA4**	**BX100LA4**	**ME3LA4**	**MX3LA4**	**N180TC**	15,400	20,900	6,610
3.6	45,700	2.6	490		**309R4**	**BE100LA4**	**BX100LA4**	**ME3LA4**	**MX3LA4**	**N180TC**	15,400	20,900	5,290
3.8	43,300	2.4	465	**307L4**		**BE100LA4**	**BX100LA4**	**ME3LA4**	**MX3LA4**	**N180TC**	15,300	20,800	6,490
3.9	41,600	1.2	446	**305L4**		**BE100LA4**	**BX100LA4**	**ME3LA4**	**MX3LA4**	**N180TC**	8,840	11,200	3,410
3.9	42,100	1.0	452		**305R4**	**BE100LA4**	**BX100LA4**	**ME3LA4**	**MX3LA4**	**N180TC**	8,850	11,200	3,430
3.9	42,400	1.4	455		**306R4**	**BE100LA4**	**BX100LA4**	**ME3LA4**	**MX3LA4**	**N180TC**	12,200	15,300	5,010
3.9	42,200	2.8	453		**307R4**	**BE100LA4**	**BX100LA4**	**ME3LA4**	**MX3LA4**	**N180TC**	15,200	20,700	6,430
3.9	42,600	2.8	457		**309R4**	**BE100LA4**	**BX100LA4**	**ME3LA4**	**MX3LA4**	**N180TC**	15,200	20,700	5,160
4.0	41,400	2.1	444	**306L4**		**BE100LA4**	**BX100LA4**	**ME3LA4**	**MX3LA4**	**N180TC**	12,100	15,300	4,970
4.2	39,100	1.9	420		**306R4**	**BE100LA4**	**BX100LA4**	**ME3LA4**	**MX3LA4**	**N180TC**	12,000	15,200	4,880
4.3	38,500	1.1	413	**305L4**		**BE100LA4**	**BX100LA4**	**ME3LA4**	**MX3LA4**	**N180TC**	8,740	11,000	3,330
4.3	38,900	1.3	405	**306L3**		**BE100LA4**	**BX100LA4**	**ME3LA4**	**MX3LA4**	**N180TC**	12,000	15,100	4,820
4.3	37,800	2.7	406	**307L4**		**BE100LA4**	**BX100LA4**	**ME3LA4**	**MX3LA4**	**N180TC**	15,000	20,400	6,200
4.3	38,500	2.7	413		**307R4**	**BE100LA4**	**BX100LA4**	**ME3LA4**	**MX3LA4**	**N180TC**	15,000	20,400	6,240
4.5	36,500	1.6	391	**306L4**		**BE100LA4**	**BX100LA4**	**ME3LA4**	**MX3LA4**	**N180TC**	11,900	15,000	4,770

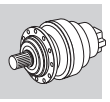

A

P_1 = 3 hp

n_2 rpm	T_2 lb•in	S	i			IE2	IE3	IE2	IE3	NEMA	Rn_2 [lbs] NHC/HC NPC/PC	HZ/PZ	FZ
4.5	36,300	1.9	389		**306R4**	**BE100LA4**	**BX100LA4**	**ME3LA4**	**MX3LA4**	**N180TC**	11,900	15,000	4,760
4.8	33,900	1.2	364		**305R4**	**BE100LA4**	**BX100LA4**	**ME3LA4**	**MX3LA4**	**N180TC**	8,580	10,800	3,190
5.2	31,300	1.3	336		**305R4**	**BE100LA4**	**BX100LA4**	**ME3LA4**	**MX3LA4**	**N180TC**	8,540	10,800	3,110
5.2	32,300	2.4	336	**307L3**		**BE100LA4**	**BX100LA4**	**ME3LA4**	**MX3LA4**	**N180TC**	14,700	20,000	5,830
5.4	31,200	1.6	325	**306L3**		**BE100LA4**	**BX100LA4**	**ME3LA4**	**MX3LA4**	**N180TC**	11,700	14,800	4,480
5.5	30,900	1.0	321	**305L3**		**BE100LA4**	**BX100LA4**	**ME3LA4**	**MX3LA4**	**N180TC**	8,540	10,800	3,060
5.6	29,100	1.1	313		**305R4**	**BE100LA4**	**BX100LA4**	**ME3LA4**	**MX3LA4**	**N180TC**	8,540	10,800	3,030
5.6	29,100	2.3	312		**306R4**	**BE100LA4**	**BX100LA4**	**ME3LA4**	**MX3LA4**	**N180TC**	11,700	14,800	4,420
5.7	28,600	1.1	307		**304R4**	**BE100LA4**	**BX100LA4**	**ME3LA4**	**MX3LA4**	**N180TC**	8,540	10,800	3,010
6.1	27,000	1.2	290		**304R4**	**BE100LA4**	**BX100LA4**	**ME3LA4**	**MX3LA4**	**N180TC**	8,540	10,800	2,960
6.1	27,000	1.7	290		**305R4**	**BE100LA4**	**BX100LA4**	**ME3LA4**	**MX3LA4**	**N180TC**	8,540	10,800	2,960
6.1	27,700	1.8	288	**306L3**		**BE100LA4**	**BX100LA4**	**ME3LA4**	**MX3LA4**	**N180TC**	11,700	14,800	4,300
6.1	26,900	2.7	289		**306R4**	**BE100LA4**	**BX100LA4**	**ME3LA4**	**MX3LA4**	**N180TC**	11,700	14,800	4,310
6.4	26,600	1.5	276	**305L3**		**BE100LA4**	**BX100LA4**	**ME3LA4**	**MX3LA4**	**N180TC**	8,540	10,800	2,910
6.6	24,900	1.3	267		**304R4**	**BE100LA4**	**BX100LA4**	**ME3LA4**	**MX3LA4**	**N180TC**	8,540	10,800	2,880
6.6	25,800	1.9	268	**306L3**		**BE100LA4**	**BX100LA4**	**ME3LA4**	**MX3LA4**	**N180TC**	11,700	14,800	4,200
6.8	24,800	1.3	258	**305L3**		**BE100LA4**	**BX100LA4**	**ME3LA4**	**MX3LA4**	**N180TC**	8,540	10,800	2,840
6.9	23,800	1.3	255		**305R4**	**BE100LA4**	**BX100LA4**	**ME3LA4**	**MX3LA4**	**N180TC**	8,540	10,800	2,830
7.6	21,500	1.5	231		**305R4**	**BE100LA4**	**BX100LA4**	**ME3LA4**	**MX3LA4**	**N180TC**	8,540	10,800	2,740
7.8	21,100	1.5	227		**304R4**	**BE100LA4**	**BX100LA4**	**ME3LA4**	**MX3LA4**	**N180TC**	8,540	10,800	2,720
7.9	21,300	2.7	222	**306L3**		**BE100LA4**	**BX100LA4**	**ME3LA4**	**MX3LA4**	**N180TC**	11,700	14,800	3,940
8.0	21,200	0.9	220	**303L3**		**BE100LA4**	**BX100LA4**	**ME3LA4**	**MX3LA4**	**N180TC**	8,540	10,800	2,700
8.0	21,200	1.5	220	**304L3**		**BE100LA4**	**BX100LA4**	**ME3LA4**	**MX3LA4**	**N180TC**	8,540	10,800	2,700
8.0	21,200	2.0	220	**305L3**		**BE100LA4**	**BX100LA4**	**ME3LA4**	**MX3LA4**	**N180TC**	8,540	10,800	2,700
8.2	20,000	1.2	214		**303R4**	**BE100LA4**	**BX100LA4**	**ME3LA4**	**MX3LA4**	**N180TC**	8,540	10,800	2,670
8.2	20,000	1.6	214		**304R4**	**BE100LA4**	**BX100LA4**	**ME3LA4**	**MX3LA4**	**N180TC**	8,540	10,800	2,670
8.2	20,000	2.4	214		**305R4**	**BE100LA4**	**BX100LA4**	**ME3LA4**	**MX3LA4**	**N180TC**	8,540	10,800	2,670
8.7	19,400	1.1	202	**304L3**		**BE100LA4**	**BX100LA4**	**ME3LA4**	**MX3LA4**	**N180TC**	8,540	10,800	2,620
9.2	18,300	1.7	190	**305L3**		**BE100LA4**	**BX100LA4**	**ME3LA4**	**MX3LA4**	**N180TC**	8,540	10,800	2,570
9.5	17,200	1.2	185		**303R4**	**BE100LA4**	**BX100LA4**	**ME3LA4**	**MX3LA4**	**N180TC**	8,540	10,800	2,550
9.5	17,200	1.8	185		**304R4**	**BE100LA4**	**BX100LA4**	**ME3LA4**	**MX3LA4**	**N180TC**	8,540	10,800	2,550
9.5	17,200	2.3	185		**305R4**	**BE100LA4**	**BX100LA4**	**ME3LA4**	**MX3LA4**	**N180TC**	8,540	10,800	2,550
9.9	17,000	0.9	177	**301L3**		**BE100LA4**	**BX100LA4**	**ME3LA4**	**MX3LA4**	**N180TC**	4,450	5,280	840
9.9	17,100	1.1	178	**303L3**		**BE100LA4**	**BX100LA4**	**ME3LA4**	**MX3LA4**	**N180TC**	8,540	10,800	2,510
9.9	17,100	1.5	178	**304L3**		**BE100LA4**	**BX100LA4**	**ME3LA4**	**MX3LA4**	**N180TC**	8,540	10,800	2,510
9.9	17,100	2.3	178	**305L3**		**BE100LA4**	**BX100LA4**	**ME3LA4**	**MX3LA4**	**N180TC**	8,540	10,800	2,510
10.0	16,400	0.9	175		**301R4**	**BE100LA4**	**BX100LA4**	**ME3LA4**	**MX3LA4**	**N180TC**	4,450	5,280	830
10.7	15,800	1.3	165	**304L3**		**BE100LA4**	**BX100LA4**	**ME3LA4**	**MX3LA4**	**N180TC**	8,370	10,600	2,450
10.8	15,700	1.2	164	**303L3**		**BE100LA4**	**BX100LA4**	**ME3LA4**	**MX3LA4**	**N180TC**	8,360	10,600	2,440
10.8	15,700	2.5	164	**305L3**		**BE100LA4**	**BX100LA4**	**ME3LA4**	**MX3LA4**	**N180TC**	8,360	10,600	2,440
11.1	14,800	1.0	159		**301R4**	**BE100LA4**	**BX100LA4**	**ME3LA4**	**MX3LA4**	**N180TC**	4,320	5,120	810
11.1	14,800	1.6	158		**303R4**	**BE100LA4**	**BX100LA4**	**ME3LA4**	**MX3LA4**	**N180TC**	8,280	10,500	2,420
11.1	14,800	2.1	158		**304R4**	**BE100LA4**	**BX100LA4**	**ME3LA4**	**MX3LA4**	**N180TC**	8,280	10,500	2,420
11.5	14,700	1.1	152	**303L3**		**BE100LA4**	**BX100LA4**	**ME3LA4**	**MX3LA4**	**N180TC**	8,180	10,300	2,390
11.5	14,700	2.2	152	**305L3**		**BE100LA4**	**BX100LA4**	**ME3LA4**	**MX3LA4**	**N180TC**	8,180	10,300	2,390
11.8	14,400	2.1	150	**304L3**		**BE100LA4**	**BX100LA4**	**ME3LA4**	**MX3LA4**	**N180TC**	8,140	10,300	2,370
11.9	13,800	1.5	148		**303R4**	**BE100LA4**	**BX100LA4**	**ME3LA4**	**MX3LA4**	**N180TC**	8,110	10,200	2,360
11.9	13,800	2.2	148		**304R4**	**BE100LA4**	**BX100LA4**	**ME3LA4**	**MX3LA4**	**N180TC**	8,110	10,200	2,360
11.9	13,800	2.8	148		**305R4**	**BE100LA4**	**BX100LA4**	**ME3LA4**	**MX3LA4**	**N180TC**	8,110	10,200	2,360
12.4	13,600	1.1	142	**301L3**		**BE100LA4**	**BX100LA4**	**ME3LA4**	**MX3LA4**	**N180TC**	4,170	4,950	780
12.4	13,600	1.7	141	**303L3**		**BE100LA4**	**BX100LA4**	**ME3LA4**	**MX3LA4**	**N180TC**	8,000	10,100	2,330
12.4	13,600	2.3	141	**304L3**		**BE100LA4**	**BX100LA4**	**ME3LA4**	**MX3LA4**	**N180TC**	8,000	10,100	2,330
13.4	12,600	1.2	131	**301L3**		**BE100LA4**	**BX100LA4**	**ME3LA4**	**MX3LA4**	**N180TC**	4,070	4,830	760
13.5	12,500	2.5	130	**304L3**		**BE100LA4**	**BX100LA4**	**ME3LA4**	**MX3LA4**	**N180TC**	7,810	9,860	2,270
13.6	12,100	1.2	130		**301R4**	**BE100LA4**	**BX100LA4**	**ME3LA4**	**MX3LA4**	**N180TC**	4,060	4,820	750
13.6	12,100	1.9	129		**303R4**	**BE100LA4**	**BX100LA4**	**ME3LA4**	**MX3LA4**	**N180TC**	7,790	9,840	2,260
13.6	12,100	2.6	129		**304R4**	**BE100LA4**	**BX100LA4**	**ME3LA4**	**MX3LA4**	**N180TC**	7,790	9,840	2,260
14.1	12,000	1.3	124	**303L3**		**BE100LA4**	**BX100LA4**	**ME3LA4**	**MX3LA4**	**N180TC**	7,700	9,730	2,230
14.1	12,000	2.7	124	**305L3**		**BE100LA4**	**BX100LA4**	**ME3LA4**	**MX3LA4**	**N180TC**	7,700	9,730	2,230
14.5	11,700	1.8	121		**304R3**	**BE100LA4**	**BX100LA4**	**ME3LA4**	**MX3LA4**	**N180TC**	7,640	9,650	2,210
15.2	11,100	1.0	116	**301L3**		**BE100LA4**	**BX100LA4**	**ME3LA4**	**MX3LA4**	**N180TC**	3,930	4,660	730
15.4	11,000	1.5	114		**303R3**	**BE100LA4**	**BX100LA4**	**ME3LA4**	**MX3LA4**	**N180TC**	7,510	9,480	2,170
15.4	11,000	2.9	114		**305R3**	**BE100LA4**	**BX100LA4**	**ME3LA4**	**MX3LA4**	**N180TC**	7,510	9,480	2,170
15.6	10,800	1.5	113	**303L3**		**BE100LA4**	**BX100LA4**	**ME3LA4**	**MX3LA4**	**N180TC**	7,470	9,440	2,160
15.6	10,800	2.9	113	**305L3**		**BE100LA4**	**BX100LA4**	**ME3LA4**	**MX3LA4**	**N180TC**	7,470	9,440	2,160

Bonfiglioli Riduttori

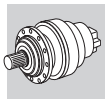

P_1 = 3 hp

n_2 rpm	T_2 lb•in	S	i			IE2	IE3	IE2	IE3	NEMA	Rn_2 [lbs] NHC/HC NPC/PC	HZ/PZ	FZ
15.9	10,600	2.8	111	**304L3**		**BE100LA4**	**BX100LA4**	**ME3LA4**	**MX3LA4**	**N180TC**	7,430	9,380	2,140
16.1	10,200	2.9	109		**304R4**	**BE100LA4**	**BX100LA4**	**ME3LA4**	**MX3LA4**	**N180TC**	7,410	9,360	2,140
16.5	10,200	1.1	106		**301R3**	**BE100LA4**	**BX100LA4**	**ME3LA4**	**MX3LA4**	**N180TC**	3,830	4,540	710
16.6	9,870	1.5	106		**301R4**	**BE100LA4**	**BX100LA4**	**ME3LA4**	**MX3LA4**	**N180TC**	3,820	4,540	700
16.8	10,100	1.5	105	**301L3**		**BE100LA4**	**BX100LA4**	**ME3LA4**	**MX3LA4**	**N180TC**	3,810	4,520	700
16.8	10,000	2.2	105	**303L3**		**BE100LA4**	**BX100LA4**	**ME3LA4**	**MX3LA4**	**N180TC**	7,310	9,230	2,110
18.1	9,320	2.3	97.0		**304R3**	**BE100LA4**	**BX100LA4**	**ME3LA4**	**MX3LA4**	**N180TC**	7,140	9,020	2,050
19.2	8,800	1.8	91.5		**303R3**	**BE100LA4**	**BX100LA4**	**ME3LA4**	**MX3LA4**	**N180TC**	7,020	8,870	2,010
19.5	8,670	2.3	90.2	**303L3**		**BE100LA4**	**BX100LA4**	**ME3LA4**	**MX3LA4**	**N180TC**	6,990	8,830	2,000
20.6	8,230	0.9	85.6	**300L3**		**BE100LA4**	**BX100LA4**	**ME3LA4**	**MX3LA4**	**N180TC**	3,590	4,530	660
20.6	8,230	1.8	85.6	**301L3**		**BE100LA4**	**BX100LA4**	**ME3LA4**	**MX3LA4**	**N180TC**	3,590	4,260	660
20.7	8,190	1.4	85.2		**301R3**	**BE100LA4**	**BX100LA4**	**ME3LA4**	**MX3LA4**	**N180TC**	3,580	4,250	660
22.4	7,560	1.0	78.7		**300R3**	**BE100LA4**	**BX100LA4**	**ME3LA4**	**MX3LA4**	**N180TC**	3,500	4,410	640
22.4	7,560	1.8	78.7		**301R3**	**BE100LA4**	**BX100LA4**	**ME3LA4**	**MX3LA4**	**N180TC**	3,500	4,150	640
22.4	7,570	2.5	78.7		**303R3**	**BE100LA4**	**BX100LA4**	**ME3LA4**	**MX3LA4**	**N180TC**	6,710	8,480	1,920
22.7	7,450	1.0	77.5	**300L3**		**BE100LA4**	**BX100LA4**	**ME3LA4**	**MX3LA4**	**N180TC**	3,480	4,390	640
22.7	7,450	2.0	77.5	**301L3**		**BE100LA4**	**BX100LA4**	**ME3LA4**	**MX3LA4**	**N180TC**	3,480	4,130	640
22.8	7,420	3.0	77.2	**303L3**		**BE100LA4**	**BX100LA4**	**ME3LA4**	**MX3LA4**	**N180TC**	6,670	8,430	1,900
24.0	7,050	2.3	73.3		**303R3**	**BE100LA4**	**BX100LA4**	**ME3LA4**	**MX3LA4**	**N180TC**	6,570	8,300	1,870
24.4	6,950	2.8	72.3	**303L3**		**BE100LA4**	**BX100LA4**	**ME3LA4**	**MX3LA4**	**N180TC**	6,540	8,260	1,860
25.2	6,720	1.7	69.9	**301L3**		**BE100LA4**	**BX100LA4**	**ME3LA4**	**MX3LA4**	**N180TC**	3,370	4,000	610
25.8	6,560	1.8	68.2		**301R3**	**BE100LA4**	**BX100LA4**	**ME3LA4**	**MX3LA4**	**N180TC**	3,350	3,980	610
27.2	6,420	1.6	64.8	**301L2**		**BE100LA4**	**BX100LA4**	**ME3LA4**	**MX3LA4**	**N180TC**	3,300	3,910	600
27.8	6,080	1.2	63.2	**300L3**		**BE100LA4**	**BX100LA4**	**ME3LA4**	**MX3LA4**	**N180TC**	3,270	4,130	590
27.8	6,080	2.4	63.2	**301L3**		**BE100LA4**	**BX100LA4**	**ME3LA4**	**MX3LA4**	**N180TC**	3,270	3,890	590
28	6,050	1.2	62.9		**300R3**	**BE100LA4**	**BX100LA4**	**ME3LA4**	**MX3LA4**	**N180TC**	3,270	4,130	590
28	6,050	2.4	62.9		**301R3**	**BE100LA4**	**BX100LA4**	**ME3LA4**	**MX3LA4**	**N180TC**	3,270	3,880	590
32	5,530	2.9	55.8	**303L2**		**BE100LA4**	**BX100LA4**	**ME3LA4**	**MX3LA4**	**N180TC**	6,050	7,650	1,710
34	5,150	1.1	51.9	**300L2**		**BE100LA4**	**BX100LA4**	**ME3LA4**	**MX3LA4**	**N180TC**	3,090	3,900	560
34	4,960	1.5	51.6	**300L3**		**BE100LA4**	**BX100LA4**	**ME3LA4**	**MX3LA4**	**N180TC**	3,080	3,890	550
34	5,150	2.2	51.9	**301L2**		**BE100LA4**	**BX100LA4**	**ME3LA4**	**MX3LA4**	**N180TC**	3,090	3,660	560
34	4,960	2.9	51.6	**301L3**		**BE100LA4**	**BX100LA4**	**ME3LA4**	**MX3LA4**	**N180TC**	3,080	3,660	550
35	4,850	1.5	50.4		**300R3**	**BE100LA4**	**BX100LA4**	**ME3LA4**	**MX3LA4**	**N180TC**	3,060	3,860	550
35	4,850	2.9	50.4		**301R3**	**BE100LA4**	**BX100LA4**	**ME3LA4**	**MX3LA4**	**N180TC**	3,060	3,630	550
42	4,120	1.4	41.5	**300L2**		**BE100LA4**	**BX100LA4**	**ME3LA4**	**MX3LA4**	**N180TC**	2,890	3,640	520
42	4,120	2.8	41.5	**301L2**		**BE100LA4**	**BX100LA4**	**ME3LA4**	**MX3LA4**	**N180TC**	2,890	3,430	520
43	3,960	1.5	41.2		**300R3**	**BE100LA4**	**BX100LA4**	**ME3LA4**	**MX3LA4**	**N180TC**	2,880	3,630	510
43	3,960	2.9	41.2		**301R3**	**BE100LA4**	**BX100LA4**	**ME3LA4**	**MX3LA4**	**N180TC**	2,880	3,420	510
46	3,800	2.0	38.4	**300L2**		**BE100LA4**	**BX100LA4**	**ME3LA4**	**MX3LA4**	**N180TC**	2,820	3,560	500
47	3,580	2.1	37.3		**300R3**	**BE100LA4**	**BX100LA4**	**ME3LA4**	**MX3LA4**	**N180TC**	2,790	3,530	500
53	3,300	1.7	33.3	**300L2**		**BE100LA4**	**BX100LA4**	**ME3LA4**	**MX3LA4**	**N180TC**	2,700	3,410	480
57	3,040	2.4	30.7	**300L2**		**BE100LA4**	**BX100LA4**	**ME3LA4**	**MX3LA4**	**N180TC**	2,640	3,330	470
58	2,920	2.5	30.4		**300R3**	**BE100LA4**	**BX100LA4**	**ME3LA4**	**MX3LA4**	**N180TC**	2,630	3,320	460
71	2,390	2.7	24.8		**300R3**	**BE100LA4**	**BX100LA4**	**ME3LA4**	**MX3LA4**	**N180TC**	2,470	3,120	430
72	2,440	2.8	24.6	**300L2**		**BE100LA4**	**BX100LA4**	**ME3LA4**	**MX3LA4**	**N180TC**	2,470	3,110	430
88	1,990	2.8	20.1	**300L2**		**BE100LA4**	**BX100LA4**	**ME3LA4**	**MX3LA4**	**N180TC**	2,320	2,930	400
95	1,830	1.8	18.5		**300R2**	**BE100LA4**	**BX100LA4**	**ME3LA4**	**MX3LA4**	**N180TC**	2,260	2,860	390
119	1,460	2.9	14.8		**300R2**	**BE100LA4**	**BX100LA4**	**ME3LA4**	**MX3LA4**	**N180TC**	2,120	2,670	370
196	920	2.9	9.00	**300L1**		**BE100LA4**	**BX100LA4**	**ME3LA4**	**MX3LA4**	**N180TC**	1,820	2,300	310

P_1 = 4 hp

n_2 rpm	T_2 lb•in	S	i			IE2	IE3	IE2	IE3	NEMA	Rn_2 [lbs] NHC/HC NPC/PC	HZ/PZ	FZ
0.80	281,000	1.3	2187	**313ML4**		**BE100LB4**	**BX100LB4**	**ME3LB4**	**MX3LB4**	**N180TC**	38,800	48,600	18,000
0.83	269,400	1.2	2096	**311ML4**		**BE100LB4**	**BX100LB4**	**ME3LB4**	**MX3LB4**	**N180TC**	27,800	29,000	14,600
0.96	233,500	2.2	1817	**313ML4**		**BE100LB4**	**BX100LB4**	**ME3LB4**	**MX3LB4**	**N180TC**	37,800	47,300	18,000
0.98	230,600	0.9	1794	**310ML4**		**BE100LB4**	**BX100LB4**	**ME3LB4**	**MX3LB4**	**N180TC**	21,700	28,100	14,600
0.99	227,000	1.6	1766	**311ML4**		**BE100LB4**	**BX100LB4**	**ME3LB4**	**MX3LB4**	**N180TC**	27,100	28,300	14,600
1.0	214,800	1.0	1672	**310ML4**		**BE100LB4**	**BX100LB4**	**ME3LB4**	**MX3LB4**	**N180TC**	21,500	27,800	14,400
1.0	215,900	1.5	1680	**311ML4**		**BE100LB4**	**BX100LB4**	**ME3LB4**	**MX3LB4**	**N180TC**	26,900	28,100	14,400

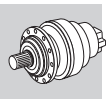

A

P_1 = 4 hp

n_2 rpm	T_2 lb•in	S	i			IE2	IE3	IE2	IE3	NEMA	Rn_2 [lbs] NHC/HC NPC/PC	HZ/PZ	FZ
1.2	184,800	1.1	1438	**310ML4**		**BE100LB4**	**BX100LB4**	**ME3LB4**	**MX3LB4**	**N180TC**	21,100	27,200	13,700
1.2	181,900	2.0	1415	**311ML4**		**BE100LB4**	**BX100LB4**	**ME3LB4**	**MX3LB4**	**N180TC**	26,300	27,400	13,600
1.2	193,000	2.6	1502	**313ML4**		**BE100LB4**	**BX100LB4**	**ME3LB4**	**MX3LB4**	**N180TC**	36,800	46,100	17,100
1.3	179,100	2.5	1394	**313ML4**		**BE100LB4**	**BX100LB4**	**ME3LB4**	**MX3LB4**	**N180TC**	36,400	45,600	16,700
1.4	161,800	1.4	1259	**310ML4**		**BE100LB4**	**BX100LB4**	**ME3LB4**	**MX3LB4**	**N180TC**	20,700	26,700	13,100
1.4	158,100	2.5	1230	**311ML4**		**BE100LB4**	**BX100LB4**	**ME3LB4**	**MX3LB4**	**N180TC**	25,800	26,900	13,000
1.4	162,600	2.9	1266	**313ML4**		**BE100LB4**	**BX100LB4**	**ME3LB4**	**MX3LB4**	**N180TC**	35,900	44,900	16,100
1.5	147,700	0.9	1149	**309L4**		**BE100LB4**	**BX100LB4**	**ME3LB4**	**MX3LB4**	**N180TC**	17,400	23,700	7,030
1.5	149,600	1.7	1164	**310ML4**		**BE100LB4**	**BX100LB4**	**ME3LB4**	**MX3LB4**	**N180TC**	20,400	26,400	12,800
1.7	128,700	1.9	1002	**310ML4**		**BE100LB4**	**BX100LB4**	**ME3LB4**	**MX3LB4**	**N180TC**	20,000	25,800	12,100
1.7	136,000	2.9	1058	**311ML4**		**BE100LB4**	**BX100LB4**	**ME3LB4**	**MX3LB4**	**N180TC**	25,200	26,300	12,400
1.8	128,400	0.9	999	**307L4**		**BE100LB4**	**BX100LB4**	**ME3LB4**	**MX3LB4**	**N180TC**	17,100	23,200	8,390
1.8	128,400	1.3	999	**309L4**		**BE100LB4**	**BX100LB4**	**ME3LB4**	**MX3LB4**	**N180TC**	17,100	23,200	6,710
1.8	125,200	2.2	974	**310ML4**		**BE100LB4**	**BX100LB4**	**ME3LB4**	**MX3LB4**	**N180TC**	19,900	25,700	12,000
1.9	116,500	1.1	906	**307L4**		**BE100LB4**	**BX100LB4**	**ME3LB4**	**MX3LB4**	**N180TC**	16,800	22,900	8,120
1.9	116,500	1.4	906	**309L4**		**BE100LB4**	**BX100LB4**	**ME3LB4**	**MX3LB4**	**N180TC**	16,800	22,900	6,500
1.9	115,400	1.6	898		**310MR4**	**BE100LB4**	**BX100LB4**	**ME3LB4**	**MX3LB4**	**N180TC**	19,700	25,400	11,700
2.2	102,900	1.1	801	**307L4**		**BE100LB4**	**BX100LB4**	**ME3LB4**	**MX3LB4**	**N180TC**	16,500	22,500	7,790
2.2	102,900	1.6	801	**309L4**		**BE100LB4**	**BX100LB4**	**ME3LB4**	**MX3LB4**	**N180TC**	16,500	22,500	6,240
2.2	102,600	2.3	798	**310ML4**		**BE100LB4**	**BX100LB4**	**ME3LB4**	**MX3LB4**	**N180TC**	19,400	25,000	11,200
2.3	97,200	2.3	757		**310MR4**	**BE100LB4**	**BX100LB4**	**ME3LB4**	**MX3LB4**	**N180TC**	19,200	24,800	11,100
2.3	95,900	2.9	746		**311MR4**	**BE100LB4**	**BX100LB4**	**ME3LB4**	**MX3LB4**	**N180TC**	24,000	25,000	11,000
2.4	92,800	1.4	722	**307L4**		**BE100LB4**	**BX100LB4**	**ME3LB4**	**MX3LB4**	**N180TC**	16,300	22,100	7,530
2.4	92,800	2.0	722	**309L4**		**BE100LB4**	**BX100LB4**	**ME3LB4**	**MX3LB4**	**N180TC**	16,300	22,100	6,030
2.4	93,300	2.4	726	**310ML4**		**BE100LB4**	**BX100LB4**	**ME3LB4**	**MX3LB4**	**N180TC**	19,100	24,700	10,900
2.5	89,900	0.9	700	**306L4**		**BE100LB4**	**BX100LB4**	**ME3LB4**	**MX3LB4**	**N180TC**	13,000	16,300	5,800
2.5	88,600	1.0	690		**307R4**	**BE100LB4**	**BX100LB4**	**ME3LB4**	**MX3LB4**	**N180TC**	16,200	22,000	7,420
2.5	88,600	1.4	690		**309R4**	**BE100LB4**	**BX100LB4**	**ME3LB4**	**MX3LB4**	**N180TC**	16,200	22,000	5,930
2.7	84,000	1.3	654	**307L4**		**BE100LB4**	**BX100LB4**	**ME3LB4**	**MX3LB4**	**N180TC**	16,000	21,800	7,290
2.7	84,000	1.9	654	**309L4**		**BE100LB4**	**BX100LB4**	**ME3LB4**	**MX3LB4**	**N180TC**	16,000	21,800	5,830
2.7	81,800	2.7	637	**310ML4**		**BE100LB4**	**BX100LB4**	**ME3LB4**	**MX3LB4**	**N180TC**	18,800	24,200	10,400
2.7	82,100	2.2	639		**310MR4**	**BE100LB4**	**BX100LB4**	**ME3LB4**	**MX3LB4**	**N180TC**	18,800	24,200	10,400
2.8	81,700	1.0	636	**306L4**		**BE100LB4**	**BX100LB4**	**ME3LB4**	**MX3LB4**	**N180TC**	12,800	16,100	5,610
3.0	75,700	1.1	589	**306L4**		**BE100LB4**	**BX100LB4**	**ME3LB4**	**MX3LB4**	**N180TC**	12,600	15,900	5,470
3.0	75,900	1.0	590		**306R4**	**BE100LB4**	**BX100LB4**	**ME3LB4**	**MX3LB4**	**N180TC**	12,600	15,900	5,480
3.0	74,400	1.8	579	**307L4**		**BE100LB4**	**BX100LB4**	**ME3LB4**	**MX3LB4**	**N180TC**	15,800	21,400	7,000
3.0	74,700	1.5	581		**307R4**	**BE100LB4**	**BX100LB4**	**ME3LB4**	**MX3LB4**	**N180TC**	15,800	21,500	7,010
3.0	74,400	2.5	579	**309L4**		**BE100LB4**	**BX100LB4**	**ME3LB4**	**MX3LB4**	**N180TC**	15,800	21,400	5,600
3.0	74,700	1.9	581		**309R4**	**BE100LB4**	**BX100LB4**	**ME3LB4**	**MX3LB4**	**N180TC**	15,800	21,500	5,600
3.0	75,800	2.9	590	**310ML4**		**BE100LB4**	**BX100LB4**	**ME3LB4**	**MX3LB4**	**N180TC**	18,600	24,000	10,200
3.0	75,800	2.3	590		**310MR4**	**BE100LB4**	**BX100LB4**	**ME3LB4**	**MX3LB4**	**N180TC**	18,600	24,000	10,200
3.4	65,400	1.3	509	**306L4**		**BE100LB4**	**BX100LB4**	**ME3LB4**	**MX3LB4**	**N180TC**	12,400	15,600	5,210
3.4	65,400	1.9	509	**307L4**		**BE100LB4**	**BX100LB4**	**ME3LB4**	**MX3LB4**	**N180TC**	15,500	21,100	6,700
3.4	65,400	1.9	509	**309L4**		**BE100LB4**	**BX100LB4**	**ME3LB4**	**MX3LB4**	**N180TC**	15,500	21,100	5,360
3.6	62,700	1.2	488		**306R4**	**BE100LB4**	**BX100LB4**	**ME3LB4**	**MX3LB4**	**N180TC**	12,300	15,500	5,140
3.6	63,000	1.3	490		**307R4**	**BE100LB4**	**BX100LB4**	**ME3LB4**	**MX3LB4**	**N180TC**	15,400	20,900	6,620
3.6	63,000	1.9	490		**309R4**	**BE100LB4**	**BX100LB4**	**ME3LB4**	**MX3LB4**	**N180TC**	15,400	20,900	5,300
3.8	58,400	1.0	455		**306R4**	**BE100LB4**	**BX100LB4**	**ME3LB4**	**MX3LB4**	**N180TC**	12,200	15,400	5,020
3.8	59,700	1.8	465	**307L4**		**BE100LB4**	**BX100LB4**	**ME3LB4**	**MX3LB4**	**N180TC**	15,300	20,800	6,500
3.8	59,700	2.6	465	**309L4**		**BE100LB4**	**BX100LB4**	**ME3LB4**	**MX3LB4**	**N180TC**	15,300	20,800	5,200
3.8	58,700	2.0	457		**309R4**	**BE100LB4**	**BX100LB4**	**ME3LB4**	**MX3LB4**	**N180TC**	15,200	20,700	5,170
3.9	57,100	1.5	444	**306L4**		**BE100LB4**	**BX100LB4**	**ME3LB4**	**MX3LB4**	**N180TC**	12,100	15,300	4,980
3.9	58,200	2.0	453		**307R4**	**BE100LB4**	**BX100LB4**	**ME3LB4**	**MX3LB4**	**N180TC**	15,200	20,700	6,450
3.9	58,400	2.9	454		**310MR4**	**BE100LB4**	**BX100LB4**	**ME3LB4**	**MX3LB4**	**N180TC**	17,900	23,100	9,320
4.2	54,000	1.4	420		**306R4**	**BE100LB4**	**BX100LB4**	**ME3LB4**	**MX3LB4**	**N180TC**	12,000	15,200	4,890
4.2	53,100	1.9	413		**307R4**	**BE100LB4**	**BX100LB4**	**ME3LB4**	**MX3LB4**	**N180TC**	15,000	20,400	6,250
4.2	53,100	2.9	413		**309R4**	**BE100LB4**	**BX100LB4**	**ME3LB4**	**MX3LB4**	**N180TC**	15,000	20,400	5,000
4.3	53,700	0.9	405	**306L3**		**BE100LB4**	**BX100LB4**	**ME3LB4**	**MX3LB4**	**N180TC**	12,000	15,100	4,830
4.3	52,100	2.0	406	**307L4**		**BE100LB4**	**BX100LB4**	**ME3LB4**	**MX3LB4**	**N180TC**	15,000	20,400	6,210
4.3	52,100	3.0	406	**309L4**		**BE100LB4**	**BX100LB4**	**ME3LB4**	**MX3LB4**	**N180TC**	15,000	20,400	4,970
4.5	50,200	1.2	391	**306L4**		**BE100LB4**	**BX100LB4**	**ME3LB4**	**MX3LB4**	**N180TC**	11,900	15,000	4,770
4.5	50,000	1.3	389		**306R4**	**BE100LB4**	**BX100LB4**	**ME3LB4**	**MX3LB4**	**N180TC**	11,900	15,000	4,770
4.7	48,100	2.6	374		**309R4**	**BE100LB4**	**BX100LB4**	**ME3LB4**	**MX3LB4**	**N180TC**	14,800	20,200	4,840
4.8	46,600	2.3	363		**307R4**	**BE100LB4**	**BX100LB4**	**ME3LB4**	**MX3LB4**	**N180TC**	14,800	20,100	5,990
5.0	44,900	2.9	349	**307L4**		**BE100LB4**	**BX100LB4**	**ME3LB4**	**MX3LB4**	**N180TC**	14,700	20,000	5,910

Bonfiglioli Riduttori

P_1 = 4 hp

n_2 rpm	T_2 lb•in	S	i			IE2	IE3	IE2	IE3	NEMA	Rn_2 [lbs] NHC/HC NPC/PC	HZ/PZ	FZ
5.2	43,100	0.9	336		**305R4**	**BE100LB4**	**BX100LB4**	**ME3LB4**	**MX3LB4**	**N180TC**	8,540	10,800	3,110
5.2	44,600	1.7	336	**307L3**		**BE100LB4**	**BX100LB4**	**ME3LB4**	**MX3LB4**	**N180TC**	14,700	20,000	5,840
5.2	44,600	2.6	336	**309L3**		**BE100LB4**	**BX100LB4**	**ME3LB4**	**MX3LB4**	**N180TC**	14,700	20,000	4,670
5.3	42,600	2.3	321		**307R4**	**BE100LB4**	**BX100LB4**	**ME3LB4**	**MX3LB4**	**N180TC**	14,700	20,000	5,810
5.4	43,000	1.1	325	**306L3**		**BE100LB4**	**BX100LB4**	**ME3LB4**	**MX3LB4**	**N180TC**	11,700	14,800	4,490
5.6	40,000	1.7	312		**306R4**	**BE100LB4**	**BX100LB4**	**ME3LB4**	**MX3LB4**	**N180TC**	11,700	14,800	4,430
6.0	37,300	1.3	290		**305R4**	**BE100LB4**	**BX100LB4**	**ME3LB4**	**MX3LB4**	**N180TC**	8,540	10,800	2,960
6.1	38,200	1.3	288	**306L3**		**BE100LB4**	**BX100LB4**	**ME3LB4**	**MX3LB4**	**N180TC**	11,700	14,800	4,310
6.1	37,100	2.0	289		**306R4**	**BE100LB4**	**BX100LB4**	**ME3LB4**	**MX3LB4**	**N180TC**	11,700	14,800	4,320
6.2	37,600	2.6	284	**307L3**		**BE100LB4**	**BX100LB4**	**ME3LB4**	**MX3LB4**	**N180TC**	14,700	20,000	5,510
6.2	36,600	2.7	284		**307R4**	**BE100LB4**	**BX100LB4**	**ME3LB4**	**MX3LB4**	**N180TC**	14,700	20,000	5,520
6.3	36,600	1.1	276	**305L3**		**BE100LB4**	**BX100LB4**	**ME3LB4**	**MX3LB4**	**N180TC**	8,540	10,800	2,920
6.5	34,400	0.9	267		**304R4**	**BE100LB4**	**BX100LB4**	**ME3LB4**	**MX3LB4**	**N180TC**	8,540	10,800	2,880
6.5	35,500	1.4	268	**306L3**		**BE100LB4**	**BX100LB4**	**ME3LB4**	**MX3LB4**	**N180TC**	11,700	14,800	4,210
6.8	34,100	0.9	258	**305L3**		**BE100LB4**	**BX100LB4**	**ME3LB4**	**MX3LB4**	**N180TC**	8,540	10,800	2,850
6.9	32,800	1.0	255		**305R4**	**BE100LB4**	**BX100LB4**	**ME3LB4**	**MX3LB4**	**N180TC**	8,540	10,800	2,840
7.0	31,900	2.3	249		**306R4**	**BE100LB4**	**BX100LB4**	**ME3LB4**	**MX3LB4**	**N180TC**	11,700	14,800	4,110
7.3	31,700	2.4	239	**307L3**		**BE100LB4**	**BX100LB4**	**ME3LB4**	**MX3LB4**	**N180TC**	14,700	20,000	5,210
7.4	31,500	2.3	238	**306L3**		**BE100LB4**	**BX100LB4**	**ME3LB4**	**MX3LB4**	**N180TC**	11,700	14,800	4,050
7.6	29,700	1.1	231		**305R4**	**BE100LB4**	**BX100LB4**	**ME3LB4**	**MX3LB4**	**N180TC**	8,540	10,800	2,750
7.6	29,600	2.3	230		**306R4**	**BE100LB4**	**BX100LB4**	**ME3LB4**	**MX3LB4**	**N180TC**	11,700	14,800	4,000
7.7	29,100	1.1	227		**304R4**	**BE100LB4**	**BX100LB4**	**ME3LB4**	**MX3LB4**	**N180TC**	8,540	10,800	2,730
7.9	29,200	1.1	220	**304L3**		**BE100LB4**	**BX100LB4**	**ME3LB4**	**MX3LB4**	**N180TC**	8,540	10,800	2,700
7.9	29,200	1.4	220	**305L3**		**BE100LB4**	**BX100LB4**	**ME3LB4**	**MX3LB4**	**N180TC**	8,540	10,800	2,700
7.9	29,400	2.0	222	**306L3**		**BE100LB4**	**BX100LB4**	**ME3LB4**	**MX3LB4**	**N180TC**	11,700	14,800	3,950
8.2	27,500	1.2	214		**304R4**	**BE100LB4**	**BX100LB4**	**ME3LB4**	**MX3LB4**	**N180TC**	8,540	10,800	2,680
8.2	27,500	1.7	214		**305R4**	**BE100LB4**	**BX100LB4**	**ME3LB4**	**MX3LB4**	**N180TC**	8,540	10,800	2,680
8.5	27,100	2.6	205	**306L3**		**BE100LB4**	**BX100LB4**	**ME3LB4**	**MX3LB4**	**N180TC**	11,700	14,800	3,850
9.2	25,200	1.3	190	**305L3**		**BE100LB4**	**BX100LB4**	**ME3LB4**	**MX3LB4**	**N180TC**	8,540	10,800	2,580
9.2	25,100	2.3	190	**306L3**		**BE100LB4**	**BX100LB4**	**ME3LB4**	**MX3LB4**	**N180TC**	11,700	14,800	3,750
9.5	23,800	1.3	185		**304R4**	**BE100LB4**	**BX100LB4**	**ME3LB4**	**MX3LB4**	**N180TC**	8,540	10,800	2,550
9.5	23,800	1.7	185		**305R4**	**BE100LB4**	**BX100LB4**	**ME3LB4**	**MX3LB4**	**N180TC**	8,540	10,800	2,550
9.9	23,500	1.1	178	**304L3**		**BE100LB4**	**BX100LB4**	**ME3LB4**	**MX3LB4**	**N180TC**	8,540	10,800	2,520
9.9	23,500	1.7	178	**305L3**		**BE100LB4**	**BX100LB4**	**ME3LB4**	**MX3LB4**	**N180TC**	8,540	10,800	2,520
10.6	21,800	1.0	165	**304L3**		**BE100LB4**	**BX100LB4**	**ME3LB4**	**MX3LB4**	**N180TC**	8,390	10,600	2,450
10.7	21,700	1.8	164	**305L3**		**BE100LB4**	**BX100LB4**	**ME3LB4**	**MX3LB4**	**N180TC**	8,370	10,600	2,450
11.1	20,300	1.1	158		**303R4**	**BE100LB4**	**BX100LB4**	**ME3LB4**	**MX3LB4**	**N180TC**	8,290	10,500	2,420
11.1	20,300	1.5	158		**304R4**	**BE100LB4**	**BX100LB4**	**ME3LB4**	**MX3LB4**	**N180TC**	8,290	10,500	2,420
11.1	20,300	2.3	158		**305R4**	**BE100LB4**	**BX100LB4**	**ME3LB4**	**MX3LB4**	**N180TC**	8,290	10,500	2,420
11.5	20,200	1.6	152	**305L3**		**BE100LB4**	**BX100LB4**	**ME3LB4**	**MX3LB4**	**N180TC**	8,200	10,400	2,390
11.7	19,800	1.5	150	**304L3**		**BE100LB4**	**BX100LB4**	**ME3LB4**	**MX3LB4**	**N180TC**	8,150	10,300	2,380
11.8	19,000	1.1	148		**303R4**	**BE100LB4**	**BX100LB4**	**ME3LB4**	**MX3LB4**	**N180TC**	8,130	10,300	2,370
11.8	19,000	1.6	148		**304R4**	**BE100LB4**	**BX100LB4**	**ME3LB4**	**MX3LB4**	**N180TC**	8,130	10,300	2,370
11.8	19,000	2.1	148		**305R4**	**BE100LB4**	**BX100LB4**	**ME3LB4**	**MX3LB4**	**N180TC**	8,130	10,300	2,370
12.1	19,100	2.5	144		**306R3**	**BE100LB4**	**BX100LB4**	**ME3LB4**	**MX3LB4**	**N180TC**	11,100	14,000	3,420
12.4	18,700	1.2	141	**303L3**		**BE100LB4**	**BX100LB4**	**ME3LB4**	**MX3LB4**	**N180TC**	8,010	10,100	2,330
12.4	18,700	1.7	141	**304L3**		**BE100LB4**	**BX100LB4**	**ME3LB4**	**MX3LB4**	**N180TC**	8,010	10,100	2,330
12.4	18,700	2.4	141	**305L3**		**BE100LB4**	**BX100LB4**	**ME3LB4**	**MX3LB4**	**N180TC**	8,010	10,100	2,330
13.4	17,300	1.8	130	**304L3**		**BE100LB4**	**BX100LB4**	**ME3LB4**	**MX3LB4**	**N180TC**	7,820	9,880	2,270
13.5	16,700	0.9	130		**301R4**	**BE100LB4**	**BX100LB4**	**ME3LB4**	**MX3LB4**	**N180TC**	4,070	4,830	760
13.5	16,600	1.4	129		**303R4**	**BE100LB4**	**BX100LB4**	**ME3LB4**	**MX3LB4**	**N180TC**	7,800	9,850	2,260
13.5	16,600	1.9	129		**304R4**	**BE100LB4**	**BX100LB4**	**ME3LB4**	**MX3LB4**	**N180TC**	7,800	9,850	2,260
13.5	16,600	2.7	129		**305R4**	**BE100LB4**	**BX100LB4**	**ME3LB4**	**MX3LB4**	**N180TC**	7,800	9,850	2,260
14.1	16,500	1.0	124	**303L3**		**BE100LB4**	**BX100LB4**	**ME3LB4**	**MX3LB4**	**N180TC**	7,710	9,740	2,240
14.1	16,500	1.9	124	**305L3**		**BE100LB4**	**BX100LB4**	**ME3LB4**	**MX3LB4**	**N180TC**	7,710	9,740	2,240
14.4	16,100	1.3	121		**304R3**	**BE100LB4**	**BX100LB4**	**ME3LB4**	**MX3LB4**	**N180TC**	7,650	9,670	2,220
15.3	15,200	1.1	114		**303R3**	**BE100LB4**	**BX100LB4**	**ME3LB4**	**MX3LB4**	**N180TC**	7,520	9,500	2,170
15.3	15,200	2.1	114		**305R3**	**BE100LB4**	**BX100LB4**	**ME3LB4**	**MX3LB4**	**N180TC**	7,520	9,500	2,170
15.5	14,900	1.1	113	**303L3**		**BE100LB4**	**BX100LB4**	**ME3LB4**	**MX3LB4**	**N180TC**	7,490	9,460	2,160
15.5	14,900	2.1	113	**305L3**		**BE100LB4**	**BX100LB4**	**ME3LB4**	**MX3LB4**	**N180TC**	7,490	9,460	2,160
15.8	14,600	2.0	111	**304L3**		**BE100LB4**	**BX100LB4**	**ME3LB4**	**MX3LB4**	**N180TC**	7,440	9,400	2,150
16.0	14,100	2.1	109		**304R4**	**BE100LB4**	**BX100LB4**	**ME3LB4**	**MX3LB4**	**N180TC**	7,420	9,370	2,140
16.5	13,600	1.1	106		**301R4**	**BE100LB4**	**BX100LB4**	**ME3LB4**	**MX3LB4**	**N180TC**	3,830	4,540	710
16.7	13,900	1.1	105	**301L3**		**BE100LB4**	**BX100LB4**	**ME3LB4**	**MX3LB4**	**N180TC**	3,820	4,530	700
16.7	13,800	1.6	105	**303L3**		**BE100LB4**	**BX100LB4**	**ME3LB4**	**MX3LB4**	**N180TC**	7,320	9,250	2,110

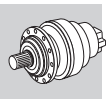

A

P_1 = 4 hp

n_2 rpm	T_2 lb•in	S	i			IE2	IE3	IE2	IE3	NEMA	Rn_2 [lbs] NHC/HC NPC/PC	HZ/PZ	FZ
16.7	13,800	2.2	105	**304L3**		**BE100LB4**	**BX100LB4**	**ME3LB4**	**MX3LB4**	**N180TC**	7,320	9,250	2,110
18.0	12,800	1.6	97.0		**304R3**	**BE100LB4**	**BX100LB4**	**ME3LB4**	**MX3LB4**	**N180TC**	7,160	9,040	2,060
19.1	12,100	1.3	91.5		**303R3**	**BE100LB4**	**BX100LB4**	**ME3LB4**	**MX3LB4**	**N180TC**	7,030	8,880	2,020
19.1	12,100	2.6	91.5		**305R3**	**BE100LB4**	**BX100LB4**	**ME3LB4**	**MX3LB4**	**N180TC**	7,030	8,880	2,020
19.4	11,900	1.7	90.2	**303L3**		**BE100LB4**	**BX100LB4**	**ME3LB4**	**MX3LB4**	**N180TC**	7,000	8,850	2,010
19.4	11,900	2.4	90.2	**304L3**		**BE100LB4**	**BX100LB4**	**ME3LB4**	**MX3LB4**	**N180TC**	7,000	8,850	2,010
19.6	11,500	2.5	89.4		**304R4**	**BE100LB4**	**BX100LB4**	**ME3LB4**	**MX3LB4**	**N180TC**	6,980	8,820	2,000
20.4	11,300	1.3	85.6	**301L3**		**BE100LB4**	**BX100LB4**	**ME3LB4**	**MX3LB4**	**N180TC**	3,590	4,260	660
20.6	11,300	1.0	85.2		**301R3**	**BE100LB4**	**BX100LB4**	**ME3LB4**	**MX3LB4**	**N180TC**	3,590	4,260	660
22.2	10,400	1.3	78.7		**301R3**	**BE100LB4**	**BX100LB4**	**ME3LB4**	**MX3LB4**	**N180TC**	3,500	4,160	640
22.2	10,400	1.8	78.7		**303R3**	**BE100LB4**	**BX100LB4**	**ME3LB4**	**MX3LB4**	**N180TC**	6,720	8,490	1,920
22.2	10,400	2.4	78.7		**304R3**	**BE100LB4**	**BX100LB4**	**ME3LB4**	**MX3LB4**	**N180TC**	6,720	8,490	1,920
22.6	10,300	1.4	77.5	**301L3**		**BE100LB4**	**BX100LB4**	**ME3LB4**	**MX3LB4**	**N180TC**	3,490	4,140	640
22.7	10,200	2.2	77.2	**303L3**		**BE100LB4**	**BX100LB4**	**ME3LB4**	**MX3LB4**	**N180TC**	6,680	8,440	1,910
22.7	10,300	3.0	77.2	**304L3**		**BE100LB4**	**BX100LB4**	**ME3LB4**	**MX3LB4**	**N180TC**	6,680	8,440	1,910
23.9	9,710	1.7	73.3		**303R3**	**BE100LB4**	**BX100LB4**	**ME3LB4**	**MX3LB4**	**N180TC**	6,580	8,310	1,870
24.2	9,570	2.0	72.3	**303L3**		**BE100LB4**	**BX100LB4**	**ME3LB4**	**MX3LB4**	**N180TC**	6,550	8,280	1,860
24.2	9,640	3.0	72.3	**304L3**		**BE100LB4**	**BX100LB4**	**ME3LB4**	**MX3LB4**	**N180TC**	6,550	8,280	1,860
25.0	9,260	1.2	69.9	**301L3**		**BE100LB4**	**BX100LB4**	**ME3LB4**	**MX3LB4**	**N180TC**	3,380	4,010	610
25.6	9,040	1.3	68.2		**301R3**	**BE100LB4**	**BX100LB4**	**ME3LB4**	**MX3LB4**	**N180TC**	3,360	3,980	610
27.0	8,850	1.2	64.8	**301L2**		**BE100LB4**	**BX100LB4**	**ME3LB4**	**MX3LB4**	**N180TC**	3,300	3,920	600
27.7	8,380	1.7	63.2	**301L3**		**BE100LB4**	**BX100LB4**	**ME3LB4**	**MX3LB4**	**N180TC**	3,280	3,890	590
27.7	8,360	2.3	63.1		**303R3**	**BE100LB4**	**BX100LB4**	**ME3LB4**	**MX3LB4**	**N180TC**	6,290	7,950	1,780
27.7	8,410	3.0	63.1		**304R3**	**BE100LB4**	**BX100LB4**	**ME3LB4**	**MX3LB4**	**N180TC**	6,290	7,950	1,780
27.8	8,340	1.7	62.9		**301R3**	**BE100LB4**	**BX100LB4**	**ME3LB4**	**MX3LB4**	**N180TC**	3,280	3,890	590
27.8	8,350	2.6	63.1	**303L3**		**BE100LB4**	**BX100LB4**	**ME3LB4**	**MX3LB4**	**N180TC**	6,290	7,940	1,780
29.6	8,080	2.6	59.1	**304L2**		**BE100LB4**	**BX100LB4**	**ME3LB4**	**MX3LB4**	**N180TC**	6,170	7,790	1,740
31	7,620	2.1	55.8	**303L2**		**BE100LB4**	**BX100LB4**	**ME3LB4**	**MX3LB4**	**N180TC**	6,060	7,660	1,710
32	7,180	2.2	54.2		**303R3**	**BE100LB4**	**BX100LB4**	**ME3LB4**	**MX3LB4**	**N180TC**	6,010	7,590	1,690
33	7,080	2.7	53.4	**303L3**		**BE100LB4**	**BX100LB4**	**ME3LB4**	**MX3LB4**	**N180TC**	5,980	7,560	1,690
34	6,840	1.1	51.6	**300L3**		**BE100LB4**	**BX100LB4**	**ME3LB4**	**MX3LB4**	**N180TC**	3,090	3,900	560
34	7,090	1.6	51.9	**301L2**		**BE100LB4**	**BX100LB4**	**ME3LB4**	**MX3LB4**	**N180TC**	3,090	3,670	560
34	6,840	2.1	51.6	**301L3**		**BE100LB4**	**BX100LB4**	**ME3LB4**	**MX3LB4**	**N180TC**	3,090	3,660	560
35	6,680	1.1	50.4		**300R3**	**BE100LB4**	**BX100LB4**	**ME3LB4**	**MX3LB4**	**N180TC**	3,060	3,870	550
35	6,680	2.1	50.4		**301R3**	**BE100LB4**	**BX100LB4**	**ME3LB4**	**MX3LB4**	**N180TC**	3,060	3,640	550
39	6,100	2.6	44.6	**303L2**		**BE100LB4**	**BX100LB4**	**ME3LB4**	**MX3LB4**	**N180TC**	5,670	7,160	1,590
42	5,670	1.0	41.5	**300L2**		**BE100LB4**	**BX100LB4**	**ME3LB4**	**MX3LB4**	**N180TC**	2,890	3,650	520
42	5,670	2.0	41.5	**301L2**		**BE100LB4**	**BX100LB4**	**ME3LB4**	**MX3LB4**	**N180TC**	2,890	3,430	520
43	5,450	1.1	41.2		**300R3**	**BE100LB4**	**BX100LB4**	**ME3LB4**	**MX3LB4**	**N180TC**	2,880	3,640	520
43	5,450	2.1	41.2		**301R3**	**BE100LB4**	**BX100LB4**	**ME3LB4**	**MX3LB4**	**N180TC**	2,880	3,420	520
46	5,240	1.4	38.4	**300L2**		**BE100LB4**	**BX100LB4**	**ME3LB4**	**MX3LB4**	**N180TC**	2,820	3,560	500
46	5,240	2.6	38.4	**301L2**		**BE100LB4**	**BX100LB4**	**ME3LB4**	**MX3LB4**	**N180TC**	2,820	3,350	500
47	4,940	1.5	37.3		**300R3**	**BE100LB4**	**BX100LB4**	**ME3LB4**	**MX3LB4**	**N180TC**	2,800	3,530	500
47	4,940	2.8	37.3		**301R3**	**BE100LB4**	**BX100LB4**	**ME3LB4**	**MX3LB4**	**N180TC**	2,800	3,320	500
53	4,550	1.3	33.3	**300L2**		**BE100LB4**	**BX100LB4**	**ME3LB4**	**MX3LB4**	**N180TC**	2,710	3,420	480
53	4,550	2.5	33.3	**301L2**		**BE100LB4**	**BX100LB4**	**ME3LB4**	**MX3LB4**	**N180TC**	2,710	3,210	480
57	4,190	1.7	30.7	**300L2**		**BE100LB4**	**BX100LB4**	**ME3LB4**	**MX3LB4**	**N180TC**	2,640	3,330	470
58	4,030	1.8	30.4		**300R3**	**BE100LB4**	**BX100LB4**	**ME3LB4**	**MX3LB4**	**N180TC**	2,630	3,320	470
70	3,290	2.0	24.8		**300R3**	**BE100LB4**	**BX100LB4**	**ME3LB4**	**MX3LB4**	**N180TC**	2,480	3,130	440
71	3,360	2.0	24.6	**300L2**		**BE100LB4**	**BX100LB4**	**ME3LB4**	**MX3LB4**	**N180TC**	2,470	3,120	430
71	3,380	2.2	24.8		**303R2**	**BE100LB4**	**BX100LB4**	**ME3LB4**	**MX3LB4**	**N180TC**	4,750	6,000	1,310
87	2,740	2.0	20.1	**300L2**		**BE100LB4**	**BX100LB4**	**ME3LB4**	**MX3LB4**	**N180TC**	2,320	2,940	410
95	2,520	1.3	18.5		**300R2**	**BE100LB4**	**BX100LB4**	**ME3LB4**	**MX3LB4**	**N180TC**	2,270	2,860	390
95	2,520	2.6	18.5		**301R2**	**BE100LB4**	**BX100LB4**	**ME3LB4**	**MX3LB4**	**N180TC**	2,270	2,690	390
96	2,480	2.6	18.2	**300L2**		**BE100LB4**	**BX100LB4**	**ME3LB4**	**MX3LB4**	**N180TC**	2,260	2,850	390
118	2,030	3.0	14.8	**300L2**		**BE100LB4**	**BX100LB4**	**ME3LB4**	**MX3LB4**	**N180TC**	2,120	2,680	370
119	2,020	2.1	14.8		**300R2**	**BE100LB4**	**BX100LB4**	**ME3LB4**	**MX3LB4**	**N180TC**	2,120	2,680	370
194	1,270	2.1	9.00	**300L1**		**BE100LB4**	**BX100LB4**	**ME3LB4**	**MX3LB4**	**N180TC**	1,830	2,310	310

Bonfiglioli Riduttori

P_1 = 5 hp

n_2 rpm	T_2 lb•in	S	i			IE2	IE3	IE2	IE3	NEMA	Rn_2 [lbs] NHC/HC NPC/PC	HZ/PZ	FZ
0.80	344,400	1.0	2187	**313ML4**		**BE112M4**	**BX112M4**	**ME4SA4**	**MX4SA4**	**N180TC**	38,800	48,600	18,000
0.84	330,200	1.0	2096	**311ML4**		**BE112M4**	**BX112M4**	**ME4SA4**	**MX4SA4**	**N180TC**	27,800	29,000	14,600
0.97	286,100	1.8	1817	**313ML4**		**BE112M4**	**BX112M4**	**ME4SA4**	**MX4SA4**	**N180TC**	37,800	47,300	18,000
1.0	264,600	1.2	1680	**311ML4**		**BE112M4**	**BX112M4**	**ME4SA4**	**MX4SA4**	**N180TC**	26,900	28,100	14,400
1.0	278,200	1.3	1766	**311ML4**		**BE112M4**	**BX112M4**	**ME4SA4**	**MX4SA4**	**N180TC**	27,100	28,300	14,600
1.2	226,500	0.9	1438	**310ML4**		**BE112M4**	**BX112M4**	**ME4SA4**	**MX4SA4**	**N180TC**	21,100	27,200	13,700
1.2	222,900	1.6	1415	**311ML4**		**BE112M4**	**BX112M4**	**ME4SA4**	**MX4SA4**	**N180TC**	26,300	27,400	13,600
1.2	236,500	2.1	1502	**313ML4**		**BE112M4**	**BX112M4**	**ME4SA4**	**MX4SA4**	**N180TC**	36,800	46,000	17,100
1.3	219,500	2.0	1394	**313ML4**		**BE112M4**	**BX112M4**	**ME4SA4**	**MX4SA4**	**N180TC**	36,400	45,500	16,600
1.4	198,300	1.1	1259	**310ML4**		**BE112M4**	**BX112M4**	**ME4SA4**	**MX4SA4**	**N180TC**	20,700	26,700	13,100
1.4	193,800	2.1	1230	**311ML4**		**BE112M4**	**BX112M4**	**ME4SA4**	**MX4SA4**	**N180TC**	25,800	26,900	13,000
1.4	199,300	2.4	1266	**313ML4**		**BE112M4**	**BX112M4**	**ME4SA4**	**MX4SA4**	**N180TC**	35,900	44,900	16,100
1.5	183,400	1.4	1164	**310ML4**		**BE112M4**	**BX112M4**	**ME4SA4**	**MX4SA4**	**N180TC**	20,400	26,400	12,700
1.6	175,900	2.5	1117	**313ML4**		**BE112M4**	**BX112M4**	**ME4SA4**	**MX4SA4**	**N180TC**	35,200	44,100	15,500
1.7	166,700	2.3	1058	**311ML4**		**BE112M4**	**BX112M4**	**ME4SA4**	**MX4SA4**	**N180TC**	25,200	26,300	12,300
1.7	159,700	2.9	1014	**313ML4**		**BE112M4**	**BX112M4**	**ME4SA4**	**MX4SA4**	**N180TC**	34,800	43,500	15,000
1.8	157,400	1.0	999	**309L4**		**BE112M4**	**BX112M4**	**ME4SA4**	**MX4SA4**	**N180TC**	17,000	23,200	6,700
1.8	153,400	1.8	974	**310ML4**		**BE112M4**	**BX112M4**	**ME4SA4**	**MX4SA4**	**N180TC**	19,900	25,700	12,000
1.8	157,700	1.5	1002	**310ML4**		**BE112M4**	**BX112M4**	**ME4SA4**	**MX4SA4**	**N180TC**	20,000	25,800	12,100
1.8	155,300	2.5	986	**311ML4**		**BE112M4**	**BX112M4**	**ME4SA4**	**MX4SA4**	**N180TC**	25,000	26,000	12,000
1.9	142,700	0.9	906	**307L4**		**BE112M4**	**BX112M4**	**ME4SA4**	**MX4SA4**	**N180TC**	16,800	22,900	8,110
1.9	142,700	1.1	906	**309L4**		**BE112M4**	**BX112M4**	**ME4SA4**	**MX4SA4**	**N180TC**	16,800	22,900	6,490
2.0	141,400	1.3	898		**310MR4**	**BE112M4**	**BX112M4**	**ME4SA4**	**MX4SA4**	**N180TC**	19,700	25,400	11,700
2.1	129,900	2.9	825	**311ML4**		**BE112M4**	**BX112M4**	**ME4SA4**	**MX4SA4**	**N180TC**	24,300	25,400	11,300
2.2	126,100	0.9	801	**307L4**		**BE112M4**	**BX112M4**	**ME4SA4**	**MX4SA4**	**N180TC**	16,500	22,400	7,780
2.2	126,100	1.3	801	**309L4**		**BE112M4**	**BX112M4**	**ME4SA4**	**MX4SA4**	**N180TC**	16,500	22,400	6,220
2.2	125,700	1.8	798	**310ML4**		**BE112M4**	**BX112M4**	**ME4SA4**	**MX4SA4**	**N180TC**	19,400	25,000	11,200
2.3	119,200	1.8	757		**310MR4**	**BE112M4**	**BX112M4**	**ME4SA4**	**MX4SA4**	**N180TC**	19,200	24,800	11,000
2.3	122,600	2.5	778		**313MR4**	**BE112M4**	**BX112M4**	**ME4SA4**	**MX4SA4**	**N180TC**	33,500	41,900	13,700
2.4	113,700	1.2	722	**307L4**		**BE112M4**	**BX112M4**	**ME4SA4**	**MX4SA4**	**N180TC**	16,300	22,100	7,520
2.4	113,700	1.7	722	**309L4**		**BE112M4**	**BX112M4**	**ME4SA4**	**MX4SA4**	**N180TC**	16,300	22,100	6,010
2.4	114,300	2.0	726	**310ML4**		**BE112M4**	**BX112M4**	**ME4SA4**	**MX4SA4**	**N180TC**	19,100	24,700	10,900
2.4	117,500	2.4	746		**311MR4**	**BE112M4**	**BX112M4**	**ME4SA4**	**MX4SA4**	**N180TC**	24,000	25,000	11,000
2.6	108,600	1.2	690		**309R4**	**BE112M4**	**BX112M4**	**ME4SA4**	**MX4SA4**	**N180TC**	16,200	22,000	5,920
2.7	102,900	1.1	654	**307L4**		**BE112M4**	**BX112M4**	**ME4SA4**	**MX4SA4**	**N180TC**	16,000	21,800	7,270
2.7	102,900	1.5	654	**309L4**		**BE112M4**	**BX112M4**	**ME4SA4**	**MX4SA4**	**N180TC**	16,000	21,800	5,820
2.8	100,300	2.2	637	**310ML4**		**BE112M4**	**BX112M4**	**ME4SA4**	**MX4SA4**	**N180TC**	18,700	24,200	10,400
2.8	100,600	1.8	639		**310MR4**	**BE112M4**	**BX112M4**	**ME4SA4**	**MX4SA4**	**N180TC**	18,800	24,200	10,400
3.0	91,100	1.4	579	**307L4**		**BE112M4**	**BX112M4**	**ME4SA4**	**MX4SA4**	**N180TC**	15,800	21,400	6,980
3.0	91,500	1.2	581		**307R4**	**BE112M4**	**BX112M4**	**ME4SA4**	**MX4SA4**	**N180TC**	15,800	21,400	6,990
3.0	91,100	2.1	579	**309L4**		**BE112M4**	**BX112M4**	**ME4SA4**	**MX4SA4**	**N180TC**	15,800	21,400	5,590
3.0	91,500	1.5	581		**309R4**	**BE112M4**	**BX112M4**	**ME4SA4**	**MX4SA4**	**N180TC**	15,800	21,400	5,590
3.0	92,900	2.4	590	**310ML4**		**BE112M4**	**BX112M4**	**ME4SA4**	**MX4SA4**	**N180TC**	18,500	23,900	10,100
3.0	92,900	1.8	590		**310MR4**	**BE112M4**	**BX112M4**	**ME4SA4**	**MX4SA4**	**N180TC**	18,500	23,900	10,100
3.4	81,400	2.6	517		**310MR4**	**BE112M4**	**BX112M4**	**ME4SA4**	**MX4SA4**	**N180TC**	18,200	23,500	9,710
3.5	80,200	1.0	509	**306L4**		**BE112M4**	**BX112M4**	**ME4SA4**	**MX4SA4**	**N180TC**	12,400	15,600	5,200
3.5	80,200	1.5	509	**307L4**		**BE112M4**	**BX112M4**	**ME4SA4**	**MX4SA4**	**N180TC**	15,500	21,000	6,690
3.5	80,200	1.6	509	**309L4**		**BE112M4**	**BX112M4**	**ME4SA4**	**MX4SA4**	**N180TC**	15,500	21,000	5,350
3.5	79,900	2.7	507	**310ML4**		**BE112M4**	**BX112M4**	**ME4SA4**	**MX4SA4**	**N180TC**	18,100	23,400	9,650
3.6	76,900	1.0	488		**306R4**	**BE112M4**	**BX112M4**	**ME4SA4**	**MX4SA4**	**N180TC**	12,300	15,500	5,130
3.6	77,200	1.0	490		**307R4**	**BE112M4**	**BX112M4**	**ME4SA4**	**MX4SA4**	**N180TC**	15,400	20,900	6,610
3.6	77,200	1.6	490		**309R4**	**BE112M4**	**BX112M4**	**ME4SA4**	**MX4SA4**	**N180TC**	15,400	20,900	5,290
3.8	73,200	1.4	465	**307L4**		**BE112M4**	**BX112M4**	**ME4SA4**	**MX4SA4**	**N180TC**	15,300	20,800	6,490
3.8	73,200	2.1	465	**309L4**		**BE112M4**	**BX112M4**	**ME4SA4**	**MX4SA4**	**N180TC**	15,300	20,800	5,190
3.9	71,300	1.6	453		**307R4**	**BE112M4**	**BX112M4**	**ME4SA4**	**MX4SA4**	**N180TC**	15,200	20,700	6,430
3.9	72,000	1.7	457		**309R4**	**BE112M4**	**BX112M4**	**ME4SA4**	**MX4SA4**	**N180TC**	15,200	20,700	5,160
3.9	71,500	2.3	454		**310MR4**	**BE112M4**	**BX112M4**	**ME4SA4**	**MX4SA4**	**N180TC**	17,900	23,100	9,300
4.0	70,000	1.2	444	**306L4**		**BE112M4**	**BX112M4**	**ME4SA4**	**MX4SA4**	**N180TC**	12,100	15,300	4,970
4.2	66,100	1.1	420		**306R4**	**BE112M4**	**BX112M4**	**ME4SA4**	**MX4SA4**	**N180TC**	12,000	15,200	4,880
4.3	63,900	1.6	406	**307L4**		**BE112M4**	**BX112M4**	**ME4SA4**	**MX4SA4**	**N180TC**	15,000	20,400	6,200

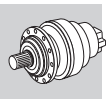

A

P_1 = 5 hp

n_2 rpm	T_2 lb•in	S	i			IE2	IE3	IE2	IE3	NEMA	Rn_2 [lbs] NHC/HC NPC/PC	HZ/PZ	FZ
4.3	65,100	1.6	413		**307R4**	**BE112M4**	**BX112M4**	**ME4SA4**	**MX4SA4**	**N180TC**	15,000	20,400	6,240
4.3	63,900	2.4	406	**309L4**		**BE112M4**	**BX112M4**	**ME4SA4**	**MX4SA4**	**N180TC**	15,000	20,400	4,960
4.3	65,100	2.4	413		**309R4**	**BE112M4**	**BX112M4**	**ME4SA4**	**MX4SA4**	**N180TC**	15,000	20,400	4,990
4.5	61,600	1.0	391	**306L4**		**BE112M4**	**BX112M4**	**ME4SA4**	**MX4SA4**	**N180TC**	11,900	15,000	4,770
4.5	61,300	1.1	389		**306R4**	**BE112M4**	**BX112M4**	**ME4SA4**	**MX4SA4**	**N180TC**	11,900	15,000	4,760
4.5	61,700	2.6	392	**310ML4**		**BE112M4**	**BX112M4**	**ME4SA4**	**MX4SA4**	**N180TC**	17,500	22,600	8,860
4.7	59,000	2.1	374		**309R4**	**BE112M4**	**BX112M4**	**ME4SA4**	**MX4SA4**	**N180TC**	14,800	20,100	4,830
4.9	57,100	1.9	363		**307R4**	**BE112M4**	**BX112M4**	**ME4SA4**	**MX4SA4**	**N180TC**	14,700	20,000	5,980
5.0	55,000	2.4	349	**307L4**		**BE112M4**	**BX112M4**	**ME4SA4**	**MX4SA4**	**N180TC**	14,700	20,000	5,900
5.2	54,600	1.4	336	**307L3**		**BE112M4**	**BX112M4**	**ME4SA4**	**MX4SA4**	**N180TC**	14,700	20,000	5,830
5.2	54,600	2.1	336	**309L3**		**BE112M4**	**BX112M4**	**ME4SA4**	**MX4SA4**	**N180TC**	14,700	20,000	4,660
5.3	52,200	1.9	321		**307R4**	**BE112M4**	**BX112M4**	**ME4SA4**	**MX4SA4**	**N180TC**	14,700	20,000	5,800
5.3	52,200	2.9	321		**309R4**	**BE112M4**	**BX112M4**	**ME4SA4**	**MX4SA4**	**N180TC**	14,700	20,000	4,640
5.4	52,700	0.9	325	**306L3**		**BE112M4**	**BX112M4**	**ME4SA4**	**MX4SA4**	**N180TC**	11,700	14,800	4,480
5.6	49,100	1.4	312		**306R4**	**BE112M4**	**BX112M4**	**ME4SA4**	**MX4SA4**	**N180TC**	11,700	14,800	4,420
5.9	47,200	2.6	300		**307R4**	**BE112M4**	**BX112M4**	**ME4SA4**	**MX4SA4**	**N180TC**	14,700	20,000	5,610
6.1	45,700	1.0	290		**305R4**	**BE112M4**	**BX112M4**	**ME4SA4**	**MX4SA4**	**N180TC**	8,540	10,800	2,960
6.1	46,800	1.0	288	**306L3**		**BE112M4**	**BX112M4**	**ME4SA4**	**MX4SA4**	**N180TC**	11,700	14,800	4,300
6.1	45,500	1.6	289		**306R4**	**BE112M4**	**BX112M4**	**ME4SA4**	**MX4SA4**	**N180TC**	11,700	14,800	4,310
6.2	46,000	2.1	284	**307L3**		**BE112M4**	**BX112M4**	**ME4SA4**	**MX4SA4**	**N180TC**	14,700	20,000	5,500
6.2	44,800	2.2	284		**307R4**	**BE112M4**	**BX112M4**	**ME4SA4**	**MX4SA4**	**N180TC**	14,700	20,000	5,510
6.2	46,000	3.0	284	**309L3**		**BE112M4**	**BX112M4**	**ME4SA4**	**MX4SA4**	**N180TC**	14,700	20,000	4,400
6.6	43,600	1.1	268	**306L3**		**BE112M4**	**BX112M4**	**ME4SA4**	**MX4SA4**	**N180TC**	11,700	14,800	4,200
7.1	39,200	1.8	249		**306R4**	**BE112M4**	**BX112M4**	**ME4SA4**	**MX4SA4**	**N180TC**	11,700	14,800	4,100
7.4	38,700	1.9	238	**306L3**		**BE112M4**	**BX112M4**	**ME4SA4**	**MX4SA4**	**N180TC**	11,700	14,800	4,040
7.4	38,800	2.0	239	**307L3**		**BE112M4**	**BX112M4**	**ME4SA4**	**MX4SA4**	**N180TC**	14,700	20,000	5,200
7.4	38,800	3.0	239	**309L3**		**BE112M4**	**BX112M4**	**ME4SA4**	**MX4SA4**	**N180TC**	14,700	20,000	4,160
7.6	36,300	1.9	230		**306R4**	**BE112M4**	**BX112M4**	**ME4SA4**	**MX4SA4**	**N180TC**	11,700	14,800	3,990
7.6	36,600	2.7	232		**307R4**	**BE112M4**	**BX112M4**	**ME4SA4**	**MX4SA4**	**N180TC**	14,700	20,000	5,150
7.9	36,000	1.6	222	**306L3**		**BE112M4**	**BX112M4**	**ME4SA4**	**MX4SA4**	**N180TC**	11,700	14,800	3,940
8.0	35,800	1.2	220	**305L3**		**BE112M4**	**BX112M4**	**ME4SA4**	**MX4SA4**	**N180TC**	8,540	10,800	2,700
8.2	33,700	0.9	214		**304R4**	**BE112M4**	**BX112M4**			**N180TC**	8,540	10,800	2,670
8.2	33,700	1.4	214		**305R4**	**BE112M4**	**BX112M4**	**ME4SA4**	**MX4SA4**	**N180TC**	8,540	10,800	2,670
8.2	33,600	2.5	214		**306R4**	**BE112M4**	**BX112M4**	**ME4SA4**	**MX4SA4**	**N180TC**	11,700	14,800	3,900
8.6	33,300	2.1	205	**306L3**		**BE112M4**	**BX112M4**	**ME4SA4**	**MX4SA4**	**N180TC**	11,700	14,800	3,840
8.7	32,700	2.9	202	**307L3**		**BE112M4**	**BX112M4**	**ME4SA4**	**MX4SA4**	**N180TC**	14,700	20,000	4,910
9.2	30,900	1.0	190	**305L3**		**BE112M4**	**BX112M4**	**ME4SA4**	**MX4SA4**	**N180TC**	8,540	10,800	2,570
9.3	30,800	1.9	190	**306L3**		**BE112M4**	**BX112M4**	**ME4SA4**	**MX4SA4**	**N180TC**	11,700	14,800	3,740
9.5	29,100	1.0	185		**304R4**	**BE112M4**	**BX112M4**			**N180TC**	8,540	10,800	2,550
9.5	29,100	1.4	185		**305R4**	**BE112M4**	**BX112M4**	**ME4SA4**	**MX4SA4**	**N180TC**	8,540	10,800	2,550
9.7	28,500	2.9	181		**306R4**	**BE112M4**	**BX112M4**	**ME4SA4**	**MX4SA4**	**N180TC**	11,700	14,800	3,690
9.9	28,800	1.4	178	**305L3**		**BE112M4**	**BX112M4**	**ME4SA4**	**MX4SA4**	**N180TC**	8,540	10,800	2,510
10.5	26,400	2.5	168		**306R4**	**BE112M4**	**BX112M4**	**ME4SA4**	**MX4SA4**	**N180TC**	11,600	14,600	3,590
10.8	26,600	1.5	164	**305L3**		**BE112M4**	**BX112M4**	**ME4SA4**	**MX4SA4**	**N180TC**	8,360	10,600	2,440
11.1	24,900	0.9	158		**303R4**	**BE112M4**	**BX112M4**			**N180TC**	8,280	10,500	2,420
11.1	24,900	1.3	158		**304R4**	**BE112M4**	**BX112M4**			**N180TC**	8,280	10,500	2,420
11.1	24,900	1.9	158		**305R4**	**BE112M4**	**BX112M4**	**ME4SA4**	**MX4SA4**	**N180TC**	8,280	10,500	2,420
11.5	24,800	1.3	152	**305L3**		**BE112M4**	**BX112M4**	**ME4SA4**	**MX4SA4**	**N180TC**	8,180	10,300	2,390
11.6	24,700	2.7	152	**306L3**		**BE112M4**	**BX112M4**	**ME4SA4**	**MX4SA4**	**N180TC**	11,200	14,200	3,480
11.8	24,300	1.2	150	**304L3**		**BE112M4**	**BX112M4**	**ME4SA4**	**MX4SA4**	**N180TC**	8,140	10,300	2,370
11.9	23,300	1.3	148		**304R4**	**BE112M4**	**BX112M4**			**N180TC**	8,110	10,200	2,360
11.9	23,300	1.7	148		**305R4**	**BE112M4**	**BX112M4**	**ME4SA4**	**MX4SA4**	**N180TC**	8,110	10,200	2,360
12.2	23,400	2.1	144		**306R3**	**BE112M4**	**BX112M4**	**ME4SA4**	**MX4SA4**	**N180TC**	11,100	13,900	3,420
12.4	23,000	1.0	141	**303L3**		**BE112M4**	**BX112M4**	**ME4SA4**	**MX4SA4**	**N180TC**	8,000	10,100	2,330
12.4	23,000	1.4	141	**304L3**		**BE112M4**	**BX112M4**	**ME4SA4**	**MX4SA4**	**N180TC**	8,000	10,100	2,330
12.4	23,000	1.9	141	**305L3**		**BE112M4**	**BX112M4**	**ME4SA4**	**MX4SA4**	**N180TC**	8,000	10,100	2,330
12.5	23,200	3.0	141	**306L3**		**BE112M4**	**BX112M4**	**ME4SA4**	**MX4SA4**	**N180TC**	11,000	13,800	3,390
13.5	21,200	1.5	130	**304L3**		**BE112M4**	**BX112M4**	**ME4SA4**	**MX4SA4**	**N180TC**	7,810	9,860	2,270
13.6	20,400	1.1	129		**303R4**	**BE112M4**	**BX112M4**			**N180TC**	7,790	9,840	2,260
13.6	20,400	1.5	129		**304R4**	**BE112M4**	**BX112M4**			**N180TC**	7,790	9,840	2,260

Bonfiglioli Riduttori

P_1 = 5 hp

n_2 rpm	T_2 lb•in	S	i			IE2	IE3	IE2	IE3	NEMA	Rn_2 [lbs] NHC/HC NPC/PC	HZ/PZ	FZ
13.6	20,400	2.2	129		**305R4**	**BE112M4**	**BX112M4**	**ME4SA4**	**MX4SA4**	**N180TC**	7,790	9,840	2,260
14.1	20,200	1.6	124	**305L3**		**BE112M4**	**BX112M4**	**ME4SA4**	**MX4SA4**	**N180TC**	7,700	9,730	2,230
14.5	19,700	1.1	121		**304R3**	**BE112M4**	**BX112M4**			**N180TC**	7,640	9,650	2,210
14.8	19,300	3.0	119		**306R3**	**BE112M4**	**BX112M4**	**ME4SA4**	**MX4SA4**	**N180TC**	10,400	13,200	3,210
15.4	18,600	1.7	114		**305R3**	**BE112M4**	**BX112M4**	**ME4SA4**	**MX4SA4**	**N180TC**	7,510	9,480	2,170
15.6	18,300	1.7	113	**305L3**		**BE112M4**	**BX112M4**	**ME4SA4**	**MX4SA4**	**N180TC**	7,470	9,440	2,160
15.9	17,900	1.6	111	**304L3**		**BE112M4**	**BX112M4**	**ME4SA4**	**MX4SA4**	**N180TC**	7,430	9,380	2,140
16.1	17,200	1.7	109		**304R4**	**BE112M4**	**BX112M4**			**N180TC**	7,410	9,360	2,140
16.8	17,000	1.3	105	**303L3**		**BE112M4**	**BX112M4**	**ME4SA4**	**MX4SA4**	**N180TC**	7,310	9,230	2,110
16.8	17,000	1.8	105	**304L3**		**BE112M4**	**BX112M4**	**ME4SA4**	**MX4SA4**	**N180TC**	7,310	9,230	2,110
16.8	17,000	2.6	105	**305L3**		**BE112M4**	**BX112M4**	**ME4SA4**	**MX4SA4**	**N180TC**	7,310	9,230	2,110
18.1	15,700	1.3	97.0		**304R3**	**BE112M4**	**BX112M4**			**N180TC**	7,140	9,020	2,050
19.2	14,900	1.1	91.5		**303R3**	**BE112M4**	**BX112M4**			**N180TC**	7,020	8,870	2,010
19.2	14,900	2.1	91.5		**305R3**	**BE112M4**	**BX112M4**	**ME4SA4**	**MX4SA4**	**N180TC**	7,020	8,870	2,010
19.5	14,600	1.3	90.2	**303L3**		**BE112M4**	**BX112M4**	**ME4SA4**	**MX4SA4**	**N180TC**	6,990	8,830	2,000
19.5	14,600	2.0	90.2	**304L3**		**BE112M4**	**BX112M4**	**ME4SA4**	**MX4SA4**	**N180TC**	6,990	8,830	2,000
19.5	14,600	2.5	90.2	**305L3**		**BE112M4**	**BX112M4**	**ME4SA4**	**MX4SA4**	**N180TC**	6,990	8,830	2,000
19.7	14,100	2.1	89.4		**304R4**	**BE112M4**	**BX112M4**			**N180TC**	6,970	8,810	2,000
20.6	13,900	1.1	85.6	**301L3**		**BE112M4**	**BX112M4**	**ME4SA4**	**MX4SA4**	**N180TC**	3,590	4,260	660
22.4	12,800	1.1	78.7		**301R3**	**BE112M4**	**BX112M4**			**N180TC**	3,500	4,150	640
22.4	12,800	1.5	78.7		**303R3**	**BE112M4**	**BX112M4**			**N180TC**	6,710	8,480	1,920
22.4	12,800	2.0	78.7		**304R3**	**BE112M4**	**BX112M4**			**N180TC**	6,710	8,480	1,920
22.4	13,000	3.0	78.7		**305R3**	**BE112M4**	**BX112M4**	**ME4SA4**	**MX4SA4**	**N180TC**	6,710	8,480	1,920
22.7	12,600	1.2	77.5	**301L3**		**BE112M4**	**BX112M4**	**ME4SA4**	**MX4SA4**	**N180TC**	3,480	4,130	640
22.8	12,500	1.8	77.2	**303L3**		**BE112M4**	**BX112M4**	**ME4SA4**	**MX4SA4**	**N180TC**	6,670	8,430	1,900
22.8	12,500	2.5	77.2	**304L3**		**BE112M4**	**BX112M4**	**ME4SA4**	**MX4SA4**	**N180TC**	6,670	8,430	1,900
24.0	11,900	1.4	73.3		**303R3**	**BE112M4**	**BX112M4**			**N180TC**	6,570	8,300	1,870
24.0	11,900	2.7	73.3		**305R3**	**BE112M4**	**BX112M4**	**ME4SA4**	**MX4SA4**	**N180TC**	6,570	8,300	1,870
24.4	11,700	1.7	72.3	**303L3**		**BE112M4**	**BX112M4**	**ME4SA4**	**MX4SA4**	**N180TC**	6,540	8,260	1,860
24.4	11,700	2.5	72.3	**304L3**		**BE112M4**	**BX112M4**	**ME4SA4**	**MX4SA4**	**N180TC**	6,540	8,260	1,860
25.2	11,300	1.0	69.9	**301L3**		**BE112M4**	**BX112M4**	**ME4SA4**	**MX4SA4**	**N180TC**	3,370	4,000	610
25.8	11,100	1.0	68.2		**301R3**	**BE112M4**	**BX112M4**			**N180TC**	3,350	3,980	610
27.2	10,800	0.9	64.8	**301L2**		**BE112M4**	**BX112M4**	**ME4SA4**	**MX4SA4**	**N180TC**	3,300	3,910	600
27.8	10,300	1.4	63.2	**301L3**		**BE112M4**	**BX112M4**	**ME4SA4**	**MX4SA4**	**N180TC**	3,270	3,890	590
27.9	10,200	2.1	63.1	**303L3**		**BE112M4**	**BX112M4**	**ME4SA4**	**MX4SA4**	**N180TC**	6,280	7,930	1,780
27.9	10,200	1.9	63.1		**303R3**	**BE112M4**	**BX112M4**			**N180TC**	6,280	7,930	1,780
27.9	10,200	3.0	63.1	**304L3**		**BE112M4**	**BX112M4**	**ME4SA4**	**MX4SA4**	**N180TC**	6,280	7,930	1,780
27.9	10,200	2.5	63.1		**304R3**	**BE112M4**	**BX112M4**			**N180TC**	6,280	7,930	1,780
28.0	10,200	1.4	62.9		**301R3**	**BE112M4**	**BX112M4**			**N180TC**	3,270	3,880	590
29.8	9,900	2.1	59.1	**304L2**		**BE112M4**	**BX112M4**	**ME4SA4**	**MX4SA4**	**N180TC**	6,160	7,780	1,740
32	9,340	1.7	55.8	**303L2**		**BE112M4**	**BX112M4**	**ME4SA4**	**MX4SA4**	**N180TC**	6,050	7,650	1,710
32	8,800	1.8	54.2		**303R3**	**BE112M4**	**BX112M4**			**N180TC**	6,000	7,580	1,690
33	8,670	2.2	53.4	**303L3**		**BE112M4**	**BX112M4**	**ME4SA4**	**MX4SA4**	**N180TC**	5,970	7,550	1,680
34	8,690	1.3	51.9	**301L2**		**BE112M4**	**BX112M4**	**ME4SA4**	**MX4SA4**	**N180TC**	3,090	3,660	560
34	8,380	1.7	51.6	**301L3**		**BE112M4**	**BX112M4**	**ME4SA4**	**MX4SA4**	**N180TC**	3,080	3,660	550
35	8,190	0.9	50.4		**300R3**	**BE112M4**	**BX112M4**			**N180TC**	3,060	3,860	550
35	8,190	1.7	50.4		**301R3**	**BE112M4**	**BX112M4**			**N180TC**	3,060	3,630	550
35	8,160	2.5	50.3		**303R3**	**BE112M4**	**BX112M4**			**N180TC**	5,870	7,410	1,650
37	7,920	2.7	47.3	**304L2**		**BE112M4**	**BX112M4**	**ME4SA4**	**MX4SA4**	**N180TC**	5,760	7,280	1,620
38	7,570	2.5	46.6		**303R3**	**BE112M4**	**BX112M4**			**N180TC**	5,730	7,240	1,610
39	7,470	2.2	44.6	**303L2**		**BE112M4**	**BX112M4**	**ME4SA4**	**MX4SA4**	**N180TC**	5,660	7,150	1,590
41	6,910	2.6	42.6		**303R3**	**BE112M4**	**BX112M4**			**N180TC**	5,580	7,050	1,560
42	6,950	1.7	41.5	**301L2**		**BE112M4**	**BX112M4**	**ME4SA4**	**MX4SA4**	**N180TC**	2,890	3,430	520
43	6,680	1.7	41.2		**301R3**	**BE112M4**	**BX112M4**			**N180TC**	2,880	3,420	510
46	6,420	1.2	38.4	**300L2**		**BE112M4**	**BX112M4**	**ME4SA4**	**MX4SA4**	**N180TC**	2,820	3,560	500
46	6,420	2.1	38.4	**301L2**		**BE112M4**	**BX112M4**	**ME4SA4**	**MX4SA4**	**N180TC**	2,820	3,350	500
46	6,430	3.0	38.4	**303L2**		**BE112M4**	**BX112M4**	**ME4SA4**	**MX4SA4**	**N180TC**	5,410	6,830	1,510
47	6,050	1.2	37.3		**300R3**	**BE112M4**	**BX112M4**			**N180TC**	2,790	3,530	500
47	6,050	2.3	37.3		**301R3**	**BE112M4**	**BX112M4**			**N180TC**	2,790	3,320	500
49	5,990	2.7	35.8	**303L2**		**BE112M4**	**BX112M4**	**ME4SA4**	**MX4SA4**	**N180TC**	5,300	6,690	1,470

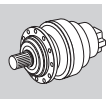

A

P_1 = 5 hp

n_2 rpm	T_2 lb•in	S	i			IE2	IE3	IE2	IE3	NEMA	Rn_2 [lbs] NHC/HC NPC/PC	HZ/PZ	FZ
53	5,570	1.0	33.3	**300L2**		**BE112M4**	**BX112M4**	**ME4SA4**	**MX4SA4**	**N180TC**	2,700	3,410	480
53	5,570	2.1	33.3	**301L2**		**BE112M4**	**BX112M4**	**ME4SA4**	**MX4SA4**	**N180TC**	2,700	3,210	480
57	5,140	1.4	30.7	**300L2**		**BE112M4**	**BX112M4**	**ME4SA4**	**MX4SA4**	**N180TC**	2,640	3,330	470
57	5,140	2.6	30.7	**301L2**		**BE112M4**	**BX112M4**	**ME4SA4**	**MX4SA4**	**N180TC**	2,640	3,130	470
58	4,940	1.5	30.4		**300R3**	**BE112M4**	**BX112M4**			**N180TC**	2,630	3,320	460
58	4,940	2.7	30.4		**301R3**	**BE112M4**	**BX112M4**			**N180TC**	2,630	3,120	460
71	4,030	1.6	24.8		**300R3**	**BE112M4**	**BX112M4**			**N180TC**	2,470	3,120	430
71	4,030	3.0	24.8		**301R3**	**BE112M4**	**BX112M4**			**N180TC**	2,470	2,940	430
71	4,150	1.8	24.8		**303R2**	**BE112M4**	**BX112M4**	**ME4SA4**	**MX4SA4**	**N180TC**	4,740	5,990	1,300
72	4,120	1.7	24.6	**300L2**		**BE112M4**	**BX112M4**	**ME4SA4**	**MX4SA4**	**N180TC**	2,470	3,110	430
88	3,360	1.7	20.1	**300L2**		**BE112M4**	**BX112M4**	**ME4SA4**	**MX4SA4**	**N180TC**	2,320	2,930	400
95	3,090	1.1	18.5		**300R2**	**BE112M4**	**BX112M4**	**ME4SA4**	**MX4SA4**	**N180TC**	2,260	2,860	390
95	3,090	2.1	18.5		**301R2**	**BE112M4**	**BX112M4**	**ME4SA4**	**MX4SA4**	**N180TC**	2,260	2,690	390
97	3,040	2.1	18.2	**300L2**		**BE112M4**	**BX112M4**	**ME4SA4**	**MX4SA4**	**N180TC**	2,250	2,840	390
119	2,480	2.4	14.8	**300L2**		**BE112M4**	**BX112M4**	**ME4SA4**	**MX4SA4**	**N180TC**	2,120	2,680	370
119	2,470	1.7	14.8		**300R2**	**BE112M4**	**BX112M4**	**ME4SA4**	**MX4SA4**	**N180TC**	2,120	2,670	370
145	2,030	2.8	12.1	**300L2**		**BE112M4**	**BX112M4**	**ME4SA4**	**MX4SA4**	**N180TC**	1,990	2,520	340
149	1,980	2.5	11.8		**300R2**	**BE112M4**	**BX112M4**	**ME4SA4**	**MX4SA4**	**N180TC**	1,980	2,500	340
196	1,550	1.7	9.00	**300L1**		**BE112M4**	**BX112M4**	**ME4SA4**	**MX4SA4**	**N180TC**	1,820	2,300	310
244	1,240	2.8	7.20	**300L1**		**BE112M4**	**BX112M4**	**ME4SA4**	**MX4SA4**	**N180TC**	1,710	2,150	290

P_1 = 7.5 hp

n_2 rpm	T_2 lb•in	S	i			IE2	IE3	IE2	IE3	NEMA	Rn_2 [lbs] NHC/HC NPC/PC	HZ/PZ	FZ
0.97	422,800	1.2	1817	**313ML4**		**BE132S4**	**BX132SB4**	**ME4SB4**	**MX4SB4**	**N210TC**	37,700	47,300	18,000
0.98	420,100	1.7	1805	**315ML4**		**BE132S4**	**BX132SB4**	**ME4SB4**	**MX4SB4**		36,800	44,900	20,200
0.99	418,000	1.3	1796	**314ML4**		**BE132S4**	**BX132SB4**	**ME4SB4**	**MX4SB4**		36,800	44,900	20,200
1.1	361,400	3.0	1553	**316ML4**		**BE132S4**	**BX132SB4**	**ME4SB4**	**MX4SB4**		56,100	62,900	32,300
1.2	349,500	1.4	1502	**313ML4**		**BE132S4**	**BX132SB4**	**ME4SB4**	**MX4SB4**	**N210TC**	36,700	46,000	17,000
1.2	345,600	1.6	1485	**314ML4**		**BE132S4**	**BX132SB4**	**ME4SB4**	**MX4SB4**		35,800	43,700	19,100
1.2	347,300	2.0	1492	**315ML4**		**BE132S4**	**BX132SB4**	**ME4SB4**	**MX4SB4**		35,800	43,700	19,100
1.3	329,400	1.1	1415	**311ML4**		**BE132S4**	**BX132SB4**	**ME4SB4**	**MX4SB4**	**N210TC**	26,300	27,400	13,600
1.3	324,400	1.4	1394	**313ML4**		**BE132S4**	**BX132SB4**	**ME4SB4**	**MX4SB4**	**N210TC**	36,300	45,500	16,600
1.4	286,300	1.4	1230	**311ML4**		**BE132S4**	**BX132SB4**	**ME4SB4**	**MX4SB4**	**N210TC**	25,700	26,900	12,900
1.4	294,500	1.6	1266	**313ML4**		**BE132S4**	**BX132SB4**	**ME4SB4**	**MX4SB4**	**N210TC**	35,800	44,900	16,100
1.4	297,300	2.1	1269	**314ML4**		**BE132S4**	**BX132SB4**	**ME4SB4**	**MX4SB4**		35,000	42,700	18,100
1.4	298,700	2.6	1284	**315ML4**		**BE132S4**	**BX132SB4**	**ME4SB4**	**MX4SB4**		35,000	42,800	18,200
1.5	270,900	0.9	1164	**310ML4**		**BE132S4**	**BX132SB4**	**ME4SB4**	**MX4SB4**	**N210TC**	20,400	26,400	12,700
1.6	259,900	1.7	1117	**313ML4**		**BE132S4**	**BX132SB4**	**ME4SB4**	**MX4SB4**	**N210TC**	35,200	44,100	15,400
1.6	255,700	2.4	1099	**314ML4**		**BE132S4**	**BX132SB4**	**ME4SB4**	**MX4SB4**		34,300	41,800	17,300
1.7	246,300	1.6	1058	**311ML4**		**BE132S4**	**BX132SB4**	**ME4SB4**	**MX4SB4**	**N210TC**	25,200	26,300	12,300
1.7	236,000	1.9	1014	**313ML4**		**BE132S4**	**BX132SB4**	**ME4SB4**	**MX4SB4**	**N210TC**	34,700	43,500	14,900
1.7	241,400	2.7	1038	**314ML4**		**BE132S4**	**BX132SB4**	**ME4SB4**	**MX4SB4**		34,000	41,500	16,900
1.8	226,700	1.2	974	**310ML4**		**BE132S4**	**BX132SB4**	**ME4SB4**	**MX4SB4**	**N210TC**	19,900	25,700	12,000
1.8	233,100	1.0	1002	**310ML4**		**BE132S4**	**BX132SB4**	**ME4SB4**	**MX4SB4**	**N210TC**	20,000	25,800	12,100
1.8	229,400	1.7	986	**311ML4**		**BE132S4**	**BX132SB4**	**ME4SB4**	**MX4SB4**	**N210TC**	24,900	26,000	12,000
1.9	215,500	2.8	926	**314ML4**		**BE132S4**	**BX132SB4**	**ME4SB4**	**MX4SB4**		33,500	40,800	16,300
1.9	211,600	2.9	909		**315MR4**	**BE132S4**	**BX132SB4**	**ME4SB4**	**MX4SB4**	**N210TC**	33,400	40,700	16,200
2.0	207,000	2.2	889	**313ML4**		**BE132S4**	**BX132SB4**	**ME4SB4**	**MX4SB4**	**N210TC**	34,100	42,700	14,300
2.1	191,900	2.0	825	**311ML4**		**BE132S4**	**BX132SB4**	**ME4SB4**	**MX4SB4**	**N210TC**	24,300	25,400	11,300
2.2	185,700	1.2	798	**310ML4**		**BE132S4**	**BX132SB4**	**ME4SB4**	**MX4SB4**	**N210TC**	19,300	25,000	11,200
2.2	183,800	2.4	790	**313ML4**		**BE132S4**	**BX132SB4**	**ME4SB4**	**MX4SB4**	**N210TC**	33,500	42,000	13,700
2.3	176,100	1.2	757		**310MR4**	**BE132S4**	**BX132SB4**	**ME4SB4**	**MX4SB4**	**N210TC**	19,200	24,800	11,000
2.3	181,100	1.7	778		**313MR4**	**BE132S4**	**BX132SB4**	**ME4SB4**	**MX4SB4**	**N210TC**	33,400	41,900	13,700
2.4	168,900	1.3	726	**310ML4**		**BE132S4**	**BX132SB4**	**ME4SB4**	**MX4SB4**	**N210TC**	19,100	24,600	10,900

P_1 = 7.5 hp

n_2 rpm	T_2 lb•in	S	i			IE2	IE3	IE2	IE3	NEMA	Rn_2 [lbs] NHC/HC NPC/PC	HZ/PZ	FZ
2.4	173,600	1.6	746		**311MR4**	**BE132S4**	**BX132SB4**	**ME4SB4**	**MX4SB4**	**N210TC**	24,000	25,000	11,000
2.5	168,100	1.1	722	**309L4**		**BE132S4**	**BX132SB4**	**ME4SB4**	**MX4SB4**	**N210TC**	16,300	22,100	6,000
2.5	161,800	2.7	695	**313ML4**		**BE132S4**	**BX132SB4**	**ME4SB4**	**MX4SB4**	**N210TC**	32,900	41,200	13,200
2.7	152,100	1.0	654	**309L4**		**BE132S4**	**BX132SB4**	**ME4SB4**	**MX4SB4**	**N210TC**	16,000	21,800	5,810
2.7	150,500	2.8	647		**313MR4**	**BE132S4**	**BX132SB4**	**ME4SB4**	**MX4SB4**	**N210TC**	32,600	40,800	12,900
2.8	148,200	1.5	637	**310ML4**		**BE132S4**	**BX132SB4**	**ME4SB4**	**MX4SB4**	**N210TC**	18,700	24,200	10,400
2.8	148,600	1.2	639		**310MR4**	**BE132S4**	**BX132SB4**	**ME4SB4**	**MX4SB4**	**N210TC**	18,700	24,200	10,400
2.8	145,800	2.5	627	**311ML4**		**BE132S4**	**BX132SB4**	**ME4SB4**	**MX4SB4**	**N210TC**	23,400	24,400	10,300
2.8	146,300	2.4	629		**311MR4**	**BE132S4**	**BX132SB4**	**ME4SB4**	**MX4SB4**	**N210TC**	23,400	24,400	10,300
2.8	147,300	2.9	633	**313ML4**		**BE132S4**	**BX132SB4**	**ME4SB4**	**MX4SB4**	**N210TC**	32,500	40,600	12,800
3.0	135,200	1.0	581		**309R4**	**BE132S4**	**BX132SB4**	**ME4SB4**	**MX4SB4**	**N210TC**	15,800	21,400	5,580
3.0	137,200	1.6	590	**310ML4**		**BE132S4**	**BX132SB4**	**ME4SB4**	**MX4SB4**	**N210TC**	18,500	23,900	10,100
3.0	137,200	1.2	590		**310MR4**	**BE132S4**	**BX132SB4**	**ME4SB4**	**MX4SB4**	**N210TC**	18,500	23,900	10,100
3.1	134,700	1.0	579	**307L4**		**BE132S4**	**BX132SB4**	**ME4SB4**	**MX4SB4**	**N210TC**	15,700	21,400	6,970
3.1	134,700	1.4	579	**309L4**		**BE132S4**	**BX132SB4**	**ME4SB4**	**MX4SB4**	**N210TC**	15,700	21,400	5,580
3.1	132,100	2.7	568	**311ML4**		**BE132S4**	**BX132SB4**	**ME4SB4**	**MX4SB4**	**N210TC**	23,000	24,000	10,000
3.4	120,300	1.8	517		**310MR4**	**BE132S4**	**BX132SB4**	**ME4SB4**	**MX4SB4**	**N210TC**	18,200	23,500	9,700
3.4	120,900	2.9	520		**311MR4**	**BE132S4**	**BX132SB4**	**ME4SB4**	**MX4SB4**	**N210TC**	22,800	23,700	9,710
3.5	118,500	1.0	509	**307L4**		**BE132S4**	**BX132SB4**	**ME4SB4**	**MX4SB4**	**N210TC**	15,500	21,000	6,680
3.5	118,500	1.1	509	**309L4**		**BE132S4**	**BX132SB4**	**ME4SB4**	**MX4SB4**	**N210TC**	15,500	21,000	5,340
3.5	118,100	1.8	507	**310ML4**		**BE132S4**	**BX132SB4**	**ME4SB4**	**MX4SB4**	**N210TC**	18,100	23,400	9,630
3.6	114,100	1.1	490		**309R4**	**BE132S4**	**BX132SB4**	**ME4SB4**	**MX4SB4**	**N210TC**	15,400	20,900	5,280
3.6	114,000	2.5	490		**311MR4**	**BE132S4**	**BX132SB4**	**ME4SB4**	**MX4SB4**	**N210TC**	22,600	23,500	9,520
3.8	108,200	1.0	465	**307L4**		**BE132S4**	**BX132SB4**	**ME4SB4**	**MX4SB4**	**N210TC**	15,300	20,800	6,480
3.8	108,200	1.5	465	**309L4**		**BE132S4**	**BX132SB4**	**ME4SB4**	**MX4SB4**	**N210TC**	15,300	20,800	5,180
3.9	105,400	1.1	453		**307R4**	**BE132S4**	**BX132SB4**	**ME4SB4**	**MX4SB4**	**N210TC**	15,200	20,700	6,420
3.9	106,300	1.1	457		**309R4**	**BE132S4**	**BX132SB4**	**ME4SB4**	**MX4SB4**	**N210TC**	15,200	20,700	5,150
3.9	105,500	2.4	453	**310ML4**		**BE132S4**	**BX132SB4**	**ME4SB4**	**MX4SB4**	**N210TC**	17,800	23,000	9,280
3.9	105,700	1.6	454		**310MR4**	**BE132S4**	**BX132SB4**	**ME4SB4**	**MX4SB4**	**N210TC**	17,800	23,000	9,290
4.3	96,200	1.1	413		**307R4**	**BE132S4**	**BX132SB4**	**ME4SB4**	**MX4SB4**	**N210TC**	15,000	20,400	6,230
4.3	96,200	1.6	413		**309R4**	**BE132S4**	**BX132SB4**	**ME4SB4**	**MX4SB4**	**N210TC**	15,000	20,400	4,980
4.4	94,400	1.1	406	**307L4**		**BE132S4**	**BX132SB4**	**ME4SB4**	**MX4SB4**	**N210TC**	15,000	20,400	6,190
4.4	94,400	1.6	406	**309L4**		**BE132S4**	**BX132SB4**	**ME4SB4**	**MX4SB4**	**N210TC**	15,000	20,400	4,950
4.5	91,100	1.8	392	**310ML4**		**BE132S4**	**BX132SB4**	**ME4SB4**	**MX4SB4**	**N210TC**	17,500	22,600	8,840
4.6	89,100	2.3	383		**310MR4**	**BE132S4**	**BX132SB4**	**ME4SB4**	**MX4SB4**	**N210TC**	17,400	22,500	8,770
4.7	87,100	1.5	374		**309R4**	**BE132S4**	**BX132SB4**	**ME4SB4**	**MX4SB4**	**N210TC**	14,800	20,100	4,820
4.9	84,400	1.3	363		**307R4**	**BE132S4**	**BX132SB4**	**ME4SB4**	**MX4SB4**	**N210TC**	14,700	20,000	5,970
5.1	81,200	1.6	349	**307L4**		**BE132S4**	**BX132SB4**	**ME4SB4**	**MX4SB4**	**N210TC**	14,700	20,000	5,890
5.1	81,200	2.3	349	**309L4**		**BE132S4**	**BX132SB4**	**ME4SB4**	**MX4SB4**	**N210TC**	14,700	20,000	4,710
5.1	84,100	1.9	350	**310ML3**		**BE132S4**	**BX132SB4**	**ME4SB4**	**MX4SB4**		17,200	22,200	8,520
5.3	80,700	1.0	336	**307L3**		**BE132S4**	**BX132SB4**	**ME4SB4**	**MX4SB4**	**N210TC**	14,700	20,000	5,820
5.3	77,100	1.3	321		**307R4**	**BE132S4**	**BX132SB4**	**ME4SB4**	**MX4SB4**	**N210TC**	14,700	20,000	5,790
5.3	80,700	1.4	336	**309L3**		**BE132S4**	**BX132SB4**	**ME4SB4**	**MX4SB4**	**N210TC**	14,700	20,000	4,650
5.3	77,100	1.9	321		**309R4**	**BE132S4**	**BX132SB4**	**ME4SB4**	**MX4SB4**	**N210TC**	14,700	20,000	4,630
5.7	72,500	0.9	312		**306R4**	**BE132S4**	**BX132SB4**	**ME4SB4**	**MX4SB4**	**N210TC**	11,700	14,800	4,410
5.8	71,000	2.8	305		**310MR4**	**BE132S4**	**BX132SB4**	**ME4SB4**	**MX4SB4**	**N210TC**	17,200	22,200	8,130
5.9	69,800	1.8	300		**307R4**	**BE132S4**	**BX132SB4**	**ME4SB4**	**MX4SB4**	**N210TC**	14,700	20,000	5,600
6.0	70,800	2.8	295	**310ML3**		**BE132S4**	**BX132SB4**	**ME4SB4**	**MX4SB4**		17,200	22,200	8,040
6.1	67,300	1.1	289		**306R4**	**BE132S4**	**BX132SB4**	**ME4SB4**	**MX4SB4**	**N210TC**	11,700	14,800	4,300
6.2	68,000	1.4	284	**307L3**		**BE132S4**	**BX132SB4**	**ME4SB4**	**MX4SB4**	**N210TC**	14,700	20,000	5,490
6.2	66,200	1.5	284		**307R4**	**BE132S4**	**BX132SB4**	**ME4SB4**	**MX4SB4**	**N210TC**	14,700	20,000	5,500
6.2	68,000	2.0	284	**309L3**		**BE132S4**	**BX132SB4**	**ME4SB4**	**MX4SB4**	**N210TC**	14,700	20,000	4,400
6.2	66,200	2.2	284		**309R4**	**BE132S4**	**BX132SB4**	**ME4SB4**	**MX4SB4**	**N210TC**	14,700	20,000	4,400
6.9	60,100	2.1	258		**307R4**	**BE132S4**	**BX132SB4**	**ME4SB4**	**MX4SB4**	**N210TC**	14,700	20,000	5,320
6.9	60,100	2.6	258		**309R4**	**BE132S4**	**BX132SB4**	**ME4SB4**	**MX4SB4**	**N210TC**	14,700	20,000	4,260
7.1	57,900	1.2	249		**306R4**	**BE132S4**	**BX132SB4**	**ME4SB4**	**MX4SB4**	**N210TC**	11,700	14,800	4,090
7.1	59,800	2.7	249	**310ML3**		**BE132S4**	**BX132SB4**	**ME4SB4**	**MX4SB4**		17,200	22,200	7,600
7.4	57,100	1.3	238	**306L3**		**BE132S4**	**BX132SB4**	**ME4SB4**	**MX4SB4**	**N210TC**	11,700	14,800	4,030
7.4	57,400	1.3	239	**307L3**		**BE132S4**	**BX132SB4**	**ME4SB4**	**MX4SB4**	**N210TC**	14,700	20,000	5,190
7.4	57,400	2.0	239	**309L3**		**BE132S4**	**BX132SB4**	**ME4SB4**	**MX4SB4**	**N210TC**	14,700	20,000	4,150

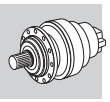

A

P_1 = 7.5 hp

n_2 rpm	T_2 lb•in	S	i			IE2	IE3	IE2	IE3	NEMA	Rn_2 [lbs] NHC/HC NPC/PC	HZ/PZ	FZ
7.6	54,000	1.8	232		**307R4**	**BE132S4**	**BX132SB4**	**ME4SB4**	**MX4SB4**	**N210TC**	14,700	20,000	5,140
7.6	54,000	2.7	232		**309R4**	**BE132S4**	**BX132SB4**	**ME4SB4**	**MX4SB4**	**N210TC**	14,700	20,000	4,110
7.7	53,600	1.3	230		**306R4**	**BE132S4**	**BX132SB4**	**ME4SB4**	**MX4SB4**	**N210TC**	11,700	14,800	3,990
7.9	53,500	2.2	223	**309L3**		**BE132S4**	**BX132SB4**	**ME4SB4**	**MX4SB4**	**N210TC**	14,700	20,000	4,060
8.0	53,200	1.1	222	**306L3**		**BE132S4**	**BX132SB4**	**ME4SB4**	**MX4SB4**	**N210TC**	11,700	14,800	3,940
8.0	53,000	2.1	221	**307L3**		**BE132S4**	**BX132SB4**	**ME4SB4**	**MX4SB4**	**N210TC**	14,700	20,000	5,060
8.3	49,900	0.9	214		**305R4**	**BE132S4**	**BX132SB4**	**ME4SB4**	**MX4SB4**	**N210TC**	8,540	10,800	2,670
8.3	49,700	1.7	214		**306R4**	**BE132S4**	**BX132SB4**	**ME4SB4**	**MX4SB4**	**N210TC**	11,700	14,800	3,890
8.6	49,100	1.4	205	**306L3**		**BE132S4**	**BX132SB4**	**ME4SB4**	**MX4SB4**	**N210TC**	11,700	14,800	3,830
8.6	47,900	2.6	206		**307R4**	**BE132S4**	**BX132SB4**	**ME4SB4**	**MX4SB4**	**N210TC**	14,700	20,000	4,940
8.8	48,400	2.0	202	**307L3**		**BE132S4**	**BX132SB4**	**ME4SB4**	**MX4SB4**	**N210TC**	14,700	20,000	4,900
8.8	48,400	3.0	202	**309L3**		**BE132S4**	**BX132SB4**	**ME4SB4**	**MX4SB4**	**N210TC**	14,700	20,000	3,920
9.3	45,500	1.3	190	**306L3**		**BE132S4**	**BX132SB4**	**ME4SB4**	**MX4SB4**	**N210TC**	11,700	14,800	3,740
9.3	44,400	2.7	191		**307R4**	**BE132S4**	**BX132SB4**	**ME4SB4**	**MX4SB4**	**N210TC**	14,700	20,000	4,810
9.6	43,000	0.9	185		**305R4**	**BE132S4**	**BX132SB4**	**ME4SB4**	**MX4SB4**	**N210TC**	8,540	10,800	2,540
9.7	43,800	2.9	183	**309L3**		**BE132S4**	**BX132SB4**	**ME4SB4**	**MX4SB4**	**N210TC**	14,700	20,000	3,800
9.8	42,100	2.0	181		**306R4**	**BE132S4**	**BX132SB4**	**ME4SB4**	**MX4SB4**	**N210TC**	11,700	14,800	3,680
10.0	42,600	0.9	178	**305L3**		**BE132S4**	**BX132SB4**	**ME4SB4**	**MX4SB4**	**N210TC**	8,540	10,800	2,510
10.0	42,500	2.6	177	**307L3**		**BE132S4**	**BX132SB4**	**ME4SB4**	**MX4SB4**	**N210TC**	14,700	20,000	4,700
10.5	39,000	1.7	168		**306R4**	**BE132S4**	**BX132SB4**	**ME4SB4**	**MX4SB4**	**N210TC**	11,500	14,600	3,590
10.7	38,400	2.5	165		**307R4**	**BE132S4**	**BX132SB4**	**ME4SB4**	**MX4SB4**	**N210TC**	14,400	19,600	4,590
10.8	39,300	1.0	164	**305L3**		**BE132S4**	**BX132SB4**	**ME4SB4**	**MX4SB4**	**N210TC**	8,340	10,500	2,440
11.0	38,800	2.4	162	**307L3**		**BE132S4**	**BX132SB4**	**ME4SB4**	**MX4SB4**	**N210TC**	14,300	19,400	4,550
11.2	36,800	1.3	158		**305R4**	**BE132S4**	**BX132SB4**	**ME4SB4**	**MX4SB4**	**N210TC**	8,260	10,400	2,410
11.2	36,700	2.3	158		**306R4**	**BE132S4**	**BX132SB4**	**ME4SB4**	**MX4SB4**	**N210TC**	11,300	14,300	3,520
11.6	36,500	1.8	152	**306L3**		**BE132S4**	**BX132SB4**	**ME4SB4**	**MX4SB4**	**N210TC**	11,200	14,100	3,470
11.9	34,500	1.1	148		**305R4**	**BE132S4**	**BX132SB4**	**ME4SB4**	**MX4SB4**	**N210TC**	8,100	10,200	2,360
12.3	34,600	1.4	144		**306R3**	**BE132S4**	**BX132SB4**	**ME4SB4**	**MX4SB4**	**N210TC**	11,000	13,900	3,410
12.5	33,900	0.9	141	**304L3**		**BE132S4**	**BX132SB4**	**ME4SB4**	**MX4SB4**	**N210TC**	7,990	10,100	2,320
12.5	33,900	1.3	141	**305L3**		**BE132S4**	**BX132SB4**	**ME4SB4**	**MX4SB4**	**N210TC**	7,990	10,100	2,320
12.6	33,800	2.0	141	**306L3**		**BE132S4**	**BX132SB4**	**ME4SB4**	**MX4SB4**	**N210TC**	11,000	13,800	3,390
12.8	33,300	2.8	139	**307L3**		**BE132S4**	**BX132SB4**	**ME4SB4**	**MX4SB4**	**N210TC**	13,600	18,600	4,330
13.6	31,300	1.0	130	**304L3**		**BE132S4**	**BX132SB4**	**ME4SB4**	**MX4SB4**	**N210TC**	7,800	9,850	2,260
13.7	30,100	1.0	129		**304R4**	**BE132S4**	**BX132SB4**			**N210TC**	7,770	9,820	2,260
13.7	30,100	1.5	129		**305R4**	**BE132S4**	**BX132SB4**	**ME4SB4**	**MX4SB4**	**N210TC**	7,770	9,820	2,260
14.2	29,900	1.1	124	**305L3**		**BE132S4**	**BX132SB4**	**ME4SB4**	**MX4SB4**	**N210TC**	7,690	9,710	2,230
14.6	29,100	2.3	121	**306L3**		**BE132S4**	**BX132SB4**	**ME4SB4**	**MX4SB4**	**N210TC**	10,500	13,200	3,220
14.8	28,700	2.6	120		**307R3**	**BE132S4**	**BX132SB4**	**ME4SB4**	**MX4SB4**	**N210TC**	13,100	17,800	4,120
14.9	28,600	2.0	119		**306R3**	**BE132S4**	**BX132SB4**	**ME4SB4**	**MX4SB4**	**N210TC**	10,400	13,100	3,200
15.5	27,400	1.2	114		**305R3**	**BE132S4**	**BX132SB4**	**ME4SB4**	**MX4SB4**	**N210TC**	7,490	9,470	2,170
15.7	27,000	1.2	113	**305L3**		**BE132S4**	**BX132SB4**	**ME4SB4**	**MX4SB4**	**N210TC**	7,460	9,420	2,150
15.8	27,000	2.4	112	**306L3**		**BE132S4**	**BX132SB4**	**ME4SB4**	**MX4SB4**	**N210TC**	10,200	12,900	3,140
16.0	26,500	1.1	111	**304L3**		**BE132S4**	**BX132SB4**	**ME4SB4**	**MX4SB4**	**N210TC**	7,420	9,370	2,140
16.2	25,500	1.2	109		**304R4**	**BE132S4**	**BX132SB4**			**N210TC**	7,400	9,340	2,130
16.9	25,100	1.2	105	**304L3**		**BE132S4**	**BX132SB4**	**ME4SB4**	**MX4SB4**	**N210TC**	7,290	9,210	2,100
16.9	25,100	1.7	105	**305L3**		**BE132S4**	**BX132SB4**	**ME4SB4**	**MX4SB4**	**N210TC**	7,290	9,210	2,100
18.0	23,600	2.4	98.5		**306R3**	**BE132S4**	**BX132SB4**	**ME4SB4**	**MX4SB4**	**N210TC**	9,840	12,400	3,000
18.2	23,300	0.9	97.0		**304R3**	**BE132S4**	**BX132SB4**			**N210TC**	7,130	9,010	2,050
19.3	22,000	1.4	91.5		**305R3**	**BE132S4**	**BX132SB4**	**ME4SB4**	**MX4SB4**	**N210TC**	7,010	8,850	2,010
19.6	21,600	0.9	90.2	**303L3**		**BE132S4**	**BX132SB4**	**ME4SB4**	**MX4SB4**	**N210TC**	6,980	8,820	2,000
19.6	21,600	1.3	90.2	**304L3**		**BE132S4**	**BX132SB4**	**ME4SB4**	**MX4SB4**	**N210TC**	6,980	8,820	2,000
19.6	21,600	1.7	90.2	**305L3**		**BE132S4**	**BX132SB4**	**ME4SB4**	**MX4SB4**	**N210TC**	6,980	8,820	2,000
19.8	20,800	1.4	89.4		**304R4**	**BE132S4**	**BX132SB4**			**N210TC**	6,960	8,790	1,990
22.5	18,900	1.0	78.7		**303R3**	**BE132S4**	**BX132SB4**			**N210TC**	6,700	8,460	1,910
22.5	18,900	1.3	78.7		**304R3**	**BE132S4**	**BX132SB4**			**N210TC**	6,700	8,460	1,910
22.5	18,900	2.0	78.7		**305R3**	**BE132S4**	**BX132SB4**	**ME4SB4**	**MX4SB4**	**N210TC**	6,700	8,460	1,910
22.9	18,500	1.2	77.2	**303L3**		**BE132S4**	**BX132SB4**	**ME4SB4**	**MX4SB4**	**N210TC**	6,660	8,410	1,900
22.9	18,500	1.7	77.2	**304L3**		**BE132S4**	**BX132SB4**	**ME4SB4**	**MX4SB4**	**N210TC**	6,660	8,410	1,900
22.9	18,500	2.2	77.2	**305L3**		**BE132S4**	**BX132SB4**	**ME4SB4**	**MX4SB4**	**N210TC**	6,660	8,410	1,900
24.1	17,600	0.9	73.3		**303R3**	**BE132S4**	**BX132SB4**			**N210TC**	6,560	8,280	1,870

Bonfiglioli Riduttori

P_1 = 7.5 hp

n_2 rpm	T_2 lb•in	S	i			IE2	IE3	IE2	IE3	NEMA	Rn_2 [lbs] NHC/HC NPC/PC	HZ/PZ	FZ
24.1	17,600	1.8	73.3		**305R3**	**BE132S4**	**BX132SB4**	**ME4SB4**	**MX4SB4**	**N210TC**	6,560	8,280	1,870
24.4	17,900	2.6	72.5	**306L2**		**BE132S4**	**BX132SB4**	**ME4SB4**	**MX4SB4**		8,980	11,300	2,710
24.5	17,300	1.1	72.3	**303L3**		**BE132S4**	**BX132SB4**	**ME4SB4**	**MX4SB4**	**N210TC**	6,530	8,250	1,860
24.5	17,300	1.7	72.3	**304L3**		**BE132S4**	**BX132SB4**	**ME4SB4**	**MX4SB4**	**N210TC**	6,530	8,250	1,860
24.5	17,300	2.1	72.3	**305L3**		**BE132S4**	**BX132SB4**	**ME4SB4**	**MX4SB4**	**N210TC**	6,530	8,250	1,860
28.0	15,200	1.0	63.2	**301L3**		**BE132S4**	**BX132SB4**	**ME4SB4**	**MX4SB4**	**N210TC**	3,270	3,880	590
28.1	15,100	1.0	62.9		**301R3**	**BE132S4**	**BX132SB4**			**N210TC**	3,260	3,870	590
28.1	15,100	1.5	63.1	**303L3**		**BE132S4**	**BX132SB4**	**ME4SB4**	**MX4SB4**	**N210TC**	6,270	7,920	1,780
28.1	15,100	1.3	63.1		**303R3**	**BE132S4**	**BX132SB4**			**N210TC**	6,270	7,920	1,780
28.1	15,100	2.0	63.1	**304L3**		**BE132S4**	**BX132SB4**	**ME4SB4**	**MX4SB4**	**N210TC**	6,270	7,920	1,780
28.1	15,100	1.7	63.1		**304R3**	**BE132S4**	**BX132SB4**			**N210TC**	6,270	7,920	1,780
28.1	15,100	2.7	63.1	**305L3**		**BE132S4**	**BX132SB4**	**ME4SB4**	**MX4SB4**	**N210TC**	6,270	7,920	1,780
28.1	15,100	2.5	63.1		**305R3**	**BE132S4**	**BX132SB4**	**ME4SB4**	**MX4SB4**	**N210TC**	6,270	7,920	1,780
29.9	14,600	1.4	59.1	**304L2**		**BE132S4**	**BX132SB4**	**ME4SB4**	**MX4SB4**	**N210TC**	6,150	7,770	1,740
32	13,800	1.2	55.8	**303L2**		**BE132S4**	**BX132SB4**	**ME4SB4**	**MX4SB4**	**N210TC**	6,040	7,630	1,700
32	13,800	2.3	55.8	**305L2**		**BE132S4**	**BX132SB4**	**ME4SB4**	**MX4SB4**	**N210TC**	6,040	7,630	1,700
33	12,800	1.5	53.4	**303L3**		**BE132S4**	**BX132SB4**	**ME4SB4**	**MX4SB4**	**N210TC**	5,960	7,530	1,680
33	13,000	1.2	54.2		**303R3**	**BE132S4**	**BX132SB4**			**N210TC**	5,990	7,570	1,690
33	12,800	2.2	53.4	**304L3**		**BE132S4**	**BX132SB4**	**ME4SB4**	**MX4SB4**	**N210TC**	5,960	7,530	1,680
33	12,800	2.7	53.4	**305L3**		**BE132S4**	**BX132SB4**	**ME4SB4**	**MX4SB4**	**N210TC**	5,960	7,530	1,680
33	13,000	2.4	54.2		**305R3**	**BE132S4**	**BX132SB4**	**ME4SB4**	**MX4SB4**	**N210TC**	5,990	7,570	1,690
34	12,400	1.2	51.6	**301L3**		**BE132S4**	**BX132SB4**	**ME4SB4**	**MX4SB4**	**N210TC**	3,080	3,650	550
35	12,100	1.2	50.4		**301R3**	**BE132S4**	**BX132SB4**			**N210TC**	3,050	3,620	550
35	12,100	1.7	50.3		**303R3**	**BE132S4**	**BX132SB4**			**N210TC**	5,860	7,400	1,650
35	12,100	2.5	50.3		**304R3**	**BE132S4**	**BX132SB4**			**N210TC**	5,860	7,400	1,650
37	11,700	1.8	47.3	**304L2**		**BE132S4**	**BX132SB4**	**ME4SB4**	**MX4SB4**	**N210TC**	5,750	7,260	1,610
38	11,200	1.7	46.6		**303R3**	**BE132S4**	**BX132SB4**			**N210TC**	5,720	7,230	1,610
38	11,200	2.3	46.6		**304R3**	**BE132S4**	**BX132SB4**			**N210TC**	5,720	7,230	1,610
40	11,000	1.5	44.6	**303L2**		**BE132S4**	**BX132SB4**	**ME4SB4**	**MX4SB4**	**N210TC**	5,650	7,140	1,580
40	11,000	2.9	44.6	**305L2**		**BE132S4**	**BX132SB4**	**ME4SB4**	**MX4SB4**	**N210TC**	5,650	7,140	1,580
41	10,500	2.7	43.6	**304L3**		**BE132S4**	**BX132SB4**	**ME4SB4**	**MX4SB4**	**N210TC**	5,610	7,090	1,570
42	10,200	1.8	42.6		**303R3**	**BE132S4**	**BX132SB4**			**N210TC**	5,570	7,040	1,560
42	10,200	2.7	42.6		**304R3**	**BE132S4**	**BX132SB4**			**N210TC**	5,570	7,040	1,560
43	10,300	1.1	41.5	**301L2**		**BE132S4**	**BX132SB4**	**ME4SB4**	**MX4SB4**	**N210TC**	2,880	3,420	510
43	9,870	1.2	41.2		**301R3**	**BE132S4**	**BX132SB4**			**N210TC**	2,870	3,410	510
46	9,490	1.4	38.4	**301L2**		**BE132S4**	**BX132SB4**	**ME4SB4**	**MX4SB4**	**N210TC**	2,810	3,340	500
46	9,500	2.0	38.4	**303L2**		**BE132S4**	**BX132SB4**	**ME4SB4**	**MX4SB4**	**N210TC**	5,400	6,820	1,500
46	9,500	2.7	38.4	**304L2**		**BE132S4**	**BX132SB4**	**ME4SB4**	**MX4SB4**	**N210TC**	5,400	6,820	1,500
48	8,940	1.6	37.3		**301R3**	**BE132S4**	**BX132SB4**			**N210TC**	2,790	3,310	500
48	8,910	2.3	37.1		**303R3**	**BE132S4**	**BX132SB4**			**N210TC**	5,350	6,750	1,490
49	8,850	1.8	35.8	**303L2**		**BE132S4**	**BX132SB4**	**ME4SB4**	**MX4SB4**	**N210TC**	5,290	6,680	1,470
53	8,230	1.4	33.3	**301L2**		**BE132S4**	**BX132SB4**	**ME4SB4**	**MX4SB4**	**N210TC**	2,700	3,200	480
56	7,550	2.4	31.5		**303R3**	**BE132S4**	**BX132SB4**			**N210TC**	5,090	6,430	1,410
58	7,590	0.9	30.7	**300L2**		**BE132S4**	**BX132SB4**	**ME4SB4**	**MX4SB4**	**N210TC**	2,630	3,320	470
58	7,300	1.0	30.4		**300R3**	**BE132S4**	**BX132SB4**			**N210TC**	2,620	3,310	460
58	7,590	1.8	30.7	**301L2**		**BE132S4**	**BX132SB4**	**ME4SB4**	**MX4SB4**	**N210TC**	2,630	3,120	470
58	7,300	1.8	30.4		**301R3**	**BE132S4**	**BX132SB4**			**N210TC**	2,620	3,110	460
58	7,610	2.5	30.8	**303L2**		**BE132S4**	**BX132SB4**	**ME4SB4**	**MX4SB4**	**N210TC**	5,050	6,380	1,400
67	6,540	2.5	26.4	**303L2**		**BE132S4**	**BX132SB4**	**ME4SB4**	**MX4SB4**	**N210TC**	4,830	6,100	1,330
69	6,160	2.8	25.7		**303R3**	**BE132S4**	**BX132SB4**			**N210TC**	4,790	6,050	1,320
71	5,960	1.1	24.8		**300R3**	**BE132S4**	**BX132SB4**			**N210TC**	2,470	3,120	430
71	5,960	2.0	24.8		**301R3**	**BE132S4**	**BX132SB4**			**N210TC**	2,470	2,930	430
71	6,130	1.2	24.8		**303R2**	**BE132S4**	**BX132SB4**	**ME4SB4**	**MX4SB4**	**N210TC**	4,740	5,980	1,300
72	6,080	1.1	24.6	**300L2**		**BE132S4**	**BX132SB4**	**ME4SB4**	**MX4SB4**	**N210TC**	2,460	3,110	430
72	6,080	2.1	24.6	**301L2**		**BE132S4**	**BX132SB4**	**ME4SB4**	**MX4SB4**	**N210TC**	2,460	2,920	430
72	6,060	3.0	24.5	**303L2**		**BE132S4**	**BX132SB4**	**ME4SB4**	**MX4SB4**	**N210TC**	4,720	5,960	1,300
85	5,140	3.0	20.8	**303L2**		**BE132S4**	**BX132SB4**	**ME4SB4**	**MX4SB4**	**N210TC**	4,490	5,670	1,230
88	4,970	1.1	20.1	**300L2**		**BE132S4**	**BX132SB4**	**ME4SB4**	**MX4SB4**	**N210TC**	2,320	2,930	400
88	4,970	2.2	20.1	**301L2**		**BE132S4**	**BX132SB4**	**ME4SB4**	**MX4SB4**	**N210TC**	2,320	2,750	400
92	4,750	2.8	19.2		**303R2**	**BE132S4**	**BX132SB4**	**ME4SB4**	**MX4SB4**	**N210TC**	4,390	5,540	1,190

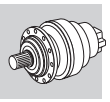

A

P_1 = 7.5 hp

n_2 rpm	T_2 lb•in	S	i			IE2	IE3	IE2	IE3	NEMA	Rn_2 [lbs] NHC/HC NPC/PC	HZ/PZ	FZ
96	4,560	1.4	18.5		**301R2**	**BE132S4**	**BX132SB4**	**ME4SB4**	**MX4SB4**	**N210TC**	2,260	2,680	390
97	4,500	1.4	18.2	**300L2**		**BE132S4**	**BX132SB4**	**ME4SB4**	**MX4SB4**	**N210TC**	2,250	2,840	390
97	4,500	2.5	18.2	**301L2**		**BE132S4**	**BX132SB4**	**ME4SB4**	**MX4SB4**	**N210TC**	2,250	2,670	390
119	3,670	1.6	14.8	**300L2**		**BE132S4**	**BX132SB4**	**ME4SB4**	**MX4SB4**	**N210TC**	2,120	2,670	370
119	3,670	2.9	14.8	**301L2**		**BE132S4**	**BX132SB4**	**ME4SB4**	**MX4SB4**	**N210TC**	2,120	2,510	370
120	3,650	1.2	14.8		**300R2**	**BE132S4**	**BX132SB4**	**ME4SB4**	**MX4SB4**	**N210TC**	2,110	2,670	360
120	3,650	2.2	14.8		**301R2**	**BE132S4**	**BX132SB4**	**ME4SB4**	**MX4SB4**	**N210TC**	2,110	2,510	360
146	3,000	1.9	12.1	**300L2**		**BE132S4**	**BX132SB4**	**ME4SB4**	**MX4SB4**	**N210TC**	1,990	2,510	340
150	2,930	1.7	11.8		**300R2**	**BE132S4**	**BX132SB4**	**ME4SB4**	**MX4SB4**	**N210TC**	1,980	2,500	340
183	2,460	2.6	9.67	**303L1**		**BE132S4**	**BX132SB4**	**ME4SB4**	**MX4SB4**		3,570	4,510	950
197	2,290	1.2	9.00	**300L1**		**BE132S4**	**BX132SB4**	**ME4SB4**	**MX4SB4**	**N210TC**	1,820	2,300	310
197	2,290	2.3	9.00	**301L1**		**BE132S4**	**BX132SB4**	**ME4SB4**	**MX4SB4**	**N210TC**	1,820	2,160	310
203	2,160	2.4	8.74		**300R2**	**BE132S4**	**BX132SB4**	**ME4SB4**	**MX4SB4**	**N210TC**	1,810	2,280	310
246	1,840	1.9	7.20	**300L1**		**BE132S4**	**BX132SB4**	**ME4SB4**	**MX4SB4**	**N210TC**	1,700	2,150	290
248	1,760	2.8	7.13		**300R2**	**BE132S4**	**BX132SB4**	**ME4SB4**	**MX4SB4**	**N210TC**	1,700	2,140	290
307	1,470	2.7	5.77	**300L1**		**BE132S4**	**BX132SB4**	**ME4SB4**	**MX4SB4**	**N210TC**	1,590	2,010	270

P_1 = 10 hp

n_2 rpm	T_2 lb•in	S	i			IE2	IE3	IE2	IE3	NEMA	Rn_2 [lbs] NHC/HC NPC/PC	HZ/PZ	FZ
0.94	600,600	2.2	1893	**317ML4**		**BE132MA4**	**BX132MA4**	**ME4LA4**	**MX4LA4**		89,800	95,400	33,700
0.98	572,900	1.2	1805	**315ML4**		**BE132MA4**	**BX132MA4**	**ME4LA4**	**MX4LA4**		36,800	44,900	20,200
0.99	570,000	1.0	1796	**314ML4**		**BE132MA4**	**BX132MA4**	**ME4LA4**	**MX4LA4**		36,800	44,900	20,200
1.1	492,800	2.2	1553	**316ML4**		**BE132MA4**	**BX132MA4**	**ME4LA4**	**MX4LA4**		56,100	62,900	32,300
1.1	506,100	2.7	1595	**317ML4**		**BE132MA4**	**BX132MA4**	**ME4LA4**	**MX4LA4**		87,600	93,100	32,600
1.2	476,600	1.0	1502	**313ML4**		**BE132MA4**	**BX132MA4**	**ME4LA4**	**MX4LA4**	**N210TC**	36,700	46,000	17,000
1.2	471,200	1.2	1485	**314ML4**		**BE132MA4**	**BX132MA4**	**ME4LA4**	**MX4LA4**		35,800	43,700	19,100
1.2	473,600	1.4	1492	**315ML4**		**BE132MA4**	**BX132MA4**	**ME4LA4**	**MX4LA4**		35,800	43,700	19,100
1.3	442,300	1.0	1394	**313ML4**		**BE132MA4**	**BX132MA4**	**ME4LA4**	**MX4LA4**	**N210TC**	36,300	45,500	16,600
1.4	390,400	1.0	1230	**311ML4**		**BE132MA4**	**BX132MA4**	**ME4LA4**	**MX4LA4**	**N210TC**	25,700	26,900	12,900
1.4	401,600	1.2	1266	**313ML4**		**BE132MA4**	**BX132MA4**	**ME4LA4**	**MX4LA4**	**N210TC**	35,800	44,900	16,100
1.4	405,400	1.6	1269	**314ML4**		**BE132MA4**	**BX132MA4**	**ME4LA4**	**MX4LA4**		35,000	42,700	18,100
1.4	407,400	1.9	1284	**315ML4**		**BE132MA4**	**BX132MA4**	**ME4LA4**	**MX4LA4**		35,000	42,800	18,200
1.4	392,700	2.6	1237	**316ML4**		**BE132MA4**	**BX132MA4**	**ME4LA4**	**MX4LA4**		54,300	60,900	29,900
1.4	415,200	2.5	1308	**316ML4**		**BE132MA4**	**BX132MA4**	**ME4LA4**	**MX4LA4**		54,700	61,400	30,500
1.6	354,400	1.2	1117	**313ML4**		**BE132MA4**	**BX132MA4**	**ME4LA4**	**MX4LA4**	**N210TC**	35,200	44,100	15,400
1.6	348,700	1.8	1099	**314ML4**		**BE132MA4**	**BX132MA4**	**ME4LA4**	**MX4LA4**		34,300	41,800	17,300
1.6	350,400	2.2	1104	**315ML4**		**BE132MA4**	**BX132MA4**	**ME4LA4**	**MX4LA4**		34,300	41,900	17,300
1.6	350,400	2.9	1104	**316ML4**		**BE132MA4**	**BX132MA4**	**ME4LA4**	**MX4LA4**		53,400	59,900	28,800
1.7	335,900	1.2	1058	**311ML4**		**BE132MA4**	**BX132MA4**	**ME4LA4**	**MX4LA4**	**N210TC**	25,200	26,300	12,300
1.7	321,800	1.4	1014	**313ML4**		**BE132MA4**	**BX132MA4**	**ME4LA4**	**MX4LA4**	**N210TC**	34,700	43,500	14,900
1.7	329,200	2.0	1038	**314ML4**		**BE132MA4**	**BX132MA4**	**ME4LA4**	**MX4LA4**		34,000	41,500	16,900
1.7	330,900	2.6	1043	**315ML4**		**BE132MA4**	**BX132MA4**	**ME4LA4**	**MX4LA4**		34,000	41,500	17,000
1.8	309,100	0.9	974	**310ML4**		**BE132MA4**	**BX132MA4**	**ME4LA4**	**MX4LA4**	**N210TC**	19,900	25,700	12,000
1.8	312,900	1.2	986	**311ML4**		**BE132MA4**	**BX132MA4**	**ME4LA4**	**MX4LA4**	**N210TC**	24,900	26,000	12,000
1.9	293,800	2.1	926	**314ML4**		**BE132MA4**	**BX132MA4**	**ME4LA4**	**MX4LA4**		33,500	40,800	16,300
1.9	295,300	2.6	930	**315ML4**		**BE132MA4**	**BX132MA4**	**ME4LA4**	**MX4LA4**		33,500	40,900	16,300
1.9	288,600	2.2	909		**315MR4**	**BE132MA4**	**BX132MA4**	**ME4LA4**	**MX4LA4**	**N210TC**	33,400	40,700	16,200
2.0	282,200	1.6	889	**313ML4**		**BE132MA4**	**BX132MA4**	**ME4LA4**	**MX4LA4**	**N210TC**	34,100	42,700	14,300
2.1	253,700	1.4	825	**311ML4**		**BE132MA4**	**BX132MA4**	**ME4LA4**	**MX4LA4**	**N210TC**	24,300	25,400	11,300
2.1	272,200	2.4	858	**314ML4**		**BE132MA4**	**BX132MA4**	**ME4LA4**	**MX4LA4**		33,100	40,400	15,900
2.2	253,300	0.9	798	**310ML4**		**BE132MA4**	**BX132MA4**	**ME4LA4**	**MX4LA4**	**N210TC**	19,300	25,000	11,200
2.2	250,700	1.7	790	**313ML4**		**BE132MA4**	**BX132MA4**	**ME4LA4**	**MX4LA4**	**N210TC**	33,500	42,000	13,700
2.3	240,100	0.9	757		**310MR4**	**BE132MA4**	**BX132MA4**	**ME4LA4**	**MX4LA4**	**N210TC**	19,200	24,800	11,000

P_1 = 10 hp

n_2 rpm	T_2 lb•in	S	i			IE2	IE3	IE2	IE3	NEMA	Rn_2 [lbs] NHC/HC NPC/PC	HZ/PZ	FZ
2.3	247,000	1.2	778		**313MR4**	**BE132MA4**	**BX132MA4**	**ME4LA4**	**MX4LA4**	**N210TC**	33,400	41,900	13,700
2.4	230,300	1.0	726	**310ML4**		**BE132MA4**	**BX132MA4**	**ME4LA4**	**MX4LA4**	**N210TC**	19,100	24,600	10,900
2.4	236,800	1.2	746		**311MR4**	**BE132MA4**	**BX132MA4**	**ME4LA4**	**MX4LA4**	**N210TC**	24,000	25,000	11,000
2.4	234,100	2.7	738	**314ML4**		**BE132MA4**	**BX132MA4**	**ME4LA4**	**MX4LA4**		32,400	39,500	15,100
2.5	220,600	1.9	695	**313ML4**		**BE132MA4**	**BX132MA4**	**ME4LA4**	**MX4LA4**	**N210TC**	32,900	41,200	13,200
2.7	205,200	2.1	647		**313MR4**	**BE132MA4**	**BX132MA4**	**ME4LA4**	**MX4LA4**	**N210TC**	32,600	40,800	12,900
2.8	202,000	1.1	637	**310ML4**		**BE132MA4**	**BX132MA4**	**ME4LA4**	**MX4LA4**	**N210TC**	18,700	24,200	10,400
2.8	198,900	1.8	627	**311ML4**		**BE132MA4**	**BX132MA4**	**ME4LA4**	**MX4LA4**	**N210TC**	23,400	24,400	10,300
2.8	199,500	1.8	629		**311MR4**	**BE132MA4**	**BX132MA4**	**ME4LA4**	**MX4LA4**	**N210TC**	23,400	24,400	10,300
2.8	200,800	2.1	633	**313ML4**		**BE132MA4**	**BX132MA4**	**ME4LA4**	**MX4LA4**	**N210TC**	32,500	40,600	12,800
2.9	194,800	2.4	614		**314MR4**	**BE132MA4**	**BX132MA4**	**ME4LA4**	**MX4LA4**	**N210TC**	31,500	38,500	14,200
3.0	187,200	1.2	590	**310ML4**		**BE132MA4**	**BX132MA4**	**ME4LA4**	**MX4LA4**	**N210TC**	18,500	23,900	10,100
3.0	187,100	0.9	590		**310MR4**	**BE132MA4**	**BX132MA4**	**ME4LA4**	**MX4LA4**	**N210TC**	18,500	23,900	10,100
3.1	183,600	1.0	579	**309L4**		**BE132MA4**	**BX132MA4**	**ME4LA4**	**MX4LA4**	**N210TC**	15,700	21,400	5,580
3.1	180,100	2.0	568	**311ML4**		**BE132MA4**	**BX132MA4**	**ME4LA4**	**MX4LA4**	**N210TC**	23,000	24,000	10,000
3.1	178,900	2.7	564	**313ML4**		**BE132MA4**	**BX132MA4**	**ME4LA4**	**MX4LA4**	**N210TC**	31,900	40,000	12,300
3.3	169,600	2.4	535		**313MR4**	**BE132MA4**	**BX132MA4**	**ME4LA4**	**MX4LA4**	**N210TC**	31,700	39,700	12,100
3.4	164,100	1.3	517		**310MR4**	**BE132MA4**	**BX132MA4**	**ME4LA4**	**MX4LA4**	**N210TC**	18,200	23,500	9,700
3.4	164,900	2.1	520		**311MR4**	**BE132MA4**	**BX132MA4**	**ME4LA4**	**MX4LA4**	**N210TC**	22,800	23,700	9,710
3.4	163,000	2.5	514	**313ML4**		**BE132MA4**	**BX132MA4**	**ME4LA4**	**MX4LA4**	**N210TC**	31,500	39,500	11,900
3.5	161,000	1.3	507	**310ML4**		**BE132MA4**	**BX132MA4**	**ME4LA4**	**MX4LA4**	**N210TC**	18,100	23,400	9,630
3.5	162,500	2.5	512	**311ML4**		**BE132MA4**	**BX132MA4**	**ME4LA4**	**MX4LA4**	**N210TC**	22,700	23,700	9,660
3.6	155,500	1.8	490		**311MR4**	**BE132MA4**	**BX132MA4**	**ME4LA4**	**MX4LA4**	**N210TC**	22,600	23,500	9,520
3.6	157,400	2.7	496		**313MR4**	**BE132MA4**	**BX132MA4**	**ME4LA4**	**MX4LA4**	**N210TC**	31,400	39,300	11,800
3.8	147,500	1.1	465	**309L4**		**BE132MA4**	**BX132MA4**	**ME4LA4**	**MX4LA4**	**N210TC**	15,300	20,800	5,180
3.9	143,800	1.8	453	**310ML4**		**BE132MA4**	**BX132MA4**	**ME4LA4**	**MX4LA4**	**N210TC**	17,800	23,000	9,280
3.9	144,100	1.2	454		**310MR4**	**BE132MA4**	**BX132MA4**	**ME4LA4**	**MX4LA4**	**N210TC**	17,800	23,000	9,290
3.9	142,900	2.8	450		**313MR4**	**BE132MA4**	**BX132MA4**	**ME4LA4**	**MX4LA4**	**N210TC**	30,900	38,700	11,400
4.0	139,000	2.4	438		**311MR4**	**BE132MA4**	**BX132MA4**	**ME4LA4**	**MX4LA4**	**N210TC**	22,200	23,200	9,170
4.3	131,100	1.2	413		**309R4**	**BE132MA4**	**BX132MA4**	**ME4LA4**	**MX4LA4**	**N210TC**	15,000	20,400	4,980
4.3	131,000	2.5	413		**311MR4**	**BE132MA4**	**BX132MA4**	**ME4LA4**	**MX4LA4**	**N210TC**	22,000	23,000	8,990
4.4	128,700	1.2	406	**309L4**		**BE132MA4**	**BX132MA4**	**ME4LA4**	**MX4LA4**	**N210TC**	15,000	20,400	4,950
4.5	124,300	1.3	392	**310ML4**		**BE132MA4**	**BX132MA4**	**ME4LA4**	**MX4LA4**	**N210TC**	17,500	22,600	8,840
4.6	121,400	1.7	383		**310MR4**	**BE132MA4**	**BX132MA4**	**ME4LA4**	**MX4LA4**	**N210TC**	17,400	22,500	8,770
4.7	118,800	1.1	374		**309R4**	**BE132MA4**	**BX132MA4**	**ME4LA4**	**MX4LA4**	**N210TC**	14,800	20,100	4,820
4.9	115,200	0.9	363		**307R4**	**BE132MA4**	**BX132MA4**	**ME4LA4**	**MX4LA4**	**N210TC**	14,700	20,000	5,970
5.1	110,800	1.2	349	**307L4**		**BE132MA4**	**BX132MA4**	**ME4LA4**	**MX4LA4**	**N210TC**	14,700	20,000	5,890
5.1	110,800	1.7	349	**309L4**		**BE132MA4**	**BX132MA4**	**ME4LA4**	**MX4LA4**	**N210TC**	14,700	20,000	4,710
5.1	114,700	1.4	350	**310ML3**		**BE132MA4**	**BX132MA4**	**ME4LA4**	**MX4LA4**		17,200	22,200	8,520
5.1	110,000	2.4	347		**310MR4**	**BE132MA4**	**BX132MA4**	**ME4LA4**	**MX4LA4**	**N210TC**	17,200	22,200	8,490
5.2	108,300	3.0	341		**311MR4**	**BE132MA4**	**BX132MA4**	**ME4LA4**	**MX4LA4**	**N210TC**	21,500	22,500	8,440
5.3	105,100	0.9	321		**307R4**	**BE132MA4**	**BX132MA4**	**ME4LA4**	**MX4LA4**	**N210TC**	14,700	20,000	5,790
5.3	110,100	1.0	336	**309L3**		**BE132MA4**	**BX132MA4**	**ME4LA4**	**MX4LA4**	**N210TC**	14,700	20,000	4,650
5.3	105,100	1.4	321		**309R4**	**BE132MA4**	**BX132MA4**	**ME4LA4**	**MX4LA4**	**N210TC**	14,700	20,000	4,630
5.8	96,800	2.1	305		**310MR4**	**BE132MA4**	**BX132MA4**	**ME4LA4**	**MX4LA4**	**N210TC**	17,200	22,200	8,130
5.8	99,400	2.7	304	**313ML3**		**BE132MA4**	**BX132MA4**	**ME4LA4**	**MX4LA4**		29,900	37,400	9,990
5.9	95,200	1.3	300		**307R4**	**BE132MA4**	**BX132MA4**	**ME4LA4**	**MX4LA4**	**N210TC**	14,700	20,000	5,600
6.0	96,600	2.1	295	**310ML3**		**BE132MA4**	**BX132MA4**	**ME4LA4**	**MX4LA4**		17,200	22,200	8,040
6.1	95,300	2.5	291	**311ML3**		**BE132MA4**	**BX132MA4**	**ME4LA4**	**MX4LA4**		21,500	22,500	8,010
6.2	92,700	1.1	284	**307L3**		**BE132MA4**	**BX132MA4**	**ME4LA4**	**MX4LA4**	**N210TC**	14,700	20,000	5,490
6.2	90,300	1.1	284		**307R4**	**BE132MA4**	**BX132MA4**	**ME4LA4**	**MX4LA4**	**N210TC**	14,700	20,000	5,500
6.2	92,700	1.5	284	**309L3**		**BE132MA4**	**BX132MA4**	**ME4LA4**	**MX4LA4**	**N210TC**	14,700	20,000	4,400
6.2	90,300	1.6	284		**309R4**	**BE132MA4**	**BX132MA4**	**ME4LA4**	**MX4LA4**	**N210TC**	14,700	20,000	4,400
6.4	87,700	2.8	276		**310MR4**	**BE132MA4**	**BX132MA4**	**ME4LA4**	**MX4LA4**	**N210TC**	17,200	22,200	7,870
6.9	81,900	1.5	258		**307R4**	**BE132MA4**	**BX132MA4**	**ME4LA4**	**MX4LA4**	**N210TC**	14,700	20,000	5,320
6.9	81,900	1.9	258		**309R4**	**BE132MA4**	**BX132MA4**	**ME4LA4**	**MX4LA4**	**N210TC**	14,700	20,000	4,260
6.9	82,000	2.4	258		**310MR4**	**BE132MA4**	**BX132MA4**	**ME4LA4**	**MX4LA4**	**N210TC**	17,200	22,200	7,690
7.1	78,900	0.9	249		**306R4**	**BE132MA4**	**BX132MA4**	**ME4LA4**	**MX4LA4**	**N210TC**	11,700	14,800	4,090
7.1	81,500	1.9	249	**310ML3**		**BE132MA4**	**BX132MA4**	**ME4LA4**	**MX4LA4**		17,200	22,200	7,600
7.4	77,900	0.9	238	**306L3**		**BE132MA4**	**BX132MA4**	**ME4LA4**	**MX4LA4**	**N210TC**	11,700	14,800	4,030

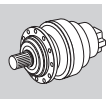

A

P_1 = 10 hp

n_2 rpm	T_2 lb•in	S	i			IE2	IE3	IE2	IE3	NEMA	Rn_2 [lbs] NHC/HC NPC/PC	HZ/PZ	FZ
7.4	78,300	1.0	239	**307L3**		**BE132MA4**	**BX132MA4**	**ME4LA4**	**MX4LA4**	**N210TC**	14,700	20,000	5,190
7.4	78,300	1.5	239	**309L3**		**BE132MA4**	**BX132MA4**	**ME4LA4**	**MX4LA4**	**N210TC**	14,700	20,000	4,150
7.6	73,700	1.3	232		**307R4**	**BE132MA4**	**BX132MA4**	**ME4LA4**	**MX4LA4**	**N210TC**	14,700	20,000	5,140
7.6	73,700	2.0	232		**309R4**	**BE132MA4**	**BX132MA4**	**ME4LA4**	**MX4LA4**	**N210TC**	14,700	20,000	4,110
7.7	73,100	0.9	230		**306R4**	**BE132MA4**	**BX132MA4**	**ME4LA4**	**MX4LA4**	**N210TC**	11,700	14,800	3,990
7.7	75,300	2.3	230	**310ML3**		**BE132MA4**	**BX132MA4**	**ME4LA4**	**MX4LA4**		17,200	22,200	7,400
7.9	72,900	1.6	223	**309L3**		**BE132MA4**	**BX132MA4**	**ME4LA4**	**MX4LA4**	**N210TC**	14,700	20,000	4,060
8.0	72,300	1.5	221	**307L3**		**BE132MA4**	**BX132MA4**	**ME4LA4**	**MX4LA4**	**N210TC**	14,700	20,000	5,060
8.3	67,800	1.3	214		**306R4**	**BE132MA4**	**BX132MA4**	**ME4LA4**	**MX4LA4**	**N210TC**	11,700	14,800	3,890
8.6	67,000	1.1	205	**306L3**		**BE132MA4**	**BX132MA4**	**ME4LA4**	**MX4LA4**	**N210TC**	11,700	14,800	3,830
8.6	65,300	1.9	206		**307R4**	**BE132MA4**	**BX132MA4**	**ME4LA4**	**MX4LA4**	**N210TC**	14,700	20,000	4,940
8.6	65,300	2.6	206		**309R4**	**BE132MA4**	**BX132MA4**	**ME4LA4**	**MX4LA4**	**N210TC**	14,700	20,000	3,950
8.6	65,300	3.0	206		**310MR4**	**BE132MA4**	**BX132MA4**	**ME4LA4**	**MX4LA4**	**N210TC**	17,200	22,200	7,130
8.8	66,000	1.5	202	**307L3**		**BE132MA4**	**BX132MA4**	**ME4LA4**	**MX4LA4**	**N210TC**	14,700	20,000	4,900
8.8	66,000	2.2	202	**309L3**		**BE132MA4**	**BX132MA4**	**ME4LA4**	**MX4LA4**	**N210TC**	14,700	20,000	3,920
8.8	66,000	2.9	202	**310ML3**		**BE132MA4**	**BX132MA4**	**ME4LA4**	**MX4LA4**		17,200	22,200	7,090
9.3	62,100	0.9	190	**306L3**		**BE132MA4**	**BX132MA4**	**ME4LA4**	**MX4LA4**	**N210TC**	11,700	14,800	3,740
9.3	60,500	2.0	191		**307R4**	**BE132MA4**	**BX132MA4**	**ME4LA4**	**MX4LA4**	**N210TC**	14,700	20,000	4,810
9.3	60,500	2.5	191		**309R4**	**BE132MA4**	**BX132MA4**	**ME4LA4**	**MX4LA4**	**N210TC**	14,700	20,000	3,850
9.7	59,700	2.1	183	**309L3**		**BE132MA4**	**BX132MA4**	**ME4LA4**	**MX4LA4**	**N210TC**	14,700	20,000	3,800
9.8	57,400	1.5	181		**306R4**	**BE132MA4**	**BX132MA4**	**ME4LA4**	**MX4LA4**	**N210TC**	11,700	14,800	3,680
10.0	57,900	1.9	177	**307L3**		**BE132MA4**	**BX132MA4**	**ME4LA4**	**MX4LA4**	**N210TC**	14,700	20,000	4,700
10.0	58,000	2.7	177	**310ML3**		**BE132MA4**	**BX132MA4**	**ME4LA4**	**MX4LA4**		17,200	22,200	6,790
10.5	53,200	1.2	168		**306R4**	**BE132MA4**	**BX132MA4**	**ME4LA4**	**MX4LA4**	**N210TC**	11,500	14,600	3,590
10.7	52,400	1.8	165		**307R4**	**BE132MA4**	**BX132MA4**	**ME4LA4**	**MX4LA4**	**N210TC**	14,400	19,600	4,590
10.7	52,400	2.7	165		**309R4**	**BE132MA4**	**BX132MA4**	**ME4LA4**	**MX4LA4**	**N210TC**	14,400	19,600	3,670
11.0	52,800	1.8	162	**307L3**		**BE132MA4**	**BX132MA4**	**ME4LA4**	**MX4LA4**	**N210TC**	14,300	19,400	4,550
11.0	52,800	2.7	162	**309L3**		**BE132MA4**	**BX132MA4**	**ME4LA4**	**MX4LA4**	**N210TC**	14,300	19,400	3,640
11.2	50,200	0.9	158		**305R4**	**BE132MA4**	**BX132MA4**	**ME4LA4**	**MX4LA4**	**N210TC**	8,260	10,400	2,410
11.2	50,100	1.7	158		**306R4**	**BE132MA4**	**BX132MA4**	**ME4LA4**	**MX4LA4**	**N210TC**	11,300	14,300	3,520
11.6	49,700	1.3	152	**306L3**		**BE132MA4**	**BX132MA4**	**ME4LA4**	**MX4LA4**	**N210TC**	11,200	14,100	3,470
11.6	48,200	2.4	152		**307R4**	**BE132MA4**	**BX132MA4**	**ME4LA4**	**MX4LA4**	**N210TC**	14,000	19,100	4,460
12.1	47,900	2.4	146	**307L3**		**BE132MA4**	**BX132MA4**	**ME4LA4**	**MX4LA4**	**N210TC**	13,900	18,900	4,410
12.3	47,200	1.0	144		**306R3**	**BE132MA4**	**BX132MA4**	**ME4LA4**	**MX4LA4**	**N210TC**	11,000	13,900	3,410
12.5	46,300	1.0	141	**305L3**		**BE132MA4**	**BX132MA4**	**ME4LA4**	**MX4LA4**	**N210TC**	7,990	10,100	2,320
12.6	46,100	1.5	141	**306L3**		**BE132MA4**	**BX132MA4**	**ME4LA4**	**MX4LA4**	**N210TC**	11,000	13,800	3,390
12.8	45,400	2.1	139	**307L3**		**BE132MA4**	**BX132MA4**	**ME4LA4**	**MX4LA4**	**N210TC**	13,600	18,600	4,330
13.7	41,000	1.1	129		**305R4**	**BE132MA4**	**BX132MA4**	**ME4LA4**	**MX4LA4**	**N210TC**	7,770	9,820	2,260
14.1	41,200	2.7	126	**307L3**		**BE132MA4**	**BX132MA4**	**ME4LA4**	**MX4LA4**	**N210TC**	13,300	18,000	4,190
14.6	39,700	1.7	121	**306L3**		**BE132MA4**	**BX132MA4**	**ME4LA4**	**MX4LA4**	**N210TC**	10,500	13,200	3,220
14.8	39,200	1.9	120		**307R3**	**BE132MA4**	**BX132MA4**	**ME4LA4**	**MX4LA4**	**N210TC**	13,100	17,800	4,120
14.8	39,200	2.9	120		**309R3**	**BE132MA4**	**BX132MA4**	**ME4LA4**	**MX4LA4**	**N210TC**	13,100	17,800	3,300
14.9	39,000	1.5	119		**306R3**	**BE132MA4**	**BX132MA4**	**ME4LA4**	**MX4LA4**	**N210TC**	10,400	13,100	3,200
15.6	37,100	2.5	113	**307L3**		**BE132MA4**	**BX132MA4**	**ME4LA4**	**MX4LA4**	**N210TC**	12,800	17,500	4,050
15.8	36,800	1.8	112	**306L3**		**BE132MA4**	**BX132MA4**	**ME4LA4**	**MX4LA4**	**N210TC**	10,200	12,900	3,140
16.9	34,200	0.9	105	**304L3**		**BE132MA4**	**BX132MA4**	**ME4LA4**	**MX4LA4**	**N210TC**	7,290	9,210	2,100
16.9	34,200	1.3	105	**305L3**		**BE132MA4**	**BX132MA4**	**ME4LA4**	**MX4LA4**	**N210TC**	7,290	9,210	2,100
17.0	34,100	2.2	104	**306L3**		**BE132MA4**	**BX132MA4**	**ME4LA4**	**MX4LA4**	**N210TC**	10,000	12,600	3,060
17.9	32,400	2.3	99.0		**307R3**	**BE132MA4**	**BX132MA4**	**ME4LA4**	**MX4LA4**	**N210TC**	12,300	16,800	3,870
18.0	32,200	1.8	98.5		**306R3**	**BE132MA4**	**BX132MA4**	**ME4LA4**	**MX4LA4**	**N210TC**	9,840	12,400	3,000
19.3	29,900	1.1	91.5		**305R3**	**BE132MA4**	**BX132MA4**	**ME4LA4**	**MX4LA4**	**N210TC**	7,010	8,850	2,010
19.6	29,500	1.0	90.2	**304L3**		**BE132MA4**	**BX132MA4**	**ME4LA4**	**MX4LA4**	**N210TC**	6,980	8,820	2,000
19.6	29,500	1.3	90.2	**305L3**		**BE132MA4**	**BX132MA4**	**ME4LA4**	**MX4LA4**	**N210TC**	6,980	8,820	2,000
19.8	28,400	1.0	89.4		**304R4**	**BE132MA4**	**BX132MA4**			**N210TC**	6,960	8,790	1,990
20.1	28,900	2.5	88.3	**306L3**		**BE132MA4**	**BX132MA4**	**ME4LA4**	**MX4LA4**	**N210TC**	9,520	12,000	2,900
20.9	27,700	2.4	84.7		**306R3**	**BE132MA4**	**BX132MA4**	**ME4LA4**	**MX4LA4**	**N210TC**	9,410	11,900	2,860
21.6	26,800	2.2	81.9	**306L3**		**BE132MA4**	**BX132MA4**	**ME4LA4**	**MX4LA4**	**N210TC**	9,310	11,700	2,820
22.5	25,800	1.0	78.7		**304R3**	**BE132MA4**	**BX132MA4**			**N210TC**	6,700	8,460	1,910
22.5	25,800	1.5	78.7		**305R3**	**BE132MA4**	**BX132MA4**	**ME4LA4**	**MX4LA4**	**N210TC**	6,700	8,460	1,910
22.9	25,300	1.2	77.2	**304L3**		**BE132MA4**	**BX132MA4**	**ME4LA4**	**MX4LA4**	**N210TC**	6,660	8,410	1,900

Bonfiglioli Riduttori

P_1 = 10 hp

n_2 rpm	T_2 lb•in	S	i			IE2	IE3	IE2	IE3	NEMA	Rn_2 [lbs] NHC/HC NPC/PC	HZ/PZ	FZ
22.9	25,300	1.6	77.2	**305L3**		**BE132MA4**	**BX132MA4**	**ME4LA4**	**MX4LA4**	**N210TC**	6,660	8,410	1,900
23.0	25,200	2.8	77.0	**306L3**		**BE132MA4**	**BX132MA4**	**ME4LA4**	**MX4LA4**	**N210TC**	9,140	11,500	2,770
24.1	24,000	1.3	73.3		**305R3**	**BE132MA4**	**BX132MA4**	**ME4LA4**	**MX4LA4**	**N210TC**	6,560	8,280	1,870
24.3	23,800	2.7	72.9		**306R3**	**BE132MA4**	**BX132MA4**	**ME4LA4**	**MX4LA4**	**N210TC**	8,990	11,300	2,720
24.4	24,500	1.9	72.5	**306L2**		**BE132MA4**	**BX132MA4**	**ME4LA4**	**MX4LA4**		8,980	11,300	2,710
24.5	23,600	1.2	72.3	**304L3**		**BE132MA4**	**BX132MA4**	**ME4LA4**	**MX4LA4**	**N210TC**	6,530	8,250	1,860
24.5	23,600	1.5	72.3	**305L3**		**BE132MA4**	**BX132MA4**	**ME4LA4**	**MX4LA4**	**N210TC**	6,530	8,250	1,860
26.2	22,100	2.8	67.5		**306R3**	**BE132MA4**	**BX132MA4**	**ME4LA4**	**MX4LA4**	**N210TC**	8,790	11,100	2,650
27.1	21,300	3.0	65.2	**306L3**		**BE132MA4**	**BX132MA4**	**ME4LA4**	**MX4LA4**	**N210TC**	8,700	11,000	2,620
28.1	20,600	1.1	63.1	**303L3**		**BE132MA4**	**BX132MA4**	**ME4LA4**	**MX4LA4**	**N210TC**	6,270	7,920	1,780
28.1	20,600	0.9	63.1		**303R3**	**BE132MA4**	**BX132MA4**			**N210TC**	6,270	7,920	1,780
28.1	20,600	1.5	63.1	**304L3**		**BE132MA4**	**BX132MA4**	**ME4LA4**	**MX4LA4**	**N210TC**	6,270	7,920	1,780
28.1	20,600	1.2	63.1		**304R3**	**BE132MA4**	**BX132MA4**			**N210TC**	6,270	7,920	1,780
28.1	20,600	2.0	63.1	**305L3**		**BE132MA4**	**BX132MA4**	**ME4LA4**	**MX4LA4**	**N210TC**	6,270	7,920	1,780
28.1	20,600	1.9	63.1		**305R3**	**BE132MA4**	**BX132MA4**	**ME4LA4**	**MX4LA4**	**N210TC**	6,270	7,920	1,780
29.9	19,900	1.1	59.1	**304L2**		**BE132MA4**	**BX132MA4**	**ME4LA4**	**MX4LA4**	**N210TC**	6,150	7,770	1,740
31	19,000	2.4	56.3	**306L2**		**BE132MA4**	**BX132MA4**	**ME4LA4**	**MX4LA4**		8,320	10,500	2,490
32	18,800	1.7	55.8	**305L2**		**BE132MA4**	**BX132MA4**	**ME4LA4**	**MX4LA4**	**N210TC**	6,040	7,630	1,700
33	17,500	1.1	53.4	**303L3**		**BE132MA4**	**BX132MA4**	**ME4LA4**	**MX4LA4**	**N210TC**	5,960	7,530	1,680
33	17,700	0.9	54.2		**303R3**	**BE132MA4**	**BX132MA4**			**N210TC**	5,990	7,570	1,690
33	17,500	1.6	53.4	**304L3**		**BE132MA4**	**BX132MA4**	**ME4LA4**	**MX4LA4**	**N210TC**	5,960	7,530	1,680
33	17,500	2.0	53.4	**305L3**		**BE132MA4**	**BX132MA4**	**ME4LA4**	**MX4LA4**	**N210TC**	5,960	7,530	1,680
33	17,700	1.8	54.2		**305R3**	**BE132MA4**	**BX132MA4**	**ME4LA4**	**MX4LA4**	**N210TC**	5,990	7,570	1,690
35	16,400	1.3	50.3		**303R3**	**BE132MA4**	**BX132MA4**			**N210TC**	5,860	7,400	1,650
35	16,400	1.9	50.3		**304R3**	**BE132MA4**	**BX132MA4**			**N210TC**	5,860	7,400	1,650
35	16,400	2.3	50.3		**305R3**	**BE132MA4**	**BX132MA4**	**ME4LA4**	**MX4LA4**	**N210TC**	5,860	7,400	1,650
37	16,000	1.3	47.3	**304L2**		**BE132MA4**	**BX132MA4**	**ME4LA4**	**MX4LA4**	**N210TC**	5,750	7,260	1,610
38	15,200	1.2	46.6		**303R3**	**BE132MA4**	**BX132MA4**			**N210TC**	5,720	7,230	1,610
38	15,200	1.7	46.6		**304R3**	**BE132MA4**	**BX132MA4**			**N210TC**	5,720	7,230	1,610
38	15,200	2.5	46.6		**305R3**	**BE132MA4**	**BX132MA4**	**ME4LA4**	**MX4LA4**	**N210TC**	5,720	7,230	1,610
40	15,100	1.1	44.6	**303L2**		**BE132MA4**	**BX132MA4**	**ME4LA4**	**MX4LA4**	**N210TC**	5,650	7,140	1,580
40	15,100	2.1	44.6	**305L2**		**BE132MA4**	**BX132MA4**	**ME4LA4**	**MX4LA4**	**N210TC**	5,650	7,140	1,580
41	14,300	2.0	43.6	**304L3**		**BE132MA4**	**BX132MA4**	**ME4LA4**	**MX4LA4**	**N210TC**	5,610	7,090	1,570
42	13,900	1.3	42.6		**303R3**	**BE132MA4**	**BX132MA4**			**N210TC**	5,570	7,040	1,560
42	13,900	2.0	42.6		**304R3**	**BE132MA4**	**BX132MA4**			**N210TC**	5,570	7,040	1,560
42	13,900	2.4	42.6		**305R3**	**BE132MA4**	**BX132MA4**	**ME4LA4**	**MX4LA4**	**N210TC**	5,570	7,040	1,560
46	12,900	1.0	38.4	**301L2**		**BE132MA4**	**BX132MA4**	**ME4LA4**	**MX4LA4**	**N210TC**	2,810	3,340	500
46	13,000	1.5	38.4	**303L2**		**BE132MA4**	**BX132MA4**	**ME4LA4**	**MX4LA4**	**N210TC**	5,400	6,820	1,500
46	13,000	1.9	38.4	**304L2**		**BE132MA4**	**BX132MA4**	**ME4LA4**	**MX4LA4**	**N210TC**	5,400	6,820	1,500
46	13,000	2.9	38.4	**305L2**		**BE132MA4**	**BX132MA4**	**ME4LA4**	**MX4LA4**	**N210TC**	5,400	6,820	1,500
48	12,200	1.2	37.3		**301R3**	**BE132MA4**	**BX132MA4**			**N210TC**	2,790	3,310	500
48	12,200	1.7	37.1		**303R3**	**BE132MA4**	**BX132MA4**			**N210TC**	5,350	6,750	1,490
48	12,200	2.5	37.1		**304R3**	**BE132MA4**	**BX132MA4**			**N210TC**	5,350	6,750	1,490
49	12,100	1.3	35.8	**303L2**		**BE132MA4**	**BX132MA4**	**ME4LA4**	**MX4LA4**	**N210TC**	5,290	6,680	1,470
49	12,100	2.6	35.8	**305L2**		**BE132MA4**	**BX132MA4**	**ME4LA4**	**MX4LA4**	**N210TC**	5,290	6,680	1,470
53	11,200	1.0	33.3	**301L2**		**BE132MA4**	**BX132MA4**	**ME4LA4**	**MX4LA4**	**N210TC**	2,700	3,200	480
56	10,300	1.7	31.5		**303R3**	**BE132MA4**	**BX132MA4**			**N210TC**	5,090	6,430	1,410
56	10,300	2.6	31.5		**304R3**	**BE132MA4**	**BX132MA4**			**N210TC**	5,090	6,430	1,410
58	10,400	1.3	30.7	**301L2**		**BE132MA4**	**BX132MA4**	**ME4LA4**	**MX4LA4**	**N210TC**	2,630	3,120	470
58	9,950	1.3	30.4		**301R3**	**BE132MA4**	**BX132MA4**			**N210TC**	2,620	3,110	460
58	10,400	1.8	30.8	**303L2**		**BE132MA4**	**BX132MA4**	**ME4LA4**	**MX4LA4**	**N210TC**	5,050	6,380	1,400
58	10,400	2.4	30.8	**304L2**		**BE132MA4**	**BX132MA4**	**ME4LA4**	**MX4LA4**	**N210TC**	5,050	6,380	1,400
67	8,910	1.8	26.4	**303L2**		**BE132MA4**	**BX132MA4**	**ME4LA4**	**MX4LA4**	**N210TC**	4,830	6,100	1,330
69	8,400	2.0	25.7		**303R3**	**BE132MA4**	**BX132MA4**			**N210TC**	4,790	6,050	1,320
71	8,120	1.5	24.8		**301R3**	**BE132MA4**	**BX132MA4**			**N210TC**	2,470	2,930	430
71	8,350	0.9	24.8		**303R2**	**BE132MA4**	**BX132MA4**	**ME4LA4**	**MX4LA4**	**N210TC**	4,740	5,980	1,300
72	8,300	1.5	24.6	**301L2**		**BE132MA4**	**BX132MA4**	**ME4LA4**	**MX4LA4**	**N210TC**	2,460	2,920	430
72	8,270	2.2	24.5	**303L2**		**BE132MA4**	**BX132MA4**	**ME4LA4**	**MX4LA4**	**N210TC**	4,720	5,960	1,300
78	7,670	2.4	22.7	**303L2**		**BE132MA4**	**BX132MA4**	**ME4LA4**	**MX4LA4**	**N210TC**	4,620	5,830	1,260
85	7,000	2.2	20.8	**303L2**		**BE132MA4**	**BX132MA4**	**ME4LA4**	**MX4LA4**	**N210TC**	4,490	5,670	1,230

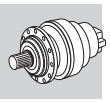

A

P_1 = 10 hp

n_2 rpm	T_2 lb•in	S	i			IE2	IE3	IE2	IE3	NEMA	Rn_2 [lbs] NHC/HC NPC/PC	HZ/PZ	FZ
88	6,770	1.6	20.1	**301L2**		**BE132MA4**	**BX132MA4**	**ME4LA4**	**MX4LA4**	**N210TC**	2,320	2,750	400
92	6,480	2.1	19.2		**303R2**	**BE132MA4**	**BX132MA4**	**ME4LA4**	**MX4LA4**	**N210TC**	4,390	5,540	1,190
96	6,220	1.1	18.5		**301R2**	**BE132MA4**	**BX132MA4**	**ME4LA4**	**MX4LA4**	**N210TC**	2,260	2,680	390
97	6,130	1.0	18.2	**300L2**		**BE132MA4**	**BX132MA4**	**ME4LA4**	**MX4LA4**	**N210TC**	2,250	2,840	390
97	6,130	1.9	18.2	**301L2**		**BE132MA4**	**BX132MA4**	**ME4LA4**	**MX4LA4**	**N210TC**	2,250	2,670	390
98	6,110	2.8	18.1	**303L2**		**BE132MA4**	**BX132MA4**	**ME4LA4**	**MX4LA4**	**N210TC**	4,310	5,450	1,170
111	5,360	2.9	15.9		**303R2**	**BE132MA4**	**BX132MA4**	**ME4LA4**	**MX4LA4**	**N210TC**	4,140	5,240	1,120
115	5,180	2.8	15.3	**303L2**		**BE132MA4**	**BX132MA4**	**ME4LA4**	**MX4LA4**	**N210TC**	4,100	5,180	1,110
119	5,000	1.2	14.8	**300L2**		**BE132MA4**	**BX132MA4**	**ME4LA4**	**MX4LA4**	**N210TC**	2,120	2,670	370
119	5,000	2.1	14.8	**301L2**		**BE132MA4**	**BX132MA4**	**ME4LA4**	**MX4LA4**	**N210TC**	2,120	2,510	370
120	4,980	1.6	14.8		**301R2**	**BE132MA4**	**BX132MA4**	**ME4LA4**	**MX4LA4**	**N210TC**	2,110	2,510	360
146	4,080	1.4	12.1	**300L2**		**BE132MA4**	**BX132MA4**	**ME4LA4**	**MX4LA4**	**N210TC**	1,990	2,510	340
146	4,080	2.5	12.1	**301L2**		**BE132MA4**	**BX132MA4**	**ME4LA4**	**MX4LA4**	**N210TC**	1,990	2,360	340
150	3,990	1.2	11.8		**300R2**	**BE132MA4**	**BX132MA4**	**ME4LA4**	**MX4LA4**	**N210TC**	1,980	2,500	340
150	3,990	2.4	11.8		**301R2**	**BE132MA4**	**BX132MA4**	**ME4LA4**	**MX4LA4**	**N210TC**	1,980	2,350	340
183	3,360	1.9	9.67	**303L1**		**BE132MA4**	**BX132MA4**	**ME4LA4**	**MX4LA4**		3,570	4,510	950
197	3,130	1.7	9.00	**301L1**		**BE132MA4**	**BX132MA4**	**ME4LA4**	**MX4LA4**	**N210TC**	1,820	2,160	310
203	2,950	1.7	8.74		**300R2**	**BE132MA4**	**BX132MA4**	**ME4LA4**	**MX4LA4**	**N210TC**	1,810	2,280	310
246	2,500	1.4	7.20	**300L1**		**BE132MA4**	**BX132MA4**	**ME4LA4**	**MX4LA4**	**N210TC**	1,700	2,150	290
246	2,500	2.5	7.20	**301L1**		**BE132MA4**	**BX132MA4**	**ME4LA4**	**MX4LA4**	**N210TC**	1,700	2,020	290
248	2,410	2.0	7.13		**300R2**	**BE132MA4**	**BX132MA4**	**ME4LA4**	**MX4LA4**	**N210TC**	1,700	2,140	290
307	2,010	2.0	5.77	**300L1**		**BE132MA4**	**BX132MA4**	**ME4LA4**	**MX4LA4**	**N210TC**	1,590	2,010	270
415	1,480	2.8	4.26	**300L1**		**BE132MA4**	**BX132MA4**	**ME4LA4**	**MX4LA4**	**N210TC**	1,460	1,840	240

P_1 = 15 hp

n_2 rpm	T_2 lb•in	S	i			IE2	IE3	IE2	IE3	NEMA	Rn_2 [lbs] NHC/HC NPC/PC	HZ/PZ	FZ
0.94	879,400	1.5	1893	**317ML4**		**BE160M4**	**BX160MB4**	**ME5SA4**	**MX5SB4**	**N250TC**	89,800	95,400	33,700
1.1	721,500	1.5	1553	**316ML4**		**BE160M4**	**BX160MB4**	**ME5SA4**	**MX5SB4**	**N250TC**	56,100	62,900	32,300
1.1	741,000	1.9	1595	**317ML4**		**BE160M4**	**BX160MB4**	**ME5SA4**	**MX5SB4**	**N250TC**	87,600	93,100	32,600
1.2	693,400	1.0	1492	**315ML4**		**BE160M4**	**BX160MB4**	**ME5SA4**	**MX5SB4**	**N250TC**	35,800	43,700	19,100
1.3	612,500	2.3	1318	**317ML4**		**BE160M4**	**BX160MB4**	**ME5SA4**	**MX5SB4**	**N250TC**	85,300	90,600	30,600
1.4	593,500	1.1	1269	**314ML4**		**BE160M4**	**BX160MB4**	**ME5SA4**	**MX5SB4**	**N250TC**	35,000	42,700	18,100
1.4	596,500	1.3	1284	**315ML4**		**BE160M4**	**BX160MB4**	**ME5SA4**	**MX5SB4**	**N250TC**	35,000	42,800	18,200
1.4	575,000	1.8	1237	**316ML4**		**BE160M4**	**BX160MB4**	**ME5SA4**	**MX5SB4**	**N250TC**	54,300	60,900	29,900
1.4	608,000	1.7	1308	**316ML4**		**BE160M4**	**BX160MB4**	**ME5SA4**	**MX5SB4**	**N250TC**	54,700	61,400	30,500
1.6	510,600	1.2	1099	**314ML4**		**BE160M4**	**BX160MB4**	**ME5SA4**	**MX5SB4**	**N250TC**	34,300	41,800	17,300
1.6	513,100	1.5	1104	**315ML4**		**BE160M4**	**BX160MB4**	**ME5SA4**	**MX5SB4**	**N250TC**	34,300	41,900	17,300
1.6	513,100	2.0	1104	**316ML4**		**BE160M4**	**BX160MB4**	**ME5SA4**	**MX5SB4**	**N250TC**	53,400	59,900	28,800
1.6	526,900	2.6	1134	**317ML4**		**BE160M4**	**BX160MB4**	**ME5SA4**	**MX5SB4**	**N250TC**	83,400	88,600	29,100
1.7	471,200	1.0	1014	**313ML4**		**BE160M4**	**BX160MB4**			**N250TC**	34,700	43,500	14,900
1.7	482,100	1.4	1038	**314ML4**		**BE160M4**	**BX160MB4**	**ME5SA4**	**MX5SB4**	**N250TC**	34,000	41,500	16,900
1.7	484,500	1.8	1043	**315ML4**		**BE160M4**	**BX160MB4**	**ME5SA4**	**MX5SB4**	**N250TC**	34,000	41,500	17,000
1.7	473,700	2.2	1020	**316ML4**		**BE160M4**	**BX160MB4**	**ME5SA4**	**MX5SB4**	**N250TC**	52,800	59,300	28,100
1.9	430,200	1.4	926	**314ML4**		**BE160M4**	**BX160MB4**	**ME5SA4**	**MX5SB4**	**N250TC**	33,500	40,800	16,300
1.9	432,300	1.8	930	**315ML4**		**BE160M4**	**BX160MB4**	**ME5SA4**	**MX5SB4**	**N250TC**	33,500	40,900	16,300
1.9	422,500	1.5	909		**315MR4**	**BE160M4**	**BX160MB4**	**ME5SA4**	**MX5SB4**	**N250TC**	33,400	40,700	16,200
1.9	443,000	2.7	953		**317MR4**	**BE160M4**	**BX160MB4**	**ME5SA4**	**MX5SB4**	**N250TC**	81,400	86,500	27,400
2.0	413,200	1.1	889	**313ML4**		**BE160M4**	**BX160MB4**			**N250TC**	34,100	42,700	14,300
2.0	408,900	2.5	880	**316ML4**		**BE160M4**	**BX160MB4**	**ME5SA4**	**MX5SB4**	**N250TC**	51,700	58,000	26,700
2.1	383,200	1.0	825	**311ML4**		**BE160M4**	**BX160MB4**			**N250TC**	24,300	25,400	11,300
2.1	398,500	1.6	858	**314ML4**		**BE160M4**	**BX160MB4**	**ME5SA4**	**MX5SB4**	**N250TC**	33,100	40,400	15,900
2.1	400,500	2.1	862	**315ML4**		**BE160M4**	**BX160MB4**	**ME5SA4**	**MX5SB4**	**N250TC**	33,100	40,400	15,900
2.2	367,000	1.2	790	**313ML4**		**BE160M4**	**BX160MB4**			**N250TC**	33,500	42,000	13,700

P_1 = 15 hp

n_2 rpm	T_2 lb•in	S	i			IE2	IE3	IE2	IE3	NEMA	Rn_2 [lbs] NHC/HC NPC/PC	HZ/PZ	FZ
2.3	363,400	2.1	782		**315MR4**	**BE160M4**	**BX160MB4**	**ME5SA4**	**MX5SB4**	**N250TC**	32,700	39,900	15,400
2.3	364,300	2.7	784	**316ML4**		**BE160M4**	**BX160MB4**	**ME5SA4**	**MX5SB4**	**N250TC**	50,900	57,100	25,700
2.3	363,400	2.7	782		**316MR4**	**BE160M4**	**BX160MB4**	**ME5SA4**	**MX5SB4**	**N250TC**	50,900	57,100	25,700
2.4	342,800	1.9	738	**314ML4**		**BE160M4**	**BX160MB4**	**ME5SA4**	**MX5SB4**	**N250TC**	32,400	39,500	15,100
2.4	344,500	2.4	741	**315ML4**		**BE160M4**	**BX160MB4**	**ME5SA4**	**MX5SB4**	**N250TC**	32,400	39,600	15,100
2.5	323,000	1.3	695	**313ML4**		**BE160M4**	**BX160MB4**			**N250TC**	32,900	41,200	13,200
2.5	329,400	3.0	706	**316ML4**		**BE160M4**	**BX160MB4**	**ME5SA4**	**MX5SB4**	**N250TC**	50,100	56,200	24,800
2.6	310,500	2.2	668	**314ML4**		**BE160M4**	**BX160MB4**	**ME5SA4**	**MX5SB4**	**N250TC**	31,900	39,000	14,600
2.6	312,100	2.7	672	**315ML4**		**BE160M4**	**BX160MB4**	**ME5SA4**	**MX5SB4**	**N250TC**	32,000	39,000	14,600
2.7	300,500	1.4	647		**313MR4**	**BE160M4**	**BX160MB4**			**N250TC**	32,600	40,800	12,900
2.7	306,200	2.4	659		**315MR4**	**BE160M4**	**BX160MB4**	**ME5SA4**	**MX5SB4**	**N250TC**	31,900	38,900	14,600
2.8	291,200	1.2	627	**311ML4**		**BE160M4**	**BX160MB4**			**N250TC**	23,400	24,400	10,300
2.8	292,100	1.2	629		**311MR4**	**BE160M4**	**BX160MB4**			**N250TC**	23,400	24,400	10,300
2.8	294,100	1.5	633	**313ML4**		**BE160M4**	**BX160MB4**			**N250TC**	32,500	40,600	12,800
2.8	289,600	2.9	623		**315MR4**	**BE160M4**	**BX160MB4**	**ME5SA4**	**MX5SB4**	**N250TC**	31,600	38,600	14,300
2.9	285,200	1.6	614		**314MR4**	**BE160M4**	**BX160MB4**			**N250TC**	31,500	38,500	14,200
3.0	273,200	2.3	588	**314ML4**		**BE160M4**	**BX160MB4**	**ME5SA4**	**MX5SB4**	**N250TC**	31,300	38,300	14,000
3.1	263,800	1.3	568	**311ML4**		**BE160M4**	**BX160MB4**			**N250TC**	23,000	24,000	10,000
3.1	253,900	1.8	564	**313ML4**		**BE160M4**	**BX160MB4**			**N250TC**	31,900	40,000	12,300
3.1	267,100	2.2	575	**314ML4**		**BE160M4**	**BX160MB4**	**ME5SA4**	**MX5SB4**	**N250TC**	31,200	38,100	13,900
3.3	248,400	1.7	535		**313MR4**	**BE160M4**	**BX160MB4**			**N250TC**	31,700	39,700	12,100
3.4	241,500	1.4	520		**311MR4**	**BE160M4**	**BX160MB4**			**N250TC**	22,800	23,700	9,710
3.4	238,700	1.7	514	**313ML4**		**BE160M4**	**BX160MB4**			**N250TC**	31,500	39,500	11,900
3.4	237,300	2.3	528		**314MR4**	**BE160M4**	**BX160MB4**			**N250TC**	30,900	37,700	13,500
3.5	235,700	0.9	507	**310ML4**		**BE160M4**	**BX160MB4**			**N250TC**	18,100	23,400	9,630
3.5	237,900	1.7	512	**311ML4**		**BE160M4**	**BX160MB4**			**N250TC**	22,700	23,700	9,660
3.6	227,600	1.2	490		**311MR4**	**BE160M4**	**BX160MB4**			**N250TC**	22,600	23,500	9,520
3.6	230,500	1.9	496		**313MR4**	**BE160M4**	**BX160MB4**			**N250TC**	31,400	39,300	11,800
3.6	229,800	2.9	495	**314ML4**		**BE160M4**	**BX160MB4**	**ME5SA4**	**MX5SB4**	**N250TC**	30,600	37,300	13,200
3.9	210,600	1.2	453	**310ML4**		**BE160M4**	**BX160MB4**			**N250TC**	17,800	23,000	9,280
3.9	209,900	2.4	452	**313ML4**		**BE160M4**	**BX160MB4**			**N250TC**	30,900	38,700	11,400
3.9	209,300	1.9	450		**313MR4**	**BE160M4**	**BX160MB4**			**N250TC**	30,900	38,700	11,400
4.0	203,500	1.7	438		**311MR4**	**BE160M4**	**BX160MB4**			**N250TC**	22,200	23,200	9,170
4.0	206,700	2.4	445		**314MR4**	**BE160M4**	**BX160MB4**			**N250TC**	30,100	36,800	12,800
4.2	195,500	3.0	421		**314MR4**	**BE160M4**	**BX160MB4**			**N250TC**	29,900	36,500	12,500
4.3	190,700	2.1	410	**311ML4**		**BE160M4**	**BX160MB4**			**N250TC**	22,000	23,000	8,980
4.3	191,800	1.7	413		**311MR4**	**BE160M4**	**BX160MB4**			**N250TC**	22,000	23,000	8,990
4.5	183,100	2.7	394	**313ML4**		**BE160M4**	**BX160MB4**			**N250TC**	30,300	38,000	10,900
4.6	177,800	1.1	383		**310MR4**	**BE160M4**	**BX160MB4**			**N250TC**	17,400	22,500	8,770
4.6	180,000	2.2	387		**313MR4**	**BE160M4**	**BX160MB4**			**N250TC**	30,300	37,900	10,800
5.1	162,200	1.2	349	**309L4**		**BE160M4**	**BX160MB4**			**N250TC**	14,700	20,000	4,710
5.1	167,900	0.9	350	**310ML3**		**BE160M4**	**BX160MB4**	**ME5SA4**	**MX5SB4**	**N250TC**	17,200	22,200	8,520
5.1	161,100	1.6	347		**310MR4**	**BE160M4**	**BX160MB4**			**N250TC**	17,200	22,200	8,490
5.1	161,500	2.5	348	**311ML4**		**BE160M4**	**BX160MB4**			**N250TC**	21,500	22,500	8,490
5.2	158,500	2.0	341		**311MR4**	**BE160M4**	**BX160MB4**			**N250TC**	21,500	22,500	8,440
5.3	153,900	1.0	321		**309R4**	**BE160M4**	**BX160MB4**			**N250TC**	14,700	20,000	4,630
5.7	143,500	2.6	309		**313MR4**	**BE160M4**	**BX160MB4**			**N250TC**	29,900	37,400	10,000
5.8	141,700	1.4	305		**310MR4**	**BE160M4**	**BX160MB4**			**N250TC**	17,200	22,200	8,130
5.8	145,500	1.8	304	**313ML3**		**BE160M4**	**BX160MB4**	**ME5SA4**	**MX5SB4**	**N250TC**	29,900	37,400	9,990
6.0	141,500	1.4	295	**310ML3**		**BE160M4**	**BX160MB4**	**ME5SA4**	**MX5SB4**	**N250TC**	17,200	22,200	8,040
6.0	136,400	2.4	294		**311MR4**	**BE160M4**	**BX160MB4**			**N250TC**	21,500	22,500	8,030
6.1	139,500	1.7	291	**311ML3**		**BE160M4**	**BX160MB4**	**ME5SA4**	**MX5SB4**	**N250TC**	21,500	22,500	8,010
6.2	135,800	1.0	284	**309L3**		**BE160M4**	**BX160MB4**			**N250TC**	14,700	20,000	4,400
6.2	132,200	1.1	284		**309R4**	**BE160M4**	**BX160MB4**			**N250TC**	14,700	20,000	4,400
6.4	128,300	1.9	276		**310MR4**	**BE160M4**	**BX160MB4**			**N250TC**	17,200	22,200	7,870
6.7	124,000	3.0	266		**311MR4**	**BE160M4**	**BX160MB4**			**N250TC**	21,500	22,500	7,770
6.9	119,900	1.1	258		**307R4**	**BE160M4**	**BX160MB4**			**N250TC**	14,700	20,000	5,320
6.9	119,900	1.3	258		**309R4**	**BE160M4**	**BX160MB4**			**N250TC**	14,700	20,000	4,260
6.9	120,000	1.6	258		**310MR4**	**BE160M4**	**BX160MB4**			**N250TC**	17,200	22,200	7,690
7.1	119,400	1.3	249	**310ML3**		**BE160M4**	**BX160MB4**	**ME5SA4**	**MX5SB4**	**N250TC**	17,200	22,200	7,600

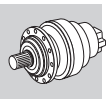

A

P_1 = 15 hp

n_2 rpm	T_2 lb•in	S	i			IE2	IE3	IE2	IE3	NEMA	Rn_2 [lbs] NHC/HC NPC/PC	HZ/PZ	FZ
7.2	117,500	2.7	237	**311ML3**		**BE160M4**	**BX160MB4**	**ME5SA4**	**MX5SB4**	**N250TC**	21,500	22,500	7,560
7.4	114,600	1.0	239	**309L3**		**BE160M4**	**BX160MB4**			**N250TC**	14,700	20,000	4,150
7.4	110,400	2.2	238		**310MR4**	**BE160M4**	**BX160MB4**			**N250TC**	17,200	22,200	7,480
7.6	107,900	0.9	232		**307R4**	**BE160M4**	**BX160MB4**			**N250TC**	14,700	20,000	5,140
7.6	107,900	1.4	232		**309R4**	**BE160M4**	**BX160MB4**			**N250TC**	14,700	20,000	4,110
7.7	110,200	1.6	230	**310ML3**		**BE160M4**	**BX160MB4**	**ME5SA4**	**MX5SB4**	**N250TC**	17,200	22,200	7,400
7.9	106,800	1.1	223	**309L3**		**BE160M4**	**BX160MB4**			**N250TC**	14,700	20,000	4,060
8.0	105,800	1.1	221	**307L3**		**BE160M4**	**BX160MB4**			**N250TC**	14,700	20,000	5,060
8.6	95,500	1.3	206		**307R4**	**BE160M4**	**BX160MB4**			**N250TC**	14,700	20,000	4,940
8.6	95,500	1.8	206		**309R4**	**BE160M4**	**BX160MB4**			**N250TC**	14,700	20,000	3,950
8.6	95,600	2.0	206		**310MR4**	**BE160M4**	**BX160MB4**			**N250TC**	17,200	22,200	7,130
8.8	96,600	1.0	202	**307L3**		**BE160M4**	**BX160MB4**			**N250TC**	14,700	20,000	4,900
8.8	96,600	1.5	202	**309L3**		**BE160M4**	**BX160MB4**			**N250TC**	14,700	20,000	3,920
8.8	96,700	2.0	202	**310ML3**		**BE160M4**	**BX160MB4**	**ME5SA4**	**MX5SB4**	**N250TC**	17,200	22,200	7,090
8.9	92,400	3.0	198		**311MR4**	**BE160M4**	**BX160MB4**			**N250TC**	21,500	22,500	7,040
9.3	88,600	1.4	191		**307R4**	**BE160M4**	**BX160MB4**			**N250TC**	14,700	20,000	4,810
9.3	88,600	1.7	191		**309R4**	**BE160M4**	**BX160MB4**			**N250TC**	14,700	20,000	3,850
9.3	88,000	2.7	189		**310MR4**	**BE160M4**	**BX160MB4**			**N250TC**	17,200	22,200	6,940
9.7	87,500	1.4	183	**309L3**		**BE160M4**	**BX160MB4**			**N250TC**	14,700	20,000	3,800
9.8	84,100	1.0	181		**306R4**	**BE160M4**	**BX160MB4**			**N250TC**	11,700	14,800	3,680
10.0	84,800	1.3	177	**307L3**		**BE160M4**	**BX160MB4**			**N250TC**	14,700	20,000	4,700
10.0	84,900	1.9	177	**310ML3**		**BE160M4**	**BX160MB4**	**ME5SA4**	**MX5SB4**	**N250TC**	17,200	22,200	6,790
10.7	76,700	1.2	165		**307R4**	**BE160M4**	**BX160MB4**			**N250TC**	14,400	19,600	4,590
10.7	76,700	1.8	165		**309R4**	**BE160M4**	**BX160MB4**			**N250TC**	14,400	19,600	3,670
10.8	78,400	2.9	164	**310ML3**		**BE160M4**	**BX160MB4**	**ME5SA4**	**MX5SB4**	**N250TC**	16,800	21,700	6,610
11.0	77,400	1.2	162	**307L3**		**BE160M4**	**BX160MB4**			**N250TC**	14,300	19,400	4,550
11.0	77,400	1.8	162	**309L3**		**BE160M4**	**BX160MB4**			**N250TC**	14,300	19,400	3,640
11.0	74,500	3.0	160		**310MR4**	**BE160M4**	**BX160MB4**			**N250TC**	16,700	21,600	6,560
11.2	73,300	1.1	158		**306R4**	**BE160M4**	**BX160MB4**			**N250TC**	11,300	14,300	3,520
11.6	72,800	0.9	152	**306L3**		**BE160M4**	**BX160MB4**			**N250TC**	11,200	14,100	3,470
11.6	70,600	1.6	152		**307R4**	**BE160M4**	**BX160MB4**			**N250TC**	14,000	19,100	4,460
11.6	70,600	2.2	152		**309R4**	**BE160M4**	**BX160MB4**			**N250TC**	14,000	19,100	3,570
11.9	71,500	2.7	149	**310ML3**		**BE160M4**	**BX160MB4**	**ME5SA4**	**MX5SB4**	**N250TC**	16,400	21,100	6,410
12.1	70,100	1.6	146	**307L3**		**BE160M4**	**BX160MB4**			**N250TC**	13,900	18,900	4,410
12.6	67,500	1.0	141	**306L3**		**BE160M4**	**BX160MB4**			**N250TC**	11,000	13,800	3,390
12.8	66,500	1.4	139	**307L3**		**BE160M4**	**BX160MB4**			**N250TC**	13,600	18,600	4,330
12.8	66,500	2.1	139	**309L3**		**BE160M4**	**BX160MB4**			**N250TC**	13,600	18,600	3,460
14.1	60,300	1.8	126	**307L3**		**BE160M4**	**BX160MB4**			**N250TC**	13,300	18,000	4,190
14.1	60,300	2.3	126	**309L3**		**BE160M4**	**BX160MB4**			**N250TC**	13,300	18,000	3,350
14.6	58,100	1.2	121	**306L3**		**BE160M4**	**BX160MB4**			**N250TC**	10,500	13,200	3,220
14.8	57,400	1.3	120		**307R3**	**BE160M4**	**BX160MB4**			**N250TC**	13,100	17,800	4,120
14.8	57,400	2.0	120		**309R3**	**BE160M4**	**BX160MB4**			**N250TC**	13,100	17,800	3,300
14.8	57,400	2.6	120		**310MR3**	**BE160M4**	**BX160MB4**			**N250TC**	15,300	19,800	5,950
14.9	57,100	1.0	119		**306R3**	**BE160M4**	**BX160MB4**			**N250TC**	10,400	13,100	3,200
15.6	54,300	1.7	113	**307L3**		**BE160M4**	**BX160MB4**			**N250TC**	12,800	17,500	4,050
15.6	54,300	2.5	113	**309L3**		**BE160M4**	**BX160MB4**			**N250TC**	12,800	17,500	3,240
15.8	53,800	1.2	112	**306L3**		**BE160M4**	**BX160MB4**			**N250TC**	10,200	12,900	3,140
17.0	49,900	1.5	104	**306L3**		**BE160M4**	**BX160MB4**			**N250TC**	10,000	12,600	3,060
17.6	48,000	2.2	100	**307L3**		**BE160M4**	**BX160MB4**			**N250TC**	12,400	16,800	3,890
17.6	48,000	2.9	100	**309L3**		**BE160M4**	**BX160MB4**			**N250TC**	12,400	16,800	3,110
17.9	47,400	1.6	99.0		**307R3**	**BE160M4**	**BX160MB4**			**N250TC**	12,300	16,800	3,870
17.9	47,400	2.4	99.0		**309R3**	**BE160M4**	**BX160MB4**			**N250TC**	12,300	16,800	3,090
17.9	47,400	2.9	99.0		**310MR3**	**BE160M4**	**BX160MB4**			**N250TC**	14,500	18,700	5,590
18.0	47,200	1.2	98.5		**306R3**	**BE160M4**	**BX160MB4**			**N250TC**	9,840	12,400	3,000
19.0	44,600	2.3	93.0	**307L3**		**BE160M4**	**BX160MB4**			**N250TC**	12,100	16,500	3,790
19.0	44,600	2.9	93.0	**309L3**		**BE160M4**	**BX160MB4**			**N250TC**	12,100	16,500	3,030
20.1	42,300	1.7	88.3	**306L3**		**BE160M4**	**BX160MB4**			**N250TC**	9,520	12,000	2,900
20.9	40,600	1.6	84.7		**306R3**	**BE160M4**	**BX160MB4**			**N250TC**	9,410	11,900	2,860
21.2	40,000	2.2	83.4		**307R3**	**BE160M4**	**BX160MB4**			**N250TC**	11,700	15,900	3,650
21.2	40,000	3.0	83.4		**309R3**	**BE160M4**	**BX160MB4**			**N250TC**	11,700	15,900	2,920

Bonfiglioli Riduttori

P_1 = 15 hp

n_2 rpm	T_2 lb•in	S	i			IE2	IE3	IE2	IE3	NEMA	Rn_2 [lbs] NHC/HC NPC/PC	HZ/PZ	FZ
21.6	39,200	1.5	81.9	**306L3**		**BE160M4**	**BX160MB4**			**N250TC**	9,310	11,700	2,820
22.0	38,600	2.3	80.6	**307L3**		**BE160M4**	**BX160MB4**			**N250TC**	11,600	15,800	3,610
22.5	37,800	1.0	78.7		**305R3**					**N250TC**	6,700	8,460	1,910
22.5	37,700	2.5	78.6		**307R3**	**BE160M4**	**BX160MB4**			**N250TC**	11,500	15,600	3,580
22.9	37,000	1.1	77.2	**305L3**		**BE160M4**	**BX160MB4**			**N250TC**	6,660	8,410	1,900
23.0	36,900	1.9	77.0	**306L3**		**BE160M4**	**BX160MB4**			**N250TC**	9,140	11,500	2,770
23.9	35,500	2.8	74.1	**307L3**		**BE160M4**	**BX160MB4**			**N250TC**	11,300	15,400	3,510
24.3	34,900	1.9	72.9		**306R3**	**BE160M4**	**BX160MB4**			**N250TC**	8,990	11,300	2,720
24.4	35,800	1.3	72.5	**306L2**		**BE160M4**	**BX160MB4**	**ME5SA4**	**MX5SB4**	**N250TC**	8,980	11,300	2,710
24.5	34,600	1.0	72.3	**305L3**		**BE160M4**	**BX160MB4**			**N250TC**	6,530	8,250	1,860
24.7	34,400	2.6	71.8		**307R3**	**BE160M4**	**BX160MB4**			**N250TC**	11,200	15,200	3,480
26.2	32,300	1.9	67.5		**306R3**	**BE160M4**	**BX160MB4**			**N250TC**	8,790	11,100	2,650
27.1	31,200	2.0	65.2	**306L3**		**BE160M4**	**BX160MB4**			**N250TC**	8,700	11,000	2,620
27.2	31,200	3.0	65.0		**307R3**	**BE160M4**	**BX160MB4**			**N250TC**	10,900	14,800	3,360
28.1	30,200	1.0	63.1	**304L3**		**BE160M4**	**BX160MB4**			**N250TC**	6,270	7,920	1,780
28.1	30,200	1.4	63.1	**305L3**		**BE160M4**	**BX160MB4**			**N250TC**	6,270	7,920	1,780
28.1	30,300	1.3	63.1		**305R3**					**N250TC**	6,270	7,920	1,780
30	27,800	2.3	58.1		**306R3**	**BE160M4**	**BX160MB4**			**N250TC**	8,400	10,600	2,520
31	27,800	1.6	56.3	**306L2**		**BE160M4**	**BX160MB4**	**ME5SA4**	**MX5SB4**	**N250TC**	8,320	10,500	2,490
32	27,600	1.1	55.8	**305L2**		**BE160M4**	**BX160MB4**			**N250TC**	6,040	7,630	1,700
33	25,600	1.1	53.4	**304L3**		**BE160M4**	**BX160MB4**			**N250TC**	5,960	7,530	1,680
33	25,600	1.4	53.4	**305L3**		**BE160M4**	**BX160MB4**			**N250TC**	5,960	7,530	1,680
33	26,000	1.2	54.2		**305R3**					**N250TC**	5,990	7,570	1,690
33	25,500	2.4	53.2	**306L3**		**BE160M4**	**BX160MB4**			**N250TC**	8,180	10,300	2,450
35	24,200	1.3	50.3		**304R3**					**N250TC**	5,860	7,400	1,650
35	24,200	1.6	50.3		**305R3**					**N250TC**	5,860	7,400	1,650
37	23,400	0.9	47.3	**304L2**		**BE160M4**	**BX160MB4**			**N250TC**	5,750	7,260	1,610
38	22,400	1.1	46.6		**304R3**					**N250TC**	5,720	7,230	1,610
38	22,400	1.7	46.6		**305R3**					**N250TC**	5,720	7,230	1,610
38	23,000	2.5	46.5	**306L2**		**BE160M4**	**BX160MB4**	**ME5SA4**	**MX5SB4**	**N250TC**	7,860	9,910	2,340
38	22,200	2.9	46.3		**306R3**	**BE160M4**	**BX160MB4**			**N250TC**	7,850	9,890	2,340
40	22,000	1.4	44.6	**305L2**		**BE160M4**	**BX160MB4**			**N250TC**	5,650	7,140	1,580
41	20,900	1.3	43.6	**304L3**		**BE160M4**	**BX160MB4**			**N250TC**	5,610	7,090	1,570
42	20,500	1.4	42.6		**304R3**					**N250TC**	5,570	7,040	1,560
42	20,500	1.6	42.6		**305R3**					**N250TC**	5,570	7,040	1,560
45	18,800	3.0	39.2		**306R3**	**BE160M4**	**BX160MB4**			**N250TC**	7,470	9,410	2,210
46	19,000	1.0	38.4	**303L2**		**BE160M4**	**BX160MB4**			**N250TC**	5,400	6,820	1,500
46	19,000	1.3	38.4	**304L2**		**BE160M4**	**BX160MB4**			**N250TC**	5,400	6,820	1,500
46	19,000	2.0	38.4	**305L2**		**BE160M4**	**BX160MB4**			**N250TC**	5,400	6,820	1,500
48	17,900	1.2	37.1		**303R3**					**N250TC**	5,350	6,750	1,490
48	17,900	1.7	37.1		**304R3**					**N250TC**	5,350	6,750	1,490
48	17,900	2.1	37.1		**305R3**					**N250TC**	5,350	6,750	1,490
49	17,700	0.9	35.8	**303L2**		**BE160M4**	**BX160MB4**			**N250TC**	5,290	6,680	1,470
49	17,700	1.8	35.8	**305L2**		**BE160M4**	**BX160MB4**			**N250TC**	5,290	6,680	1,470
56	15,100	1.2	31.5		**303R3**					**N250TC**	5,090	6,430	1,410
56	15,100	1.8	31.5		**304R3**					**N250TC**	5,090	6,430	1,410
56	15,100	2.1	31.5		**305R3**					**N250TC**	5,090	6,430	1,410
58	14,600	0.9	30.4		**301R3**					**N250TC**	2,620	3,110	460
58	15,200	1.2	30.8	**303L2**		**BE160M4**	**BX160MB4**			**N250TC**	5,050	6,380	1,400
58	15,200	1.6	30.8	**304L2**		**BE160M4**	**BX160MB4**			**N250TC**	5,050	6,380	1,400
58	15,200	2.4	30.8	**305L2**		**BE160M4**	**BX160MB4**			**N250TC**	5,050	6,380	1,400
67	13,100	1.2	26.4	**303L2**		**BE160M4**	**BX160MB4**			**N250TC**	4,830	6,100	1,330
67	13,100	2.4	26.4	**305L2**		**BE160M4**	**BX160MB4**			**N250TC**	4,830	6,100	1,330
69	12,300	1.4	25.7		**303R3**					**N250TC**	4,790	6,050	1,320
69	12,300	2.1	25.7		**304R3**					**N250TC**	4,790	6,050	1,320
69	12,300	2.5	25.7		**305R3**					**N250TC**	4,790	6,050	1,320
71	11,900	1.0	24.8		**301R3**					**N250TC**	2,470	2,930	430
72	12,200	1.0	24.6	**301L2**						**N250TC**	2,460	2,920	430
72	12,100	1.5	24.5	**303L2**		**BE160M4**	**BX160MB4**			**N250TC**	4,720	5,960	1,300
72	12,100	2.2	24.5	**304L2**		**BE160M4**	**BX160MB4**			**N250TC**	4,720	5,960	1,300

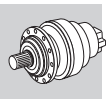

A

P_1 = 15 hp

n_2 rpm	T_2 lb•in	S	i			IE2	IE3	IE2	IE3	NEMA	Rn_2 [lbs] NHC/HC NPC/PC	HZ/PZ	FZ
72	12,100	2.7	24.5	**305L2**		**BE160M4**	**BX160MB4**			**N250TC**	4,720	5,960	1,300
78	11,200	1.6	22.7	**303L2**		**BE160M4**	**BX160MB4**			**N250TC**	4,620	5,830	1,260
78	11,200	2.2	22.7	**304L2**		**BE160M4**	**BX160MB4**			**N250TC**	4,620	5,830	1,260
78	11,200	3.0	22.7	**305L2**		**BE160M4**	**BX160MB4**			**N250TC**	4,620	5,830	1,260
85	10,300	1.5	20.8	**303L2**		**BE160M4**	**BX160MB4**			**N250TC**	4,490	5,670	1,230
85	10,300	2.5	20.8	**304L2**		**BE160M4**	**BX160MB4**			**N250TC**	4,490	5,670	1,230
85	10,300	2.7	20.8	**305L2**		**BE160M4**	**BX160MB4**			**N250TC**	4,490	5,670	1,230
88	9,950	1.1	20.1	**301L2**						**N250TC**	2,320	2,750	400
92	9,520	1.4	19.2		**303R2**					**N250TC**	4,390	5,540	1,190
92	9,520	2.6	19.2		**305R2**					**N250TC**	4,390	5,540	1,190
97	9,010	1.3	18.2	**301L2**						**N250TC**	2,250	2,670	390
98	8,950	1.9	18.1	**303L2**		**BE160M4**	**BX160MB4**			**N250TC**	4,310	5,450	1,170
98	8,950	2.8	18.1	**304L2**		**BE160M4**	**BX160MB4**			**N250TC**	4,310	5,450	1,170
105	8,350	2.5	16.8		**304R2**					**N250TC**	4,220	5,330	1,140
111	7,870	2.0	15.9		**303R2**					**N250TC**	4,140	5,240	1,120
115	7,580	1.9	15.3	**303L2**		**BE160M4**	**BX160MB4**			**N250TC**	4,100	5,180	1,110
119	7,350	1.5	14.8	**301L2**						**N250TC**	2,120	2,510	370
120	7,310	1.1	14.8		**301R2**					**N250TC**	2,110	2,510	360
130	6,770	2.5	13.7		**303R2**					**N250TC**	3,960	5,000	1,070
141	6,190	2.2	12.5	**303L2**		**BE160M4**	**BX160MB4**			**N250TC**	3,860	4,880	1,040
146	6,000	1.0	12.1	**300L2**						**N250TC**	1,990	2,510	340
146	6,000	1.7	12.1	**301L2**						**N250TC**	1,990	2,360	340
150	5,860	1.7	11.8		**301R2**					**N250TC**	1,980	2,350	340
163	5,400	3.0	10.9		**303R2**					**N250TC**	3,700	4,670	990
183	4,920	1.3	9.67	**303L1**		**BE160M4**	**BX160MB4**	**ME5SA4**	**MX5SB4**	**N250TC**	3,570	4,510	950
197	4,600	1.1	9.00	**301L1**						**N250TC**	1,820	2,160	310
203	4,330	1.2	8.74		**300R2**					**N250TC**	1,810	2,280	310
203	4,330	2.1	8.74		**301R2**					**N250TC**	1,810	2,140	310
236	3,820	2.7	7.50	**303L1**		**BE160M4**	**BX160MB4**	**ME5SA4**	**MX5SB4**	**N250TC**	3,310	4,180	870
246	3,680	0.9	7.20	**300L1**						**N250TC**	1,700	2,150	290
246	3,680	1.7	7.20	**301L1**						**N250TC**	1,700	2,020	290
248	3,540	1.4	7.13		**300R2**					**N250TC**	1,700	2,140	290
248	3,540	2.5	7.13		**301R2**					**N250TC**	1,700	2,020	290
307	2,950	1.4	5.77	**300L1**						**N250TC**	1,590	2,010	270
307	2,950	2.7	5.77	**301L1**						**N250TC**	1,590	1,890	270
415	2,180	1.9	4.26	**300L1**						**N250TC**	1,460	1,840	240
509	1,780	2.2	3.48	**300L1**						**N250TC**	1,370	1,730	230

P_1 = 20 hp

n_2 rpm	T_2 lb•in	S	i			IE2	IE3	IE2	IE3	NEMA	Rn_2 [lbs] NHC/HC NPC/PC	HZ/PZ	FZ
0.94	1,199,700	1.1	1893	**317ML4**		**BE160L4**	**BX160L4**	**ME5LA4**	**MX5LA4**	**N250TC**	89,800	95,400	33,700
1.1	984,400	1.1	1553	**316ML4**		**BE160L4**	**BX160L4**	**ME5LA4**	**MX5LA4**	**N250TC**	56,100	62,900	32,300
1.1	1,010,900	1.4	1595	**317ML4**		**BE160L4**	**BX160L4**	**ME5LA4**	**MX5LA4**	**N250TC**	87,600	93,100	32,600
1.3	835,600	1.7	1318	**317ML4**		**BE160L4**	**BX160L4**	**ME5LA4**	**MX5LA4**	**N250TC**	85,300	90,600	30,600
1.4	813,700	1.0	1284	**315ML4**		**BE160L4**	**BX160L4**	**ME5LA4**	**MX5LA4**	**N250TC**	35,000	42,800	18,200
1.4	784,400	1.3	1237	**316ML4**		**BE160L4**	**BX160L4**	**ME5LA4**	**MX5LA4**	**N250TC**	54,300	60,900	29,900
1.4	829,400	1.3	1308	**316ML4**		**BE160L4**	**BX160L4**	**ME5LA4**	**MX5LA4**	**N250TC**	54,700	61,400	30,500
1.6	700,000	1.1	1104	**315ML4**		**BE160L4**	**BX160L4**	**ME5LA4**	**MX5LA4**	**N250TC**	34,300	41,900	17,300
1.6	700,000	1.5	1104	**316ML4**		**BE160L4**	**BX160L4**	**ME5LA4**	**MX5LA4**	**N250TC**	53,400	59,900	28,800
1.6	718,800	1.9	1134	**317ML4**		**BE160L4**	**BX160L4**	**ME5LA4**	**MX5LA4**	**N250TC**	83,400	88,600	29,100
1.7	657,700	1.0	1038	**314ML4**		**BE160L4**	**BX160L4**	**ME5LA4**	**MX5LA4**	**N250TC**	34,000	41,500	16,900
1.7	660,900	1.3	1043	**315ML4**		**BE160L4**	**BX160L4**	**ME5LA4**	**MX5LA4**	**N250TC**	34,000	41,500	17,000
1.7	646,300	1.6	1020	**316ML4**		**BE160L4**	**BX160L4**	**ME5LA4**	**MX5LA4**	**N250TC**	52,800	59,300	28,100
1.7	654,400	2.3	1032	**317ML4**		**BE160L4**	**BX160L4**	**ME5LA4**	**MX5LA4**	**N250TC**	82,300	87,500	28,200
1.9	586,900	1.0	926	**314ML4**		**BE160L4**	**BX160L4**	**ME5LA4**	**MX5LA4**	**N250TC**	33,500	40,800	16,300

P_1 = 20 hp

n_2 rpm	T_2 lb•in	S	i			IE2	IE3	IE2	IE3	NEMA	Rn_2 [lbs] NHC/HC NPC/PC	HZ/PZ	FZ
1.9	589,800	1.3	930	**315ML4**		**BE160L4**	**BX160L4**	**ME5LA4**	**MX5LA4**	**N250TC**	33,500	40,900	16,300
1.9	576,400	1.1	909		**315MR4**	**BE160L4**	**BX160L4**	**ME5LA4**	**MX5LA4**	**N250TC**	33,400	40,700	16,200
1.9	604,300	2.0	953		**317MR4**	**BE160L4**	**BX160L4**	**ME5LA4**	**MX5LA4**	**N250TC**	81,400	86,500	27,400
2.0	557,800	1.8	880	**316ML4**		**BE160L4**	**BX160L4**	**ME5LA4**	**MX5LA4**	**N250TC**	51,700	58,000	26,700
2.0	572,800	2.4	904	**317ML4**		**BE160L4**	**BX160L4**	**ME5LA4**	**MX5LA4**	**N250TC**	80,800	85,800	27,000
2.1	543,700	1.2	858	**314ML4**		**BE160L4**	**BX160L4**	**ME5LA4**	**MX5LA4**	**N250TC**	33,100	40,400	15,900
2.1	546,400	1.6	862	**315ML4**		**BE160L4**	**BX160L4**	**ME5LA4**	**MX5LA4**	**N250TC**	33,100	40,400	15,900
2.2	509,200	2.7	803		**317MR4**	**BE160L4**	**BX160L4**	**ME5LA4**	**MX5LA4**	**N250TC**	79,400	84,400	25,900
2.3	495,800	1.5	782		**315MR4**	**BE160L4**	**BX160L4**	**ME5LA4**	**MX5LA4**	**N250TC**	32,700	39,900	15,400
2.3	497,000	2.0	784	**316ML4**		**BE160L4**	**BX160L4**	**ME5LA4**	**MX5LA4**	**N250TC**	50,900	57,100	25,700
2.3	495,800	2.0	782		**316MR4**	**BE160L4**	**BX160L4**	**ME5LA4**	**MX5LA4**	**N250TC**	50,900	57,100	25,700
2.4	467,700	1.4	738	**314ML4**		**BE160L4**	**BX160L4**	**ME5LA4**	**MX5LA4**	**N250TC**	32,400	39,500	15,100
2.4	470,000	1.8	741	**315ML4**		**BE160L4**	**BX160L4**	**ME5LA4**	**MX5LA4**	**N250TC**	32,400	39,600	15,100
2.5	440,600	1.0	695	**313ML4**		**BE160L4**	**BX160L4**			**N250TC**	32,900	41,200	13,200
2.5	447,800	2.2	706	**316ML4**		**BE160L4**	**BX160L4**	**ME5LA4**	**MX5LA4**	**N250TC**	50,100	56,200	24,800
2.6	423,700	1.6	668	**314ML4**		**BE160L4**	**BX160L4**	**ME5LA4**	**MX5LA4**	**N250TC**	31,900	39,000	14,600
2.6	425,800	2.0	672	**315ML4**		**BE160L4**	**BX160L4**	**ME5LA4**	**MX5LA4**	**N250TC**	32,000	39,000	14,600
2.7	409,900	1.0	647		**313MR4**	**BE160L4**	**BX160L4**			**N250TC**	32,600	40,800	12,900
2.7	417,800	1.8	659		**315MR4**	**BE160L4**	**BX160L4**	**ME5LA4**	**MX5LA4**	**N250TC**	31,900	38,900	14,600
2.7	417,800	2.3	659		**316MR4**	**BE160L4**	**BX160L4**	**ME5LA4**	**MX5LA4**	**N250TC**	49,600	55,700	24,300
2.8	397,300	0.9	627	**311ML4**		**BE160L4**	**BX160L4**			**N250TC**	23,400	24,400	10,300
2.8	401,200	1.1	633	**313ML4**		**BE160L4**	**BX160L4**			**N250TC**	32,500	40,600	12,800
2.8	395,100	2.1	623		**315MR4**	**BE160L4**	**BX160L4**	**ME5LA4**	**MX5LA4**	**N250TC**	31,600	38,600	14,300
2.8	398,100	2.4	628	**316ML4**		**BE160L4**	**BX160L4**	**ME5LA4**	**MX5LA4**	**N250TC**	49,300	55,300	23,900
2.8	395,100	2.5	623		**316MR4**	**BE160L4**	**BX160L4**	**ME5LA4**	**MX5LA4**	**N250TC**	49,200	55,200	23,800
2.8	396,800	2.7	626		**317MR4**	**BE160L4**	**BX160L4**	**ME5LA4**	**MX5LA4**	**N250TC**	76,700	81,400	23,800
2.9	389,000	1.2	614		**314MR4**	**BE160L4**	**BX160L4**			**N250TC**	31,500	38,500	14,200
3.0	372,700	1.7	588	**314ML4**		**BE160L4**	**BX160L4**	**ME5LA4**	**MX5LA4**	**N250TC**	31,300	38,300	14,000
3.0	374,500	2.2	591	**315ML4**		**BE160L4**	**BX160L4**	**ME5LA4**	**MX5LA4**	**N250TC**	31,400	38,300	14,000
3.1	359,800	1.0	568	**311ML4**		**BE160L4**	**BX160L4**			**N250TC**	23,000	24,000	10,000
3.1	357,400	1.3	564	**313ML4**		**BE160L4**	**BX160L4**			**N250TC**	31,900	40,000	12,300
3.1	364,400	1.6	575	**314ML4**		**BE160L4**	**BX160L4**	**ME5LA4**	**MX5LA4**	**N250TC**	31,200	38,100	13,900
3.1	356,800	2.8	563	**316ML4**		**BE160L4**	**BX160L4**	**ME5LA4**	**MX5LA4**	**N250TC**	48,500	54,400	23,000
3.3	338,800	1.2	535		**313MR4**	**BE160L4**	**BX160L4**			**N250TC**	31,700	39,700	12,100
3.3	338,100	2.5	533	**315ML4**		**BE160L4**	**BX160L4**	**ME5LA4**	**MX5LA4**	**N250TC**	30,900	37,700	13,600
3.4	329,400	1.1	520		**311MR4**	**BE160L4**	**BX160L4**			**N250TC**	22,800	23,700	9,710
3.4	325,600	1.3	514	**313ML4**		**BE160L4**	**BX160L4**			**N250TC**	31,500	39,500	11,900
3.4	334,700	1.7	528		**314MR4**	**BE160L4**	**BX160L4**			**N250TC**	30,900	37,700	13,500
3.4	332,900	2.5	525		**315MR4**	**BE160L4**	**BX160L4**	**ME5LA4**	**MX5LA4**	**N250TC**	30,800	37,700	13,500
3.5	324,600	1.3	512	**311ML4**		**BE160L4**	**BX160L4**			**N250TC**	22,700	23,700	9,660
3.6	310,500	0.9	490		**311MR4**	**BE160L4**	**BX160L4**			**N250TC**	22,600	23,500	9,520
3.6	314,500	1.4	496		**313MR4**	**BE160L4**	**BX160L4**			**N250TC**	31,400	39,300	11,800
3.6	313,500	2.1	495	**314ML4**		**BE160L4**	**BX160L4**	**ME5LA4**	**MX5LA4**	**N250TC**	30,600	37,300	13,200
3.6	308,600	2.7	487	**315ML4**		**BE160L4**	**BX160L4**	**ME5LA4**	**MX5LA4**	**N250TC**	30,500	37,200	13,200
3.9	286,300	1.7	452	**313ML4**		**BE160L4**	**BX160L4**			**N250TC**	30,900	38,700	11,400
3.9	285,500	1.4	450		**313MR4**	**BE160L4**	**BX160L4**			**N250TC**	30,900	38,700	11,400
3.9	290,400	2.3	458	**314ML4**		**BE160L4**	**BX160L4**	**ME5LA4**	**MX5LA4**	**N250TC**	30,300	36,900	12,900
4.0	269,600	1.2	438		**311MR4**	**BE160L4**	**BX160L4**			**N250TC**	22,200	23,200	9,170
4.0	282,000	1.8	445		**314MR4**	**BE160L4**	**BX160L4**			**N250TC**	30,100	36,800	12,800
4.0	279,500	3.0	441	**315ML4**		**BE160L4**	**BX160L4**	**ME5LA4**	**MX5LA4**	**N250TC**	30,100	36,700	12,700
4.2	266,700	2.2	421		**314MR4**	**BE160L4**	**BX160L4**			**N250TC**	29,900	36,500	12,500
4.3	260,100	1.6	410	**311ML4**		**BE160L4**	**BX160L4**			**N250TC**	22,000	23,000	8,980
4.3	253,600	1.3	413		**311MR4**	**BE160L4**	**BX160L4**			**N250TC**	22,000	23,000	8,990
4.5	249,800	2.0	394	**313ML4**		**BE160L4**	**BX160L4**			**N250TC**	30,300	38,000	10,900
4.5	249,800	2.6	394	**314ML4**		**BE160L4**	**BX160L4**	**ME5LA4**	**MX5LA4**	**N250TC**	29,600	36,100	12,300
4.6	237,600	1.6	387		**313MR4**	**BE160L4**	**BX160L4**			**N250TC**	30,300	37,900	10,800
5.0	224,700	2.2	354		**314MR4**	**BE160L4**	**BX160L4**			**N250TC**	29,200	35,600	11,800

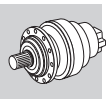

A

P_1 = 20 hp

n_2 rpm	T_2 lb•in	S	i			IE2	IE3	IE2	IE3	NEMA	Rn_2 [lbs] NHC/HC NPC/PC	HZ/PZ	FZ
5.1	219,700	1.2	347		**310MR4**	**BE160L4**	**BX160L4**			**N250TC**	17,200	22,200	8,490
5.1	220,300	1.8	348	**311ML4**		**BE160L4**	**BX160L4**			**N250TC**	21,500	22,500	8,490
5.1	219,000	2.2	346		**313MR4**	**BE160L4**	**BX160L4**			**N250TC**	29,900	37,400	10,400
5.2	216,300	1.5	341		**311MR4**	**BE160L4**	**BX160L4**			**N250TC**	21,500	22,500	8,440
5.7	195,700	1.9	309		**313MR4**	**BE160L4**	**BX160L4**			**N250TC**	29,900	37,400	10,000
5.8	193,300	1.0	305		**310MR4**	**BE160L4**	**BX160L4**			**N250TC**	17,200	22,200	8,130
5.8	198,500	1.3	304	**313ML3**		**BE160L4**	**BX160L4**	**ME5LA4**	**MX5LA4**	**N250TC**	29,900	37,400	9,990
6.0	193,000	1.0	295	**310ML3**		**BE160L4**	**BX160L4**	**ME5LA4**	**MX5LA4**	**N250TC**	17,200	22,200	8,040
6.0	186,100	1.7	294		**311MR4**	**BE160L4**	**BX160L4**			**N250TC**	21,500	22,500	8,030
6.1	190,300	1.3	291	**311ML3**		**BE160L4**	**BX160L4**	**ME5LA4**	**MX5LA4**	**N250TC**	21,500	22,500	8,010
6.3	178,200	2.2	281		**313MR4**	**BE160L4**	**BX160L4**			**N250TC**	29,900	37,400	9,740
6.4	175,100	1.4	276		**310MR4**	**BE160L4**	**BX160L4**			**N250TC**	17,200	22,200	7,870
6.4	175,100	2.2	276		**314MR4**	**BE160L4**	**BX160L4**			**N250TC**	29,200	35,600	10,900
6.7	168,500	2.2	266		**311MR4**	**BE160L4**	**BX160L4**			**N250TC**	21,500	22,500	7,770
6.9	163,600	0.9	258		**309R4**	**BE160L4**	**BX160L4**			**N250TC**	14,700	20,000	4,260
6.9	163,700	1.2	258		**310MR4**	**BE160L4**	**BX160L4**			**N250TC**	17,200	22,200	7,690
7.0	164,900	2.3	252	**313ML3**		**BE160L4**	**BX160L4**	**ME5LA4**	**MX5LA4**	**N250TC**	29,900	37,400	9,400
7.1	162,900	1.0	249	**310ML3**		**BE160L4**	**BX160L4**	**ME5LA4**	**MX5LA4**	**N250TC**	17,200	22,200	7,600
7.2	160,300	2.0	237	**311ML3**		**BE160L4**	**BX160L4**	**ME5LA4**	**MX5LA4**	**N250TC**	21,500	22,500	7,560
7.4	150,600	1.6	238		**310MR4**	**BE160L4**	**BX160L4**			**N250TC**	17,200	22,200	7,480
7.4	156,500	2.7	240	**314ML3**		**BE160L4**	**BX160L4**				29,200	35,600	10,400
7.4	150,600	2.2	238		**314MR4**	**BE160L4**	**BX160L4**			**N250TC**	29,200	35,600	10,400
7.5	150,200	2.2	237		**313MR4**	**BE160L4**	**BX160L4**			**N250TC**	29,900	37,400	9,200
7.6	147,200	1.0	232		**309R4**	**BE160L4**	**BX160L4**			**N250TC**	14,700	20,000	4,110
7.7	150,400	1.1	230	**310ML3**		**BE160L4**	**BX160L4**	**ME5LA4**	**MX5LA4**	**N250TC**	17,200	22,200	7,400
7.7	145,000	2.2	229		**311MR4**	**BE160L4**	**BX160L4**			**N250TC**	21,500	22,500	7,390
8.5	136,300	2.7	209	**313ML3**		**BE160L4**	**BX160L4**	**ME5LA4**	**MX5LA4**	**N250TC**	29,900	37,400	8,820
8.6	130,300	0.9	206		**307R4**	**BE160L4**	**BX160L4**			**N250TC**	14,700	20,000	4,940
8.6	130,300	1.3	206		**309R4**	**BE160L4**	**BX160L4**			**N250TC**	14,700	20,000	3,950
8.6	130,500	1.5	206		**310MR4**	**BE160L4**	**BX160L4**			**N250TC**	17,200	22,200	7,130
8.7	132,500	2.4	203	**311ML3**		**BE160L4**	**BX160L4**	**ME5LA4**	**MX5LA4**	**N250TC**	21,500	22,500	7,100
8.8	131,700	1.1	202	**309L3**		**BE160L4**	**BX160L4**			**N250TC**	14,700	20,000	3,920
8.8	131,900	1.5	202	**310ML3**		**BE160L4**	**BX160L4**	**ME5LA4**	**MX5LA4**	**N250TC**	17,200	22,200	7,090
8.8	127,200	2.2	201		**313MR4**	**BE160L4**	**BX160L4**			**N250TC**	29,900	37,400	8,700
8.9	125,600	2.2	198		**311MR4**	**BE160L4**	**BX160L4**			**N250TC**	21,500	22,500	7,040
9.3	120,900	1.0	191		**307R4**	**BE160L4**	**BX160L4**			**N250TC**	14,700	20,000	4,810
9.3	120,900	1.3	191		**309R4**	**BE160L4**	**BX160L4**			**N250TC**	14,700	20,000	3,850
9.3	120,000	2.0	189		**310MR4**	**BE160L4**	**BX160L4**			**N250TC**	17,200	22,200	6,940
9.3	124,900	2.3	191	**311ML3**		**BE160L4**	**BX160L4**	**ME5LA4**	**MX5LA4**	**N250TC**	21,500	22,500	6,960
9.3	120,000	2.2	189		**314MR4**	**BE160L4**	**BX160L4**			**N250TC**	29,200	35,600	9,600
9.6	117,000	2.2	185		**313MR4**	**BE160L4**	**BX160L4**			**N250TC**	29,900	37,400	8,470
9.7	119,300	1.1	183	**309L3**		**BE160L4**	**BX160L4**			**N250TC**	14,700	20,000	3,800
9.7	115,500	2.2	182		**311MR4**	**BE160L4**	**BX160L4**			**N250TC**	21,500	22,500	6,850
9.7	118,900	2.2	182	**313ML3**		**BE160L4**	**BX160L4**	**ME5LA4**	**MX5LA4**	**N250TC**	29,900	37,400	8,430
10.0	115,700	0.9	177	**307L3**		**BE160L4**	**BX160L4**			**N250TC**	14,700	20,000	4,700
10.0	115,800	1.4	177	**310ML3**		**BE160L4**	**BX160L4**	**ME5LA4**	**MX5LA4**	**N250TC**	17,200	22,200	6,790
10.4	111,700	2.8	171	**311ML3**		**BE160L4**	**BX160L4**	**ME5LA4**	**MX5LA4**	**N250TC**	21,300	22,500	6,700
10.7	104,700	0.9	165		**307R4**	**BE160L4**	**BX160L4**			**N250TC**	14,400	19,600	4,590
10.7	104,700	1.4	165		**309R4**	**BE160L4**	**BX160L4**			**N250TC**	14,400	19,600	3,670
10.8	106,900	2.1	164	**310ML3**		**BE160L4**	**BX160L4**	**ME5LA4**	**MX5LA4**	**N250TC**	16,800	21,700	6,610
11.0	105,600	1.3	162	**309L3**		**BE160L4**	**BX160L4**			**N250TC**	14,300	19,400	3,640
11.0	101,700	2.2	160		**310MR4**	**BE160L4**	**BX160L4**			**N250TC**	16,700	21,600	6,560
11.0	105,300	2.9	161	**311ML3**		**BE160L4**	**BX160L4**	**ME5LA4**	**MX5LA4**	**N250TC**	20,900	22,500	6,570
11.0	101,700	2.2	160		**314MR4**	**BE160L4**	**BX160L4**			**N250TC**	28,300	34,600	9,090
11.5	97,900	2.2	154		**311MR4**	**BE160L4**	**BX160L4**			**N250TC**	20,700	22,500	6,480
11.6	96,300	1.2	152		**307R4**	**BE160L4**	**BX160L4**			**N250TC**	14,000	19,100	4,460
11.6	96,300	1.6	152		**309R4**	**BE160L4**	**BX160L4**			**N250TC**	14,000	19,100	3,570

Bonfiglioli Riduttori

P_1 = 20 hp

n_2 rpm	T_2 lb•in	S	i			IE2	IE3	IE2	IE3	NEMA	Rn_2 [lbs] NHC/HC NPC/PC	HZ/PZ	FZ
11.6	100,000	2.7	153		**313MR3**	**BE160L4**	**BX160L4**	**ME5LA4**	**MX5LA4**	**N250TC**	28,600	35,800	7,950
11.9	97,600	2.0	149	**310ML3**		**BE160L4**	**BX160L4**	**ME5LA4**	**MX5LA4**	**N250TC**	16,400	21,100	6,410
12.1	95,600	1.2	146	**307L3**		**BE160L4**	**BX160L4**			**N250TC**	13,900	18,900	4,410
12.1	95,800	2.5	147		**311MR3**	**BE160L4**	**BX160L4**	**ME5LA4**	**MX5LA4**	**N250TC**	20,400	22,500	6,370
12.8	90,700	1.0	139	**307L3**		**BE160L4**	**BX160L4**			**N250TC**	13,600	18,600	4,330
12.8	90,700	1.5	139	**309L3**		**BE160L4**	**BX160L4**			**N250TC**	13,600	18,600	3,460
13.0	86,100	2.2	136		**310MR4**	**BE160L4**	**BX160L4**			**N250TC**	15,900	20,500	6,210
13.1	88,400	2.5	135	**310ML3**		**BE160L4**	**BX160L4**	**ME5LA4**	**MX5LA4**	**N250TC**	15,900	20,500	6,200
14.1	82,300	1.4	126	**307L3**		**BE160L4**	**BX160L4**			**N250TC**	13,300	18,000	4,190
14.1	82,300	1.7	126	**309L3**		**BE160L4**	**BX160L4**			**N250TC**	13,300	18,000	3,350
14.8	78,300	1.0	120		**307R3**	**BE160L4**	**BX160L4**			**N250TC**	13,100	17,800	4,120
14.8	78,300	1.5	120		**309R3**	**BE160L4**	**BX160L4**			**N250TC**	13,100	17,800	3,300
14.8	78,300	1.9	120		**310MR3**	**BE160L4**	**BX160L4**			**N250TC**	15,300	19,800	5,950
14.9	77,800	2.4	119	**310ML3**		**BE160L4**	**BX160L4**	**ME5LA4**	**MX5LA4**	**N250TC**	15,300	19,700	5,940
15.6	74,000	1.2	113	**307L3**		**BE160L4**	**BX160L4**			**N250TC**	12,800	17,500	4,050
15.6	74,000	1.8	113	**309L3**		**BE160L4**	**BX160L4**			**N250TC**	12,800	17,500	3,240
16.4	70,400	2.9	108	**310ML3**		**BE160L4**	**BX160L4**	**ME5LA4**	**MX5LA4**	**N250TC**	14,800	19,200	5,750
17.0	68,100	1.1	104	**306L3**		**BE160L4**	**BX160L4**			**N250TC**	10,000	12,600	3,060
17.6	65,500	1.6	100	**307L3**		**BE160L4**	**BX160L4**			**N250TC**	12,400	16,800	3,890
17.6	65,500	2.1	100	**309L3**		**BE160L4**	**BX160L4**			**N250TC**	12,400	16,800	3,110
17.6	65,900	2.7	101	**310ML3**		**BE160L4**	**BX160L4**	**ME5LA4**	**MX5LA4**	**N250TC**	14,500	18,800	5,620
17.9	64,700	1.2	99.0		**307R3**	**BE160L4**	**BX160L4**			**N250TC**	12,300	16,800	3,870
17.9	64,700	1.7	99.0		**309R3**	**BE160L4**	**BX160L4**			**N250TC**	12,300	16,800	3,090
17.9	64,700	2.1	99.0		**310MR3**	**BE160L4**	**BX160L4**			**N250TC**	14,500	18,700	5,590
19.0	60,800	1.7	93.0	**307L3**		**BE160L4**	**BX160L4**			**N250TC**	12,100	16,500	3,790
19.0	60,800	2.1	93.0	**309L3**		**BE160L4**	**BX160L4**			**N250TC**	12,100	16,500	3,030
20.1	57,700	1.3	88.3	**306L3**		**BE160L4**	**BX160L4**			**N250TC**	9,520	12,000	2,900
20.9	55,400	1.2	84.7		**306R3**	**BE160L4**	**BX160L4**			**N250TC**	9,410	11,900	2,860
21.2	54,500	1.6	83.4		**307R3**	**BE160L4**	**BX160L4**			**N250TC**	11,700	15,900	3,650
21.2	54,500	2.2	83.4		**309R3**	**BE160L4**	**BX160L4**			**N250TC**	11,700	15,900	2,920
21.2	54,500	2.2	83.4		**310MR3**	**BE160L4**	**BX160L4**			**N250TC**	13,700	17,700	5,280
21.6	53,500	1.1	81.9	**306L3**		**BE160L4**	**BX160L4**			**N250TC**	9,310	11,700	2,820
22.0	52,700	1.7	80.6	**307L3**		**BE160L4**	**BX160L4**			**N250TC**	11,600	15,800	3,610
22.0	52,700	2.4	80.6	**309L3**		**BE160L4**	**BX160L4**			**N250TC**	11,600	15,800	2,890
22.5	51,400	1.9	78.6		**307R3**	**BE160L4**	**BX160L4**			**N250TC**	11,500	15,600	3,580
22.5	51,400	2.2	78.6		**310MR3**	**BE160L4**	**BX160L4**			**N250TC**	13,500	17,400	5,180
23.0	50,300	1.4	77.0	**306L3**		**BE160L4**	**BX160L4**			**N250TC**	9,140	11,500	2,770
23.9	48,400	2.0	74.1	**307L3**		**BE160L4**	**BX160L4**			**N250TC**	11,300	15,400	3,510
23.9	48,400	2.6	74.1	**309L3**		**BE160L4**	**BX160L4**			**N250TC**	11,300	15,400	2,810
24.3	47,600	1.4	72.9		**306R3**	**BE160L4**	**BX160L4**			**N250TC**	8,990	11,300	2,720
24.4	48,800	0.9	72.5	**306L2**		**BE160L4**	**BX160L4**	**ME5LA4**	**MX5LA4**	**N250TC**	8,980	11,300	2,710
24.7	46,900	1.9	71.8		**307R3**	**BE160L4**	**BX160L4**			**N250TC**	11,200	15,200	3,480
24.7	46,900	2.3	71.8		**309R3**	**BE160L4**	**BX160L4**			**N250TC**	11,200	15,200	2,780
24.7	46,900	2.2	71.8		**310MR3**	**BE160L4**	**BX160L4**			**N250TC**	13,100	17,000	5,020
26.2	44,100	1.4	67.5		**306R3**	**BE160L4**	**BX160L4**			**N250TC**	8,790	11,100	2,650
27.1	42,600	1.5	65.2	**306L3**		**BE160L4**	**BX160L4**			**N250TC**	8,700	11,000	2,620
27.2	42,500	2.2	65.0		**307R3**	**BE160L4**	**BX160L4**			**N250TC**	10,900	14,800	3,360
27.2	42,500	2.2	65.0		**309R3**	**BE160L4**	**BX160L4**			**N250TC**	10,900	14,800	2,690
27.2	42,500	2.2	65.0		**310MR3**	**BE160L4**	**BX160L4**			**N250TC**	12,800	16,500	4,860
28.1	41,200	1.0	63.1	**305L3**		**BE160L4**	**BX160L4**			**N250TC**	6,270	7,920	1,780
28.1	41,200	0.9	63.1		**305R3**					**N250TC**	6,270	7,920	1,780
29.3	39,500	2.4	60.5	**307L3**		**BE160L4**	**BX160L4**			**N250TC**	10,600	14,500	3,280
30	38,000	1.7	58.1		**306R3**	**BE160L4**	**BX160L4**			**N250TC**	8,400	10,600	2,520
31	37,900	1.2	56.3	**306L2**		**BE160L4**	**BX160L4**	**ME5LA4**	**MX5LA4**	**N250TC**	8,320	10,500	2,490
32	36,500	2.3	55.9		**307R3**	**BE160L4**	**BX160L4**			**N250TC**	10,400	14,100	3,200
32	36,500	2.3	55.9		**309R3**	**BE160L4**	**BX160L4**			**N250TC**	10,400	14,100	2,560
32	36,500	2.2	55.9		**310MR3**	**BE160L4**	**BX160L4**			**N250TC**	12,200	15,700	4,620

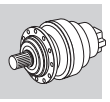

A

P_1 = 20 hp

n_2 rpm	T_2 lb•in	S	i			IE2	IE3	IE2	IE3	NEMA	Rn_2 [lbs] NHC/HC NPC/PC	HZ/PZ	FZ
33	34,900	1.0	53.4	**305L3**		**BE160L4**	**BX160L4**			**N250TC**	5,960	7,530	1,680
33	34,800	1.7	53.2	**306L3**		**BE160L4**	**BX160L4**			**N250TC**	8,180	10,300	2,450
35	32,900	0.9	50.3		**304R3**					**N250TC**	5,860	7,400	1,650
35	32,900	1.2	50.3		**305R3**					**N250TC**	5,860	7,400	1,650
35	33,500	2.7	51.3	**307L3**		**BE160L4**	**BX160L4**			**N250TC**	10,100	13,800	3,110
38	30,500	1.2	46.6		**305R3**					**N250TC**	5,720	7,230	1,610
38	31,300	1.8	46.5	**306L2**		**BE160L4**	**BX160L4**	**ME5LA4**	**MX5LA4**	**N250TC**	7,860	9,910	2,340
38	30,200	2.1	46.3		**306R3**	**BE160L4**	**BX160L4**			**N250TC**	7,850	9,890	2,340
38	31,500	2.3	46.7	**307L2**		**BE160L4**	**BX160L4**	**ME5LA4**	**MX5LA4**	**N250TC**	9,850	13,400	3,010
40	30,100	1.0	44.6	**305L2**		**BE160L4**	**BX160L4**			**N250TC**	5,650	7,140	1,580
40	29,100	2.3	44.6		**307R3**	**BE160L4**	**BX160L4**			**N250TC**	9,710	13,200	2,960
40	29,100	2.3	44.6		**309R3**	**BE160L4**	**BX160L4**			**N250TC**	9,710	13,200	2,370
40	29,100	2.2	44.6		**310MR3**	**BE160L4**	**BX160L4**			**N250TC**	11,400	14,700	4,280
41	28,500	1.0	43.6	**304L3**		**BE160L4**	**BX160L4**			**N250TC**	5,610	7,090	1,570
42	27,800	1.0	42.6		**304R3**					**N250TC**	5,570	7,040	1,560
42	27,800	1.2	42.6		**305R3**					**N250TC**	5,570	7,040	1,560
45	25,600	2.2	39.2		**306R3**	**BE160L4**	**BX160L4**			**N250TC**	7,470	9,410	2,210
46	25,900	1.0	38.4	**304L2**		**BE160L4**	**BX160L4**			**N250TC**	5,400	6,820	1,500
46	25,900	1.5	38.4	**305L2**		**BE160L4**	**BX160L4**			**N250TC**	5,400	6,820	1,500
46	25,900	2.2	38.4	**306L2**		**BE160L4**	**BX160L4**	**ME5LA4**	**MX5LA4**	**N250TC**	7,429	9,360	2,200
46	26,000	2.8	38.6	**307L2**		**BE160L4**	**BX160L4**	**ME5LA4**	**MX5LA4**	**N250TC**	9,300	12,600	2,830
47	24,700	2.3	37.7		**307R3**	**BE160L4**	**BX160L4**			**N250TC**	9,230	12,600	2,810
47	24,700	2.3	37.7		**309R3**	**BE160L4**	**BX160L4**			**N250TC**	9,230	12,600	2,240
47	24,700	2.2	37.7		**310MR3**	**BE160L4**	**BX160L4**			**N250TC**	10,800	14,000	4,050
48	24,300	1.3	37.1		**304R3**					**N250TC**	5,350	6,750	1,490
48	24,300	1.5	37.1		**305R3**					**N250TC**	5,350	6,750	1,490
49	24,100	1.3	35.8	**305L2**		**BE160L4**	**BX160L4**			**N250TC**	5,290	6,680	1,470
53	21,700	2.3	33.2		**306R3**	**BE160L4**	**BX160L4**			**N250TC**	7,100	8,950	2,090
54	22,300	2.7	33.1	**306L2**		**BE160L4**	**BX160L4**	**ME5LA4**	**MX5LA4**	**N250TC**	7,090	8,940	2,090
56	20,600	1.3	31.5		**304R3**					**N250TC**	5,090	6,430	1,410
56	20,600	1.6	31.5		**305R3**					**N250TC**	5,090	6,430	1,410
56	20,700	2.3	31.6		**307R3**	**BE160L4**	**BX160L4**			**N250TC**	8,760	11,900	2,640
56	20,700	2.3	31.6		**309R3**	**BE160L4**	**BX160L4**			**N250TC**	8,760	11,900	2,120
58	20,700	0.9	30.8	**303L2**		**BE160L4**	**BX160L4**			**N250TC**	5,050	6,380	1,400
58	20,700	1.2	30.8	**304L2**		**BE160L4**	**BX160L4**			**N250TC**	5,050	6,380	1,400
58	20,700	1.8	30.8	**305L2**		**BE160L4**	**BX160L4**			**N250TC**	5,050	6,380	1,400
62	19,200	2.9	28.4	**306L2**		**BE160L4**	**BX160L4**	**ME5LA4**	**MX5LA4**	**N250TC**	6,780	8,550	1,990
67	17,800	0.9	26.4	**303L2**		**BE160L4**	**BX160L4**			**N250TC**	4,830	6,100	1,330
67	17,800	1.7	26.4	**305L2**		**BE160L4**	**BX160L4**			**N250TC**	4,830	6,100	1,330
69	16,800	1.0	25.7		**303R3**					**N250TC**	4,790	6,050	1,320
69	16,800	1.6	25.7		**304R3**					**N250TC**	4,790	6,050	1,320
69	16,800	1.8	25.7		**305R3**					**N250TC**	4,790	6,050	1,320
72	16,500	1.1	24.5	**303L2**		**BE160L4**	**BX160L4**			**N250TC**	4,720	5,960	1,300
72	16,500	1.6	24.5	**304L2**		**BE160L4**	**BX160L4**			**N250TC**	4,720	5,960	1,300
72	16,500	2.0	24.5	**305L2**		**BE160L4**	**BX160L4**			**N250TC**	4,720	5,960	1,300
78	15,300	1.2	22.7	**303L2**		**BE160L4**	**BX160L4**			**N250TC**	4,620	5,830	1,260
78	15,300	1.6	22.7	**304L2**		**BE160L4**	**BX160L4**			**N250TC**	4,620	5,830	1,260
78	15,300	2.2	22.7	**305L2**		**BE160L4**	**BX160L4**			**N250TC**	4,620	5,830	1,260
85	14,000	1.1	20.8	**303L2**		**BE160L4**	**BX160L4**			**N250TC**	4,490	5,670	1,230
85	14,000	1.8	20.8	**304L2**		**BE160L4**	**BX160L4**			**N250TC**	4,490	5,670	1,230
85	14,000	2.0	20.8	**305L2**		**BE160L4**	**BX160L4**			**N250TC**	4,490	5,670	1,230
92	13,000	1.0	19.2		**303R2**					**N250TC**	4,390	5,540	1,190
92	13,000	1.9	19.2		**305R2**					**N250TC**	4,390	5,540	1,190
92	12,900	2.3	19.2		**306R2**	**BE160L4**	**BX160L4**			**N250TC**	6,030	7,600	1,740
97	12,200	0.9	18.2	**301L2**						**N250TC**	2,250	2,670	390
98	12,200	1.4	18.1	**303L2**		**BE160L4**	**BX160L4**			**N250TC**	4,310	5,450	1,170
98	12,200	2.0	18.1	**304L2**		**BE160L4**	**BX160L4**			**N250TC**	4,310	5,450	1,170

Bonfiglioli Riduttori

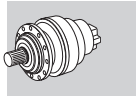

A

P_1 = 20 hp

n_2 rpm	T_2 lb•in	S	i			IE2	IE3	IE2	IE3	NEMA	Rn_2 [lbs] NHC/HC NPC/PC	HZ/PZ	FZ
98	12,200	2.5	18.1	**305L2**		**BE160L4**	**BX160L4**			**N250TC**	4,310	5,450	1,170
105	11,300	1.8	16.8		**304R2**					**N250TC**	4,220	5,330	1,140
111	10,700	1.5	15.9		**303R2**					**N250TC**	4,140	5,240	1,120
111	10,700	2.3	15.9		**305R2**					**N250TC**	4,140	5,240	1,120
111	10,700	2.3	15.9		**306R2**	**BE160L4**	**BX160L4**			**N250TC**	5,690	7,180	1,640
115	10,300	1.4	15.3	**303L2**		**BE160L4**	**BX160L4**			**N250TC**	4,100	5,180	1,110
115	10,300	2.3	15.3	**304L2**		**BE160L4**	**BX160L4**			**N250TC**	4,100	5,180	1,110
115	10,300	2.5	15.3	**305L2**		**BE160L4**	**BX160L4**			**N250TC**	4,100	5,180	1,110
119	10,000	1.1	14.8	**301L2**						**N250TC**	2,120	2,510	370
130	9,210	1.8	13.7		**303R2**					**N250TC**	3,960	5,000	1,070
130	9,210	2.3	13.7		**304R2**					**N250TC**	3,960	5,000	1,070
130	9,210	2.3	13.7		**305R2**					**N250TC**	3,960	5,000	1,070
130	9,210	2.3	13.7		**306R2**	**BE160L4**	**BX160L4**			**N250TC**	5,440	6,860	1,560
141	8,440	1.6	12.5	**303L2**		**BE160L4**	**BX160L4**			**N250TC**	3,860	4,880	1,040
141	8,440	2.7	12.5	**304L2**		**BE160L4**	**BX160L4**			**N250TC**	3,860	4,880	1,040
141	8,440	2.9	12.5	**305L2**		**BE160L4**	**BX160L4**			**N250TC**	3,860	4,880	1,040
146	8,160	1.3	12.1	**301L2**						**N250TC**	1,990	2,360	340
150	7,970	1.2	11.8		**301R2**					**N250TC**	1,980	2,350	340
163	7,340	2.2	10.9		**303R2**					**N250TC**	3,700	4,670	990
163	7,340	2.3	10.9		**304R2**					**N250TC**	3,700	4,670	990
163	7,340	2.3	10.9		**305R2**					**N250TC**	3,700	4,670	990
163	7,340	2.3	10.9		**306R2**	**BE160L4**	**BX160L4**			**N250TC**	5,080	6,410	1,440
183	6,710	0.9	9.67	**303L1**		**BE160L4**	**BX160L4**	**ME5LA4**	**MX5LA4**	**N250TC**	3,570	4,510	950
192	6,220	2.3	9.23		**303R2**					**N250TC**	3,520	4,450	940
192	6,220	2.3	9.23		**304R2**					**N250TC**	3,520	4,450	940
192	6,220	2.3	9.23		**305R2**					**N250TC**	3,520	4,450	940
192	6,210	2.3	9.23		**306R2**	**BE160L4**	**BX160L4**			**N250TC**	4,840	6,100	1,360
203	5,890	1.6	8.74		**301R2**					**N250TC**	1,810	2,140	310
236	5,210	2.0	7.50	**303L1**		**BE160L4**	**BX160L4**	**ME5LA4**	**MX5LA4**	**N250TC**	3,310	4,180	870
246	5,000	1.3	7.20	**301L1**						**N250TC**	1,700	2,020	290
248	4,810	1.0	7.13		**300R2**					**N250TC**	1,700	2,140	290
248	4,810	1.8	7.13		**301R2**					**N250TC**	1,700	2,020	290
285	4,310	2.7	6.20	**303L1**		**BE160L4**	**BX160L4**	**ME5LA4**	**MX5LA4**	**N250TC**	3,130	3,950	820
307	4,010	1.0	5.77	**300L1**						**N250TC**	1,590	2,010	270
307	4,010	2.0	5.77	**301L1**						**N250TC**	1,590	1,890	270
415	2,960	1.4	4.26	**300L1**						**N250TC**	1,460	1,840	240
415	2,960	2.5	4.26	**301L1**						**N250TC**	1,460	1,730	240
509	2,429	1.6	3.48	**300L1**						**N250TC**	1,370	1,730	230
509	2,429	2.9	3.48	**301L1**						**N250TC**	1,370	1,630	230

P_1 = 25 hp

n_2 rpm	T_2 lb•in	S	i			IE2	IE3	IE2	IE3	NEMA	Rn_2 [lbs] NHC/HC NPC/PC	HZ/PZ	FZ
0.94	1,471,100	0.9	1893	**317ML4**		**BE180M4**	**BX180M4**			**N280TC**	89,700	95,300	33,700
1.1	1,239,500	1.1	1595	**317ML4**		**BE180M4**	**BX180M4**			**N280TC**	87,500	93,000	32,500
1.3	1,079,400	2.7	1389	**319L4**		**BE180M4**	**BX180M4**				99,200	109,200	41,400
1.4	961,900	1.1	1237	**316ML4**		**BE180M4**	**BX180M4**			**N280TC**	54,300	60,900	29,900
1.4	1,017,000	1.0	1308	**316ML4**		**BE180M4**	**BX180M4**			**N280TC**	54,700	61,400	30,400
1.4	1,024,700	1.3	1318	**317ML4**		**BE180M4**	**BX180M4**			**N280TC**	85,200	90,500	30,500
1.6	858,300	0.9	1104	**315ML4**		**BE180M4**	**BX180M4**			**N280TC**	34,300	41,800	17,300
1.6	858,300	1.2	1104	**316ML4**		**BE180M4**	**BX180M4**			**N280TC**	53,400	59,900	28,800
1.6	881,400	1.6	1134	**317ML4**		**BE180M4**	**BX180M4**			**N280TC**	83,400	88,600	29,000
1.7	810,500	1.1	1043	**315ML4**		**BE180M4**	**BX180M4**			**N280TC**	34,000	41,500	16,900

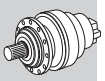

A

P_1 = 25 hp

n_2 rpm	T_2 lb•in	S	i			IE2	IE3	IE2	IE3	NEMA	Rn_2 [lbs] NHC/HC NPC/PC	HZ/PZ	FZ
1.7	792,500	1.3	1020	**316ML4**		**BE180M4**	**BX180M4**			**N280TC**	52,800	59,200	28,000
1.7	802,400	1.9	1032	**317ML4**		**BE180M4**	**BX180M4**			**N280TC**	82,300	87,400	28,100
1.7	823,200	2.8	1059	**318ML4**		**BE180M4**	**BX180M4**				84,200	88,700	37,800
1.9	723,200	1.1	930	**315ML4**		**BE180M4**	**BX180M4**			**N280TC**	33,400	40,800	16,300
1.9	741,000	1.6	953		**317MR4**	**BE180M4**	**BX180M4**			**N280TC**	81,300	86,400	27,400
2.0	684,000	1.5	880	**316ML4**		**BE180M4**	**BX180M4**			**N280TC**	51,700	58,000	26,700
2.0	702,400	2.0	904	**317ML4**		**BE180M4**	**BX180M4**			**N280TC**	80,700	85,700	26,900
2.1	666,700	1.0	858	**314ML4**		**BE180M4**	**BX180M4**			**N280TC**	33,100	40,400	15,900
2.1	670,000	1.3	862	**315ML4**		**BE180M4**	**BX180M4**			**N280TC**	33,100	40,400	15,900
2.2	615,600	2.8	792	**317ML4**		**BE180M4**	**BX180M4**			**N280TC**	79,200	84,100	25,700
2.2	624,400	2.2	803		**317MR4**	**BE180M4**	**BX180M4**			**N280TC**	79,400	84,300	25,900
2.3	608,000	1.2	782		**315MR4**	**BE180M4**	**BX180M4**			**N280TC**	32,600	39,800	15,400
2.3	609,400	1.6	784	**316ML4**		**BE180M4**	**BX180M4**			**N280TC**	50,800	57,000	25,700
2.3	608,000	1.6	782		**316MR4**	**BE180M4**	**BX180M4**			**N280TC**	50,800	57,000	25,600
2.4	573,500	1.1	738	**314ML4**		**BE180M4**	**BX180M4**			**N280TC**	32,400	39,500	15,100
2.4	576,300	1.5	741	**315ML4**		**BE180M4**	**BX180M4**			**N280TC**	32,400	39,500	15,100
2.5	549,100	1.8	706	**316ML4**		**BE180M4**	**BX180M4**			**N280TC**	50,100	56,200	24,800
2.5	558,900	2.6	719	**317ML4**		**BE180M4**	**BX180M4**			**N280TC**	78,100	83,000	24,900
2.6	526,100	2.6	677		**317MR4**	**BE180M4**	**BX180M4**			**N280TC**	77,400	82,300	24,400
2.7	427,500	1.3	668	**314ML4**		**BE180M4**	**BX180M4**			**N280TC**	31,900	38,900	14,600
2.7	522,100	1.6	672	**315ML4**		**BE180M4**	**BX180M4**			**N280TC**	31,900	39,000	14,600
2.7	512,300	1.4	659		**315MR4**	**BE180M4**	**BX180M4**			**N280TC**	31,800	38,900	14,500
2.7	512,300	1.9	659		**316MR4**	**BE180M4**	**BX180M4**			**N280TC**	49,600	55,600	24,200
2.8	488,200	2.0	628	**316ML4**		**BE180M4**	**BX180M4**			**N280TC**	49,200	55,200	23,800
2.8	486,500	2.2	626		**317MR4**	**BE180M4**	**BX180M4**			**N280TC**	76,600	81,400	23,800
2.9	480,900	1.0	614		**314MR4**					**N280TC**	31,500	38,500	14,200
2.9	484,500	1.7	623		**315MR4**	**BE180M4**	**BX180M4**			**N280TC**	31,600	38,600	14,300
2.9	484,500	2.1	623		**316MR4**	**BE180M4**	**BX180M4**			**N280TC**	49,200	55,200	23,800
3.0	457,000	1.4	588	**314ML4**		**BE180M4**	**BX180M4**			**N280TC**	31,300	38,200	14,000
3.0	459,300	1.8	591	**315ML4**		**BE180M4**	**BX180M4**			**N280TC**	31,300	38,300	14,000
3.1	446,900	1.3	575	**314ML4**		**BE180M4**	**BX180M4**			**N280TC**	31,200	38,100	13,900
3.2	441,800	1.1	564	**313ML4**						**N280TC**	31,900	39,900	12,300
3.2	437,500	2.3	563	**316ML4**		**BE180M4**	**BX180M4**			**N280TC**	48,500	54,400	23,000
3.3	418,900	1.0	535		**313MR4**					**N280TC**	31,700	39,600	12,000
3.3	414,600	2.0	533	**315ML4**		**BE180M4**	**BX180M4**			**N280TC**	30,900	37,700	13,500
3.4	413,700	1.4	528		**314MR4**					**N280TC**	30,800	37,600	13,500
3.4	408,200	2.1	525		**315MR4**	**BE180M4**	**BX180M4**			**N280TC**	30,800	37,600	13,500
3.4	408,200	2.7	525		**316MR4**	**BE180M4**	**BX180M4**			**N280TC**	48,000	53,900	22,400
3.5	401,300	1.0	512	**311ML4**						**N280TC**	22,700	23,700	9,650
3.5	402,500	1.0	514	**313ML4**						**N280TC**	31,500	39,400	11,900
3.6	388,800	1.1	496		**313MR4**					**N280TC**	31,300	39,200	11,700
3.6	393,400	1.7	495	**314ML4**		**BE180M4**	**BX180M4**			**N280TC**	30,600	37,300	13,200
3.6	389,000	2.8	500	**316ML4**		**BE180M4**	**BX180M4**			**N280TC**	47,700	53,500	22,100
3.7	378,400	2.2	487	**315ML4**		**BE180M4**	**BX180M4**			**N280TC**	30,500	37,200	13,100
3.9	354,000	1.4	452	**313ML4**						**N280TC**	30,900	38,700	11,400
3.9	356,100	1.8	458	**314ML4**		**BE180M4**	**BX180M4**			**N280TC**	30,200	36,900	12,900
4.0	352,900	1.1	450		**313MR4**					**N280TC**	30,900	38,700	11,400
4.0	348,600	1.4	445		**314MR4**					**N280TC**	30,100	36,700	12,700
4.0	342,800	2.4	441	**315ML4**		**BE180M4**	**BX180M4**			**N280TC**	30,100	36,700	12,700
4.1	343,100	1.0	438		**311MR4**					**N280TC**	22,200	23,200	9,160
4.1	334,600	2.7	430		**316MR4**	**BE180M4**	**BX180M4**			**N280TC**	46,700	52,300	21,000
4.2	329,700	1.8	421		**314MR4**					**N280TC**	29,900	36,400	12,500
4.3	321,600	1.3	410	**311ML4**						**N280TC**	22,000	22,900	8,960
4.3	323,500	1.0	413		**311MR4**					**N280TC**	22,000	23,000	8,980
4.3	318,100	2.6	409		**315MR4**	**BE180M4**	**BX180M4**			**N280TC**	29,700	36,300	12,400
4.5	308,800	1.6	394	**313ML4**						**N280TC**	30,300	38,000	10,900
4.5	306,300	2.1	394	**314ML4**		**BE180M4**	**BX180M4**			**N280TC**	29,600	36,100	12,200

Bonfiglioli Riduttori

P_1 = 25 hp

n_2 rpm	T_2 lb•in	S	i			IE2	IE3	IE2	IE3	NEMA	Rn_2 [lbs] NHC/HC NPC/PC	HZ/PZ	FZ
4.5	310,100	2.9	399	**316ML4**		**BE180M4**	**BX180M4**			**N280TC**	46,200	51,800	20,500
4.6	303,600	1.3	387		**313MR4**					**N280TC**	30,200	37,900	10,800
4.8	287,300	2.9	370	**315ML4**		**BE180M4**	**BX180M4**			**N280TC**	29,300	35,800	12,000
5.0	269,800	1.8	354		**314MR4**					**N280TC**	29,200	35,600	11,800
5.1	271,600	1.0	347		**310MR4**					**N280TC**	17,200	22,200	8,470
5.1	272,400	1.5	348	**311ML4**						**N280TC**	21,500	22,500	8,480
5.2	267,400	1.2	341		**311MR4**					**N280TC**	21,500	22,500	8,430
5.2	270,800	1.8	346		**313MR4**					**N280TC**	29,900	37,400	10,400
5.7	244,100	2.6	314	**314ML4**		**BE180M4**	**BX180M4**			**N280TC**	29,200	35,600	11,300
5.8	241,900	1.6	309		**313MR4**					**N280TC**	29,900	37,400	10,000
5.9	243,400	1.1	304	**313ML3**		**BE180M4**	**BX180M4**			**N280TC**	29,900	37,400	9,980
6.1	233,300	1.0	291	**311ML3**		**BE180M4**	**BX180M4**			**N280TC**	21,500	22,500	7,990
6.1	230,000	1.4	294		**311MR4**					**N280TC**	21,500	22,500	8,010
6.3	220,300	1.8	281		**313MR4**					**N280TC**	29,900	37,400	9,720
6.4	216,500	1.1	276		**310MR4**					**N280TC**	17,200	22,200	7,850
6.4	216,500	1.8	276		**314MR4**					**N280TC**	29,200	35,600	10,900
6.7	208,400	1.8	266		**311MR4**					**N280TC**	21,500	22,500	7,750
6.9	202,400	1.0	258		**310MR4**					**N280TC**	17,200	22,200	7,680
7.1	202,200	1.9	252	**313ML3**		**BE180M4**	**BX180M4**			**N280TC**	29,900	37,400	9,380
7.3	196,600	1.6	237	**311ML3**		**BE180M4**	**BX180M4**			**N280TC**	21,500	22,500	7,550
7.4	191,900	2.2	240	**314ML3**		**BE180M4**	**BX180M4**				29,200	35,600	10,400
7.4	192,900	2.7	241	**315ML3**		**BE180M4**	**BX180M4**				29,200	35,600	10,400
7.5	186,200	1.3	238		**310MR4**					**N280TC**	17,200	22,200	7,470
7.5	185,600	1.8	237		**313MR4**					**N280TC**	29,900	37,400	9,180
7.5	186,200	1.8	238		**314MR4**					**N280TC**	29,200	35,600	10,300
7.7	184,400	0.9	230	**310ML3**		**BE180M4**	**BX180M4**			**N280TC**	17,200	22,200	7,390
7.8	179,200	1.8	229		**311MR4**					**N280TC**	21,500	22,500	7,370
8.5	167,200	2.2	209	**313ML3**		**BE180M4**	**BX180M4**			**N280TC**	29,900	37,400	8,800
8.6	161,300	1.2	206		**310MR4**					**N280TC**	17,200	22,200	7,120
8.7	161,100	1.0	206		**309R4**					**N280TC**	14,700	20,000	3,940
8.8	161,700	1.2	202	**310ML3**		**BE180M4**	**BX180M4**			**N280TC**	17,200	22,200	7,070
8.8	162,500	1.9	203	**311ML3**		**BE180M4**	**BX180M4**			**N280TC**	21,500	22,500	7,080
8.9	157,200	1.8	201		**313MR4**					**N280TC**	29,900	37,400	8,690
9.0	155,300	1.8	198		**311MR4**					**N280TC**	21,500	22,500	7,030
9.2	155,100	2.8	194	**313ML3**		**BE180M4**	**BX180M4**			**N280TC**	29,900	37,400	8,580
9.3	149,400	1.0	191		**309R4**					**N280TC**	14,700	20,000	3,840
9.3	153,200	1.8	191	**311ML3**		**BE180M4**	**BX180M4**			**N280TC**	21,500	22,500	6,950
9.4	148,400	1.6	189		**310MR4**					**N280TC**	17,200	22,200	6,920
9.4	148,400	1.8	189		**314MR4**					**N280TC**	29,200	35,600	9,590
9.6	144,600	1.8	185		**313MR4**					**N280TC**	29,900	37,400	8,450
9.8	142,800	1.8	182		**311MR4**					**N280TC**	21,500	22,500	6,840
9.8	145,800	1.8	182	**313ML3**		**BE180M4**	**BX180M4**			**N280TC**	29,900	37,400	8,410
10.0	142,000	1.1	177	**310ML3**		**BE180M4**	**BX180M4**			**N280TC**	17,200	22,200	6,770
10.1	140,800	2.6	176	**313ML3**		**BE180M4**	**BX180M4**			**N280TC**	29,800	37,300	8,310
10.4	136,900	2.3	171	**311ML3**		**BE180M4**	**BX180M4**			**N280TC**	21,300	22,500	6,690
10.8	129,400	1.1	165		**309R4**					**N280TC**	14,400	19,500	3,660
10.9	131,100	1.8	164	**310ML3**		**BE180M4**	**BX180M4**			**N280TC**	16,800	21,700	6,590
11.0	130,500	1.1	162	**309L3**						**N280TC**	14,300	19,400	3,640
11.1	125,700	1.8	160		**310MR4**					**N280TC**	16,700	21,500	6,550
11.1	129,100	2.4	161	**311ML3**		**BE180M4**	**BX180M4**			**N280TC**	20,900	22,500	6,560
11.1	125,700	1.8	160		**314MR4**					**N280TC**	28,300	34,500	9,070
11.5	121,000	1.8	154		**311MR4**					**N280TC**	20,600	22,500	6,470
11.6	122,600	2.2	153		**313MR3**	**BE180M4**	**BX180M4**			**N280TC**	28,600	35,700	7,940
11.7	119,100	1.0	152		**307R4**					**N280TC**	14,000	19,000	4,450
11.7	119,100	1.3	152		**309R4**					**N280TC**	14,000	19,000	3,560
11.8	122,100	3.0	151	**313ML3**						**N280TC**	28,400	35,600	7,910
11.9	119,700	1.6	149	**310ML3**		**BE180M4**	**BX180M4**			**N280TC**	16,300	21,100	6,400

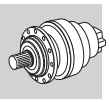

A

P_1 = 25 hp

n_2 rpm	T_2 lb•in	S	i			IE2	IE3	IE2	IE3	NEMA	Rn_2 [lbs] NHC/HC NPC/PC	HZ/PZ	FZ
12.1	117,800	2.6	147	**311ML3**		**BE180M4**	**BX180M4**			**N280TC**	20,300	22,500	6,360
12.1	117,500	2.0	147		**311MR3**	**BE180M4**	**BX180M4**			**N280TC**	20,300	22,500	6,360
12.2	118,200	1.0	146	**307L3**						**N280TC**	13,800	18,800	4,400
12.8	112,100	1.2	139	**309L3**						**N280TC**	13,600	18,500	3,460
13.1	106,500	1.8	136		**310MR4**					**N280TC**	15,900	20,500	6,200
13.2	108,400	2.0	135	**310ML3**		**BE180M4**	**BX180M4**			**N280TC**	15,900	20,500	6,190
13.4	106,700	2.8	133	**311ML3**		**BE180M4**	**BX180M4**			**N280TC**	19,700	22,500	6,160
14.1	101,700	1.1	126	**307L3**						**N280TC**	13,200	18,000	4,180
14.1	101,700	1.4	126	**309L3**						**N280TC**	13,200	18,000	3,350
14.4	99,000	3.0	124		**311MR3**	**BE180M4**	**BX180M4**			**N280TC**	19,300	22,500	6,010
14.9	96,700	1.2	120		**309R3**					**N280TC**	13,000	17,700	3,290
14.9	96,700	1.5	120		**310MR3**					**N280TC**	15,300	19,700	5,940
15.0	95,400	2.0	119	**310ML3**		**BE180M4**	**BX180M4**			**N280TC**	15,300	19,700	5,930
15.7	91,500	1.0	113	**307L3**						**N280TC**	12,800	17,400	4,040
15.7	91,500	1.5	113	**309L3**						**N280TC**	12,800	17,400	3,230
16.5	86,400	2.4	108	**310ML3**		**BE180M4**	**BX180M4**			**N280TC**	14,800	19,100	5,740
17.1	84,200	0.9	104	**306L3**						**N280TC**	9,990	12,600	3,060
17.7	81,000	1.3	100	**307L3**						**N280TC**	12,400	16,800	3,880
17.7	81,000	1.7	100	**309L3**						**N280TC**	12,400	16,800	3,100
17.7	80,800	2.2	101	**310ML3**		**BE180M4**	**BX180M4**			**N280TC**	14,500	18,700	5,610
18.0	80,000	0.9	99.0		**307R3**					**N280TC**	12,300	16,700	3,860
18.0	80,000	1.4	99.0		**309R3**					**N280TC**	12,300	16,700	3,090
18.0	80,000	1.7	99.0		**310MR3**					**N280TC**	14,400	18,600	5,580
19.1	75,100	1.4	93.0	**307L3**						**N280TC**	12,100	16,400	3,780
19.1	75,100	1.7	93.0	**309L3**						**N280TC**	12,100	16,400	3,030
19.2	74,300	2.6	92.7	**310ML3**		**BE180M4**	**BX180M4**			**N280TC**	14,200	18,300	5,460
20.2	71,300	1.0	88.3	**306L3**						**N280TC**	9,510	12,000	2,890
21.0	68,500	1.0	84.7		**306R3**					**N280TC**	9,390	11,800	2,850
21.3	67,400	1.3	83.4		**307R3**					**N280TC**	11,700	15,900	3,650
21.3	67,400	1.8	83.4		**309R3**					**N280TC**	11,700	15,900	2,920
21.3	67,400	1.8	83.4		**310MR3**					**N280TC**	13,700	17,700	5,270
22.1	65,100	1.4	80.6	**307L3**						**N280TC**	11,600	15,700	3,610
22.1	65,100	2.0	80.6	**309L3**						**N280TC**	11,600	15,700	2,880
22.2	64,400	2.8	80.3	**310ML3**		**BE180M4**	**BX180M4**			**N280TC**	13,600	17,500	5,200
22.6	63,500	1.5	78.6		**307R3**					**N280TC**	11,500	15,600	3,580
22.6	63,500	1.8	78.6		**310MR3**					**N280TC**	13,500	17,400	5,170
23.1	62,200	1.1	77.0	**306L3**						**N280TC**	9,130	11,500	2,760
24.0	59,900	1.7	74.1	**307L3**						**N280TC**	11,300	15,300	3,510
24.0	59,900	2.1	74.1	**309L3**						**N280TC**	11,300	15,300	2,810
24.4	58,900	1.1	72.9		**306R3**					**N280TC**	8,980	11,300	2,710
24.8	58,000	1.5	71.8		**307R3**					**N280TC**	11,200	15,200	3,470
24.8	58,000	1.8	71.8		**309R3**					**N280TC**	11,200	15,200	2,770
24.8	58,000	1.8	71.8		**310MR3**					**N280TC**	13,100	16,900	5,010
26.4	54,500	1.1	67.5		**306R3**					**N280TC**	8,770	11,100	2,640
27.3	52,700	1.2	65.2	**306L3**						**N280TC**	8,680	10,900	2,610
27.4	52,500	1.8	65.0		**307R3**					**N280TC**	10,900	14,800	3,360
27.4	52,500	1.8	65.0		**309R3**					**N280TC**	10,900	14,800	2,680
27.4	52,500	1.8	65.0		**310MR3**					**N280TC**	12,700	16,400	4,850
29.4	48,900	1.9	60.5	**307L3**						**N280TC**	10,600	14,400	3,280
29.4	48,900	2.4	60.5	**309L3**						**N280TC**	10,600	14,400	2,620
31	46,900	1.4	58.1		**306R3**					**N280TC**	8,390	10,600	2,510
32	46,500	1.0	56.3	**306L2**		**BE180M4**	**BX180M4**			**N280TC**	8,310	10,500	2,490
32	45,200	1.8	55.9		**307R3**					**N280TC**	10,400	14,100	3,190
32	45,200	1.8	55.9		**309R3**					**N280TC**	10,400	14,100	2,550
32	45,200	1.8	55.9		**310MR3**					**N280TC**	12,200	15,700	4,610
33	43,000	1.4	53.2	**306L3**						**N280TC**	8,170	10,300	2,440
35	40,600	0.9	50.3		**305R3**					**N280TC**	5,850	7,380	1,640

Bonfiglioli Riduttori

P_1 = 25 hp

n_2 rpm	T_2 lb•in	S	i			IE2	IE3	IE2	IE3	NEMA	Rn_2 [lbs] NHC/HC NPC/PC	HZ/PZ	FZ
35	41,400	2.2	51.3	**307L3**						**N280TC**	10,100	13,700	3,100
35	41,400	2.7	51.3	**309L3**						**N280TC**	10,100	13,700	2,480
38	37,700	1.0	46.6		**305R3**					**N280TC**	5,720	7,220	1,600
38	38,400	1.5	46.5	**306L2**		**BE180M4**	**BX180M4**			**N280TC**	7,850	9,890	2,330
38	37,400	1.7	46.3		**306R3**					**N280TC**	7,830	9,880	2,330
38	38,600	1.9	46.7	**307L2**		**BE180M4**	**BX180M4**			**N280TC**	9,830	13,400	3,010
38	38,600	2.9	46.7	**309L2**		**BE180M4**	**BX180M4**			**N280TC**	9,830	13,400	2,410
40	36,000	1.8	44.6		**307R3**					**N280TC**	9,690	13,200	2,960
40	36,000	1.8	44.6		**309R3**					**N280TC**	9,690	13,200	2,370
40	36,000	1.8	44.6		**310MR3**					**N280TC**	11,400	14,700	4,270
42	34,400	1.0	42.6		**305R3**					**N280TC**	5,560	7,030	1,550
45	31,700	1.8	39.2		**306R3**					**N280TC**	7,450	9,400	2,210
46	32,000	1.2	38.4	**305L2**						**N280TC**	5,390	6,810	1,500
46	31,800	1.8	38.4	**306L2**		**BE180M4**	**BX180M4**			**N280TC**	7,410	9,340	2,190
46	31,900	2.3	38.6	**307L2**		**BE180M4**	**BX180M4**			**N280TC**	9,280	12,600	2,820
47	30,500	1.8	37.7		**307R3**					**N280TC**	9,220	12,500	2,800
47	30,500	1.8	37.7		**309R3**					**N280TC**	9,220	12,500	2,240
47	30,500	1.8	37.7		**310MR3**					**N280TC**	10,800	14,000	4,040
48	30,000	1.0	37.1		**304R3**					**N280TC**	5,340	6,740	1,490
48	30,000	1.2	37.1		**305R3**					**N280TC**	5,340	6,740	1,490
50	29,800	1.1	35.8	**305L2**						**N280TC**	5,280	6,670	1,470
54	27,300	2.2	33.1	**306L2**		**BE180M4**	**BX180M4**			**N280TC**	7,080	8,930	2,080
54	26,800	1.8	33.2		**306R3**					**N280TC**	7,090	8,940	2,090
55	26,900	3.0	32.6	**307L2**		**BE180M4**	**BX180M4**			**N280TC**	8,820	12,000	2,670
56	25,600	1.8	31.6		**307R3**					**N280TC**	8,740	11,900	2,640
56	25,600	1.8	31.6		**309R3**					**N280TC**	8,740	11,900	2,110
57	25,400	1.1	31.5		**304R3**					**N280TC**	5,080	6,429	1,410
57	25,400	1.3	31.5		**305R3**					**N280TC**	5,080	6,429	1,410
58	25,600	1.0	30.8	**304L2**						**N280TC**	5,050	6,370	1,400
58	25,600	1.4	30.8	**305L2**						**N280TC**	5,050	6,370	1,400
63	23,500	2.4	28.4	**306L2**		**BE180M4**	**BX180M4**			**N280TC**	6,770	8,530	1,980
67	22,000	1.4	26.4	**305L2**						**N280TC**	4,820	6,090	1,330
68	21,800	2.5	26.4	**306L2**		**BE180M4**	**BX180M4**			**N280TC**	6,620	8,340	1,930
69	20,700	1.3	25.7		**304R3**					**N280TC**	4,780	6,040	1,310
69	20,700	1.5	25.7		**305R3**					**N280TC**	4,780	6,040	1,310
73	20,400	1.3	24.5	**304L2**						**N280TC**	4,710	5,950	1,290
73	20,400	1.6	24.5	**305L2**						**N280TC**	4,710	5,950	1,290
78	18,900	1.0	22.7	**303L2**						**N280TC**	4,610	5,820	1,260
78	18,900	1.3	22.7	**304L2**						**N280TC**	4,610	5,820	1,260
78	18,900	1.8	22.7	**305L2**						**N280TC**	4,610	5,820	1,260
79	18,700	2.8	22.7	**306L2**		**BE180M4**	**BX180M4**			**N280TC**	6,320	7,970	1,840
86	17,300	1.5	20.8	**304L2**						**N280TC**	4,480	5,660	1,220
86	17,300	1.6	20.8	**305L2**						**N280TC**	4,480	5,660	1,220
93	16,000	1.6	19.2		**305R2**					**N280TC**	4,380	5,530	1,190
93	16,000	1.8	19.2		**306R2**					**N280TC**	6,020	7,590	1,740
98	15,100	1.1	18.1	**303L2**						**N280TC**	4,300	5,440	1,170
98	15,100	1.6	18.1	**304L2**						**N280TC**	4,300	5,440	1,170
98	15,100	2.0	18.1	**305L2**						**N280TC**	4,300	5,440	1,170
106	14,000	1.5	16.8		**304R2**					**N280TC**	4,210	5,320	1,140
112	13,200	1.2	15.9		**303R2**					**N280TC**	4,140	5,230	1,120
112	13,200	1.8	15.9		**305R2**					**N280TC**	4,140	5,230	1,120
112	13,200	1.8	15.9		**306R2**					**N280TC**	5,680	7,170	1,630
116	12,800	1.1	15.3	**303L2**						**N280TC**	4,100	5,170	1,110
116	12,800	1.9	15.3	**304L2**						**N280TC**	4,100	5,170	1,110
116	12,800	2.0	15.3	**305L2**						**N280TC**	4,100	5,170	1,110
130	11,400	1.5	13.7		**303R2**					**N280TC**	3,960	5,000	1,060
130	11,400	1.8	13.7		**304R2**					**N280TC**	3,960	5,000	1,060

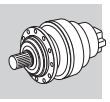

A

P_1 = 25 hp

n_2 rpm	T_2 lb•in	S	i			IE2	IE3	IE2	IE3	NEMA	Rn_2 [lbs] NHC/HC NPC/PC	HZ/PZ	FZ
130	11,400	1.8	13.7		**305R2**					**N280TC**	3,960	5,000	1,060
130	11,400	1.8	13.7		**306R2**					**N280TC**	5,430	6,850	1,550
142	10,400	1.3	12.5	**303L2**						**N280TC**	3,850	4,870	1,030
142	10,400	2.2	12.5	**304L2**						**N280TC**	3,850	4,870	1,030
142	10,400	2.4	12.5	**305L2**						**N280TC**	3,850	4,870	1,030
147	10,100	1.0	12.1	**301L2**						**N280TC**	1,990	2,360	340
151	9,850	1.0	11.8		**301R2**					**N280TC**	1,970	2,340	340
163	9,070	1.8	10.9		**303R2**					**N280TC**	3,690	4,670	990
163	9,070	1.8	10.9		**304R2**					**N280TC**	3,690	4,670	990
163	9,070	1.8	10.9		**305R2**					**N280TC**	3,690	4,670	990
163	9,070	1.8	10.9		**306R2**					**N280TC**	5,080	6,400	1,440
193	7,680	1.8	9.23		**303R2**					**N280TC**	3,520	4,440	930
193	7,680	1.8	9.23		**304R2**					**N280TC**	3,520	4,440	930
193	7,680	1.8	9.23		**305R2**					**N280TC**	3,520	4,440	930
193	7,680	1.8	9.23		**306R2**					**N280TC**	4,830	6,090	1,360
204	7,280	1.3	8.74		**301R2**					**N280TC**	1,800	2,140	310
237	6,390	1.6	7.50	**303L1**		**BE180M4**	**BX180M4**			**N280TC**	3,300	4,170	870
237	6,390	3.0	7.50	**305L1**		**BE180M4**	**BX180M4**			**N280TC**	3,300	4,170	870
247	6,180	1.0	7.20	**301L1**						**N280TC**	1,700	2,020	290
250	5,940	1.5	7.13		**301R2**					**N280TC**	1,700	2,010	290
271	5,600	2.8	6.57	**304L1**		**BE180M4**	**BX180M4**			**N280TC**	3,180	4,010	830
287	5,280	2.2	6.20	**303L1**		**BE180M4**	**BX180M4**			**N280TC**	3,120	3,940	820
309	4,950	1.6	5.77	**301L1**						**N280TC**	1,590	1,890	270
334	4,540	2.8	5.33	**303L1**		**BE180M4**	**BX180M4**			**N280TC**	2,980	3,770	780
418	3,660	1.1	4.26	**300L1**						**N280TC**	1,450	1,830	240
418	3,660	2.0	4.26	**301L1**						**N280TC**	1,450	1,720	240
511	2,990	1.3	3.48	**300L1**						**N280TC**	1,370	1,730	220
511	2,990	2.4	3.48	**301L1**						**N280TC**	1,370	1,620	220

P_1 = 30 hp

n_2 rpm	T_2 lb•in	S	i			IE2	IE3	IE2	IE3	NEMA	Rn_2 [lbs] NHC/HC NPC/PC	HZ/PZ	FZ
1.1	1,474,400	0.9	1595	**317ML4**		**BE180L4**	**BX180L4**			**N280TC**	87,600	93,000	32,500
1.3	1,218,900	1.1	1318	**317ML4**		**BE180L4**	**BX180L4**			**N280TC**	85,200	90,500	30,500
1.3	1,283,900	2.3	1389	**319L4**		**BE180L4**	**BX180L4**				99,200	109,300	41,400
1.5	1,104,500	2.7	1195	**319L4**		**BE180L4**	**BX180L4**				97,100	106,900	39,400
1.6	1,021,000	1.0	1104	**316ML4**		**BE180L4**	**BX180L4**			**N280TC**	53,400	59,900	28,800
1.6	1,048,500	1.3	1134	**317ML4**		**BE180L4**	**BX180L4**			**N280TC**	83,400	88,600	29,000
1.7	942,700	1.1	1020	**316ML4**		**BE180L4**	**BX180L4**			**N280TC**	52,800	59,200	28,000
1.7	954,500	1.6	1032	**317ML4**		**BE180L4**	**BX180L4**			**N280TC**	82,300	87,400	28,100
1.7	979,200	2.3	1059	**318ML4**		**BE180L4**	**BX180L4**				84,300	88,700	37,900
1.9	881,400	1.4	953		**317MR4**	**BE180L4**	**BX180L4**			**N280TC**	81,400	86,400	27,400
1.9	842,300	2.8	911	**318ML4**		**BE180L4**	**BX180L4**				82,500	86,800	36,000
2.0	813,600	1.2	880	**316ML4**		**BE180L4**	**BX180L4**			**N280TC**	51,700	58,000	26,700
2.0	835,500	1.7	904	**317ML4**		**BE180L4**	**BX180L4**			**N280TC**	80,700	85,800	26,900
2.1	796,900	1.1	862	**315ML4**		**BE180L4**	**BX180L4**			**N280TC**	33,100	40,400	15,900
2.2	732,300	2.3	792	**317ML4**		**BE180L4**	**BX180L4**			**N280TC**	79,200	84,200	25,800
2.2	742,700	1.9	803		**317MR4**	**BE180L4**	**BX180L4**			**N280TC**	79,400	84,400	25,900
2.3	723,200	1.0	782		**315MR4**	**BE180L4**	**BX180L4**			**N280TC**	32,600	39,800	15,400
2.3	724,900	1.4	784	**316ML4**		**BE180L4**	**BX180L4**			**N280TC**	50,900	57,000	25,700
2.3	723,200	1.4	782		**316MR4**	**BE180L4**	**BX180L4**			**N280TC**	50,800	57,000	25,700
2.4	682,200	0.9	738	**314ML4**		**BE180L4**	**BX180L4**			**N280TC**	32,400	39,500	15,100

Bonfiglioli Riduttori

P_1 = 30 hp

n_2 rpm	T_2 lb•in	S	i			IE2	IE3	IE2	IE3	NEMA	Rn_2 [lbs] NHC/HC NPC/PC	HZ/PZ	FZ
2.4	685,500	1.2	741	**315ML4**		**BE180L4**	**BX180L4**			**N280TC**	32,400	39,500	15,100
2.5	653,100	1.5	706	**316ML4**		**BE180L4**	**BX180L4**			**N280TC**	50,100	56,200	24,800
2.5	664,800	2.2	719	**317ML4**		**BE180L4**	**BX180L4**			**N280TC**	78,200	83,000	25,000
2.6	621,000	1.3	672	**315ML4**		**BE180L4**	**BX180L4**			**N280TC**	31,900	39,000	14,600
2.6	625,800	2.2	677		**317MR4**	**BE180L4**	**BX180L4**			**N280TC**	77,500	82,300	24,500
2.7	617,900	1.1	668	**314ML4**		**BE180L4**	**BX180L4**			**N280TC**	31,900	39,000	14,600
2.7	609,400	1.2	659		**315MR4**	**BE180L4**	**BX180L4**			**N280TC**	31,900	38,900	14,500
2.7	609,400	1.6	659		**316MR4**	**BE180L4**	**BX180L4**			**N280TC**	49,600	55,600	24,200
2.8	576,300	1.5	623		**315MR4**	**BE180L4**	**BX180L4**			**N280TC**	31,600	38,600	14,300
2.8	580,700	1.7	628	**316ML4**		**BE180L4**	**BX180L4**			**N280TC**	49,300	55,300	23,900
2.8	576,300	1.7	623		**316MR4**	**BE180L4**	**BX180L4**			**N280TC**	49,200	55,200	23,800
2.8	578,700	1.9	626		**317MR4**	**BE180L4**	**BX180L4**			**N280TC**	76,600	81,400	23,800
2.9	571,900	2.6	619	**317ML4**		**BE180L4**	**BX180L4**			**N280TC**	76,500	81,300	23,700
3.0	543,600	1.2	588	**314ML4**		**BE180L4**	**BX180L4**			**N280TC**	31,300	38,200	14,000
3.0	546,300	1.5	591	**315ML4**		**BE180L4**	**BX180L4**			**N280TC**	31,400	38,300	14,000
3.1	524,300	0.9	564	**313ML4**						**N280TC**	31,900	40,000	12,300
3.1	531,600	1.1	575	**314ML4**		**BE180L4**	**BX180L4**			**N280TC**	31,200	38,100	13,900
3.2	520,500	1.9	563	**316ML4**		**BE180L4**	**BX180L4**			**N280TC**	48,500	54,400	23,000
3.3	493,200	1.7	533	**315ML4**		**BE180L4**	**BX180L4**			**N280TC**	30,900	37,700	13,600
3.4	491,000	1.2	528		**314MR4**					**N280TC**	30,900	37,700	13,500
3.4	485,600	1.7	525		**315MR4**	**BE180L4**	**BX180L4**			**N280TC**	30,800	37,600	13,500
3.4	485,600	2.3	525		**316MR4**	**BE180L4**	**BX180L4**			**N280TC**	48,000	53,900	22,500
3.5	462,700	2.4	500	**316ML4**		**BE180L4**	**BX180L4**			**N280TC**	47,700	53,500	22,100
3.6	461,400	0.9	496		**313MR4**					**N280TC**	31,300	39,200	11,800
3.6	457,300	1.5	495	**314ML4**		**BE180L4**	**BX180L4**			**N280TC**	30,600	37,300	13,200
3.6	450,100	1.9	487	**315ML4**		**BE180L4**	**BX180L4**			**N280TC**	30,500	37,200	13,100
3.9	429,100	1.2	452	**313ML4**						**N280TC**	30,900	38,700	11,400
3.9	418,900	1.0	450		**313MR4**					**N280TC**	30,900	38,700	11,400
3.9	423,600	1.6	458	**314ML4**		**BE180L4**	**BX180L4**			**N280TC**	30,200	36,900	12,900
4.0	413,700	1.2	445		**314MR4**					**N280TC**	30,100	36,800	12,800
4.0	407,700	2.1	441	**315ML4**		**BE180L4**	**BX180L4**			**N280TC**	30,100	36,700	12,700
4.0	413,400	2.7	447	**316ML4**		**BE180L4**	**BX180L4**			**N280TC**	46,900	52,600	21,300
4.0	409,200	2.7	443		**316MR4**	**BE180L4**	**BX180L4**			**N280TC**	46,900	52,600	21,200
4.1	398,000	2.3	430		**316MR4**	**BE180L4**	**BX180L4**			**N280TC**	46,700	52,400	21,000
4.2	391,300	1.5	421		**314MR4**					**N280TC**	29,900	36,500	12,500
4.3	381,600	1.1	410	**311ML4**						**N280TC**	22,000	23,000	8,970
4.3	378,400	2.2	409		**315MR4**	**BE180L4**	**BX180L4**			**N280TC**	29,800	36,300	12,400
4.4	368,900	2.4	399	**316ML4**		**BE180L4**	**BX180L4**			**N280TC**	46,200	51,800	20,500
4.5	366,500	1.4	394	**313ML4**						**N280TC**	30,300	38,000	10,900
4.5	364,400	1.8	394	**314ML4**		**BE180L4**	**BX180L4**			**N280TC**	29,600	36,100	12,300
4.6	360,400	1.1	387		**313MR4**					**N280TC**	30,300	37,900	10,800
4.8	341,700	2.5	370	**315ML4**		**BE180L4**	**BX180L4**			**N280TC**	29,300	35,800	12,000
4.9	335,300	2.6	363		**316MR4**	**BE180L4**	**BX180L4**			**N280TC**	45,600	51,100	19,900
5.0	329,700	1.5	354		**314MR4**					**N280TC**	29,200	35,600	11,800
5.1	323,300	1.2	348	**311ML4**						**N280TC**	21,500	22,500	8,490
5.1	321,400	1.5	346		**313MR4**					**N280TC**	29,900	37,400	10,400
5.1	318,800	2.6	345		**315MR4**	**BE180L4**	**BX180L4**			**N280TC**	29,200	35,600	11,700
5.1	319,500	2.8	346	**316ML4**		**BE180L4**	**BX180L4**			**N280TC**	45,400	50,900	19,500
5.2	317,400	1.0	341		**311MR4**					**N280TC**	21,500	22,500	8,430
5.3	311,800	2.8	337		**316MR4**	**BE180L4**	**BX180L4**			**N280TC**	45,400	50,900	19,400
5.7	287,200	1.3	309		**313MR4**					**N280TC**	29,900	37,400	10,000
5.7	290,400	2.2	314	**314ML4**		**BE180L4**	**BX180L4**			**N280TC**	29,200	35,600	11,400
5.8	289,500	0.9	304	**313ML3**		**BE180L4**	**BX180L4**			**N280TC**	29,900	37,400	9,980
5.9	279,500	3.0	302	**315ML4**		**BE180L4**	**BX180L4**			**N280TC**	29,200	35,600	11,200
6.0	273,000	1.2	294		**311MR4**					**N280TC**	21,500	22,500	8,020
6.3	253,500	1.5	281		**313MR4**					**N280TC**	29,900	37,400	9,730
6.4	256,900	0.9	276		**310MR4**					**N280TC**	17,200	22,200	7,860

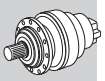

A

P_1 = 30 hp

n_2 rpm	T_2 lb•in	S	i			IE2	IE3	IE2	IE3	NEMA	Rn_2 [lbs] NHC/HC NPC/PC	HZ/PZ	FZ
6.4	256,900	1.5	276		**314MR4**					**N280TC**	29,200	35,600	10,900
6.7	247,300	1.5	266		**311MR4**					**N280TC**	21,500	22,500	7,760
7.0	240,500	1.6	252	**313ML3**		**BE180L4**	**BX180L4**			**N280TC**	29,900	37,400	9,390
7.2	233,900	1.4	237	**311ML3**		**BE180L4**	**BX180L4**			**N280TC**	21,500	22,500	7,560
7.4	228,300	1.8	240	**314ML3**		**BE180L4**	**BX180L4**				29,200	35,600	10,400
7.4	229,400	2.3	241	**315ML3**		**BE180L4**	**BX180L4**				29,200	35,600	10,400
7.5	221,000	1.1	238		**310MR4**					**N280TC**	17,200	22,200	7,480
7.5	220,300	1.5	237		**313MR4**					**N280TC**	29,900	37,400	9,190
7.5	221,000	1.5	238		**314MR4**					**N280TC**	29,200	35,600	10,400
7.8	212,700	1.5	229		**311MR4**					**N280TC**	21,500	22,500	7,380
8.5	198,800	1.9	209	**313ML3**		**BE180L4**	**BX180L4**			**N280TC**	29,900	37,400	8,810
8.6	191,400	1.0	206		**310MR4**					**N280TC**	17,200	22,200	7,130
8.6	196,400	2.7	206	**314ML3**		**BE180L4**	**BX180L4**				29,200	35,600	9,870
8.8	192,400	1.0	202	**310ML3**		**BE180L4**	**BX180L4**			**N280TC**	17,200	22,200	7,080
8.8	193,300	1.6	203	**311ML3**		**BE180L4**	**BX180L4**			**N280TC**	21,500	22,500	7,090
8.8	186,600	1.5	201		**313MR4**					**N280TC**	29,900	37,400	8,700
9.0	184,300	1.5	198		**311MR4**					**N280TC**	21,500	22,500	7,040
9.2	184,500	2.3	194	**313ML3**		**BE180L4**	**BX180L4**			**N280TC**	29,900	37,400	8,590
9.3	182,200	1.6	191	**311ML3**		**BE180L4**	**BX180L4**			**N280TC**	21,500	22,500	6,950
9.4	176,100	1.3	189		**310MR4**					**N280TC**	17,200	22,200	6,930
9.4	176,100	1.5	189		**314MR4**					**N280TC**	29,200	35,600	9,600
9.6	171,700	1.5	185		**313MR4**					**N280TC**	29,900	37,400	8,460
9.7	169,500	1.5	182		**311MR4**					**N280TC**	21,500	22,500	6,840
9.8	173,500	1.5	182	**313ML3**		**BE180L4**	**BX180L4**			**N280TC**	29,900	37,400	8,429
10.0	168,900	0.9	177	**310ML3**		**BE180L4**	**BX180L4**			**N280TC**	17,200	22,200	6,780
10.1	167,500	2.2	176	**313ML3**		**BE180L4**	**BX180L4**			**N280TC**	29,800	37,300	8,320
10.4	162,900	1.9	171	**311ML3**		**BE180L4**	**BX180L4**			**N280TC**	21,300	22,500	6,700
10.7	153,600	0.9	165		**309R4**					**N280TC**	14,400	19,500	3,670
10.8	156,000	1.5	164	**310ML3**		**BE180L4**	**BX180L4**			**N280TC**	16,800	21,700	6,600
10.9	155,500	2.8	163	**313ML3**		**BE180L4**	**BX180L4**			**N280TC**	29,100	36,500	8,120
11.0	154,900	0.9	162	**309L3**						**N280TC**	14,300	19,400	3,640
11.0	153,500	2.0	161	**311ML3**		**BE180L4**	**BX180L4**			**N280TC**	20,900	22,500	6,570
11.1	149,200	1.5	160		**310MR4**					**N280TC**	16,700	21,600	6,560
11.1	149,200	1.5	160		**314MR4**					**N280TC**	28,300	34,500	9,080
11.3	149,700	2.8	157		**314MR3C**	**BE180L4**	**BX180L4**				28,100	34,300	9,020
11.5	143,600	1.5	154		**311MR4**					**N280TC**	20,700	22,500	6,470
11.6	145,800	1.8	153		**313MR3**	**BE180L4**	**BX180L4**			**N280TC**	28,600	35,800	7,940
11.7	141,300	1.1	152		**309R4**					**N280TC**	14,000	19,100	3,570
11.7	144,100	2.5	151	**313ML3**		**BE180L4**	**BX180L4**			**N280TC**	28,500	35,700	7,910
11.9	142,300	1.3	149	**310ML3**		**BE180L4**	**BX180L4**			**N280TC**	16,400	21,100	6,400
12.1	140,100	2.2	147	**311ML3**		**BE180L4**	**BX180L4**			**N280TC**	20,400	22,500	6,370
12.1	139,800	1.7	147		**311MR3**	**BE180L4**	**BX180L4**			**N280TC**	20,300	22,500	6,360
12.4	136,300	2.7	143	**313ML3**		**BE180L4**	**BX180L4**			**N280TC**	28,000	35,100	7,770
12.8	133,100	1.0	139	**309L3**						**N280TC**	13,600	18,500	3,460
13.1	128,900	1.7	135	**310ML3**		**BE180L4**	**BX180L4**			**N280TC**	15,900	20,500	6,200
13.1	126,400	1.5	136		**310MR4**					**N280TC**	15,900	20,500	6,200
13.3	126,900	2.4	133	**311ML3**		**BE180L4**	**BX180L4**			**N280TC**	19,800	22,500	6,160
14.0	121,200	2.9	127		**313MR3**	**BE180L4**	**BX180L4**			**N280TC**	27,000	33,800	7,470
14.1	120,700	0.9	126	**307L3**						**N280TC**	13,200	18,000	4,190
14.1	120,700	1.1	126	**309L3**						**N280TC**	13,200	18,000	3,350
14.4	117,800	2.5	124		**311MR3**	**BE180L4**	**BX180L4**			**N280TC**	19,300	22,500	6,010
14.8	114,800	1.0	120		**309R3**					**N280TC**	13,000	17,700	3,290
14.8	114,800	1.3	120		**310MR3**					**N280TC**	15,300	19,800	5,950
14.9	113,400	1.7	119	**310ML3**		**BE180L4**	**BX180L4**			**N280TC**	15,300	19,700	5,940
15.5	109,200	2.7	115	**311ML3**		**BE180L4**	**BX180L4**			**N280TC**	18,900	22,500	5,860
15.7	108,600	1.2	113	**309L3**						**N280TC**	12,800	17,400	3,230
16.5	102,700	2.0	108	**310ML3**		**BE180L4**	**BX180L4**			**N280TC**	14,800	19,100	5,740

Bonfiglioli Riduttori

P_1 = 30 hp

n_2 rpm	T_2 lb•in	S	i			IE2	IE3	IE2	IE3	NEMA	Rn_2 [lbs] NHC/HC NPC/PC	HZ/PZ	FZ
17.0	99,300	2.9	104		**311MR3**	**BE180L4**	**BX180L4**			**N280TC**	18,400	22,500	5,680
17.6	96,100	1.9	101	**310ML3**		**BE180L4**	**BX180L4**			**N280TC**	14,500	18,800	5,620
17.7	96,200	1.1	100	**307L3**						**N280TC**	12,400	16,800	3,880
17.7	96,200	1.4	100	**309L3**						**N280TC**	12,400	16,800	3,110
17.9	94,900	1.2	99.0		**309R3**					**N280TC**	12,300	16,800	3,090
17.9	94,900	1.4	99.0		**310MR3**					**N280TC**	14,500	18,700	5,580
18.4	91,800	2.8	96.3		**311MR3**	**BE180L4**	**BX180L4**			**N280TC**	17,900	22,500	5,530
19.1	89,200	1.2	93.0	**307L3**						**N280TC**	12,100	16,400	3,790
19.1	89,200	1.4	93.0	**309L3**						**N280TC**	12,100	16,400	3,030
19.1	88,400	2.2	92.7	**310ML3**		**BE180L4**	**BX180L4**			**N280TC**	14,200	18,300	5,460
21.3	80,000	1.1	83.4		**307R3**					**N280TC**	11,700	15,900	3,650
21.3	80,000	1.5	83.4		**309R3**					**N280TC**	11,700	15,900	2,920
21.3	80,000	1.5	83.4		**310MR3**					**N280TC**	13,700	17,700	5,270
22.0	77,300	1.2	80.6	**307L3**						**N280TC**	11,600	15,800	3,610
22.0	77,300	1.7	80.6	**309L3**						**N280TC**	11,600	15,800	2,890
22.1	76,600	2.3	80.3	**310ML3**		**BE180L4**	**BX180L4**			**N280TC**	13,600	17,500	5,210
22.6	75,400	1.3	78.6		**307R3**					**N280TC**	11,500	15,600	3,580
22.6	75,400	1.5	78.6		**310MR3**					**N280TC**	13,500	17,400	5,170
23.1	73,800	1.0	77.0	**306L3**						**N280TC**	9,130	11,500	2,760
23.9	71,100	1.4	74.1	**307L3**						**N280TC**	11,300	15,400	3,510
23.9	71,100	1.8	74.1	**309L3**						**N280TC**	11,300	15,400	2,810
24.0	70,400	2.7	73.9	**310ML3**		**BE180L4**	**BX180L4**			**N280TC**	13,200	17,100	5,060
24.4	69,900	0.9	72.9		**306R3**					**N280TC**	8,990	11,300	2,710
24.7	68,800	1.3	71.8		**307R3**					**N280TC**	11,200	15,200	3,470
24.7	68,800	1.5	71.8		**309R3**					**N280TC**	11,200	15,200	2,780
24.7	68,800	1.5	71.8		**310MR3**					**N280TC**	13,100	16,900	5,010
26.3	64,700	1.0	67.5		**306R3**					**N280TC**	8,780	11,100	2,650
27.2	62,500	1.0	65.2	**306L3**						**N280TC**	8,690	11,000	2,620
27.3	62,300	1.5	65.0		**307R3**					**N280TC**	10,900	14,800	3,360
27.3	62,300	1.5	65.0		**309R3**					**N280TC**	10,900	14,800	2,690
27.3	62,300	1.5	65.0		**310MR3**					**N280TC**	12,700	16,400	4,850
28.4	59,700	2.8	62.6	**310ML3**		**BE180L4**	**BX180L4**			**N280TC**	12,600	16,300	4,790
29.3	58,000	1.6	60.5	**307L3**						**N280TC**	10,600	14,500	3,280
29.3	58,000	2.1	60.5	**309L3**						**N280TC**	10,600	14,500	2,620
31	55,700	1.2	58.1		**306R3**					**N280TC**	8,390	10,600	2,520
32	53,600	1.5	55.9		**307R3**					**N280TC**	10,400	14,100	3,190
32	53,600	1.5	55.9		**309R3**					**N280TC**	10,400	14,100	2,560
32	53,600	1.5	55.9		**310MR3**					**N280TC**	12,200	15,700	4,610
33	51,100	1.2	53.2	**306L3**						**N280TC**	8,180	10,300	2,440
35	49,100	1.9	51.3	**307L3**						**N280TC**	10,100	13,800	3,100
35	49,100	2.3	51.3	**309L3**						**N280TC**	10,100	13,800	2,480
38	45,700	1.3	46.5	**306L2**		**BE180L4**	**BX180L4**			**N280TC**	7,850	9,900	2,340
38	44,400	1.4	46.3		**306R3**					**N280TC**	7,840	9,880	2,330
38	45,900	1.6	46.7	**307L2**		**BE180L4**	**BX180L4**			**N280TC**	9,840	13,400	3,010
38	45,900	2.4	46.7	**309L2**		**BE180L4**	**BX180L4**			**N280TC**	9,840	13,400	2,410
40	42,700	1.5	44.6		**307R3**					**N280TC**	9,700	13,200	2,960
40	42,700	1.5	44.6		**309R3**					**N280TC**	9,700	13,200	2,370
40	42,700	1.5	44.6		**310MR3**					**N280TC**	11,400	14,700	4,280
45	37,600	1.5	39.2		**306R3**					**N280TC**	7,460	9,400	2,210
46	38,000	1.0	38.4	**305L2**						**N280TC**	5,400	6,820	1,500
46	37,800	1.5	38.4	**306L2**		**BE180L4**	**BX180L4**			**N280TC**	7,429	9,350	2,190
46	38,000	1.9	38.6	**307L2**		**BE180L4**	**BX180L4**			**N280TC**	9,290	12,600	2,820
46	38,000	2.9	38.6	**309L2**		**BE180L4**	**BX180L4**			**N280TC**	9,290	12,600	2,260
47	36,200	1.5	37.7		**307R3**					**N280TC**	9,230	12,500	2,800
47	36,200	1.5	37.7		**309R3**					**N280TC**	9,230	12,500	2,240
47	36,200	1.5	37.7		**310MR3**					**N280TC**	10,800	14,000	4,050
48	35,600	1.1	37.1		**305R3**					**N280TC**	5,340	6,750	1,490

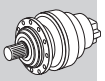

A

P_1 = 30 hp

n_2 rpm	T_2 lb•in	S	i			IE2	IE3	IE2	IE3	NEMA	Rn_2 [lbs] NHC/HC NPC/PC	HZ/PZ	FZ
53	31,800	1.5	33.2		**306R3**					**N280TC**	7,100	8,950	2,090
54	32,500	1.8	33.1	**306L2**		**BE180L4**	**BX180L4**			**N280TC**	7,090	8,940	2,090
55	32,000	2.5	32.6	**307L2**		**BE180L4**	**BX180L4**			**N280TC**	8,830	12,000	2,670
56	30,200	1.1	31.5		**305R3**					**N280TC**	5,080	6,429	1,410
56	30,300	1.5	31.6		**307R3**					**N280TC**	8,750	11,900	2,640
56	30,300	1.5	31.6		**309R3**					**N280TC**	8,750	11,900	2,110
58	30,400	1.2	30.8	**305L2**						**N280TC**	5,050	6,380	1,400
58	30,100	2.7	30.7	**307L2**		**BE180L4**	**BX180L4**			**N280TC**	8,670	11,800	2,620
62	28,000	2.0	28.4	**306L2**		**BE180L4**	**BX180L4**			**N280TC**	6,780	8,540	1,980
63	27,500	2.8	28.0	**307L2**		**BE180L4**	**BX180L4**			**N280TC**	8,440	11,500	2,540
67	26,100	1.2	26.4	**305L2**						**N280TC**	4,820	6,090	1,330
67	25,900	2.1	26.4	**306L2**		**BE180L4**	**BX180L4**			**N280TC**	6,620	8,350	1,930
69	24,600	1.1	25.7		**304R3**					**N280TC**	4,780	6,040	1,310
69	24,600	1.2	25.7		**305R3**					**N280TC**	4,780	6,040	1,310
72	24,200	1.1	24.5	**304L2**						**N280TC**	4,720	5,960	1,290
72	24,200	1.3	24.5	**305L2**						**N280TC**	4,720	5,960	1,290
75	23,100	3.0	23.5		**307R2**	**BE180L4**	**BX180L4**			**N280TC**	8,010	10,900	2,390
78	22,500	1.1	22.7	**304L2**						**N280TC**	4,610	5,830	1,260
78	22,500	1.5	22.7	**305L2**						**N280TC**	4,610	5,830	1,260
78	22,300	2.3	22.7	**306L2**		**BE180L4**	**BX180L4**			**N280TC**	6,330	7,980	1,840
85	20,500	1.2	20.8	**304L2**						**N280TC**	4,490	5,670	1,220
85	20,500	1.3	20.8	**305L2**						**N280TC**	4,490	5,670	1,220
92	19,000	1.3	19.2		**305R2**					**N280TC**	4,380	5,540	1,190
92	19,000	1.5	19.2		**306R2**					**N280TC**	6,020	7,590	1,740
98	17,900	0.9	18.1	**303L2**						**N280TC**	4,310	5,440	1,170
98	17,900	1.4	18.1	**304L2**						**N280TC**	4,310	5,440	1,170
98	17,900	1.7	18.1	**305L2**						**N280TC**	4,310	5,440	1,170
98	17,700	2.8	18.1	**306L2**		**BE180L4**	**BX180L4**			**N280TC**	5,910	7,450	1,710
105	16,600	1.3	16.8		**304R2**					**N280TC**	4,210	5,320	1,140
112	15,700	1.0	15.9		**303R2**					**N280TC**	4,140	5,230	1,120
112	15,700	1.5	15.9		**305R2**					**N280TC**	4,140	5,230	1,120
112	15,700	1.5	15.9		**306R2**					**N280TC**	5,690	7,170	1,630
116	15,200	0.9	15.3	**303L2**						**N280TC**	4,100	5,180	1,110
116	15,200	1.6	15.3	**304L2**						**N280TC**	4,100	5,180	1,110
116	15,200	1.7	15.3	**305L2**						**N280TC**	4,100	5,180	1,110
116	15,000	2.8	15.3	**306L2**		**BE180L4**	**BX180L4**			**N280TC**	5,630	7,090	1,610
130	13,500	1.2	13.7		**303R2**					**N280TC**	3,960	5,000	1,070
130	13,500	1.6	13.7		**304R2**					**N280TC**	3,960	5,000	1,070
130	13,500	1.6	13.7		**305R2**					**N280TC**	3,960	5,000	1,070
130	13,500	1.6	13.7		**306R2**					**N280TC**	5,440	6,850	1,550
142	12,400	1.1	12.5	**303L2**						**N280TC**	3,860	4,870	1,030
142	12,400	1.8	12.5	**304L2**						**N280TC**	3,860	4,870	1,030
142	12,400	2.0	12.5	**305L2**						**N280TC**	3,860	4,870	1,030
163	10,800	1.5	10.9		**303R2**					**N280TC**	3,700	4,670	990
163	10,800	1.5	10.9		**304R2**					**N280TC**	3,700	4,670	990
163	10,800	1.5	10.9		**305R2**					**N280TC**	3,700	4,670	990
163	10,800	1.5	10.9		**306R2**					**N280TC**	5,080	6,400	1,440
192	9,120	1.5	9.23		**303R2**					**N280TC**	3,520	4,440	930
192	9,120	1.5	9.23		**304R2**					**N280TC**	3,520	4,440	930
192	9,120	1.5	9.23		**305R2**					**N280TC**	3,520	4,440	930
192	9,120	1.5	9.23		**306R2**					**N280TC**	4,830	6,090	1,360
203	8,640	1.1	8.74		**301R2**					**N280TC**	1,800	2,140	310
237	7,600	1.3	7.50	**303L1**		**BE180L4**	**BX180L4**			**N280TC**	3,310	4,180	870
237	7,600	2.5	7.50	**305L1**		**BE180L4**	**BX180L4**			**N280TC**	3,310	4,180	870

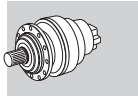

A

P_1 = 30 hp

n_2 rpm	T_2 lb•in	S	i			IE2	IE3	IE2	IE3	NEMA	Rn_2 [lbs] NHC/HC NPC/PC	HZ/PZ	FZ
249	7,050	1.2	7.13		**301R2**					**N280TC**	1,700	2,010	290
270	6,660	2.4	6.57	**304L1**		**BE180L4**	**BX180L4**			**N280TC**	3,180	4,010	830
286	6,280	1.9	6.20	**303L1**		**BE180L4**	**BX180L4**			**N280TC**	3,120	3,940	820
308	5,880	1.3	5.77	**301L1**						**N280TC**	1,590	1,890	270
333	5,400	2.3	5.33	**303L1**		**BE180L4**	**BX180L4**			**N280TC**	2,980	3,770	780
416	4,340	1.0	4.26	**300L1**						**N280TC**	1,450	1,840	240
416	4,340	1.7	4.26	**301L1**						**N280TC**	1,450	1,730	240
418	4,310	2.8	4.25	**303L1**		**BE180L4**	**BX180L4**			**N280TC**	2,790	3,520	720
510	3,550	1.1	3.48	**300L1**						**N280TC**	1,370	1,730	230
510	3,550	2.0	3.48	**301L1**						**N280TC**	1,370	1,620	230

P_1 = 40 hp

n_2 rpm	T_2 lb•in	S	i			IE2	IE3	IE2	IE3	NEMA	Rn_2 [lbs] NHC/HC NPC/PC	HZ/PZ	FZ
1.3	1,762,700	1.6	1389	**319L4**		**IEC200L4**				**N320TC**	99,400	109,400	41,500
1.5	1,516,300	1.9	1195	**319L4**		**IEC200L4**				**N320TC**	97,200	107,100	39,500
1.6	1,439,400	1.0	1134	**317ML4**		**IEC200L4**					83,500	88,700	29,100
1.7	1,310,400	1.2	1032	**317ML4**		**IEC200L4**					82,400	87,500	28,200
1.7	1,344,300	1.7	1059	**318ML4**		**IEC200L4**				**N320TC**	84,400	88,800	38,000
1.7	1,269,600	2.2	1007	**319L4**		**IEC200L4**				**N320TC**	94,900	104,500	37,300
1.8	1,210,100	1.0	953		**317MR4**	**IEC200L4**					81,500	86,500	27,500
1.9	1,147,100	1.2	904	**317ML4**		**IEC200L4**					80,800	85,900	27,000
1.9	1,156,400	2.1	911	**318ML4**		**IEC200L4**				**N320TC**	82,600	86,900	36,100
1.9	1,157,300	2.4	912	**319L4**		**IEC200L4**				**N320TC**	93,600	103,000	36,100
1.9	1,150,500	2.4	906		**319R4C**	**IEC200L4**				**N320TC**	93,500	102,900	36,000
2.0	1,117,000	0.9	880	**316ML4**		**IEC200L4**					51,800	58,100	26,800
2.2	995,200	1.0	784	**316ML4**		**IEC200L4**					50,900	57,100	25,800
2.2	1,005,300	1.7	792	**317ML4**		**IEC200L4**					79,300	84,300	25,800
2.2	1,019,600	1.4	803		**317MR4**	**IEC200L4**					79,500	84,500	26,000
2.2	1,018,100	2.7	802	**319L4**		**IEC200L4**				**N320TC**	91,900	101,200	34,600
2.3	992,900	1.0	782		**316MR4**	**IEC200L4**					50,900	57,100	25,700
2.3	974,400	2.4	768	**318ML4**		**IEC200L4**				**N320TC**	80,600	84,800	34,100
2.3	989,600	2.8	780		**319R4C**	**IEC200L4**				**N320TC**	91,500	100,700	34,300
2.4	912,700	1.6	719	**317ML4**		**IEC200L4**					78,200	83,100	25,000
2.4	921,500	2.5	726	**318ML4**		**IEC200L4**				**N320TC**	79,900	84,200	33,500
2.5	896,700	1.1	706	**316ML4**		**IEC200L4**					50,200	56,300	24,900
2.5	877,400	2.6	691		**318MR4C**	**IEC200L4**				**N320TC**	79,400	83,600	32,900
2.6	852,600	1.0	672	**315ML4**		**IEC200L4**					32,000	39,000	14,700
2.6	859,100	1.6	677		**317MR4**	**IEC200L4**					77,600	82,400	24,500
2.7	836,600	1.2	659		**316MR4**	**IEC200L4**					49,700	55,700	24,300
2.7	821,000	2.8	647	**318ML4**		**IEC200L4**				**N320TC**	78,600	82,800	32,200
2.8	791,200	1.1	623		**315MR4**	**IEC200L4**					31,600	38,600	14,300
2.8	797,200	1.2	628	**316ML4**		**IEC200L4**					49,300	55,300	23,900
2.8	791,200	1.3	623		**316MR4**	**IEC200L4**					49,300	55,300	23,900
2.8	785,200	1.9	619	**317ML4**		**IEC200L4**					76,600	81,400	23,800
2.8	794,500	1.4	626		**317MR4**	**IEC200L4**					76,700	81,500	23,900

The technical information shall be considered as indicative, the configurations should be matching the data provided by motors manufacturers on rated powers greater than 30 HP.

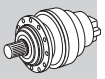

A

P_1 = 40 hp

n_2 rpm	T_2 lb•in	S	i			IE2	IE3	IE2	IE3	NEMA	Rn_2 [lbs] NHC/HC NPC/PC	HZ/PZ	FZ
2.9	776,500	2.9	612	**318ML4**		**IEC200L4**				**N320TC**	78,000	82,100	31,600
3.0	750,000	1.1	591	**315ML4**		**IEC200L4**					31,400	38,300	14,100
3.0	754,800	3.0	595		**318MR4C**	**IEC200L4**				**N320TC**	77,700	81,800	31,300
3.1	714,500	1.4	563	**316ML4**		**IEC200L4**					48,600	54,500	23,100
3.2	700,200	2.4	552	**317ML4**		**IEC200L4**					75,300	80,000	22,900
3.3	677,100	1.2	533	**315ML4**		**IEC200L4**					30,900	37,800	13,600
3.4	666,700	1.3	525		**315MR4**	**IEC200L4**					30,900	37,700	13,500
3.4	666,700	1.7	525		**316MR4**	**IEC200L4**					48,100	53,900	22,500
3.4	660,000	2.2	520		**317MR4**	**IEC200L4**					74,700	79,400	22,500
3.5	635,300	1.7	500	**316ML4**		**IEC200L4**					47,800	53,600	22,200
3.6	627,800	1.1	495	**314ML4**		**IEC200L4**					30,600	37,400	13,300
3.6	617,900	1.4	487	**315ML4**		**IEC200L4**					30,500	37,300	13,200
3.6	625,700	2.4	493	**317ML4**		**IEC200L4**					74,100	78,800	22,100
3.8	581,500	1.1	458	**314ML4**		**IEC200L4**					30,300	37,000	12,900
3.9	567,500	1.9	447	**316ML4**		**IEC200L4**					47,000	52,700	21,400
3.9	569,700	2.8	449	**317ML4**		**IEC200L4**					73,200	77,700	21,400
4.0	559,800	1.5	441	**315ML4**		**IEC200L4**					30,100	36,800	12,800
4.0	561,700	2.0	443		**316MR4**	**IEC200L4**					46,900	52,600	21,300
4.0	556,100	2.4	438		**317MR4**	**IEC200L4**					72,900	77,400	21,200
4.1	546,400	1.7	430		**316MR4**	**IEC200L4**					46,700	52,400	21,100
4.3	427,500	1.6	409		**315MR4**	**IEC200L4**					29,800	36,400	12,400
4.4	506,400	1.8	399	**316ML4**		**IEC200L4**					46,200	51,900	20,600
4.4	506,400	2.5	399		**317MR4**	**IEC200L4**					71,900	76,400	20,600
4.5	500,200	1.3	394	**314ML4**		**IEC200L4**					29,600	36,200	12,300
4.8	469,100	1.8	370	**315ML4**		**IEC200L4**					29,400	35,800	12,000
4.9	460,400	1.9	363		**316MR4**	**IEC200L4**					45,600	51,200	19,900
5.1	437,700	1.9	345		**315MR4**	**IEC200L4**					29,200	35,600	11,800
5.1	438,700	2.0	346	**316ML4**		**IEC200L4**					45,400	50,900	19,600
5.2	428,000	2.1	337		**316MR4**	**IEC200L4**					45,400	50,900	19,400
5.2	426,700	2.5	336		**317MR4**	**IEC200L4**					70,700	75,100	19,400
5.5	403,600	2.7	318	**316ML4**		**IEC200L4**					45,400	50,900	19,100
5.6	398,600	1.6	314	**314ML4**		**IEC200L4**					29,200	35,600	11,400
5.8	383,700	2.2	302	**315ML4**		**IEC200L4**					29,200	35,600	11,200
6.1	366,800	2.5	289		**316MR4**	**IEC200L4**					45,400	50,900	18,500
6.6	341,100	2.3	269		**315MR4**	**IEC200L4**					29,200	35,600	10,800
6.6	341,100	2.5	269		**316MR4**	**IEC200L4**					45,400	50,900	18,000
6.7	332,500	2.5	262		**317MR4**	**IEC200L4**					70,700	75,100	17,900
7.0	330,200	1.1	252	**313ML3**		**IEC200L4**					29,900	37,400	9,410
7.2	321,000	1.0	237	**311ML3**		**IEC200L4**					21,500	22,500	7,580
7.3	313,400	1.3	240	**314ML3**		**IEC200L4**				**N320TC**	29,200	35,600	10,400
7.3	315,000	1.7	241	**315ML3**		**IEC200L4**				**N320TC**	29,200	35,600	10,400
7.8	285,900	2.5	225		**315MR4**	**IEC200L4**					29,200	35,600	10,200
7.8	285,900	2.5	225		**316MR4**	**IEC200L4**					45,400	50,900	17,000
8.0	278,600	2.5	220		**317MR4**	**IEC200L4**					70,700	75,100	16,800
8.4	273,000	1.4	209	**313ML3**		**IEC200L4**					29,900	37,400	8,830
8.5	269,600	2.0	206	**314ML3**		**IEC200L4**				**N320TC**	29,200	35,600	9,900
8.5	271,000	2.5	207	**315ML3**		**IEC200L4**				**N320TC**	29,200	35,600	9,910
8.7	265,400	1.2	203	**311ML3**		**IEC200L4**					21,500	22,500	7,110

The technical information shall be considered as indicative, the configurations should be matching the data provided by motors manufacturers on rated powers greater than 30 HP.

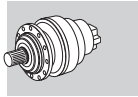

A

P_1 = 40 hp

n_2 rpm	T_2 lb•in	S	i			IE2	IE3	IE2	IE3	NEMA	Rn_2 [lbs] NHC/HC NPC/PC	HZ/PZ	FZ
9.1	253,300	1.7	194	**313ML3**		**IEC200L4**					29,900	37,400	8,620
9.2	250,200	1.1	191	**311ML3**		**IEC200L4**					21,500	22,500	6,970
9.7	238,200	1.1	182	**313ML3**		**IEC200L4**					29,900	37,400	8,440
10.0	230,000	1.6	176	**313ML3**		**IEC200L4**					29,900	37,400	8,340
10.1	227,200	2.3	174	**314ML3**		**IEC200L4**				**N320TC**	29,000	35,400	9,350
10.1	228,300	2.9	174	**315ML3**		**IEC200L4**				**N320TC**	29,100	35,500	9,360
10.3	223,600	1.4	171	**311ML3**		**IEC200L4**					21,300	22,500	6,720
10.7	214,800	2.4	164	**314ML3**		**IEC200L4**				**N320TC**	28,600	34,900	9,180
10.8	214,100	1.1	164	**310ML3**		**IEC200L4**					16,800	21,800	6,620
10.8	213,500	2.1	163	**313ML3**		**IEC200L4**					29,200	36,600	8,140
10.9	210,800	1.5	161	**311ML3**		**IEC200L4**					21,000	22,500	6,590
11.2	205,600	2.0	157		**314MR3C**	**IEC200L4**				**N320TC**	28,200	34,400	9,040
11.2	205,600	2.6	157		**315MR3C**	**IEC200L4**				**N320TC**	28,200	34,400	9,040
11.5	200,200	1.3	153		**313MR3**	**IEC200L4**					28,600	35,900	7,970
11.6	197,900	1.8	151	**313ML3**		**IEC200L4**					28,500	35,700	7,940
11.8	195,400	1.0	149	**310ML3**		**IEC200L4**					16,400	21,200	6,429
12.0	192,400	1.6	147	**311ML3**		**IEC200L4**					20,400	22,500	6,390
12.0	191,900	1.3	147		**311MR3**	**IEC200L4**					20,400	22,500	6,380
12.3	187,100	2.0	143	**313ML3**		**IEC200L4**					28,100	35,100	7,790
13.0	177,000	1.2	135	**310ML3**		**IEC200L4**					15,900	20,500	6,210
13.0	176,800	2.9	135		**314MR3C**	**IEC200L4**				**N320TC**	26,900	32,900	8,600
13.1	176,500	2.4	135	**313ML3**		**IEC200L4**					27,600	34,500	7,640
13.2	174,300	1.7	133	**311ML3**		**IEC200L4**					19,800	22,500	6,180
13.8	166,300	2.1	127		**313MR3**	**IEC200L4**					27,100	33,900	7,490
14.2	161,700	1.8	124		**311MR3**	**IEC200L4**					19,400	22,500	6,030
14.6	157,700	2.3	120	**313ML3**		**IEC200L4**					26,700	33,400	7,360
14.8	155,700	1.2	119	**310ML3**		**IEC200L4**					15,300	19,800	5,950
15.4	149,900	2.0	115	**311ML3**		**IEC200L4**					18,900	22,500	5,880
15.5	148,500	2.8	113		**314MR3B**	**IEC200L4**				**N320TC**	25,600	31,200	8,110
16.0	143,600	2.7	110	**313ML3**		**IEC200L4**					25,900	32,500	7,130
16.3	141,100	1.5	108	**310ML3**		**IEC200L4**					14,900	19,200	5,760
16.4	140,200	2.3	107		**313MR3**	**IEC200L4**					25,700	32,200	7,070
16.9	136,300	2.1	104		**311MR3**	**IEC200L4**					18,400	22,500	5,690
17.0	135,800	2.2	104	**311ML3**		**IEC200L4**					18,400	22,500	5,690
17.5	131,900	1.4	101	**310ML3**		**IEC200L4**					14,600	18,800	5,630
18.0	127,600	2.5	97.5		**313MR3**	**IEC200L4**					25,000	31,300	6,860
18.3	126,000	2.0	96.3		**311MR3**	**IEC200L4**					18,000	22,500	5,550
19.0	121,300	1.6	92.7	**310ML3**		**IEC200L4**					14,200	18,300	5,480
19.7	116,800	2.5	89.3	**311ML3**		**IEC200L4**					17,600	22,500	5,410
21.4	107,500	2.5	82.2		**313MR3**	**IEC200L4**					23,800	29,800	6,480
21.7	106,200	2.4	81.1		**311MR3**	**IEC200L4**					17,100	22,300	5,240
21.9	105,100	1.7	80.3	**310ML3**		**IEC200L4**					13,600	17,600	5,220
22.8	101,200	2.8	77.3	**311ML3**		**IEC200L4**					16,800	22,000	5,160
23.8	96,700	2.0	73.9	**310ML3**		**IEC200L4**					13,300	17,100	5,080
24.7	93,100	2.9	71.1	**311ML3**		**IEC200L4**					16,400	21,400	5,010
25.2	91,500	2.5	69.9		**313MR3**	**IEC200L4**					22,700	28,400	6,140
25.9	89,000	2.5	68.0		**311MR3**	**IEC200L4**					16,200	21,100	4,940
27.5	83,800	2.5	64.0		**313MR3**	**IEC200L4**					22,100	27,600	5,960

The technical information shall be considered as indicative, the configurations should be matching the data provided by motors manufacturers on rated powers greater than 30 HP.

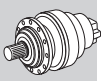

A

P_1 = 40 hp

n_2 rpm	T_2 lb•in	S	i			IE2	IE3	IE2	IE3	NEMA	Rn_2 [lbs] NHC/HC NPC/PC	HZ/PZ	FZ
27.8	82,700	2.5	63.2		**311MR3**	**IEC200L4**					15,800	20,700	4,820
28.1	81,900	2.0	62.6	**310ML3**		**IEC200L4**					12,600	16,300	4,810
33	69,400	2.3	53.0	**310ML3**		**IEC200L4**					12,000	15,500	4,550
33	69,300	2.5	53.0		**311MR3**	**IEC200L4**					15,000	19,600	4,550
33	70,200	2.5	53.7		**313MR3**	**IEC200L4**					20,900	26,200	5,620
38	62,700	0.9	46.5	**306L2**		**IEC200L4**					7,870	9,920	2,340
38	63,000	1.2	46.7	**307L2**		**IEC200L4**					9,860	13,400	3,020
38	63,000	1.8	46.7	**309L2**		**IEC200L4**					9,860	13,400	2,410
38	63,000	2.5	46.7	**310ML2**		**IEC200L4**				**N320TC**	11,600	14,900	4,360
46	51,900	1.1	38.4	**306L2**		**IEC200L4**					7,430	9,370	2,200
46	52,100	1.4	38.6	**307L2**		**IEC200L4**					9,310	12,700	2,830
46	52,100	2.1	38.6	**309L2**		**IEC200L4**					9,310	12,700	2,270
53	44,600	1.3	33.1	**306L2**		**IEC200L4**					7,110	8,960	2,090
54	43,900	1.8	32.6	**307L2**		**IEC200L4**					8,850	12,000	2,680
54	43,900	2.5	32.6	**309L2**		**IEC200L4**					8,850	12,000	2,140
57	41,400	2.0	30.7	**307L2**		**IEC200L4**					8,690	11,800	2,620
62	38,400	1.5	28.4	**306L2**		**IEC200L4**					6,790	8,560	1,990
63	37,800	2.0	28.0	**307L2**		**IEC200L4**					8,460	11,500	2,540
63	37,800	2.8	28.0	**309L2**		**IEC200L4**					8,460	11,500	2,040
67	35,500	1.5	26.4	**306L2**		**IEC200L4**					6,640	8,370	1,940
69	34,200	2.2	25.4	**307L2**		**IEC200L4**					8,210	11,200	2,460
69	34,200	2.6	25.4	**309L2**		**IEC200L4**					8,210	11,200	1,970
75	31,800	2.2	23.5		**307R2**	**IEC200L4**					8,030	10,900	2,400
75	31,800	2.5	23.5		**309R2**	**IEC200L4**					8,030	10,900	1,920
78	30,600	1.7	22.7	**306L2**		**IEC200L4**					6,350	8,000	1,840
81	29,400	2.5	21.8	**307L2**		**IEC200L4**					7,850	10,700	2,340
81	29,400	2.9	21.8	**309L2**		**IEC200L4**					7,850	10,700	1,870
89	26,800	2.5	19.8		**307R2**	**IEC200L4**					7,630	10,400	2,270
89	26,800	2.5	19.8		**309R2**	**IEC200L4**					7,630	10,400	1,810
97	24,400	2.0	18.1	**306L2**		**IEC200L4**					5,930	7,470	1,710
101	23,500	2.9	17.4	**307L2**		**IEC200L4**					7,330	9,970	2,170
114	20,800	2.5	15.5		**307R2**	**IEC200L4**					7,080	9,620	2,090
114	20,800	2.5	15.5		**309R2**	**IEC200L4**					7,080	9,620	1,670
115	20,600	2.0	15.3	**306L2**		**IEC200L4**					5,640	7,110	1,620
136	17,500	2.3	13.0	**306L2**		**IEC200L4**					5,370	6,760	1,530
136	17,500	2.5	13.0		**307R2**	**IEC200L4**					6,710	9,130	1,970
136	17,500	2.5	13.0		**309R2**	**IEC200L4**					6,710	9,130	1,570
235	10,400	1.0	7.50	**303L1**		**IEC200L4**					3,310	4,190	870
235	10,400	1.8	7.50	**305L1**		**IEC200L4**					3,310	4,190	870
268	9,140	1.7	6.57	**304L1**		**IEC200L4**					3,190	4,020	840
284	8,620	1.4	6.20	**303L1**		**IEC200L4**					3,130	3,950	820
284	8,620	2.6	6.20	**305L1**		**IEC200L4**					3,130	3,950	820
330	7,429	1.7	5.33	**303L1**		**IEC200L4**					2,990	3,780	780
330	7,429	2.3	5.33	**304L1**		**IEC200L4**					2,990	3,780	780
330	7,429	2.9	5.33	**305L1**		**IEC200L4**					2,990	3,780	780
414	5,910	2.0	4.25	**303L1**		**IEC200L4**					2,800	3,530	720
414	5,910	2.7	4.25	**304L1**		**IEC200L4**					2,800	3,530	720
489	5,010	2.3	3.60	**303L1**		**IEC200L4**					2,660	3,360	680

The technical information shall be considered as indicative, the configurations should be matching the data provided by motors manufacturers on rated powers greater than 30 HP.

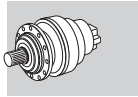

A

P_1 = 50 hp

n_2 rpm	T_2 lb•in	S	i			IE2	IE3	IE2	IE3	NEMA	Rn_2 [lbs] NHC/HC NPC/PC	HZ/PZ	FZ
1.3	2,170,700	1.3	1389	**319L4**		**IEC225S4**				**N320TC**	99,300	109,400	41,500
1.5	1,867,300	1.6	1195	**319L4**		**IEC225S4**				**N320TC**	97,200	107,000	39,500
1.6	1,753,200	2.7	1122	**321L4**		**IEC225S4**				**N320TC**	136,300	162,200	235,500
1.7	1,655,500	1.4	1059	**318ML4**		**IEC225S4**				**N320TC**	84,300	88,800	37,900
1.8	1,573,400	1.8	1007	**319L4**		**IEC225S4**				**N320TC**	94,900	104,400	37,300
1.9	1,424,100	1.7	911	**318ML4**		**IEC225S4**				**N320TC**	82,500	86,900	36,100
1.9	1,425,200	2.0	912	**319L4**		**IEC225S4**				**N320TC**	93,500	103,000	36,100
1.9	1,416,800	2.0	906		**319R4C**	**IEC225S4**				**N320TC**	93,500	102,900	36,000
2.1	1,329,500	2.6	850	**319L4**		**IEC225S4**				**N320TC**	92,600	102,000	35,200
2.2	1,253,800	2.2	802	**319L4**		**IEC225S4**				**N320TC**	91,800	101,100	34,600
2.3	1,199,900	1.9	768	**318ML4**		**IEC225S4**				**N320TC**	80,500	84,800	34,100
2.3	1,218,700	2.3	780		**319R4C**	**IEC225S4**				**N320TC**	91,500	100,700	34,200
2.4	1,134,800	2.0	726	**318ML4**		**IEC225S4**				**N320TC**	79,900	84,100	33,400
2.6	1,080,500	2.1	691		**318MR4C**	**IEC225S4**				**N320TC**	79,300	83,500	32,900
2.7	1,011,100	2.2	647	**318ML4**		**IEC225S4**				**N320TC**	78,600	82,800	32,200
2.7	1,023,400	2.6	655		**319R4B**	**IEC225S4**				**N320TC**	89,200	98,200	32,300
2.7	1,026,900	2.6	657		**319R4C**	**IEC225S4**				**N320TC**	89,300	98,300	32,300
2.8	977,000	2.7	625	**319L4**		**IEC225S4**				**N320TC**	88,600	97,600	31,800
2.9	956,200	2.4	612	**318ML4**		**IEC225S4**				**N320TC**	78,000	82,100	31,600
3.0	929,500	2.4	595		**318MR4C**	**IEC225S4**				**N320TC**	77,600	81,800	31,300
3.1	880,300	3.0	563		**319R4B**	**IEC225S4**				**N320TC**	87,300	96,100	30,700
3.4	805,700	2.7	515	**318ML4**		**IEC225S4**				**N320TC**	76,100	80,100	29,800
3.5	780,500	2.8	499		**318MR4B**	**IEC225S4**				**N320TC**	75,700	79,700	29,500
3.5	783,200	2.8	501		**318MR4C**	**IEC225S4**				**N320TC**	75,800	79,800	29,500
3.7	745,100	2.9	477	**318ML4**		**IEC225S4**				**N320TC**	75,200	79,200	29,100
3.7	740,700	2.9	474		**318MR4C**	**IEC225S4**				**N320TC**	75,200	79,200	29,000
7.0	406,700	2.5	252	**317ML3**		**IEC225S4**				**N320TC**	70,700	75,100	17,600
7.3	387,900	1.4	241	**315ML3**		**IEC225S4**				**N320TC**	29,200	35,600	10,400
7.4	386,000	1.1	240	**314ML3**		**IEC225S4**				**N320TC**	29,200	35,600	10,400
8.5	333,700	2.0	207	**315ML3**		**IEC225S4**				**N320TC**	29,200	35,600	9,900
8.5	333,700	2.6	207	**316ML3**		**IEC225S4**				**N320TC**	45,400	50,900	16,500
8.6	332,000	1.6	206	**314ML3**		**IEC225S4**				**N320TC**	29,200	35,600	9,890
10.1	281,100	2.3	174	**315ML3**		**IEC225S4**				**N320TC**	29,100	35,500	9,350
10.2	279,800	1.9	174	**314ML3**		**IEC225S4**				**N320TC**	29,000	35,400	9,340
10.7	265,900	2.9	165	**315ML3**		**IEC225S4**				**N320TC**	28,600	34,900	9,180
10.8	264,600	2.0	164	**314ML3**		**IEC225S4**				**N320TC**	28,500	34,800	9,170
11.2	253,200	1.7	157		**314MR3C**	**IEC225S4**				**N320TC**	28,200	34,400	9,030
11.2	253,200	2.1	157		**315MR3C**	**IEC225S4**				**N320TC**	28,200	34,400	9,030
12.8	222,900	2.6	138	**314ML3**		**IEC225S4**				**N320TC**	27,100	33,100	8,660
13.1	217,800	2.4	135		**314MR3C**	**IEC225S4**				**N320TC**	26,900	32,800	8,590
13.1	217,800	3.0	135		**315MR3C**	**IEC225S4**				**N320TC**	26,900	32,800	8,590
15.5	183,500	2.8	114		**314MR3C**	**IEC225S4**				**N320TC**	25,600	31,200	8,110
15.6	182,900	2.3	113		**314MR3B**	**IEC225S4**				**N320TC**	25,500	31,200	8,110
15.6	182,900	2.9	113		**315MR3B**	**IEC225S4**				**N320TC**	25,500	31,200	8,110
16.4	173,700	2.7	108	**314ML3**		**IEC225S4**				**N320TC**	25,100	30,700	7,970
16.4	173,500	2.8	108		**314MR3C**	**IEC225S4**				**N320TC**	25,100	30,700	7,970
19	149,400	3.0	92.7	**314ML3**		**IEC225S4**				**N320TC**	24,000	29,300	7,580
38	77,600	2.0	46.7	**310ML2**		**IEC225S4**				**N320TC**	11,600	14,900	4,360
46	64,200	2.5	38.6	**310ML2**		**IEC225S4**				**N320TC**	10,900	14,100	4,090
58	51,000	2.8	30.7	**310ML2**		**IEC225S4**				**N320TC**	10,200	13,200	3,790
235	12,800	2.7	7.50	**306L1**		**IEC225S4**				**N320TC**	4,550	5,740	1,270

The technical information shall be considered as indicative, the configurations should be matching the data provided by motors manufacturers on rated powers greater than 30 HP.

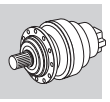

A

P_1 = 60 hp

n_2 rpm	T_2 lb•in	S	i			IE2	IE3	IE2	IE3	NEMA	Rn_2 [lbs] NHC/HC NPC/PC	HZ/PZ	FZ
1.3	2,633,100	1.1	1389	**319L4**		**IEC225M4**				**N360TC**	99,300	109,300	41,500
1.5	2,265,100	1.3	1195	**319L4**		**IEC225M4**				**N360TC**	97,200	107,000	39,400
1.6	2,126,700	2.2	1122	**321L4**		**IEC225M4**				**N360TC**	136,200	162,100	235,300
1.7	2,008,200	1.1	1059	**318ML4**		**IEC225M4**				**N360TC**	84,300	88,800	37,900
1.8	1,908,500	1.5	1007	**319L4**		**IEC225M4**				**N360TC**	94,800	104,400	37,200
1.9	1,727,500	1.4	911	**318ML4**		**IEC225M4**				**N360TC**	82,500	86,900	36,000
1.9	1,728,800	1.6	912	**319L4**		**IEC225M4**				**N360TC**	93,500	102,900	36,000
1.9	1,791,900	2.8	945	**321L4**		**IEC225M4**				**N360TC**	132,900	158,200	223,500
2.0	1,718,600	1.6	906		**319R4C**	**IEC225M4**				**N360TC**	93,400	102,800	36,000
2.1	1,612,700	2.2	850	**319L4**		**IEC225M4**				**N360TC**	92,600	101,900	35,200
2.2	1,520,900	1.8	802	**319L4**		**IEC225M4**				**N360TC**	91,800	101,100	34,500
2.3	1,455,600	1.6	768	**318ML4**		**IEC225M4**				**N360TC**	80,500	84,800	34,000
2.3	1,478,400	1.9	780		**319R4C**	**IEC225M4**				**N360TC**	91,400	100,700	34,200
2.4	1,376,600	1.7	726	**318ML4**		**IEC225M4**				**N360TC**	79,900	84,100	33,400
2.5	1,358,900	2.5	717	**319L4**		**IEC225M4**				**N360TC**	90,300	99,500	33,300
2.6	1,310,700	1.7	691		**318MR4C**	**IEC225M4**				**N360TC**	79,300	83,500	32,900
2.6	1,285,100	2.6	678	**319L4**		**IEC225M4**				**N360TC**	89,600	98,700	32,600
2.7	1,226,500	1.9	647	**318ML4**		**IEC225M4**				**N360TC**	78,600	82,700	32,100
2.7	1,241,400	2.2	655		**319R4B**	**IEC225M4**				**N360TC**	89,200	98,200	32,300
2.7	1,237,700	2.1	657		**319R4C**	**IEC225M4**				**N360TC**	89,200	98,200	32,300
2.8	1,185,100	2.2	625	**319L4**		**IEC225M4**				**N360TC**	88,600	97,500	31,800
2.9	1,159,900	1.9	612	**318ML4**		**IEC225M4**				**N360TC**	77,900	82,100	31,600
3.0	1,127,500	2.0	595		**318MR4C**	**IEC225M4**				**N360TC**	77,600	81,700	31,300
3.1	1,082,800	2.9	571	**319L4**		**IEC225M4**				**N360TC**	87,400	96,300	30,800
3.1	1,067,900	2.4	563		**319R4B**	**IEC225M4**				**N360TC**	87,300	96,100	30,700
3.2	1,058,900	3.0	558	**319L4**		**IEC225M4**				**N360TC**	87,200	96,000	30,600
3.2	1,056,100	3.0	555		**319R4C**	**IEC225M4**				**N360TC**	87,100	95,900	30,500
3.4	977,300	2.2	515	**318ML4**		**IEC225M4**				**N360TC**	76,000	80,100	29,800
3.4	976,400	2.6	515	**319L4**		**IEC225M4**				**N360TC**	86,200	94,900	29,800
3.5	946,800	2.3	499		**318MR4B**	**IEC225M4**				**N360TC**	75,700	79,700	29,500
3.5	950,000	2.3	501		**318MR4C**	**IEC225M4**				**N360TC**	75,700	79,800	29,500
3.7	903,800	2.4	477	**318ML4**		**IEC225M4**				**N360TC**	75,200	79,200	29,000
3.7	898,500	2.4	474		**318MR4C**	**IEC225M4**				**N360TC**	75,100	79,100	29,000
3.7	899,800	2.8	475		**319R4B**	**IEC225M4**				**N360TC**	85,200	93,800	29,000
4.1	814,400	2.6	430		**318MR4B**	**IEC225M4**				**N360TC**	74,100	78,000	28,000
4.2	801,000	2.6	422	**318ML4**		**IEC225M4**				**N360TC**	73,900	77,800	27,900
4.4	761,600	2.8	402	**318ML4**		**IEC225M4**				**N360TC**	73,400	77,300	27,400
4.4	757,000	2.8	399		**318MR4C**	**IEC225M4**				**N360TC**	73,300	77,200	27,400
4.9	688,500	3.0	362		**318MR4B**	**IEC225M4**				**N360TC**	72,300	76,100	26,500
7.0	493,300	2.0	252	**317ML3**		**IEC225M4**				**N360TC**	70,700	75,100	17,600
7.4	468,200	0.9	240	**314ML3**		**IEC225M4**				**N360TC**	29,200	35,600	10,400
7.4	470,500	1.1	241	**315ML3**		**IEC225M4**				**N360TC**	29,200	35,600	10,400
8.5	404,800	1.6	207	**315ML3**		**IEC225M4**				**N360TC**	29,200	35,600	9,900
8.5	404,800	2.2	207	**316ML3**		**IEC225M4**				**N360TC**	45,400	50,900	16,500
8.6	402,800	1.3	206	**314ML3**		**IEC225M4**				**N360TC**	29,200	35,600	9,880
10.1	341,000	1.9	174	**315ML3**		**IEC225M4**				**N360TC**	29,000	35,400	9,350
10.1	341,000	2.6	174	**316ML3**		**IEC225M4**				**N360TC**	45,200	50,700	15,600
10.2	339,400	1.6	174	**314ML3**		**IEC225M4**				**N360TC**	29,000	35,400	9,330
10.7	322,500	2.4	165	**315ML3**		**IEC225M4**				**N360TC**	28,500	34,800	9,170
10.8	320,900	1.6	164	**314ML3**		**IEC225M4**				**N360TC**	28,500	34,800	9,160
11.3	307,100	1.4	157		**314MR3C**	**IEC225M4**				**N360TC**	28,100	34,300	9,030

The technical information shall be considered as indicative, the configurations should be matching the data provided by motors manufacturers on rated powers greater than 30 HP.

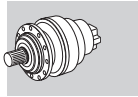

A

P_1 = 60 hp

n_2 rpm	T_2 lb•in	S	i			IE2	IE3	IE2	IE3	NEMA	Rn_2 [lbs] NHC/HC NPC/PC	HZ/PZ	FZ
11.3	307,100	1.7	157		**315MR3C**	**IEC225M4**				**N360TC**	28,100	34,300	9,030
12.7	271,800	2.8	139	**315ML3**		**IEC225M4**				**N360TC**	27,100	33,100	8,660
12.8	270,400	2.2	138	**314ML3**		**IEC225M4**				**N360TC**	27,100	33,100	8,650
13.1	264,200	2.0	135		**314MR3C**	**IEC225M4**				**N360TC**	26,900	32,800	8,580
13.1	264,200	2.4	135		**315MR3C**	**IEC225M4**				**N360TC**	26,900	32,800	8,580
15.5	222,600	2.3	114		**314MR3C**	**IEC225M4**				**N360TC**	25,500	31,200	8,110
15.5	222,600	2.9	114		**315MR3C**	**IEC225M4**				**N360TC**	25,500	31,200	8,110
15.6	221,800	1.9	113		**314MR3B**	**IEC225M4**				**N360TC**	25,500	31,100	8,100
15.6	221,800	2.4	113		**315MR3B**	**IEC225M4**				**N360TC**	25,500	31,100	8,100
16.4	210,700	2.2	108	**314ML3**		**IEC225M4**				**N360TC**	25,100	30,700	7,960
16.4	210,500	2.3	108		**314MR3C**	**IEC225M4**				**N360TC**	25,100	30,700	7,960
18.1	190,800	2.6	97.6		**314MR3B**	**IEC225M4**				**N360TC**	24,400	29,800	7,700
19.1	181,300	2.5	92.7	**314ML3**		**IEC225M4**				**N360TC**	24,000	29,300	7,570
19.5	177,400	2.9	90.7		**314MR3C**	**IEC225M4**				**N360TC**	23,900	29,100	7,520
21.5	160,800	2.9	82.3		**314MR3B**	**IEC225M4**				**N360TC**	23,200	28,300	7,270
22.8	152,100	3.0	77.8		**314MR3B**	**IEC225M4**				**N360TC**	22,800	27,800	7,140
24	144,400	3.0	73.9	**314ML3**		**IEC225M4**				**N360TC**	22,400	27,400	7,020
25	138,700	3.0	70.7		**314MR3C**	**IEC225M4**				**N360TC**	22,100	27,000	6,920
38	94,200	1.7	46.7	**310ML2**		**IEC225M4**				**N360TC**	11,500	14,900	4,350
46	77,900	2.0	38.6	**310ML2**		**IEC225M4**				**N360TC**	10,900	14,100	4,080
54	65,600	2.7	32.6	**310ML2**		**IEC225M4**				**N360TC**	10,400	13,400	3,860
58	61,800	2.3	30.7	**310ML2**		**IEC225M4**				**N360TC**	10,200	13,100	3,780
70	51,100	2.7	25.4	**310ML2**		**IEC225M4**				**N360TC**	9,610	12,400	3,550
70	51,100	3.0	25.3		**310MR2C**	**IEC225M4**				**N360TC**	9,610	12,400	3,550
236	15,600	2.2	7.50	**306L1**		**IEC225M4**				**N360TC**	4,550	5,730	1,270
285	12,900	2.7	6.20	**306L1**		**IEC225M4**				**N360TC**	4,290	5,410	1,190

P_1 = 75 hp

n_2 rpm	T_2 lb•in	S	i			IE2	IE3	IE2	IE3	NEMA	Rn_2 [lbs] NHC/HC NPC/PC	HZ/PZ	FZ
1.3	3,209,800	0.9	1389	**319L4**		**IEC250M4**				**N360TC**	99,300	109,300	41,500
1.4	2,957,400	2.6	1279	**323L4**		**IEC250M4**					—	—	224,300
1.4	2,957,400	2.9	1279	**325L4**		**IEC250M4**					—	—	285,500
1.5	2,761,100	1.1	1195	**319L4**		**IEC250M4**				**N360TC**	97,200	107,000	39,400
1.6	2,592,400	1.8	1122	**321L4**		**IEC250M4**				**N360TC**	136,200	162,100	235,300
1.6	2,544,000	3.0	1101	**323L4**		**IEC250M4**					—	—	214,400
1.7	2,448,000	0.9	1059	**318ML4**		**IEC250M4**				**N360TC**	84,300	88,800	37,900
1.8	2,326,500	1.2	1007	**319L4**		**IEC250M4**				**N360TC**	94,800	104,400	37,200
1.9	2,105,800	1.1	911	**318ML4**		**IEC250M4**				**N360TC**	82,500	86,900	36,000
1.9	2,107,500	1.3	912	**319L4**		**IEC250M4**				**N360TC**	93,500	102,900	36,000
1.9	2,184,300	2.3	945	**321L4**		**IEC250M4**				**N360TC**	132,900	158,200	223,500
2.0	2,095,000	1.3	906		**319R4C**	**IEC250M4**				**N360TC**	93,400	102,800	36,000
2.1	1,965,900	1.8	850	**319L4**		**IEC250M4**				**N360TC**	92,600	101,900	35,200
2.2	1,853,900	1.5	802	**319L4**		**IEC250M4**				**N360TC**	91,800	101,100	34,500
2.2	1,840,500	2.6	796	**321L4**		**IEC250M4**				**N360TC**	129,700	154,400	212,300
2.3	1,774,400	1.3	768	**318ML4**		**IEC250M4**				**N360TC**	80,500	84,800	34,000

The technical information shall be considered as indicative, the configurations should be matching the data provided by motors manufacturers on rated powers greater than 30 HP.

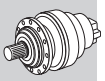

A

P_1 = 75 hp

n_2 rpm	T_2 lb•in	S	i			IE2	IE3	IE2	IE3	NEMA	Rn_2 [lbs] NHC/HC NPC/PC	HZ/PZ	FZ
2.3	1,802,100	1.5	780		**319R4C**	**IEC250M4**				**N360TC**	91,400	100,700	34,200
2.4	1,678,100	1.4	726	**318ML4**		**IEC250M4**				**N360TC**	79,900	84,100	33,400
2.4	1,702,100	2.7	736	**321L4**		**IEC250M4**				**N360TC**	128,300	152,700	207,400
2.4	1,692,000	2.7	732		**321R4C**	**IEC250M4**				**N360TC**	128,200	152,600	207,000
2.5	1,656,500	2.1	717	**319L4**		**IEC250M4**				**N360TC**	90,300	99,500	33,300
2.6	1,597,800	1.4	691		**318MR4C**	**IEC250M4**				**N360TC**	79,300	83,500	32,900
2.6	1,566,600	2.1	678	**319L4**		**IEC250M4**				**N360TC**	89,600	98,700	32,600
2.7	1,495,100	1.5	647	**318ML4**		**IEC250M4**				**N360TC**	78,600	82,700	32,100
2.7	1,513,300	1.8	655		**319R4B**	**IEC250M4**				**N360TC**	89,200	98,200	32,300
2.7	1,518,500	1.8	657		**319R4C**	**IEC250M4**				**N360TC**	89,200	98,200	32,300
2.8	1,444,600	1.8	625	**319L4**		**IEC250M4**				**N360TC**	88,600	97,500	31,800
2.9	1,413,900	1.6	612	**318ML4**		**IEC250M4**				**N360TC**	77,900	82,100	31,600
2.9	1,425,700	3.0	617		**321R4C**	**IEC250M4**				**N360TC**	125,100	148,900	196,600
3.0	1,374,400	1.6	595		**318MR4C**	**IEC250M4**				**N360TC**	77,600	81,700	31,300
3.1	1,320,000	2.4	571	**319L4**		**IEC250M4**				**N360TC**	87,400	96,300	30,800
3.1	1,301,700	2.0	563		**319R4B**	**IEC250M4**				**N360TC**	87,300	96,100	30,700
3.2	1,290,700	2.5	558	**319L4**		**IEC250M4**				**N360TC**	87,200	96,000	30,600
3.2	1,283,100	2.5	555		**319R4C**	**IEC250M4**				**N360TC**	87,100	95,900	30,500
3.4	1,191,400	1.8	515	**318ML4**		**IEC250M4**				**N360TC**	76,000	80,100	29,800
3.4	1,190,300	2.2	515	**319L4**		**IEC250M4**				**N360TC**	86,200	94,900	29,800
3.4	1,220,700	2.5	528	**319L4**		**IEC250M4**				**N360TC**	86,500	95,200	30,000
3.4	1,213,500	2.6	525		**319R4C**	**IEC250M4**				**N360TC**	86,400	95,100	30,000
3.5	1,154,100	1.9	499		**318MR4B**	**IEC250M4**				**N360TC**	75,700	79,700	29,500
3.5	1,158,100	1.9	501		**318MR4C**	**IEC250M4**				**N360TC**	75,700	79,800	29,500
3.5	1,184,400	3.0	512		**321R4C**	**IEC250M4**				**N360TC**	121,800	145,000	186,000
3.7	1,101,800	2.0	477	**318ML4**		**IEC250M4**				**N360TC**	75,200	79,200	29,000
3.7	1,095,200	2.0	474		**318MR4C**	**IEC250M4**				**N360TC**	75,100	79,100	29,000
3.7	1,096,800	2.3	475		**319R4B**	**IEC250M4**				**N360TC**	85,200	93,800	29,000
3.7	1,110,900	3.0	481		**321R4C**	**IEC250M4**				**N360TC**	120,700	143,700	182,400
4.0	1,028,600	2.9	445	**319L4**		**IEC250M4**				**N360TC**	84,400	92,900	28,400
4.0	1,022,500	2.9	442		**319R4C**	**IEC250M4**				**N360TC**	84,300	92,800	28,300
4.1	992,800	2.1	430		**318MR4B**	**IEC250M4**				**N360TC**	74,100	78,000	28,000
4.2	976,400	2.2	422	**318ML4**		**IEC250M4**				**N360TC**	73,900	77,800	27,900
4.3	948,500	2.6	410	**319L4**		**IEC250M4**				**N360TC**	83,400	91,800	27,600
4.4	928,300	2.3	402	**318ML4**		**IEC250M4**				**N360TC**	73,400	77,300	27,400
4.4	922,800	2.3	399		**318MR4C**	**IEC250M4**				**N360TC**	73,300	77,200	27,400
4.4	922,900	3.0	399		**321R4C**	**IEC250M4**				**N360TC**	117,500	139,900	172,600
4.9	836,500	2.5	362		**318MR4B**	**IEC250M4**				**N360TC**	72,300	76,100	26,500
5.2	791,100	2.6	342		**318MR4B**	**IEC250M4**				**N360TC**	72,100	75,900	26,000
5.3	778,000	2.6	337	**318ML4**		**IEC250M4**				**N360TC**	72,100	75,900	25,900
5.7	723,400	2.8	313	**318ML4**		**IEC250M4**				**N360TC**	72,100	75,900	25,200
5.7	719,100	2.8	311		**318MR4C**	**IEC250M4**				**N360TC**	72,100	75,900	25,200
5.8	708,100	3.0	306		**321R4C**	**IEC250M4**				**N360TC**	115,500	137,500	159,400
7.0	601,300	1.7	252	**317ML3**		**IEC250M4**				**N360TC**	70,700	75,100	17,600
7.4	573,600	0.9	241	**315ML3**		**IEC250M4**				**N360TC**	29,200	35,600	10,400
8.3	506,700	2.5	213	**317ML3**		**IEC250M4**				**N360TC**	70,700	75,100	16,600
8.5	493,400	1.4	207	**315ML3**		**IEC250M4**				**N360TC**	29,200	35,600	9,900

The technical information shall be considered as indicative, the configurations should be matching the data provided by motors manufacturers on rated powers greater than 30 HP.

P_1 = 75 hp

n_2 rpm	T_2 lb•in	S	i			IE2	IE3	IE2	IE3	NEMA	Rn_2 [lbs] NHC/HC NPC/PC	HZ/PZ	FZ
8.5	493,400	1.8	207	**316ML3**		**IEC250M4**				**N360TC**	45,400	50,900	16,500
8.6	491,000	1.1	206	**314ML3**		**IEC250M4**				**N360TC**	29,200	35,600	9,880
9.9	426,900	3.0	179	**317ML3**		**IEC250M4**				**N360TC**	70,700	75,100	15,700
10.1	415,700	1.6	174	**315ML3**		**IEC250M4**				**N360TC**	29,000	35,400	9,350
10.1	415,700	2.1	174	**316ML3**		**IEC250M4**				**N360TC**	45,200	50,700	15,600
10.2	413,700	1.3	174	**314ML3**		**IEC250M4**				**N360TC**	29,000	35,400	9,330
10.7	393,200	2.0	165	**315ML3**		**IEC250M4**				**N360TC**	28,500	34,800	9,170
10.7	393,200	2.5	165	**316ML3**		**IEC250M4**				**N360TC**	44,500	49,900	15,300
10.7	394,800	2.7	166	**317ML3**		**IEC250M4**				**N360TC**	69,300	73,600	15,300
10.7	392,500	2.5	165		**317MR3C**	**IEC250M4**					69,100	73,500	15,300
10.8	391,200	1.3	164	**314ML3**		**IEC250M4**				**N360TC**	28,500	34,800	9,160
11.3	374,400	1.1	157		**314MR3C**	**IEC250M4**				**N360TC**	28,100	34,300	9,030
11.3	374,400	1.4	157		**315MR3C**	**IEC250M4**				**N360TC**	28,100	34,300	9,030
12.7	321,300	2.3	139	**315ML3**		**IEC250M4**				**N360TC**	27,100	33,100	8,660
12.7	321,300	3.0	139	**316ML3**		**IEC250M4**				**N360TC**	42,200	47,400	14,400
12.8	329,700	1.8	138	**314ML3**		**IEC250M4**				**N360TC**	27,100	33,100	8,650
13.1	322,000	1.6	135		**314MR3C**	**IEC250M4**				**N360TC**	26,900	32,800	8,580
13.1	322,000	2.0	135		**315MR3C**	**IEC250M4**				**N360TC**	26,900	32,800	8,580
13.1	322,000	2.6	135		**316MR3C**	**IEC250M4**				**N360TC**	41,900	47,000	14,300
15.5	271,300	1.9	114		**314MR3C**	**IEC250M4**				**N360TC**	25,500	31,200	8,110
15.5	271,300	2.3	114		**315MR3C**	**IEC250M4**				**N360TC**	25,500	31,200	8,110
15.5	271,300	2.9	114		**316MR3C**	**IEC250M4**				**N360TC**	39,800	44,600	13,500
15.6	270,400	1.6	113		**314MR3B**	**IEC250M4**				**N360TC**	25,500	31,100	8,100
15.6	270,400	1.9	113		**315MR3B**	**IEC250M4**				**N360TC**	25,500	31,100	8,100
16.3	258,100	2.8	108	**315ML3**		**IEC250M4**				**N360TC**	25,200	30,700	7,970
16.4	256,900	1.8	108	**314ML3**		**IEC250M4**				**N360TC**	25,100	30,700	7,960
16.4	256,600	1.9	108		**314MR3C**	**IEC250M4**				**N360TC**	25,100	30,700	7,960
16.4	256,600	2.8	108		**315MR3C**	**IEC250M4**				**N360TC**	25,100	30,700	7,960
18.1	232,600	2.1	97.6		**314MR3B**	**IEC250M4**				**N360TC**	24,400	29,800	7,700
18.1	232,600	2.7	97.6		**315MR3B**	**IEC250M4**				**N360TC**	24,400	29,800	7,700
19.1	221,000	2.0	92.7	**314ML3**		**IEC250M4**				**N360TC**	24,000	29,300	7,570
19.5	216,200	2.4	90.7		**314MR3C**	**IEC250M4**				**N360TC**	23,900	29,100	7,520
21.5	196,000	2.4	82.3		**314MR3B**	**IEC250M4**				**N360TC**	23,200	28,300	7,270
21.5	196,000	3.0	82.3		**315MR3B**	**IEC250M4**				**N360TC**	23,200	28,300	7,270
22.8	185,400	2.4	77.8		**314MR3B**	**IEC250M4**				**N360TC**	22,800	27,800	7,140
24.0	176,100	2.4	73.9	**314ML3**		**IEC250M4**				**N360TC**	22,400	27,400	7,020
25.0	168,500	2.5	70.7		**314MR3C**	**IEC250M4**				**N360TC**	22,100	27,000	6,920
27.0	156,200	2.7	65.5		**314MR3B**	**IEC250M4**				**N360TC**	21,600	26,400	6,740
28.3	149,200	2.8	62.6	**314ML3**		**IEC250M4**				**N360TC**	21,300	26,100	6,640
35	121,700	2.7	51.1		**314MR3B**	**IEC250M4**				**N360TC**	20,100	24,500	6,210
38	114,800	1.4	46.7	**310ML2**		**IEC250M4**				**N360TC**	11,500	14,900	4,350
44	99,500	2.7	40.5	**313ML2**		**IEC250M4**				**N360TC**	19,200	24,000	5,110
46	94,900	1.7	38.6	**310ML2**		**IEC250M4**				**N360TC**	10,900	14,100	4,080
46	95,400	2.5	38.8	**311ML2**		**IEC250M4**				**N360TC**	13,700	17,800	4,090
54	80,000	2.2	32.6	**310ML2**		**IEC250M4**				**N360TC**	10,400	13,400	3,860
58	75,400	1.9	30.7	**310ML2**		**IEC250M4**				**N360TC**	10,200	13,100	3,780
63	68,800	2.5	28.0	**310ML2**		**IEC250M4**				**N360TC**	9,900	12,800	3,670

The technical information shall be considered as indicative, the configurations should be matching the data provided by motors manufacturers on rated powers greater than 30 HP.

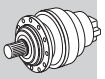

A

P_1 = 75 hp

n_2 rpm	T_2 lb•in	S	i			IE2	IE3	IE2	IE3	NEMA	Rn_2 [lbs] NHC/HC NPC/PC	HZ/PZ	FZ
70	62,300	2.3	25.4	**310ML2**		**IEC250M4**				**N360TC**	9,610	12,400	3,550
70	62,200	2.4	25.3		**310MR2C**	**IEC250M4**				**N360TC**	9,610	12,400	3,550
81	53,600	2.5	21.8	**310ML2**		**IEC250M4**				**N360TC**	9,190	11,900	3,380
83	52,800	3.0	21.3		**310MR2C**	**IEC250M4**				**N360TC**	9,130	11,800	3,350
236	19,000	1.8	7.50	**306L1**		**IEC250M4**				**N360TC**	4,550	5,730	1,270
285	15,700	2.3	6.20	**306L1**		**IEC250M4**				**N360TC**	4,290	5,410	1,190
332	13,500	2.5	5.33	**306L1**		**IEC250M4**				**N360TC**	4,100	5,170	1,140

P_1 = 100 hp

n_2 rpm	T_2 lb•in	S	i			IE2	IE3	IE2	IE3	NEMA	Rn_2 [lbs] NHC/HC NPC/PC	HZ/PZ	FZ
1.4	4,045,300	1.9	1279	**323L4**						**N400TC**	—	—	224,200
1.4	4,045,300	2.1	1279	**325L4**						**N400TC**	—	—	285,300
1.6	3,479,900	2.2	1101	**323L4**						**N400TC**	—	—	214,300
1.6	3,479,900	2.4	1101	**325L4**						**N400TC**	—	—	272,700
1.7	3,241,500	2.3	1025	**323L4**						**N400TC**	—	—	209,700
2.0	2,788,400	2.7	882	**323L4**						**N400TC**	—	—	200,500

The technical information shall be considered as indicative, the configurations should be matching the data provided by motors manufacturers on rated powers greater than 30 HP.

25.2 3/V_M - 3/A GEARMOTOR RATING CHARTS

Reading the rating chart.

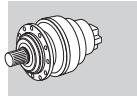

A

1

P_1 = 20 hp

n_2 rpm	T_2 in•bs	S	i			IE2	IE3	IE2	IE3	NEMA	Rn_2 [lbs] NHC/HC NPC/PC	HZ/PZ	FZ
1.0	979,800	1.0	1785	**3/V 16 ML4**		**BE160L4**	**BX160L4**				57,100	64,000	33,600
1.0	687,600	1.8	1215	**3/V 17 ML3**		**BE160L4**	**BX160L4**				84,100	89,300	29,600
1.0	726,500	1.9	1365	**3/V 17 ML3**		**BE160L4**	**BX160L4**				85,500	90,800	30,800
1.0	988,700	1.7	1780	**3/V 17 ML4**		**BE160L4**	**BX160L4**				88,800	94,300	33,600
1.0	847,100	2.7	1473	**3/V 18 ML4**		**BE160L4**	**BX160L4**				88,100	92,800	42,100

2 3 4 5 6 7 8 9 10 11

1	Power applied at gearbox input shaft
2	Gearbox output speed
3	Torque delivered at output shaft: - specified service factor - 10000 h theoretical lifetime
4	Service factor
5	Gear ratio
6	Model and frame size of combined planetary + worm gear unit
7	Model and frame size of combined planetary + helical bevel gear unit
8	IEC motor size and pole number
9	Compact motor size and pole number
10	NEMA motor size
11	Permitted overhung loading on output shaft, based on: - service factor f_S=1 - 10000 h theoretical lifetime - speed of output n_2 For forces not applied at shaft middlepoint, see diagrams provided in the specific gearbox overall dimensioning pages

Index with reference to the size page.
Gearmotor sizes refer to combinations with BONFIGLIOLI-manufactured motors

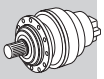

A

3/A 00 L2	243
3/A 01 L2	259
3/A 03 L2	275
3/A 04 L2	293
3/A 05 L2	311
3/A 06 L2	329
3/A 07 L2	347

3/V 00 L3	241
3/V 01 L3	257
3/V 03 L3	273
3/V 04 L3	291
3/V 05 L3	309
3/V 06 L3	327
3/V 07 L3	345
3/V 09 L3	363
3/V 10M L3	379
3/V 10M L4	381
3/V 11M L3	397
3/V 11M L4	399

3/V 13M L3	415
3/V 13M L4	417
3/V 14M L3	433
3/V 14M L4	434
3/V 15M L3	449
3/V 15M L4	450
3/V 16M L3	463
3/V 16M L4	464
3/V 17M L3	475
3/V 17M L4	476
3/V 18M L4	487
3/V 19 L4	499
3/V 21 L4	511

The selection of motors without brake takes into account the requirements of Regulation EC 640/2009 (see section **M** of this catalogue). When the motor rated power is below 0.75kW (1HP), BN/M motors can be provided.
Considering that the Regulation EC 640/2009 shall not apply to the motors equipped with brake, the brakemotor selection takes into account BN/M motors only, without taking into account the rated power. BX, BE, MX and ME brakemotors are available on request.

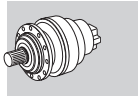

A

P_1 = 0.33 hp

n_2 rpm	T_2 in•bs	S	i			IE1	IE1	NEMA	Rn_2 [lbs] NHC/HC NPC/PC	HZ/PZ	FZ
0.60	22,500	2.8	2588	**3/V 06 L3**		**BN71A4**		**N56C**	15,600	19,600	7,870
0.70	20,000	1.0	2511	**3/V 03 L3**		**BN71A4**		**N56C**	11,300	14,200	5,400
0.70	20,300	1.3	2366	**3/V 04 L3**		**BN71A4**		**N56C**	11,200	14,100	5,400
0.70	19,100	2.0	2232	**3/V 05 L3**		**BN71A4**		**N56C**	11,100	14,000	5,400
0.80	16,000	1.3	2009	**3/V 03 L3**		**BN71A4**		**N56C**	10,900	13,800	5,400
0.90	14,000	1.1	1869	**3/V 01 L3**		**BN71A4**		**N56C**	5,630	6,680	1,800
0.90	16,300	1.6	1774	**3/V 04 L3**		**BN71A4**		**N56C**	10,700	13,600	5,370
0.90	16,200	1.6	1893	**3/V 04 L3**		**BN71A4**		**N56C**	10,800	13,700	5,400
0.90	15,300	2.7	1786	**3/V 05 L3**		**BN71A4**		**N56C**	10,700	13,600	5,380
1.0	10,400	1.0	1381	**3/V 00 L3**		**BN71A4**		**N56C**	5,390	6,810	1,650
1.0	9,560	1.5	1198	**3/V 01 L3**		**BN71A4**		**N56C**	5,290	6,270	1,570
1.0	10,400	1.6	1381	**3/V 01 L3**		**BN71A4**		**N56C**	5,390	6,400	1,650
1.0	11,900	1.2	1495	**3/V 01 L3**		**BN71A4**		**N56C**	5,460	6,470	1,690
1.0	9,480	2.1	1189	**3/V 03 L3**		**BN71A4**		**N56C**	10,100	12,800	4,700
1.0	11,000	2.2	1385	**3/V 03 L3**		**BN71A4**		**N56C**	10,400	13,100	4,940
1.0	12,800	1.7	1610	**3/V 03 L3**		**BN71A4**		**N56C**	10,600	13,400	5,200
1.0	13,800	1.8	1728	**3/V 03 L3**		**BN71A4**		**N56C**	10,700	13,500	5,320
1.0	10,600	2.9	1152	**3/V 04 L3**		**BN71A4**		**N56C**	10,100	12,700	4,650
1.0	10,600	2.9	1231	**3/V 04 L3**		**BN71A4**		**N56C**	10,200	12,900	4,750
1.0	13,000	2.0	1419	**3/V 04 L3**		**BN71A4**		**N56C**	10,400	13,100	4,980
1.0	13,200	2.4	1536	**3/V 04 L3**		**BN71A4**		**N56C**	10,500	13,300	5,120
1.0	15,300	2.5	1674	**3/V 05 L3**		**BN71A4**		**N56C**	10,600	13,400	5,270
2.0	8,610	1.8	731		**3/A 03 L2**	**BN71A4**		**N56C**	9,450	11,900	4,000
2.0	5,820	1.6	689	**3/V 00 L3**		**BN71A4**		**N56C**	4,880	6,170	1,310
2.0	6,130	1.6	818	**3/V 00 L3**		**BN71A4**		**N56C**	5,000	6,320	1,380
2.0	6,770	1.0	903	**3/V 00 L3**		**BN71A4**		**N56C**	5,080	6,410	1,430
2.0	8,300	1.2	1107	**3/V 00 L3**		**BN71A4**		**N56C**	5,230	6,600	1,530
2.0	5,820	2.6	689	**3/V 01 L3**		**BN71A4**		**N56C**	4,880	5,800	1,310
2.0	7,130	1.9	799	**3/V 01 L3**		**BN71A4**		**N56C**	4,990	5,920	1,370
2.0	6,770	1.6	903	**3/V 01 L3**		**BN71A4**		**N56C**	5,080	6,030	1,430
2.0	8,900	1.5	997	**3/V 01 L3**		**BN71A4**		**N56C**	5,150	6,110	1,480
2.0	8,810	2.0	1105	**3/V 01 L3**		**BN71A4**		**N56C**	5,220	6,200	1,530
2.0	6,990	2.7	793	**3/V 03 L3**		**BN71A4**		**N56C**	9,560	12,100	4,110
2.0	8,130	2.8	923	**3/V 03 L3**		**BN71A4**		**N56C**	9,770	12,300	4,320
2.0	8,160	2.9	1023	**3/V 03 L3**		**BN71A4**		**N56C**	9,920	12,500	4,470
2.0	8,980	2.6	887	**3/V 04 L3**		**BN71A4**		**N56C**	9,720	12,300	4,260
3.0	6,280	1.6	533		**3/A 01 L2**	**BN71A4**		**N56C**	4,710	5,590	1,200
3.0	7,840	1.3	665		**3/A 01 L2**	**BN71A4**		**N56C**	4,860	5,770	1,290
3.0	5,830	2.6	495		**3/A 03 L2**	**BN71A4**		**N56C**	8,940	11,300	3,510
3.0	6,760	2.2	574		**3/A 03 L2**	**BN71A4**		**N56C**	9,130	11,500	3,690

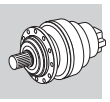

A

P_1 = 0.33 hp

n_2 rpm	T_2 in•bs	S	i			IE1	IE1	NEMA	Rn_2 [lbs] NHC/HC NPC/PC	HZ/PZ	FZ
3.0	7,130	2.2	605		**3/A 03 L2**	**BN71A4**		**N56C**	9,200	11,600	3,750
3.0	4,300	2.1	509	**3/V 00 L3**		**BN71A4**		**N56C**	4,680	5,910	1,180
3.0	4,750	1.3	562	**3/V 00 L3**		**BN71A4**		**N56C**	4,740	5,990	1,220
3.0	5,220	1.8	654	**3/V 00 L3**		**BN71A4**		**N56C**	4,850	6,120	1,280
3.0	4,300	2.6	509	**3/V 01 L3**		**BN71A4**		**N56C**	4,680	5,550	1,180
3.0	4,750	2.6	562	**3/V 01 L3**		**BN71A4**		**N56C**	4,740	5,630	1,220
3.0	5,220	2.0	654	**3/V 01 L3**		**BN71A4**		**N56C**	4,850	5,750	1,280
4.0	4,610	1.0	391		**3/A 00 L2**	**BN71A4**	**M05C4**	**N56C**	4,500	5,690	1,080
4.0	5,200	1.1	441		**3/A 00 L2**	**BN71A4**	**M05C4**	**N56C**	4,580	5,790	1,130
4.0	4,630	1.6	393		**3/A 01 L2**	**BN71A4**		**N56C**	4,510	5,350	1,080
4.0	5,350	1.9	454		**3/A 01 L2**	**BN71A4**		**N56C**	4,600	5,460	1,140
4.0	3,510	2.5	415	**3/V 00 L3**		**BN71A4**		**N56C**	4,540	5,740	1,100
4.0	3,480	1.9	436	**3/V 00 L3**		**BN71A4**		**N56C**	4,570	5,780	1,120
4.0	4,110	2.9	443	**3/V 01 L3**		**BN71A4**		**N56C**	4,580	5,440	1,130
5.0	3,760	1.0	319		**3/A 00 L2**	**BN71A4**	**M05C4**	**N56C**	4,450	5,620	1,010
5.0	4,350	1.1	369		**3/A 00 L2**	**BN71A4**	**M05C4**	**N56C**	4,470	5,640	1,060
5.0	3,660	2.8	311		**3/A 01 L2**	**BN71A4**		**N56C**	4,450	5,280	1,000
5.0	4,290	2.7	364		**3/A 01 L2**	**BN71A4**		**N56C**	4,460	5,290	1,060
6.0	3,490	1.6	296		**3/A 00 L2**	**BN71A4**	**M05C4**	**N56C**	4,450	5,620	990
6.0	3,170	2.8	269		**3/A 01 L2**	**BN71A4**		**N56C**	4,450	5,280	950
7.0	2,980	1.6	253		**3/A 00 L2**	**BN71A4**	**M05C4**	**N56C**	4,450	5,620	930
8.0	2,390	2.4	203		**3/A 00 L2**	**BN71A4**	**M05C4**	**N56C**	4,450	5,620	870
8.0	2,580	2.1	219		**3/A 00 L2**	**BN71A4**	**M05C4**	**N56C**	4,450	5,620	890
8.0	2,590	2.8	220		**3/A 01 L2**	**BN71A4**		**N56C**	4,450	5,280	890
10.0	2,010	2.4	171		**3/A 00 L2**	**BN71A4**	**M05C4**	N56C	4,390	5,540	820

P_1 = 0.5 hp

n_2 rpm	M_2 Nm	S	i			IE1	IE1	NEMA	Rn_2 [lbs] NHC/HC NPC/PC	HZ/PZ	FZ
0.70	29,500	0.9	2366	**3/V 04 L3**		**BN71B4**	**M1SD4**	**N56C**	11,200	14,100	5,400
0.70	32,700	1.9	2588	**3/V 06 L3**		**BN71B4**	**M1SD4**	**N56C**	15,600	19,600	7,870
0.80	23,300	0.9	2009	**3/V 03 L3**		**BN71B4**	**M1SD4**	**N56C**	10,900	13,800	5,400
0.80	27,800	1.4	2232	**3/V 05 L3**		**BN71B4**	**M1SD4**	**N56C**	11,100	14,000	5,400
0.80	27,000	2.8	2139	**3/V 06 L3**		**BN71B4**	**M1SD4**	**N56C**	15,100	19,100	7,870
0.90	23,600	1.1	1893	**3/V 04 L3**		**BN71B4**	**M1SD4**	**N56C**	10,800	13,700	5,400
1.0	13,900	1.0	1198	**3/V 01 L3**		**BN71B4**		**N56C**	5,290	6,270	1,570
1.0	15,100	1.1	1381	**3/V 01 L3**		**BN71B4**		**N56C**	5,390	6,400	1,650
1.0	13,800	1.5	1189	**3/V 03 L3**		**BN71B4**	**M1SD4**	**N56C**	10,100	12,800	4,700
1.0	16,100	1.5	1385	**3/V 03 L3**		**BN71B4**	**M1SD4**	**N56C**	10,400	13,100	4,940
1.0	18,700	1.1	1610	**3/V 03 L3**		**BN71B4**	**M1SD4**	**N56C**	10,600	13,400	5,200
1.0	20,000	1.3	1728	**3/V 03 L3**		**BN71B4**	**M1SD4**	**N56C**	10,700	13,500	5,320
1.0	15,400	2.0	1152	**3/V 04 L3**		**BN71B4**	**M1SD4**	**N56C**	10,100	12,700	4,650
1.0	15,300	2.0	1231	**3/V 04 L3**		**BN71B4**	**M1SD4**	**N56C**	10,200	12,900	4,750
1.0	18,900	1.3	1419	**3/V 04 L3**		**BN71B4**	**M1SD4**	**N56C**	10,400	13,100	4,980
1.0	19,100	1.7	1536	**3/V 04 L3**		**BN71B4**	**M1SD4**	**N56C**	10,500	13,300	5,120
1.0	23,600	1.1	1774	**3/V 04 L3**		**BN71B4**	**M1SD4**	**N56C**	10,700	13,600	5,370
1.0	17,800	2.2	1431	**3/V 05 L3**		**BN71B4**	**M1SD4**	**N56C**	10,400	13,100	5,000
1.0	22,300	1.7	1674	**3/V 05 L3**		**BN71B4**	**M1SD4**	**N56C**	10,600	13,400	5,270
1.0	22,300	1.9	1786	**3/V 05 L3**		**BN71B4**	**M1SD4**	**N56C**	10,700	13,600	5,380
2.0	12,500	1.2	731		**3/A 03 L2**	**BN71B4**		**N56C**	9,450	11,900	4,000
2.0	8,470	1.1	689	**3/V 00 L3**		**BN71B4**		**N56C**	4,880	6,170	1,310
2.0	8,920	1.1	818	**3/V 00 L3**		**BN71B4**		**N56C**	5,000	6,320	1,380
2.0	8,470	1.8	689	**3/V 01 L3**		**BN71B4**		**N56C**	4,880	5,800	1,310

Bonfiglioli Riduttori

P_1 = 0.5 hp

n_2 rpm	M_2 Nm	S	i			IE1	IE1	NEMA	Rn_2 [lbs] NHC/HC NPC/PC	HZ/PZ	FZ
2.0	10,400	1.3	799	**3/V 01 L3**		**BN71B4**		**N56C**	4,990	5,920	1,370
2.0	9,850	1.1	903	**3/V 01 L3**		**BN71B4**		**N56C**	5,080	6,030	1,430
2.0	12,900	1.1	997	**3/V 01 L3**		**BN71B4**		**N56C**	5,150	6,110	1,480
2.0	12,800	1.4	1105	**3/V 01 L3**		**BN71B4**		**N56C**	5,220	6,200	1,530
2.0	9,430	2.5	736	**3/V 03 L3**		**BN71B4**	**M1SD4**	**N56C**	9,460	12,000	4,000
2.0	10,200	1.8	793	**3/V 03 L3**		**BN71B4**	**M1SD4**	**N56C**	9,560	12,100	4,110
2.0	11,800	2.0	923	**3/V 03 L3**		**BN71B4**	**M1SD4**	**N56C**	9,770	12,300	4,320
2.0	11,900	2.0	1023	**3/V 03 L3**		**BN71B4**	**M1SD4**	**N56C**	9,920	12,500	4,470
2.0	10,400	2.2	710	**3/V 04 L3**		**BN71B4**	**M1SD4**	**N56C**	9,410	11,900	3,960
2.0	10,600	2.7	769	**3/V 04 L3**		**BN71B4**	**M1SD4**	**N56C**	9,520	12,000	4,060
2.0	13,000	1.8	887	**3/V 04 L3**		**BN71B4**	**M1SD4**	**N56C**	9,720	12,300	4,260
2.0	12,200	2.8	981	**3/V 04 L3**		**BN71B4**	**M1SD4**	**N56C**	9,860	12,500	4,410
2.0	12,400	3.0	894	**3/V 05 L3**		**BN71B4**	**M1SD4**	**N56C**	9,730	12,300	4,270
2.0	13,200	2.9	1057	**3/V 05 L3**		**BN71B4**	**M1SD4**	**N56C**	9,960	12,600	4,520
2.0	15,500	2.5	1116	**3/V 05 L3**		**BN71B4**	**M1SD4**	**N56C**	10,000	12,700	4,600
3.0	9,130	1.1	533		**3/A 01 L2**	**BN71B4**		**N56C**	4,710	5,590	1,200
3.0	8,480	1.8	495		**3/A 03 L2**	**BN71B4**	**M1SD4**	**N56C**	8,940	11,300	3,510
3.0	9,830	1.5	574		**3/A 03 L2**	**BN71B4**	**M1SD4**	**N56C**	9,130	11,500	3,690
3.0	10,400	1.5	605		**3/A 03 L2**	**BN71B4**		**N56C**	9,200	11,600	3,750
3.0	8,910	2.5	520		**3/A 04 L2**	**BN71B4**	**M1SD4**	**N56C**	9,000	11,400	3,570
3.0	10,200	2.8	594		**3/A 05 L2**	**BN71B4**	**M1SD4**	**N56C**	9,180	11,600	3,730
3.0	6,250	1.4	509	**3/V 00 L3**		**BN71B4**		**N56C**	4,680	5,910	1,180
3.0	7,580	1.2	654	**3/V 00 L3**		**BN71B4**		**N56C**	4,850	6,120	1,280
3.0	6,250	1.8	509	**3/V 01 L3**		**BN71B4**		**N56C**	4,680	5,550	1,180
3.0	6,910	1.8	562	**3/V 01 L3**		**BN71B4**		**N56C**	4,740	5,630	1,220
3.0	7,580	1.4	654	**3/V 01 L3**		**BN71B4**		**N56C**	4,850	5,750	1,280
3.0	7,040	2.5	511	**3/V 03 L3**		**BN71B4**	**M1SD4**	**N56C**	8,960	11,300	3,530
3.0	7,980	2.5	623	**3/V 03 L3**		**BN71B4**	**M1SD4**	**N56C**	9,240	11,700	3,790
4.0	6,730	1.1	393		**3/A 01 L2**	**BN71B4**		**N56C**	4,510	5,350	1,080
4.0	7,780	1.3	454		**3/A 01 L2**	**BN71B4**	**M1SD4**	**N56C**	4,600	5,460	1,140
4.0	7,010	2.4	409		**3/A 03 L2**	**BN71B4**	**M1SD4**	**N56C**	8,700	11,000	3,290
4.0	8,030	2.7	469		**3/A 04 L2**	**BN71B4**	**M1SD4**	**N56C**	8,870	11,200	3,440
4.0	5,100	1.7	415	**3/V 00 L3**		**BN71B4**		**N56C**	4,540	5,740	1,100
4.0	5,060	1.3	436	**3/V 00 L3**		**BN71B4**		**N56C**	4,570	5,780	1,120
4.0	6,030	2.8	430	**3/V 01 L3**		**BN71B4**		**N56C**	4,570	5,420	1,120
4.0	5,980	2.0	443	**3/V 01 L3**		**BN71B4**		**N56C**	4,580	5,440	1,130
5.0	5,330	1.9	311		**3/A 01 L2**	**BN71B4**	**M1SD4**	**N56C**	4,450	5,280	1,000
5.0	6,240	1.8	364		**3/A 01 L2**	**BN71B4**	**M1SD4**	**N56C**	4,460	5,290	1,060
5.0	5,580	2.6	326		**3/A 03 L2**	**BN71B4**	**M1SD4**	**N56C**	8,540	10,800	3,050
5.0	6,030	3.0	352		**3/A 03 L2**	**BN71B4**	**M1SD4**	**N56C**	8,540	10,800	3,130
6.0	5,070	1.1	296		**3/A 00 L2**	**BN71B4**	**M1SD4**	**N56C**	4,450	5,620	990
6.0	4,610	1.9	269		**3/A 01 L2**	**BN71B4**	**M1SD4**	**N56C**	4,450	5,280	950
7.0	4,330	1.1	253		**3/A 00 L2**	**BN71B4**	**M1SD4**	**N56C**	4,450	5,620	930
7.0	4,370	2.3	255		**3/A 01 L2**	**BN71B4**	**M1SD4**	**N56C**	4,450	5,280	940
8.0	3,480	1.7	203		**3/A 00 L2**	**BN71B4**	**M1SD4**	**N56C**	4,450	5,620	870
8.0	3,750	1.5	219		**3/A 00 L2**	**BN71B4**	**M1SD4**	**N56C**	4,450	5,620	890
8.0	3,770	1.9	220		**3/A 01 L2**	**BN71B4**	**M1SD4**	**N56C**	4,450	5,280	890
9.0	3,150	2.9	184		**3/A 01 L2**	**BN71B4**	**M1SD4**	**N56C**	4,450	5,280	840
10.0	2,930	1.7	171		**3/A 00 L2**	**BN71B4**	**M1SD4**	**N56C**	4,390	5,540	820
13.0	2,300	2.1	134		**3/A 00 L2**	**BN71B4**	**M1SD4**	**N56C**	4,070	5,140	760
17.0	1,710	2.8	100		**3/A 00 L2**	**BN71B4**	**M1SD4**	**N56C**	3,730	4,710	690

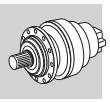

A

P_1 = 0.75 hp

n_2 rpm	T_2 in•bs	S	i			IE1	IE1	NEMA	Rn_2 [lbs] NHC/HC NPC/PC	HZ/PZ	FZ
0.30	89,800	2.8	4959	**3/V 10 ML4**		**BN80A4**	**M1LA4**	**N56C**	25,000	32,300	14,600
0.70	48,300	1.3	2588	**3/V 06 L3**		**BN80A4**	**M1LA4**	**N56C**	15,600	19,600	7,870
0.70	44,300	2.2	2472	**3/V 07 L3**		**BN80A4**			19,300	26,300	10,100
0.80	41,100	1.0	2232	**3/V 05 L3**		**BN80A4**	**M1LA4**	**N56C**	11,100	14,000	5,400
0.80	39,900	1.9	2139	**3/V 06 L3**		**BN80A4**	**M1LA4**	**N56C**	15,100	19,100	7,870
0.80	40,700	2.4	2150	**3/V 07 L3**		**BN80A4**			18,900	25,800	10,100
1.0	20,400	1.0	1189	**3/V 03 L3**		**BN80A4**	**M1LA4**	**N56C**	10,100	12,800	4,700
1.0	23,700	1.0	1385	**3/V 03 L3**		**BN80A4**	**M1LA4**	**N56C**	10,400	13,100	4,940
1.0	22,700	1.3	1152	**3/V 04 L3**		**BN80A4**	**M1LA4**	**N56C**	10,100	12,700	4,650
1.0	22,700	1.4	1231	**3/V 04 L3**		**BN80A4**	**M1LA4**	**N56C**	10,200	12,900	4,750
1.0	27,900	0.9	1419	**3/V 04 L3**		**BN80A4**	**M1LA4**	**N56C**	10,400	13,100	4,980
1.0	28,300	1.1	1536	**3/V 04 L3**		**BN80A4**	**M1LA4**	**N56C**	10,500	13,300	5,120
1.0	22,700	2.1	1231	**3/V 05 L3**		**BN80A4**	**M1LA4**	**N56C**	10,200	12,900	4,750
1.0	26,400	1.5	1431	**3/V 05 L3**		**BN80A4**	**M1LA4**	**N56C**	10,400	13,100	5,000
1.0	33,000	1.2	1674	**3/V 05 L3**		**BN80A4**	**M1LA4**	**N56C**	10,600	13,400	5,270
1.0	32,900	1.3	1786	**3/V 05 L3**		**BN80A4**	**M1LA4**	**N56C**	10,700	13,600	5,380
1.0	27,100	2.7	1395	**3/V 06 L3**		**BN80A4**	**M1LA4**	**N56C**	14,200	18,000	7,230
1.0	33,000	2.3	1768	**3/V 06 L3**		**BN80A4**	**M1LA4**	**N56C**	14,700	18,600	7,820
2.0	12,500	1.2	689	**3/V 01 L3**		**BN80A4**		**N56C**	4,880	5,800	1,310
2.0	13,900	1.7	736	**3/V 03 L3**		**BN80A4**	**M1LA4**	**N56C**	9,460	12,000	4,000
2.0	15,000	1.2	793	**3/V 03 L3**		**BN80A4**	**M1LA4**	**N56C**	9,560	12,100	4,110
2.0	17,500	1.3	923	**3/V 03 L3**		**BN80A4**	**M1LA4**	**N56C**	9,770	12,300	4,320
2.0	17,500	1.3	1023	**3/V 03 L3**		**BN80A4**	**M1LA4**	**N56C**	9,920	12,500	4,470
2.0	15,400	1.5	710	**3/V 04 L3**		**BN80A4**	**M1LA4**	**N56C**	9,410	11,900	3,960
2.0	15,700	1.8	769	**3/V 04 L3**		**BN80A4**	**M1LA4**	**N56C**	9,520	12,000	4,060
2.0	19,300	1.2	887	**3/V 04 L3**		**BN80A4**	**M1LA4**	**N56C**	9,720	12,300	4,260
2.0	18,100	1.9	981	**3/V 04 L3**		**BN80A4**	**M1LA4**	**N56C**	9,860	12,500	4,410
2.0	15,200	2.3	715	**3/V 05 L3**		**BN80A4**	**M1LA4**	**N56C**	9,420	11,900	3,970
2.0	15,600	2.3	793	**3/V 05 L3**		**BN80A4**	**M1LA4**	**N56C**	9,560	12,100	4,110
2.0	18,300	2.0	894	**3/V 05 L3**		**BN80A4**	**M1LA4**	**N56C**	9,730	12,300	4,270
2.0	19,500	1.9	1057	**3/V 05 L3**		**BN80A4**	**M1LA4**	**N56C**	9,960	12,600	4,520
2.0	22,800	1.7	1116	**3/V 05 L3**		**BN80A4**	**M1LA4**	**N56C**	10,000	12,700	4,600
3.0	12,500	1.2	495		**3/A 03 L2**	**BN80A4**	**M1LA4**	**N56C**	8,940	11,300	3,510
3.0	14,500	1.0	574		**3/A 03 L2**	**BN80A4**	**M1LA4**	**N56C**	9,130	11,500	3,690
3.0	15,300	1.0	605		**3/A 03 L2**	**BN80A4**		**N56C**	9,200	11,600	3,750
3.0	13,200	1.7	520		**3/A 04 L2**	**BN80A4**	**M1LA4**	**N56C**	9,000	11,400	3,570
3.0	12,400	2.7	491		**3/A 05 L2**	**BN80A4**	**M1LA4**	**N56C**	8,930	11,300	3,500
3.0	15,000	1.9	594		**3/A 05 L2**	**BN80A4**	**M1LA4**	**N56C**	9,180	11,600	3,730
3.0	9,240	1.0	509	**3/V 00 L3**		**BN80A4**		**N56C**	4,680	5,910	1,180
3.0	9,240	1.2	509	**3/V 01 L3**		**BN80A4**		**N56C**	4,680	5,550	1,180
3.0	10,200	1.2	562	**3/V 01 L3**		**BN80A4**		**N56C**	4,740	5,630	1,220
3.0	10,400	1.7	511	**3/V 03 L3**		**BN80A4**	**M1LA4**	**N56C**	8,960	11,300	3,530
3.0	10,300	2.3	544	**3/V 03 L3**		**BN80A4**	**M1LA4**	**N56C**	9,060	11,400	3,620
3.0	11,800	1.7	623	**3/V 03 L3**		**BN80A4**	**M1LA4**	**N56C**	9,240	11,700	3,790
3.0	9,230	2.9	501	**3/V 04 L3**		**BN80A4**	**M1LA4**	**N56C**	8,960	11,300	3,520
3.0	11,600	2.3	568	**3/V 04 L3**		**BN80A4**	**M1LA4**	**N56C**	9,120	11,500	3,670
3.0	12,300	2.5	623	**3/V 04 L3**		**BN80A4**	**M1LA4**	**N56C**	9,240	11,700	3,790
4.0	10,400	1.6	409		**3/A 03 L2**	**BN80A4**	**M1LA4**	**N56C**	8,700	11,000	3,290
4.0	9,770	2.2	386		**3/A 04 L2**	**BN80A4**	**M1LA4**	**N56C**	8,630	10,900	3,230
4.0	11,900	1.8	469		**3/A 04 L2**	**BN80A4**	**M1LA4**	**N56C**	8,870	11,200	3,440
4.0	10,100	2.7	398		**3/A 05 L2**	**BN80A4**	**M1LA4**	**N56C**	8,670	10,900	3,260
4.0	7,540	1.1	415	**3/V 00 L3**		**BN80A4**		**N56C**	4,540	5,740	1,100
4.0	8,910	1.9	430	**3/V 01 L3**		**BN80A4**		**N56C**	4,570	5,420	1,120
4.0	8,840	1.4	443	**3/V 01 L3**		**BN80A4**		**N56C**	4,580	5,440	1,130
4.0	8,180	2.4	395	**3/V 03 L3**		**BN80A4**	**M1LA4**	**N56C**	8,660	10,900	3,250
4.0	8,710	2.3	460	**3/V 03 L3**		**BN80A4**	**M1LA4**	**N56C**	8,850	11,200	3,420
5.0	7,870	1.3	311		**3/A 01 L2**	**BN80A4**	**M1LA4**	**N56C**	4,450	5,280	1,000

Bonfiglioli Riduttori

P_1 = 0.75 hp

n_2 rpm	T_2 in•bs	S	i			IE1	IE1	NEMA	Rn_2 [lbs] NHC/HC NPC/PC	HZ/PZ	FZ
5.0	9,210	1.2	364		**3/A 01 L2**	**BN80A4**	**M1LA4**	**N56C**	4,460	5,290	1,060
5.0	8,250	1.8	326		**3/A 03 L2**	**BN80A4**	**M1LA4**	**N56C**	8,540	10,800	3,050
5.0	8,910	2.0	352		**3/A 03 L2**	**BN80A4**	**M1LA4**	**N56C**	8,540	10,800	3,130
5.0	8,020	2.6	317		**3/A 04 L2**	**BN80A4**	**M1LA4**	**N56C**	8,540	10,800	3,030
5.0	8,830	2.4	349		**3/A 04 L2**	**BN80A4**	**M1LA4**	**N56C**	8,540	10,800	3,120
6.0	6,810	1.3	269		**3/A 01 L2**	**BN80A4**	**M1LA4**	**N56C**	4,450	5,280	950
6.0	6,810	2.4	269		**3/A 03 L2**	**BN80A4**	**M1LA4**	**N56C**	8,540	10,800	2,860
7.0	6,460	1.6	255		**3/A 01 L2**	**BN80A4**	**M1LA4**	**N56C**	4,450	5,280	940
8.0	5,140	1.1	203		**3/A 00 L2**	**BN80A4**	**M1LA4**	**N56C**	4,450	5,620	870
8.0	5,540	1.0	219		**3/A 00 L2**	**BN80A4**	**M1LA4**	**N56C**	4,450	5,620	890
8.0	5,160	2.2	204		**3/A 01 L2**	**BN80A4**	**M1LA4**	**N56C**	4,450	5,280	870
8.0	5,570	1.3	220		**3/A 01 L2**	**BN80A4**	**M1LA4**	**N56C**	4,450	5,280	890
8.0	5,570	2.6	220		**3/A 03 L2**	**BN80A4**	**M1LA4**	**N56C**	8,540	10,800	2,680
9.0	4,660	2.0	184		**3/A 01 L2**	**BN80A4**	**M1LA4**	**N56C**	4,450	5,280	840
10.0	4,330	1.1	171		**3/A 00 L2**	**BN80A4**	**M1LA4**	**N56C**	4,390	5,540	820
10.0	4,200	2.4	166		**3/A 01 L2**	**BN80A4**	**M1LA4**	**N56C**	4,350	5,160	810
13.0	3,390	1.4	134		**3/A 00 L2**	**BN80A4**	**M1LA4**	**N56C**	4,070	5,140	760
16.0	2,710	2.1	107		**3/A 00 L2**	**BN80A4**	**M1LA4**	**N56C**	3,810	4,810	700
17.0	2,530	1.9	100		**3/A 00 L2**	**BN80A4**	**M1LA4**	**N56C**	3,730	4,710	690
19.0	2,240	2.2	88.6		**3/A 00 L2**	**BN80A4**	**M1LA4**	**N56C**	3,600	4,540	660
21.0	2,030	2.8	80.2		**3/A 00 L2**	**BN80A4**	**M1LA4**	**N56C**	3,490	4,410	640

P_1 = 1 hp

n_2 rpm	T_2 in•bs	S	i			IE2	IE3	IE2	IE3	NEMA	Rn_2 [lbs] NHC/HC NPC/PC	HZ/PZ	FZ
0.40	111,800	2.4	4036	**3/V 10 ML4**		**BE80B4**	**BX90SR4**	**ME2SB4**	**MX2SB4**	**N56C**	24,300	31,400	14,600
0.40	111,600	2.4	4637	**3/V 10 ML4**		**BE80B4**	**BX90SR4**	**ME2SB4**	**MX2SB4**	**N56C**	24,800	32,000	14,600
0.40	119,300	2.1	4959	**3/V 10 ML4**		**BE80B4**	**BX90SR4**	**ME2SB4**	**MX2SB4**	**N56C**	25,000	32,300	14,600
0.50	90,600	2.7	3273	**3/V 10 ML4**		**BE80B4**	**BX90SR4**	**ME2SB4**	**MX2SB4**	**N56C**	23,600	30,500	14,600
0.50	89,400	3.0	3570	**3/V 10 ML4**		**BE80B4**	**BX90SR4**	**ME2SB4**	**MX2SB4**	**N56C**	23,900	30,900	14,600
0.70	64,200	1.0	2588	**3/V 06 L3**		**BE80B4**	**BX90SR4**	**ME2SB4**	**MX2SB4**	**N56C**	15,600	19,600	7,870
0.70	58,800	1.7	2472	**3/V 07 L3**		**BE80B4**	**BX90SR4**	**ME2SB4**	**MX2SB4**		19,300	26,300	10,100
0.80	53,100	1.4	2139	**3/V 06 L3**		**BE80B4**	**BX90SR4**	**ME2SB4**	**MX2SB4**	**N56C**	15,100	19,100	7,870
0.80	54,100	1.8	2150	**3/V 07 L3**		**BE80B4**	**BX90SR4**	**ME2SB4**	**MX2SB4**		18,900	25,800	10,100
0.90	46,700	2.3	1964	**3/V 07 L3**		**BE80B4**	**BX90SR4**	**ME2SB4**	**MX2SB4**		18,700	25,400	10,100
1.0	30,100	1.0	1231	**3/V 04 L3**		**BE80B4**	**BX90SR4**	**ME2SB4**	**MX2SB4**	**N56C**	10,200	12,900	4,750
1.0	30,100	1.6	1231	**3/V 05 L3**		**BE80B4**	**BX90SR4**	**ME2SB4**	**MX2SB4**	**N56C**	10,200	12,900	4,750
1.0	35,000	1.1	1431	**3/V 05 L3**		**BE80B4**	**BX90SR4**	**ME2SB4**	**MX2SB4**	**N56C**	10,400	13,100	5,000
1.0	43,700	0.9	1786	**3/V 05 L3**		**BE80B4**	**BX90SR4**	**ME2SB4**	**MX2SB4**	**N56C**	10,700	13,600	5,380
1.0	30,100	2.3	1212	**3/V 06 L3**		**BE80B4**	**BX90SR4**	**ME2SB4**	**MX2SB4**	**N56C**	14,000	17,600	6,900
1.0	36,000	2.0	1395	**3/V 06 L3**		**BE80B4**	**BX90SR4**	**ME2SB4**	**MX2SB4**	**N56C**	14,200	18,000	7,230
1.0	43,900	1.7	1768	**3/V 06 L3**		**BE80B4**	**BX90SR4**	**ME2SB4**	**MX2SB4**	**N56C**	14,700	18,600	7,820
1.0	39,900	2.4	1545	**3/V 07 L3**		**BE80B4**	**BX90SR4**	**ME2SB4**	**MX2SB4**		18,100	24,600	9,610
2.0	18,500	1.3	736	**3/V 03 L3**		**BE80B4**	**BX90SR4**	**ME2SB4**	**MX2SB4**	**N56C**	9,460	12,000	4,000
2.0	19,900	0.9	793	**3/V 03 L3**		**BE80B4**	**BX90SR4**	**ME2SB4**	**MX2SB4**	**N56C**	9,560	12,100	4,110
2.0	23,200	1.0	923	**3/V 03 L3**		**BE80B4**	**BX90SR4**	**ME2SB4**	**MX2SB4**	**N56C**	9,770	12,300	4,320
2.0	23,300	1.0	1023	**3/V 03 L3**		**BE80B4**	**BX90SR4**	**ME2SB4**	**MX2SB4**	**N56C**	9,920	12,500	4,470
2.0	20,500	1.1	710	**3/V 04 L3**		**BE80B4**	**BX90SR4**	**ME2SB4**	**MX2SB4**	**N56C**	9,410	11,900	3,960
2.0	20,900	1.4	769	**3/V 04 L3**		**BE80B4**	**BX90SR4**	**ME2SB4**	**MX2SB4**	**N56C**	9,520	12,000	4,060

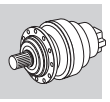

A

P_1 = 1 hp

n_2 rpm	T_2 in•bs	S	i			IE2	IE3	IE2	IE3	NEMA	Rn_2 [lbs] NHC/HC NPC/PC	HZ/PZ	FZ
2.0	25,600	0.9	887	**3/V 04 L3**		**BE80B4**	**BX90SR4**	**ME2SB4**	**MX2SB4**	**N56C**	9,720	12,300	4,260
2.0	24,000	1.4	981	**3/V 04 L3**		**BE80B4**	**BX90SR4**	**ME2SB4**	**MX2SB4**	**N56C**	9,860	12,500	4,410
2.0	30,100	1.0	1152	**3/V 04 L3**		**BE80B4**	**BX90SR4**	**ME2SB4**	**MX2SB4**	**N56C**	10,100	12,700	4,650
2.0	20,200	1.8	715	**3/V 05 L3**		**BE80B4**	**BX90SR4**	**ME2SB4**	**MX2SB4**	**N56C**	9,420	11,900	3,970
2.0	20,800	1.7	793	**3/V 05 L3**		**BE80B4**	**BX90SR4**	**ME2SB4**	**MX2SB4**	**N56C**	9,560	12,100	4,110
2.0	24,300	1.5	894	**3/V 05 L3**		**BE80B4**	**BX90SR4**	**ME2SB4**	**MX2SB4**	**N56C**	9,730	12,300	4,270
2.0	25,900	1.5	1057	**3/V 05 L3**		**BE80B4**	**BX90SR4**	**ME2SB4**	**MX2SB4**	**N56C**	9,960	12,600	4,520
2.0	30,300	1.3	1116	**3/V 05 L3**		**BE80B4**	**BX90SR4**	**ME2SB4**	**MX2SB4**	**N56C**	10,000	12,700	4,600
2.0	26,500	2.6	930	**3/V 06 L3**		**BE80B4**	**BX90SR4**	**ME2SB4**	**MX2SB4**	**N56C**	13,400	16,900	6,310
2.0	29,800	2.4	1153	**3/V 06 L3**		**BE80B4**	**BX90SR4**	**ME2SB4**	**MX2SB4**	**N56C**	13,900	17,500	6,780
3.0	17,500	1.3	520		**3/A 04 L2**	**BE80B4**	**BX90SR4**	**ME2SB4**	**MX2SB4**	**N56C**	9,000	11,400	3,570
3.0	20,000	1.4	594		**3/A 05 L2**	**BE80B4**	**BX90SR4**	**ME2SB4**	**MX2SB4**	**N56C**	9,180	11,600	3,730
3.0	20,100	2.6	611		**3/A 06 L2**	**BE80B4**	**BX90SR4**	**ME2SB4**	**MX2SB4**	**N56C**	12,700	16,000	5,490
3.0	22,100	2.3	671		**3/A 06 L2**	**BE80B4**	**BX90SR4**	**ME2SB4**	**MX2SB4**	**N56C**	12,800	16,200	5,660
3.0	12,300	0.9	509	**3/V 01 L3**		**BE80B4**	**BX90SR4**			**N56C**	4,680	5,550	1,180
3.0	13,600	0.9	562	**3/V 01 L3**		**BE80B4**	**BX90SR4**			**N56C**	4,740	5,630	1,220
3.0	16,600	0.9	689	**3/V 01 L3**		**BE80B4**	**BX90SR4**			**N56C**	4,880	5,800	1,310
3.0	13,800	1.3	511	**3/V 03 L3**		**BE80B4**	**BX90SR4**	**ME2SB4**	**MX2SB4**	**N56C**	8,960	11,300	3,530
3.0	13,700	1.8	544	**3/V 03 L3**		**BE80B4**	**BX90SR4**	**ME2SB4**	**MX2SB4**	**N56C**	9,060	11,400	3,620
3.0	15,700	1.3	623	**3/V 03 L3**		**BE80B4**	**BX90SR4**	**ME2SB4**	**MX2SB4**	**N56C**	9,240	11,700	3,790
3.0	15,400	1.8	568	**3/V 04 L3**		**BE80B4**	**BX90SR4**	**ME2SB4**	**MX2SB4**	**N56C**	9,120	11,500	3,670
3.0	16,300	1.9	623	**3/V 04 L3**		**BE80B4**	**BX90SR4**	**ME2SB4**	**MX2SB4**	**N56C**	9,240	11,700	3,790
3.0	14,900	2.3	529	**3/V 05 L3**		**BE80B4**	**BX90SR4**	**ME2SB4**	**MX2SB4**	**N56C**	9,020	11,400	3,590
3.0	16,600	2.5	576	**3/V 05 L3**		**BE80B4**	**BX90SR4**	**ME2SB4**	**MX2SB4**	**N56C**	9,140	11,500	3,690
3.0	16,300	2.4	623	**3/V 05 L3**		**BE80B4**	**BX90SR4**	**ME2SB4**	**MX2SB4**	**N56C**	9,240	11,700	3,790
4.0	13,800	1.2	409		**3/A 03 L2**	**BE80B4**	**BX90SR4**	**ME2SB4**	**MX2SB4**	**N56C**	8,700	11,000	3,290
4.0	16,600	0.9	495		**3/A 03 L2**	**BE80B4**	**BX90SR4**	**ME2SB4**	**MX2SB4**	**N56C**	8,940	11,300	3,510
4.0	15,800	1.4	469		**3/A 04 L2**	**BE80B4**	**BX90SR4**	**ME2SB4**	**MX2SB4**	**N56C**	8,870	11,200	3,440
4.0	13,400	2.1	398		**3/A 05 L2**	**BE80B4**	**BX90SR4**	**ME2SB4**	**MX2SB4**	**N56C**	8,670	10,900	3,260
4.0	14,200	2.6	422		**3/A 05 L2**	**BE80B4**	**BX90SR4**	**ME2SB4**	**MX2SB4**	**N56C**	8,740	11,000	3,330
4.0	16,500	2.0	491		**3/A 05 L2**	**BE80B4**	**BX90SR4**	**ME2SB4**	**MX2SB4**	**N56C**	8,930	11,300	3,500
4.0	11,800	1.4	430	**3/V 01 L3**		**BE80B4**	**BX90SR4**			**N56C**	4,570	5,420	1,120
4.0	11,700	1.0	443	**3/V 01 L3**		**BE80B4**	**BX90SR4**			**N56C**	4,580	5,440	1,130
4.0	10,900	1.8	395	**3/V 03 L3**		**BE80B4**	**BX90SR4**	**ME2SB4**	**MX2SB4**	**N56C**	8,660	10,900	3,250
4.0	11,600	1.8	460	**3/V 03 L3**		**BE80B4**	**BX90SR4**	**ME2SB4**	**MX2SB4**	**N56C**	8,850	11,200	3,420
4.0	12,300	2.7	453	**3/V 04 L3**		**BE80B4**	**BX90SR4**	**ME2SB4**	**MX2SB4**	**N56C**	8,830	11,200	3,410
4.0	12,300	2.2	501	**3/V 04 L3**		**BE80B4**	**BX90SR4**	**ME2SB4**	**MX2SB4**	**N56C**	8,960	11,300	3,520
4.0	11,400	2.8	396	**3/V 05 L3**		**BE80B4**	**BX90SR4**	**ME2SB4**	**MX2SB4**	**N56C**	8,660	10,900	3,260
5.0	12,200	0.9	364		**3/A 01 L2**	**BE80B4**	**BX90SR4**	**ME2SB4**	**MX2SB4**	**N56C**	4,460	5,290	1,060
5.0	11,000	1.3	326		**3/A 03 L2**	**BE80B4**	**BX90SR4**	**ME2SB4**	**MX2SB4**	**N56C**	8,540	10,800	3,050
5.0	11,800	1.5	352		**3/A 03 L2**	**BE80B4**	**BX90SR4**	**ME2SB4**	**MX2SB4**	**N56C**	8,540	10,800	3,130
5.0	11,700	1.8	349		**3/A 04 L2**	**BE80B4**	**BX90SR4**	**ME2SB4**	**MX2SB4**	**N56C**	8,540	10,800	3,120
5.0	13,000	1.6	386		**3/A 04 L2**	**BE80B4**	**BX90SR4**	**ME2SB4**	**MX2SB4**	**N56C**	8,630	10,900	3,230
5.0	11,100	2.9	329		**3/A 05 L2**	**BE80B4**	**BX90SR4**	**ME2SB4**	**MX2SB4**	**N56C**	8,540	10,800	3,060
5.0	10,400	3.0	384	**3/V 04 L3**		**BE80B4**	**BX90SR4**	**ME2SB4**	**MX2SB4**	**N56C**	8,620	10,900	3,220
6.0	10,500	1.0	311		**3/A 01 L2**	**BE80B4**	**BX90SR4**	**ME2SB4**	**MX2SB4**	**N56C**	4,450	5,280	1,000
6.0	9,520	2.6	283		**3/A 04 L2**	**BE80B4**	**BX90SR4**	**ME2SB4**	**MX2SB4**	**N56C**	8,540	10,800	2,910
6.0	10,700	2.0	317		**3/A 04 L2**	**BE80B4**	**BX90SR4**	**ME2SB4**	**MX2SB4**	**N56C**	8,540	10,800	3,030
7.0	8,580	1.2	255		**3/A 01 L2**	**BE80B4**	**BX90SR4**	**ME2SB4**	**MX2SB4**	**N56C**	4,450	5,280	940
7.0	9,050	1.0	269		**3/A 01 L2**	**BE80B4**	**BX90SR4**	**ME2SB4**	**MX2SB4**	**N56C**	4,450	5,280	950
7.0	9,050	1.8	269		**3/A 03 L2**	**BE80B4**	**BX90SR4**	**ME2SB4**	**MX2SB4**	**N56C**	8,540	10,800	2,860
8.0	7,400	1.0	220		**3/A 01 L2**	**BE80B4**	**BX90SR4**	**ME2SB4**	**MX2SB4**	**N56C**	4,450	5,280	890
8.0	7,400	2.0	220		**3/A 03 L2**	**BE80B4**	**BX90SR4**	**ME2SB4**	**MX2SB4**	**N56C**	8,540	10,800	2,680
9.0	6,860	1.7	204		**3/A 01 L2**	**BE80B4**	**BX90SR4**	**ME2SB4**	**MX2SB4**	**N56C**	4,450	5,280	870

Bonfiglioli Riduttori

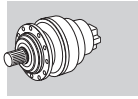

A

P_1 = 1 hp

n_2 rpm	T_2 in•bs	S	i			IE2	IE3	IE2	IE3	NEMA	Rn_2 [lbs] NHC/HC NPC/PC	HZ/PZ	FZ
10.0	6,190	1.5	184		**3/A 01 L2**	**BE80B4**	**BX90SR4**	**ME2SB4**	**MX2SB4**	**N56C**	4,450	5,280	840
10.0	6,120	2.6	182		**3/A 03 L2**	**BE80B4**	**BX90SR4**	**ME2SB4**	**MX2SB4**	**N56C**	8,540	10,800	2,510
11.0	5,580	1.8	166		**3/A 01 L2**	**BE80B4**	**BX90SR4**	**ME2SB4**	**MX2SB4**	**N56C**	4,350	5,160	810
13.0	4,510	1.1	134		**3/A 00 L2**	**BE80B4**	**BX90SR4**	**ME2SB4**	**MX2SB4**	**N56C**	4,070	5,140	760
13.0	4,470	2.6	133		**3/A 01 L2**	**BE80B4**	**BX90SR4**	**ME2SB4**	**MX2SB4**	**N56C**	4,070	4,830	760
16.0	3,600	1.6	107		**3/A 00 L2**	**BE80B4**	**BX90SR4**	**ME2SB4**	**MX2SB4**	N56C	3,810	4,810	700
17.0	3,430	3.0	102		**3/A 01 L2**	**BE80B4**	**BX90SR4**	**ME2SB4**	**MX2SB4**	N56C	3,750	4,450	690
18.0	3,360	1.4	100		**3/A 00 L2**	**BE80B4**	**BX90SR4**	**ME2SB4**	**MX2SB4**	N56C	3,730	4,710	690
20.0	2,980	1.6	88.6		**3/A 00 L2**	**BE80B4**	**BX90SR4**	**ME2SB4**	**MX2SB4**	N56C	3,600	4,540	660
22.0	2,700	2.1	80.2		**3/A 00 L2**	**BE80B4**	**BX90SR4**	**ME2SB4**	**MX2SB4**	N56C	3,490	4,410	640
25.0	2,390	2.4	71.0		**3/A 00 L2**	**BE80B4**	**BX90SR4**	**ME2SB4**	**MX2SB4**	N56C	3,370	4,250	610
29.0	2,060	2.8	61.2		**3/A 00 L2**	**BE80B4**	**BX90SR4**	**ME2SB4**	**MX2SB4**	N56C	3,220	4,070	580
34	1,740	2.8	51.8		**3/A 00 L2**	**BE80B4**	**BX90SR4**	**ME2SB4**	**MX2SB4**	N56C	3,060	3,870	550

P_1 = 1.5 hp

n_2 rpm	T_2 in•bs	S	i			IE2	IE3	IE2	IE3	NEMA	Rn_2 [lbs] NHC/HC NPC/PC	HZ/PZ	FZ
0.30	195,800	2.2	5326	**3/V 11 ML4**		**BE90S4**	**BX90S4**	**ME3SA4**	**MX3SA4**	**N140TC**	31,600	33,000	14,600
0.30	180,600	2.5	5046	**3/V 13 ML4**		**BE90S4**	**BX90S4**	**ME3SA4**	**MX3SA4**	**N140TC**	43,200	51,900	18,000
0.40	164,000	1.6	4036	**3/V 10 ML4**		**BE90S4**	**BX90S4**	**ME3SA4**	**MX3SA4**	**N140TC**	24,300	31,400	14,600
0.40	163,700	1.6	4637	**3/V 10 ML4**		**BE90S4**	**BX90S4**	**ME3SA4**	**MX3SA4**	**N140TC**	24,800	32,000	14,600
0.40	175,100	1.4	4959	**3/V 10 ML4**		**BE90S4**	**BX90S4**	**ME3SA4**	**MX3SA4**	**N140TC**	25,000	32,300	14,600
0.40	147,000	2.9	4106	**3/V 11 ML4**		**BE90S4**	**BX90S4**	**ME3SA4**	**MX3SA4**	**N140TC**	30,500	31,800	14,600
0.40	164,300	2.6	4410	**3/V 11 ML4**		**BE90S4**	**BX90S4**	**ME3SA4**	**MX3SA4**	**N140TC**	30,800	32,200	14,600
0.40	168,900	3.0	4536	**3/V 13 ML4**		**BE90S4**	**BX90S4**	**ME3SA4**	**MX3SA4**	**N140TC**	42,900	51,900	18,000
0.50	133,000	1.8	3273	**3/V 10 ML4**		**BE90S4**	**BX90S4**	**ME3SA4**	**MX3SA4**	**N140TC**	23,600	30,500	14,600
0.50	131,200	2.0	3570	**3/V 10 ML4**		**BE90S4**	**BX90S4**	**ME3SA4**	**MX3SA4**	**N140TC**	23,900	30,900	14,600
0.50	127,300	2.9	3557	**3/V 11 ML4**		**BE90S4**	**BX90S4**	**ME3SA4**	**MX3SA4**	**N140TC**	29,900	31,200	14,600
0.60	121,400	2.2	2987	**3/V 10 ML4**		**BE90S4**	**BX90S4**	**ME3SA4**	**MX3SA4**	**N140TC**	23,300	30,100	14,600
0.70	86,300	1.1	2472	**3/V 07 L3**		**BE90S4**	**BX90S4**	**ME3SA4**	**MX3SA4**	**N140TC**	19,300	26,300	10,100
0.70	100,900	2.4	2455	**3/V 10 ML4**		**BE90S4**	**BX90S4**	**ME3SA4**	**MX3SA4**	**N140TC**	22,700	29,200	14,600
0.80	77,900	1.0	2139	**3/V 06 L3**		**BE90S4**	**BX90S4**	**ME3SA4**	**MX3SA4**	**N140TC**	15,100	19,100	7,870
0.80	79,300	1.2	2150	**3/V 07 L3**		**BE90S4**	**BX90S4**	**ME3SA4**	**MX3SA4**	**N140TC**	18,900	25,800	10,100
0.80	87,600	2.8	2156	**3/V 10 ML4**		**BE90S4**	**BX90S4**	**ME3SA4**	**MX3SA4**	**N140TC**	22,200	28,700	14,600
0.90	68,600	1.6	1964	**3/V 07 L3**		**BE90S4**	**BX90S4**	**ME3SA4**	**MX3SA4**	**N140TC**	18,700	25,400	10,100
1.0	44,200	1.1	1231	**3/V 05 L3**		**BE90S4**	**BX90S4**	**ME3SA4**	**MX3SA4**	**N140TC**	10,200	12,900	4,750
1.0	44,100	1.6	1212	**3/V 06 L3**		**BE90S4**	**BX90S4**	**ME3SA4**	**MX3SA4**	**N140TC**	14,000	17,600	6,900
1.0	52,900	1.4	1395	**3/V 06 L3**		**BE90S4**	**BX90S4**	**ME3SA4**	**MX3SA4**	**N140TC**	14,200	18,000	7,230
1.0	64,400	1.2	1768	**3/V 06 L3**		**BE90S4**	**BX90S4**	**ME3SA4**	**MX3SA4**	**N140TC**	14,700	18,600	7,820
1.0	47,500	2.6	1288	**3/V 07 L3**		**BE90S4**	**BX90S4**	**ME3SA4**	**MX3SA4**	**N140TC**	17,600	24,000	9,050
1.0	52,100	2.1	1411	**3/V 07 L3**		**BE90S4**	**BX90S4**	**ME3SA4**	**MX3SA4**	**N140TC**	17,800	24,300	9,330
1.0	58,600	1.6	1545	**3/V 07 L3**		**BE90S4**	**BX90S4**	**ME3SA4**	**MX3SA4**	**N140TC**	18,100	24,600	9,610
2.0	30,700	0.9	769	**3/V 04 L3**		**BE90S4**	**BX90S4**	**ME3SA4**	**MX3SA4**	**N140TC**	9,520	12,000	4,060
2.0	35,200	1.0	981	**3/V 04 L3**		**BE90S4**	**BX90S4**	**ME3SA4**	**MX3SA4**	**N140TC**	9,860	12,500	4,410
2.0	29,600	1.2	715	**3/V 05 L3**		**BE90S4**	**BX90S4**	**ME3SA4**	**MX3SA4**	**N140TC**	9,420	11,900	3,970
2.0	30,400	1.2	793	**3/V 05 L3**		**BE90S4**	**BX90S4**	**ME3SA4**	**MX3SA4**	**N140TC**	9,560	12,100	4,110
2.0	35,700	1.0	894	**3/V 05 L3**		**BE90S4**	**BX90S4**	**ME3SA4**	**MX3SA4**	**N140TC**	9,730	12,300	4,270
2.0	38,000	1.0	1057	**3/V 05 L3**		**BE90S4**	**BX90S4**	**ME3SA4**	**MX3SA4**	**N140TC**	9,960	12,600	4,520
2.0	29,600	2.2	698	**3/V 06 L3**		**BE90S4**	**BX90S4**	**ME3SA4**	**MX3SA4**	**N140TC**	12,900	16,300	5,740
2.0	30,000	2.2	791	**3/V 06 L3**		**BE90S4**	**BX90S4**	**ME3SA4**	**MX3SA4**	**N140TC**	13,100	16,600	5,980

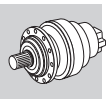

A

P_1 = 1.5 hp

n_2 rpm	T_2 in•bs	S	i			IE2	IE3	IE2	IE3	NEMA	Rn_2 [lbs] NHC/HC NPC/PC	HZ/PZ	FZ
2.0	39,000	1.7	930	**3/V 06 L3**		**BE90S4**	**BX90S4**	**ME3SA4**	**MX3SA4**	**N140TC**	13,400	16,900	6,310
2.0	37,600	2.2	992	**3/V 06 L3**		**BE90S4**	**BX90S4**	**ME3SA4**	**MX3SA4**	**N140TC**	13,600	17,100	6,450
2.0	43,700	1.6	1153	**3/V 06 L3**		**BE90S4**	**BX90S4**	**ME3SA4**	**MX3SA4**	**N140TC**	13,900	17,500	6,780
2.0	32,400	2.7	773	**3/V 07 L3**		**BE90S4**	**BX90S4**	**ME3SA4**	**MX3SA4**	**N140TC**	16,400	22,300	7,630
2.0	44,500	2.0	1159	**3/V 07 L3**		**BE90S4**	**BX90S4**	**ME3SA4**	**MX3SA4**	**N140TC**	17,300	23,600	8,740
3.0	29,300	1.0	594		**3/A 05 L2**	**BE90S4**	**BX90S4**	**ME3SA4**	**MX3SA4**	**N140TC**	9,180	11,600	3,730
3.0	24,400	2.5	505		**3/A 06 L2**	**BE90S4**	**BX90S4**	**ME3SA4**	**MX3SA4**	**N140TC**	12,300	15,500	5,150
3.0	26,800	2.3	555		**3/A 06 L2**	**BE90S4**	**BX90S4**	**ME3SA4**	**MX3SA4**	**N140TC**	12,500	15,700	5,320
3.0	29,500	1.7	611		**3/A 06 L2**	**BE90S4**	**BX90S4**	**ME3SA4**	**MX3SA4**	**N140TC**	12,700	16,000	5,490
3.0	32,400	1.6	671		**3/A 06 L2**	**BE90S4**	**BX90S4**	**ME3SA4**	**MX3SA4**	**N140TC**	12,800	16,200	5,660
3.0	20,100	1.2	544	**3/V 03 L3**		**BE90S4**	**BX90S4**			**N140TC**	9,060	11,400	3,620
3.0	18,000	1.5	501	**3/V 04 L3**		**BE90S4**	**BX90S4**	**ME3SA4**	**MX3SA4**	**N140TC**	8,960	11,300	3,520
3.0	22,700	1.2	568	**3/V 04 L3**		**BE90S4**	**BX90S4**	**ME3SA4**	**MX3SA4**	**N140TC**	9,120	11,500	3,670
3.0	23,900	1.3	623	**3/V 04 L3**		**BE90S4**	**BX90S4**	**ME3SA4**	**MX3SA4**	**N140TC**	9,240	11,700	3,790
3.0	21,900	1.5	529	**3/V 05 L3**		**BE90S4**	**BX90S4**	**ME3SA4**	**MX3SA4**	**N140TC**	9,020	11,400	3,590
3.0	24,400	1.7	576	**3/V 05 L3**		**BE90S4**	**BX90S4**	**ME3SA4**	**MX3SA4**	**N140TC**	9,140	11,500	3,690
3.0	23,900	1.6	623	**3/V 05 L3**		**BE90S4**	**BX90S4**	**ME3SA4**	**MX3SA4**	**N140TC**	9,240	11,700	3,790
3.0	27,700	2.9	661	**3/V 06 L3**		**BE90S4**	**BX90S4**	**ME3SA4**	**MX3SA4**	**N140TC**	12,800	16,100	5,640
4.0	23,100	0.9	469		**3/A 04 L2**	**BE90S4**	**BX90S4**	**ME3SA4**	**MX3SA4**	**N140TC**	8,870	11,200	3,440
4.0	19,600	1.4	398		**3/A 05 L2**	**BE90S4**	**BX90S4**	**ME3SA4**	**MX3SA4**	**N140TC**	8,670	10,900	3,260
4.0	20,800	1.8	422		**3/A 05 L2**	**BE90S4**	**BX90S4**	**ME3SA4**	**MX3SA4**	**N140TC**	8,740	11,000	3,330
4.0	24,200	1.4	491		**3/A 05 L2**	**BE90S4**	**BX90S4**	**ME3SA4**	**MX3SA4**	**N140TC**	8,930	11,300	3,500
4.0	18,800	2.6	388		**3/A 06 L2**	**BE90S4**	**BX90S4**	**ME3SA4**	**MX3SA4**	**N140TC**	11,900	15,000	4,720
4.0	16,000	1.2	395	**3/V 03 L3**		**BE90S4**	**BX90S4**			**N140TC**	8,660	10,900	3,250
4.0	17,000	1.2	460	**3/V 03 L3**		**BE90S4**	**BX90S4**			**N140TC**	8,850	11,200	3,420
4.0	18,100	1.8	453	**3/V 04 L3**		**BE90S4**	**BX90S4**	**ME3SA4**	**MX3SA4**	**N140TC**	8,830	11,200	3,410
4.0	16,800	1.9	396	**3/V 05 L3**		**BE90S4**	**BX90S4**	**ME3SA4**	**MX3SA4**	**N140TC**	8,660	10,900	3,260
4.0	19,600	2.1	462	**3/V 05 L3**		**BE90S4**	**BX90S4**	**ME3SA4**	**MX3SA4**	**N140TC**	8,850	11,200	3,430
5.0	16,100	0.9	326		**3/A 03 L2**	**BE90S4**	**BX90S4**	**ME3SA4**	**MX3SA4**	**N140TC**	8,540	10,800	3,050
5.0	17,400	1.0	352		**3/A 03 L2**	**BE90S4**	**BX90S4**	**ME3SA4**	**MX3SA4**	**N140TC**	8,540	10,800	3,130
5.0	15,600	1.4	317		**3/A 04 L2**	**BE90S4**	**BX90S4**	**ME3SA4**	**MX3SA4**	**N140TC**	8,540	10,800	3,030
5.0	17,200	1.2	349		**3/A 04 L2**	**BE90S4**	**BX90S4**	**ME3SA4**	**MX3SA4**	**N140TC**	8,540	10,800	3,120
5.0	19,100	1.1	386		**3/A 04 L2**	**BE90S4**	**BX90S4**	**ME3SA4**	**MX3SA4**	**N140TC**	8,630	10,900	3,230
5.0	16,200	2.0	329		**3/A 05 L2**	**BE90S4**	**BX90S4**	**ME3SA4**	**MX3SA4**	**N140TC**	8,540	10,800	3,060
5.0	18,400	3.0	380		**3/A 06 L2**	**BE90S4**	**BX90S4**	**ME3SA4**	**MX3SA4**	**N140TC**	11,800	14,900	4,690
5.0	15,300	2.0	384	**3/V 04 L3**		**BE90S4**	**BX90S4**	**ME3SA4**	**MX3SA4**	**N140TC**	8,620	10,900	3,220
6.0	13,300	1.2	269		**3/A 03 L2**	**BE90S4**	**BX90S4**	**ME3SA4**	**MX3SA4**	**N140TC**	8,540	10,800	2,860
6.0	14,000	1.8	283		**3/A 04 L2**	**BE90S4**	**BX90S4**	**ME3SA4**	**MX3SA4**	**N140TC**	8,540	10,800	2,910
6.0	13,800	2.3	280		**3/A 05 L2**	**BE90S4**	**BX90S4**	**ME3SA4**	**MX3SA4**	**N140TC**	8,540	10,800	2,900
7.0	12,300	2.5	250		**3/A 04 L2**	**BE90S4**	**BX90S4**	**ME3SA4**	**MX3SA4**	**N140TC**	8,540	10,800	2,790
8.0	10,900	1.3	220		**3/A 03 L2**	**BE90S4**	**BX90S4**	**ME3SA4**	**MX3SA4**	**N140TC**	8,540	10,800	2,680
8.0	10,100	2.5	205		**3/A 04 L2**	**BE90S4**	**BX90S4**	**ME3SA4**	**MX3SA4**	**N140TC**	8,540	10,800	2,620
8.0	11,200	2.8	226		**3/A 04 L2**	**BE90S4**	**BX90S4**	**ME3SA4**	**MX3SA4**	**N140TC**	8,540	10,800	2,700
8.0	10,500	2.6	212		**3/A 05 L2**	**BE90S4**	**BX90S4**	**ME3SA4**	**MX3SA4**	**N140TC**	8,540	10,800	2,650
9.0	9,080	1.0	184		**3/A 01 L2**	**BE90S4**	**BX90S4**	**ME3SA4**	**MX3SA4**	**N140TC**	4,450	5,280	840
9.0	10,100	1.1	204		**3/A 01 L2**	**BE90S4**	**BX90S4**	**ME3SA4**	**MX3SA4**	**N140TC**	4,450	5,280	870
10.0	8,190	1.2	166		**3/A 01 L2**	**BE90S4**	**BX90S4**	**ME3SA4**	**MX3SA4**	**N140TC**	4,350	5,160	810
10.0	8,980	1.8	182		**3/A 03 L2**	**BE90S4**	**BX90S4**	**ME3SA4**	**MX3SA4**	**N140TC**	8,540	10,800	2,510
10.0	8,590	3.0	174		**3/A 04 L2**	**BE90S4**	**BX90S4**	**ME3SA4**	**MX3SA4**	**N140TC**	8,450	10,700	2,480
12.0	7,350	2.9	149		**3/A 04 L2**	**BE90S4**	**BX90S4**	**ME3SA4**	**MX3SA4**	**N140TC**	8,070	10,200	2,350
13.0	6,560	1.8	133		**3/A 01 L2**	**BE90S4**	**BX90S4**	**ME3SA4**	**MX3SA4**	**N140TC**	4,070	4,830	760
16.0	5,280	1.1	107		**3/A 00 L2**	**BE90S4**	**BX90S4**	**ME3SA4**	**MX3SA4**	**N140TC**	3,810	4,810	700
17.0	4,940	1.0	100		**3/A 00 L2**	**BE90S4**	**BX90S4**	**ME3SA4**	**MX3SA4**	**N140TC**	3,730	4,710	690

Bonfiglioli Riduttori

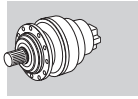

A

P_1 = 1.5 hp

n_2 rpm	T_2 in•bs	S	i			IE2	IE3	IE2	IE3	NEMA	Rn_2 [lbs] NHC/HC NPC/PC	HZ/PZ	FZ
17.0	5,030	2.0	102		**3/A 01 L2**	**BE90S4**	**BX90S4**	**ME3SA4**	**MX3SA4**	**N140TC**	3,750	4,450	690
20.0	4,370	1.1	88.6		**3/A 00 L2**	**BE90S4**	**BX90S4**	**ME3SA4**	**MX3SA4**	**N140TC**	3,600	4,540	660
21.0	4,010	2.9	81.3		**3/A 01 L2**	**BE90S4**	**BX90S4**	**ME3SA4**	**MX3SA4**	**N140TC**	3,510	4,160	640
22.0	3,960	1.5	80.2		**3/A 00 L2**	**BE90S4**	**BX90S4**	**ME3SA4**	**MX3SA4**	**N140TC**	3,490	4,410	640
23.0	3,660	2.8	74.2		**3/A 01 L2**	**BE90S4**	**BX90S4**	**ME3SA4**	**MX3SA4**	**N140TC**	3,410	4,050	620
25.0	3,500	1.6	71.0		**3/A 00 L2**	**BE90S4**	**BX90S4**	**ME3SA4**	**MX3SA4**	**N140TC**	3,370	4,250	610
28.0	3,020	1.9	61.2		**3/A 00 L2**	**BE90S4**	**BX90S4**	**ME3SA4**	**MX3SA4**	**N140TC**	3,220	4,070	580
32	2,670	2.7	54.2		**3/A 01 L2**	**BE90S4**	**BX90S4**	**ME3SA4**	**MX3SA4**	**N140TC**	3,110	3,690	560
34	2,560	1.9	51.8		**3/A 00 L2**	**BE90S4**	**BX90S4**	**ME3SA4**	**MX3SA4**	**N140TC**	3,060	3,870	550
42	2,050	2.2	41.5		**3/A 00 L2**	**BE90S4**	**BX90S4**	**ME3SA4**	**MX3SA4**	**N140TC**	2,870	3,620	510
43	1,980	2.7	40.1		**3/A 01 L2**	**BE90S4**	**BX90S4**	**ME3SA4**	**MX3SA4**	N140TC	2,840	3,370	510
44	1,950	2.3	39.6		**3/A 00 L2**	**BE90S4**	**BX90S4**	**ME3SA4**	**MX3SA4**	N140TC	2,830	3,570	500
55	1,560	2.3	31.7		**3/A 00 L2**	**BE90S4**	**BX90S4**	**ME3SA4**	**MX3SA4**	N140TC	2,640	3,340	470
74	1,150	2.3	23.4		**3/A 00 L2**	**BE90S4**	**BX90S4**	**ME3SA4**	**MX3SA4**	N140TC	2,420	3,050	420
91	940	2.3	19.1		**3/A 00 L2**	**BE90S4**	**BX90S4**	**ME3SA4**	**MX3SA4**	N140TC	2,270	2,870	400

P_1 = 2 hp

n_2 rpm	T_2 in•bs	S	i			IE2	IE3	IE2	IE3	NEMA	Rn_2 [lbs] NHC/HC NPC/PC	HZ/PZ	FZ
0.30	241,200	1.0	4959	**3/V 10 ML4**		**BE90LA4**	**BX90LA4**	**ME3SB4**	**MX3SB4**	**N140TC**	25,000	32,300	14,600
0.30	269,700	1.6	5326	**3/V 11 ML4**		**BE90LA4**	**BX90LA4**	**ME3SB4**	**MX3SB4**	**N140TC**	31,600	33,000	14,600
0.30	248,800	1.8	5046	**3/V 13 ML4**		**BE90LA4**	**BX90LA4**	**ME3SB4**	**MX3SB4**	**N140TC**	43,200	51,900	18,000
0.40	225,900	1.2	4036	**3/V 10 ML4**		**BE90LA4**	**BX90LA4**	**ME3SB4**	**MX3SB4**	**N140TC**	24,300	31,400	14,600
0.40	225,500	1.2	4637	**3/V 10 ML4**		**BE90LA4**	**BX90LA4**	**ME3SB4**	**MX3SB4**	**N140TC**	24,800	32,000	14,600
0.40	202,400	2.1	4106	**3/V 11 ML4**		**BE90LA4**	**BX90LA4**	**ME3SB4**	**MX3SB4**	**N140TC**	30,500	31,800	14,600
0.40	226,200	1.9	4410	**3/V 11 ML4**		**BE90LA4**	**BX90LA4**	**ME3SB4**	**MX3SB4**	**N140TC**	30,800	32,200	14,600
0.40	207,600	2.6	4046	**3/V 13 ML4**		**BE90LA4**	**BX90LA4**	**ME3SB4**	**MX3SB4**	**N140TC**	42,200	51,900	18,000
0.40	232,700	2.2	4536	**3/V 13 ML4**		**BE90LA4**	**BX90LA4**	**ME3SB4**	**MX3SB4**	**N140TC**	42,900	51,900	18,000
0.50	183,200	1.3	3273	**3/V 10 ML4**		**BE90LA4**	**BX90LA4**	**ME3SB4**	**MX3SB4**	**N140TC**	23,600	30,500	14,600
0.50	180,800	1.5	3570	**3/V 10 ML4**		**BE90LA4**	**BX90LA4**	**ME3SB4**	**MX3SB4**	**N140TC**	23,900	30,900	14,600
0.50	180,300	2.3	3222	**3/V 11 ML4**		**BE90LA4**	**BX90LA4**	**ME3SB4**	**MX3SB4**	**N140TC**	29,500	30,700	14,600
0.50	175,400	2.1	3557	**3/V 11 ML4**		**BE90LA4**	**BX90LA4**	**ME3SB4**	**MX3SB4**	**N140TC**	29,900	31,200	14,600
0.50	182,600	2.6	3263	**3/V 13 ML4**		**BE90LA4**	**BX90LA4**	**ME3SB4**	**MX3SB4**	**N140TC**	40,900	51,300	18,000
0.50	196,700	2.6	3515	**3/V 13 ML4**		**BE90LA4**	**BX90LA4**	**ME3SB4**	**MX3SB4**	**N140TC**	41,400	51,800	18,000
0.60	167,200	1.6	2987	**3/V 10 ML4**		**BE90LA4**	**BX90LA4**	**ME3SB4**	**MX3SB4**	**N140TC**	23,300	30,100	14,600
0.60	169,400	2.5	3063	**3/V 11 ML4**		**BE90LA4**	**BX90LA4**	**ME3SB4**	**MX3SB4**	**N140TC**	29,200	30,500	14,600
0.70	139,000	1.7	2455	**3/V 10 ML4**		**BE90LA4**	**BX90LA4**	**ME3SB4**	**MX3SB4**	**N140TC**	22,700	29,200	14,600
0.70	149,000	2.8	2663	**3/V 11 ML4**		**BE90LA4**	**BX90LA4**	**ME3SB4**	**MX3SB4**	**N140TC**	28,700	29,900	14,600
0.80	120,700	2.1	2156	**3/V 10 ML4**		**BE90LA4**	**BX90LA4**	**ME3SB4**	**MX3SB4**	**N140TC**	22,200	28,700	14,600
0.90	94,400	1.2	1964	**3/V 07 L3**		**BE90LA4**	**BX90LA4**	**ME3SB4**	**MX3SB4**	**N140TC**	18,700	25,400	10,100
0.90	103,800	2.3	1855	**3/V 10 ML4**		**BE90LA4**	**BX90LA4**	**ME3SB4**	**MX3SB4**	**N140TC**	21,800	28,100	14,600
0.90	112,800	2.3	2016	**3/V 10 ML4**		**BE90LA4**	**BX90LA4**	**ME3SB4**	**MX3SB4**	**N140TC**	22,000	28,400	14,600
1.0	60,800	1.1	1212	**3/V 06 L3**		**BE90LA4**	**BX90LA4**	**ME3SB4**	**MX3SB4**	**N140TC**	14,000	17,600	6,900
1.0	72,800	1.0	1395	**3/V 06 L3**		**BE90LA4**	**BX90LA4**	**ME3SB4**	**MX3SB4**	**N140TC**	14,200	18,000	7,230
1.0	61,300	1.5	1159	**3/V 07 L3**		**BE90LA4**	**BX90LA4**	**ME3SB4**	**MX3SB4**	**N140TC**	17,300	23,600	8,740
1.0	65,500	1.9	1288	**3/V 07 L3**		**BE90LA4**	**BX90LA4**	**ME3SB4**	**MX3SB4**	**N140TC**	17,600	24,000	9,050
1.0	71,700	1.5	1411	**3/V 07 L3**		**BE90LA4**	**BX90LA4**	**ME3SB4**	**MX3SB4**	**N140TC**	17,800	24,300	9,330

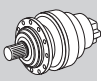

A

P_1 = 2 hp

n_2 rpm	T_2 in•bs	S	i			IE2	IE3	IE2	IE3	NEMA	Rn_2 [lbs] NHC/HC NPC/PC	HZ/PZ	FZ
1.0	80,700	1.2	1545	**3/V 07 L3**		**BE90LA4**	**BX90LA4**	**ME3SB4**	**MX3SB4**	**N140TC**	18,100	24,600	9,610
1.0	91,600	2.7	1617	**3/V 10 ML4**		**BE90LA4**	**BX90LA4**	**ME3SB4**	**MX3SB4**	**N140TC**	21,300	27,600	14,100
2.0	40,800	1.6	698	**3/V 06 L3**		**BE90LA4**	**BX90LA4**	**ME3SB4**	**MX3SB4**	**N140TC**	12,900	16,300	5,740
2.0	41,300	1.6	791	**3/V 06 L3**		**BE90LA4**	**BX90LA4**	**ME3SB4**	**MX3SB4**	**N140TC**	13,100	16,600	5,980
2.0	53,700	1.3	930	**3/V 06 L3**		**BE90LA4**	**BX90LA4**	**ME3SB4**	**MX3SB4**	**N140TC**	13,400	16,900	6,310
2.0	51,800	1.6	992	**3/V 06 L3**		**BE90LA4**	**BX90LA4**	**ME3SB4**	**MX3SB4**	**N140TC**	13,600	17,100	6,450
2.0	60,200	1.2	1153	**3/V 06 L3**		**BE90LA4**	**BX90LA4**	**ME3SB4**	**MX3SB4**	**N140TC**	13,900	17,500	6,780
2.0	44,600	1.9	773	**3/V 07 L3**		**BE90LA4**	**BX90LA4**	**ME3SB4**	**MX3SB4**	**N140TC**	16,400	22,300	7,630
2.0	48,700	2.2	920	**3/V 07 L3**		**BE90LA4**	**BX90LA4**	**ME3SB4**	**MX3SB4**	**N140TC**	16,800	22,800	8,090
2.0	53,000	2.4	1015	**3/V 07 L3**		**BE90LA4**	**BX90LA4**	**ME3SB4**	**MX3SB4**	**N140TC**	17,000	23,100	8,360
3.0	33,600	1.8	505		**3/A 06 L2**	**BE90LA4**	**BX90LA4**	**ME3SB4**	**MX3SB4**	**N140TC**	12,300	15,500	5,150
3.0	36,900	1.7	555		**3/A 06 L2**	**BE90LA4**	**BX90LA4**	**ME3SB4**	**MX3SB4**	**N140TC**	12,500	15,700	5,320
3.0	40,700	1.3	611		**3/A 06 L2**	**BE90LA4**	**BX90LA4**	**ME3SB4**	**MX3SB4**	**N140TC**	12,700	16,000	5,490
3.0	44,700	1.2	671		**3/A 06 L2**	**BE90LA4**	**BX90LA4**	**ME3SB4**	**MX3SB4**	**N140TC**	12,800	16,200	5,660
3.0	24,800	1.1	501	**3/V 04 L3**		**BE90LA4**	**BX90LA4**	**ME3SB4**	**MX3SB4**	**N140TC**	8,960	11,300	3,520
3.0	32,900	0.9	623	**3/V 04 L3**		**BE90LA4**	**BX90LA4**	**ME3SB4**	**MX3SB4**	**N140TC**	9,240	11,700	3,790
3.0	30,200	1.1	529	**3/V 05 L3**		**BE90LA4**	**BX90LA4**	**ME3SB4**	**MX3SB4**	**N140TC**	9,020	11,400	3,590
3.0	33,600	1.3	576	**3/V 05 L3**		**BE90LA4**	**BX90LA4**	**ME3SB4**	**MX3SB4**	**N140TC**	9,140	11,500	3,690
3.0	32,900	1.2	623	**3/V 05 L3**		**BE90LA4**	**BX90LA4**	**ME3SB4**	**MX3SB4**	**N140TC**	9,240	11,700	3,790
3.0	30,400	2.2	527	**3/V 06 L3**		**BE90LA4**	**BX90LA4**	**ME3SB4**	**MX3SB4**	**N140TC**	12,400	15,600	5,220
3.0	32,800	2.3	569	**3/V 06 L3**		**BE90LA4**	**BX90LA4**	**ME3SB4**	**MX3SB4**	**N140TC**	12,500	15,800	5,360
3.0	38,100	2.1	661	**3/V 06 L3**		**BE90LA4**	**BX90LA4**	**ME3SB4**	**MX3SB4**	**N140TC**	12,800	16,100	5,640
4.0	27,100	1.0	398		**3/A 05 L2**	**BE90LA4**	**BX90LA4**	**ME3SB4**	**MX3SB4**	**N140TC**	8,670	10,900	3,260
4.0	28,700	1.3	422		**3/A 05 L2**	**BE90LA4**	**BX90LA4**	**ME3SB4**	**MX3SB4**	**N140TC**	8,740	11,000	3,330
4.0	33,400	1.0	491		**3/A 05 L2**	**BE90LA4**	**BX90LA4**	**ME3SB4**	**MX3SB4**	**N140TC**	8,930	11,300	3,500
4.0	25,800	1.9	388		**3/A 06 L2**	**BE90LA4**	**BX90LA4**	**ME3SB4**	**MX3SB4**	**N140TC**	11,900	15,000	4,720
4.0	29,000	2.4	435		**3/A 06 L2**	**BE90LA4**	**BX90LA4**	**ME3SB4**	**MX3SB4**	**N140TC**	12,100	15,200	4,900
4.0	27,000	2.9	405		**3/A 07 L2**	**BE90LA4**	**BX90LA4**	**ME3SB4**	**MX3SB4**	**N140TC**	14,900	20,300	6,150
4.0	29,200	2.7	439		**3/A 07 L2**	**BE90LA4**	**BX90LA4**	**ME3SB4**	**MX3SB4**	**N140TC**	15,100	20,500	6,320
4.0	24,900	1.3	453	**3/V 04 L3**		**BE90LA4**	**BX90LA4**	**ME3SB4**	**MX3SB4**	**N140TC**	8,830	11,200	3,410
4.0	23,100	1.4	396	**3/V 05 L3**		**BE90LA4**	**BX90LA4**	**ME3SB4**	**MX3SB4**	**N140TC**	8,660	10,900	3,260
4.0	27,000	1.5	462	**3/V 05 L3**		**BE90LA4**	**BX90LA4**	**ME3SB4**	**MX3SB4**	**N140TC**	8,850	11,200	3,430
4.0	23,100	2.9	395	**3/V 06 L3**		**BE90LA4**	**BX90LA4**	**ME3SB4**	**MX3SB4**	**N140TC**	11,900	15,000	4,750
5.0	21,500	1.0	317		**3/A 04 L2**	**BE90LA4**	**BX90LA4**	**ME3SB4**	**MX3SB4**	**N140TC**	8,540	10,800	3,030
5.0	22,400	1.4	329		**3/A 05 L2**	**BE90LA4**	**BX90LA4**	**ME3SB4**	**MX3SB4**	**N140TC**	8,540	10,800	3,060
5.0	21,400	2.7	321		**3/A 06 L2**	**BE90LA4**	**BX90LA4**	**ME3SB4**	**MX3SB4**	**N140TC**	11,700	14,800	4,430
5.0	25,300	2.2	380		**3/A 06 L2**	**BE90LA4**	**BX90LA4**	**ME3SB4**	**MX3SB4**	**N140TC**	11,800	14,900	4,690
5.0	21,100	1.5	384	**3/V 04 L3**		**BE90LA4**	**BX90LA4**	**ME3SB4**	**MX3SB4**	**N140TC**	8,620	10,900	3,220
6.0	19,200	1.3	283		**3/A 04 L2**	**BE90LA4**	**BX90LA4**	**ME3SB4**	**MX3SB4**	**N140TC**	8,540	10,800	2,910
6.0	19,000	1.7	280		**3/A 05 L2**	**BE90LA4**	**BX90LA4**	**ME3SB4**	**MX3SB4**	**N140TC**	8,540	10,800	2,900
6.0	17,800	2.7	267		**3/A 06 L2**	**BE90LA4**	**BX90LA4**	**ME3SB4**	**MX3SB4**	**N140TC**	11,700	14,800	4,170
7.0	17,000	1.8	250		**3/A 04 L2**	**BE90LA4**	**BX90LA4**	**ME3SB4**	**MX3SB4**	**N140TC**	8,540	10,800	2,790
7.0	16,400	2.3	241		**3/A 05 L2**	**BE90LA4**	**BX90LA4**	**ME3SB4**	**MX3SB4**	**N140TC**	8,540	10,800	2,760
8.0	15,000	1.0	220		**3/A 03 L2**	**BE90LA4**	**BX90LA4**	**ME3SB4**	**MX3SB4**	**N140TC**	8,540	10,800	2,680
8.0	13,900	1.8	205		**3/A 04 L2**	**BE90LA4**	**BX90LA4**	**ME3SB4**	**MX3SB4**	**N140TC**	8,540	10,800	2,620
8.0	15,400	2.0	226		**3/A 04 L2**	**BE90LA4**	**BX90LA4**	**ME3SB4**	**MX3SB4**	**N140TC**	8,540	10,800	2,700
8.0	14,400	1.9	212		**3/A 05 L2**	**BE90LA4**	**BX90LA4**	**ME3SB4**	**MX3SB4**	**N140TC**	8,540	10,800	2,650
10.0	11,300	0.9	166		**3/A 01 L2**	**BE90LA4**	**BX90LA4**	**ME3SB4**	**MX3SB4**	**N140TC**	4,350	5,160	810
10.0	12,400	1.3	182		**3/A 03 L2**	**BE90LA4**	**BX90LA4**	**ME3SB4**	**MX3SB4**	**N140TC**	8,540	10,800	2,510
10.0	11,800	2.2	174		**3/A 04 L2**	**BE90LA4**	**BX90LA4**	**ME3SB4**	**MX3SB4**	**N140TC**	8,450	10,700	2,480
10.0	11,900	2.7	175		**3/A 05 L2**	**BE90LA4**	**BX90LA4**	**ME3SB4**	**MX3SB4**	**N140TC**	8,480	10,700	2,480
11.0	11,000	2.3	162		**3/A 04 L2**	**BE90LA4**	**BX90LA4**	**ME3SB4**	**MX3SB4**	**N140TC**	8,280	10,500	2,420
11.0	11,000	2.3	162		**3/A 05 L2**	**BE90LA4**	**BX90LA4**	**ME3SB4**	**MX3SB4**	**N140TC**	8,280	10,500	2,420

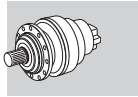

A

P_1 = 2 hp

n_2 rpm	T_2 in•bs	S	i			IE2	IE3	IE2	IE3	NEMA	Rn_2 [lbs] NHC/HC NPC/PC	HZ/PZ	FZ
12.0	10,100	2.1	149		**3/A 04 L2**	**BE90LA4**	**BX90LA4**	**ME3SB4**	**MX3SB4**	**N140TC**	8,070	10,200	2,350
13.0	9,040	1.3	133		**3/A 01 L2**	**BE90LA4**	**BX90LA4**	**ME3SB4**	**MX3SB4**	**N140TC**	4,070	4,830	760
13.0	8,770	2.7	129		**3/A 04 L2**	**BE90LA4**	**BX90LA4**	**ME3SB4**	**MX3SB4**	**N140TC**	7,730	9,770	2,240
15.0	7,950	2.7	117		**3/A 04 L2**	**BE90LA4**	**BX90LA4**	**ME3SB4**	**MX3SB4**	**N140TC**	7,510	9,480	2,170
17.0	6,930	1.5	102		**3/A 01 L2**	**BE90LA4**	**BX90LA4**	**ME3SB4**	**MX3SB4**	**N140TC**	3,750	4,450	690
18.0	6,590	2.3	96.9		**3/A 03 L2**	**BE90LA4**	**BX90LA4**	**ME3SB4**	**MX3SB4**	**N140TC**	7,090	8,960	2,040
20.0	6,020	2.4	88.5		**3/A 03 L2**	**BE90LA4**	**BX90LA4**	**ME3SB4**	**MX3SB4**	**N140TC**	6,900	8,720	1,980
21.0	5,530	2.1	81.3		**3/A 01 L2**	**BE90LA4**	**BX90LA4**	**ME3SB4**	**MX3SB4**	**N140TC**	3,510	4,160	640
22.0	5,450	1.1	80.2		**3/A 00 L2**	**BE90LA4**	**BX90LA4**	**ME3SB4**	**MX3SB4**	**N140TC**	3,490	4,410	640
23.0	5,040	2.0	74.2		**3/A 01 L2**	**BE90LA4**	**BX90LA4**	**ME3SB4**	**MX3SB4**	**N140TC**	3,410	4,050	620
24.0	4,830	1.2	71.0		**3/A 00 L2**	**BE90LA4**	**BX90LA4**	**ME3SB4**	**MX3SB4**	**N140TC**	3,370	4,250	610
28.0	4,160	1.4	61.2		**3/A 00 L2**	**BE90LA4**	**BX90LA4**	**ME3SB4**	**MX3SB4**	**N140TC**	3,220	4,070	580
29.0	4,040	2.7	59.4		**3/A 01 L2**	**BE90LA4**	**BX90LA4**	**ME3SB4**	**MX3SB4**	**N140TC**	3,190	3,790	580
32	3,680	1.9	54.2		**3/A 01 L2**	**BE90LA4**	**BX90LA4**	**ME3SB4**	**MX3SB4**	**N140TC**	3,110	3,690	560
33	3,520	1.4	51.8		**3/A 00 L2**	**BE90LA4**	**BX90LA4**	**ME3SB4**	**MX3SB4**	**N140TC**	3,060	3,870	550
35	3,340	2.2	49.1		**3/A 01 L2**	**BE90LA4**	**BX90LA4**	**ME3SB4**	**MX3SB4**	**N140TC**	3,010	3,580	540
40	2,980	2.8	43.9		**3/A 01 L2**	**BE90LA4**	**BX90LA4**	**ME3SB4**	**MX3SB4**	**N140TC**	2,920	3,460	520
42	2,820	1.6	41.5		**3/A 00 L2**	**BE90LA4**	**BX90LA4**	**ME3SB4**	**MX3SB4**	**N140TC**	2,870	3,620	510
43	2,730	1.9	40.1		**3/A 01 L2**	**BE90LA4**	**BX90LA4**	**ME3SB4**	**MX3SB4**	**N140TC**	2,840	3,370	510
44	2,690	1.7	39.6		**3/A 00 L2**	**BE90LA4**	**BX90LA4**	**ME3SB4**	**MX3SB4**	**N140TC**	2,830	3,570	500
48	2,430	2.8	35.8		**3/A 01 L2**	**BE90LA4**	**BX90LA4**	**ME3SB4**	**MX3SB4**	**N140TC**	2,740	3,260	490
55	2,150	1.7	31.7		**3/A 00 L2**	**BE90LA4**	**BX90LA4**	**ME3SB4**	**MX3SB4**	**N140TC**	2,640	3,340	470
56	2,120	2.7	31.2		**3/A 01 L2**	**BE90LA4**	**BX90LA4**	**ME3SB4**	**MX3SB4**	**N140TC**	2,630	3,120	470
74	1,590	1.7	23.4		**3/A 00 L2**	**BE90LA4**	**BX90LA4**	**ME3SB4**	**MX3SB4**	**N140TC**	2,420	3,050	420
75	1,560	2.7	23.0		**3/A 01 L2**	**BE90LA4**	**BX90LA4**	**ME3SB4**	**MX3SB4**	**N140TC**	2,400	2,850	420
91	1,300	1.7	19.1		**3/A 00 L2**	**BE90LA4**	**BX90LA4**	**ME3SB4**	**MX3SB4**	**N140TC**	2,270	2,870	400
92	1,280	2.7	18.8		**3/A 01 L2**	**BE90LA4**	**BX90LA4**	**ME3SB4**	**MX3SB4**	**N140TC**	2,260	2,680	390

P_1 = 3 hp

n_2 rpm	T_2 in•bs	S	i			IE2	IE3	IE2	IE3	NEMA	Rn_2 [lbs] NHC/HC NPC/PC	HZ/PZ	FZ
0.30	391,600	1.1	5326	**3/V 11 ML4**		**BE100LA4**	**BX100LA4**	**ME3LA4**	**MX3LA4**		31,600	33,000	14,600
0.30	361,200	1.2	5046	**3/V 13 ML4**		**BE100LA4**	**BX100LA4**	**ME3LA4**	**MX3LA4**		43,200	51,900	18,000
0.30	405,100	2.0	5234	**3/V 15 ML4**		**BE100LA4**	**BX100LA4**				42,700	52,200	20,200
0.40	293,900	1.5	4106	**3/V 11 ML4**		**BE100LA4**	**BX100LA4**	**ME3LA4**	**MX3LA4**		30,500	31,800	14,600
0.40	328,500	1.3	4410	**3/V 11 ML4**		**BE100LA4**	**BX100LA4**	**ME3LA4**	**MX3LA4**		30,800	32,200	14,600
0.40	301,400	1.8	4046	**3/V 13 ML4**		**BE100LA4**	**BX100LA4**	**ME3LA4**	**MX3LA4**		42,200	51,900	18,000
0.40	337,900	1.5	4536	**3/V 13 ML4**		**BE100LA4**	**BX100LA4**	**ME3LA4**	**MX3LA4**		42,900	51,900	18,000
0.40	320,600	2.0	3993	**3/V 14 ML4**		**BE100LA4**	**BX100LA4**				41,100	50,200	20,200
0.40	321,200	2.2	4312	**3/V 14 ML4**		**BE100LA4**	**BX100LA4**				41,600	50,700	20,200
0.40	369,400	1.9	4959	**3/V 14 ML4**		**BE100LA4**	**BX100LA4**				42,400	51,800	20,200
0.40	322,800	2.8	4151	**3/V 15 ML4**		**BE100LA4**	**BX100LA4**				41,400	50,500	20,200
0.40	383,100	2.3	4950	**3/V 15 ML4**		**BE100LA4**	**BX100LA4**				42,400	51,700	20,200
0.40	383,100	2.7	4950	**3/V 16 ML4**		**BE100LA4**	**BX100LA4**				66,000	74,100	33,700
0.50	266,000	0.9	3273	**3/V 10 ML4**		**BE100LA4**	**BX100LA4**	**ME3LA4**	**MX3LA4**		23,600	30,500	14,600
0.50	262,500	1.0	3570	**3/V 10 ML4**		**BE100LA4**	**BX100LA4**	**ME3LA4**	**MX3LA4**		23,900	30,900	14,600
0.50	261,800	1.6	3222	**3/V 11 ML4**		**BE100LA4**	**BX100LA4**	**ME3LA4**	**MX3LA4**		29,500	30,700	14,600
0.50	254,600	1.5	3557	**3/V 11 ML4**		**BE100LA4**	**BX100LA4**	**ME3LA4**	**MX3LA4**		29,900	31,200	14,600

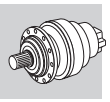

A

P_1 = 3 hp

n_2 rpm	T_2 in•bs	S	i			IE2	IE3	IE2	IE3	NEMA	Rn_2 [lbs] NHC/HC NPC/PC	HZ/PZ	FZ
0.50	265,200	1.8	3263	**3/V 13 ML4**		**BE100LA4**	**BX100LA4**	**ME3LA4**	**MX3LA4**		40,900	51,300	18,000
0.50	285,600	1.8	3515	**3/V 13 ML4**		**BE100LA4**	**BX100LA4**	**ME3LA4**	**MX3LA4**		41,400	51,800	18,000
0.60	242,700	1.1	2987	**3/V 10 ML4**		**BE100LA4**	**BX100LA4**	**ME3LA4**	**MX3LA4**		23,300	30,100	14,600
0.60	245,900	1.7	3063	**3/V 11 ML4**		**BE100LA4**	**BX100LA4**	**ME3LA4**	**MX3LA4**		29,200	30,500	14,600
0.60	206,600	2.5	2773	**3/V 13 ML4**		**BE100LA4**	**BX100LA4**	**ME3LA4**	**MX3LA4**		40,000	50,100	18,000
0.60	255,500	2.7	3182	**3/V 14 ML4**		**BE100LA4**	**BX100LA4**				39,800	48,600	20,200
0.70	201,900	1.2	2455	**3/V 10 ML4**		**BE100LA4**	**BX100LA4**	**ME3LA4**	**MX3LA4**		22,700	29,200	14,600
0.70	216,400	2.0	2663	**3/V 11 ML4**		**BE100LA4**	**BX100LA4**	**ME3LA4**	**MX3LA4**		28,700	29,900	14,600
0.70	179,300	2.0	2430	**3/V 13 ML3**		**BE100LA4**	**BX100LA4**				39,200	49,100	18,000
0.80	165,100	0.9	2150	**3/V 09 L3**		**BE100LA4**	**BX100LA4**				18,900	25,800	8,090
0.80	175,200	1.4	2156	**3/V 10 ML4**		**BE100LA4**	**BX100LA4**	**ME3LA4**	**MX3LA4**		22,200	28,700	14,600
0.80	171,900	1.9	2329	**3/V 11 ML3**		**BE100LA4**	**BX100LA4**				28,100	29,400	14,600
0.90	150,700	1.6	1855	**3/V 10 ML4**		**BE100LA4**	**BX100LA4**	**ME3LA4**	**MX3LA4**		21,800	28,100	14,600
0.90	163,800	1.6	2016	**3/V 10 ML4**		**BE100LA4**	**BX100LA4**	**ME3LA4**	**MX3LA4**		22,000	28,400	14,600
0.90	144,900	2.5	1963	**3/V 11 ML3**		**BE100LA4**	**BX100LA4**				27,400	28,600	14,600
1.0	95,100	1.3	1288	**3/V 07 L3**		**BE100LA4**	**BX100LA4**	**ME3LA4**	**MX3LA4**		17,600	24,000	9,050
1.0	104,100	1.0	1411	**3/V 07 L3**		**BE100LA4**	**BX100LA4**	**ME3LA4**	**MX3LA4**		17,800	24,300	9,330
1.0	98,900	1.9	1288	**3/V 09 L3**		**BE100LA4**	**BX100LA4**				17,600	24,000	7,240
1.0	115,000	1.4	1497	**3/V 09 L3**		**BE100LA4**	**BX100LA4**				18,000	24,500	7,610
1.0	116,500	1.1	1623	**3/V 09 L3**		**BE100LA4**	**BX100LA4**				18,200	24,800	7,820
1.0	128,700	1.5	1792	**3/V 09 L3**		**BE100LA4**	**BX100LA4**				18,500	25,100	8,080
1.0	94,200	1.8	1227	**3/V 10 ML3**		**BE100LA4**	**BX100LA4**				20,500	26,500	12,900
1.0	108,400	1.6	1411	**3/V 10 ML3**		**BE100LA4**	**BX100LA4**				20,900	27,000	13,500
1.0	133,000	1.9	1617	**3/V 10 ML4**		**BE100LA4**	**BX100LA4**	**ME3LA4**	**MX3LA4**		21,300	27,600	14,100
1.0	124,000	2.9	1636	**3/V 11 ML3**		**BE100LA4**	**BX100LA4**				26,700	27,900	14,200
2.0	60,000	1.1	791	**3/V 06 L3**		**BE100LA4**	**BX100LA4**	**ME3LA4**	**MX3LA4**		13,100	16,600	5,980
2.0	75,200	1.1	992	**3/V 06 L3**		**BE100LA4**	**BX100LA4**	**ME3LA4**	**MX3LA4**		13,600	17,100	6,450
2.0	58,400	2.1	761	**3/V 07 L3**		**BE100LA4**	**BX100LA4**	**ME3LA4**	**MX3LA4**		16,300	22,200	7,590
2.0	64,800	1.3	773	**3/V 07 L3**		**BE100LA4**	**BX100LA4**	**ME3LA4**	**MX3LA4**		16,400	22,300	7,630
2.0	70,700	1.5	920	**3/V 07 L3**		**BE100LA4**	**BX100LA4**	**ME3LA4**	**MX3LA4**		16,800	22,800	8,090
2.0	76,900	1.6	1015	**3/V 07 L3**		**BE100LA4**	**BX100LA4**	**ME3LA4**	**MX3LA4**		17,000	23,100	8,360
2.0	89,000	1.0	1159	**3/V 07 L3**		**BE100LA4**	**BX100LA4**	**ME3LA4**	**MX3LA4**		17,300	23,600	8,740
2.0	60,700	2.1	761	**3/V 09 L3**		**BE100LA4**	**BX100LA4**				16,300	22,200	6,070
2.0	67,000	2.6	840	**3/V 09 L3**		**BE100LA4**	**BX100LA4**				16,600	22,500	6,280
2.0	77,100	2.1	1004	**3/V 09 L3**		**BE100LA4**	**BX100LA4**				17,000	23,100	6,660
2.0	92,500	1.5	1159	**3/V 09 L3**		**BE100LA4**	**BX100LA4**				17,300	23,600	6,990
2.0	73,400	2.3	920	**3/V 10 ML3**		**BE100LA4**	**BX100LA4**				19,700	25,400	11,700
2.0	86,000	2.9	1120	**3/V 10 ML3**		**BE100LA4**	**BX100LA4**				20,300	26,100	12,500
3.0	48,800	1.3	505		**3/A 06 L2**	**BE100LA4**	**BX100LA4**	**ME3LA4**	**MX3LA4**		12,300	15,500	5,150
3.0	53,600	1.2	555		**3/A 06 L2**	**BE100LA4**	**BX100LA4**	**ME3LA4**	**MX3LA4**		12,500	15,700	5,320
3.0	44,200	1.5	527	**3/V 06 L3**		**BE100LA4**	**BX100LA4**	**ME3LA4**	**MX3LA4**		12,400	15,600	5,220
3.0	47,700	1.6	569	**3/V 06 L3**		**BE100LA4**	**BX100LA4**	**ME3LA4**	**MX3LA4**		12,500	15,800	5,360
3.0	55,400	1.5	661	**3/V 06 L3**		**BE100LA4**	**BX100LA4**	**ME3LA4**	**MX3LA4**		12,800	16,100	5,640
3.0	59,200	1.1	698	**3/V 06 L3**		**BE100LA4**	**BX100LA4**	**ME3LA4**	**MX3LA4**		12,900	16,300	5,740
3.0	42,500	2.8	507	**3/V 07 L3**		**BE100LA4**	**BX100LA4**	**ME3LA4**	**MX3LA4**		15,400	21,000	6,630
3.0	50,300	2.5	655	**3/V 07 L3**		**BE100LA4**	**BX100LA4**	**ME3LA4**	**MX3LA4**		16,000	21,700	7,220
3.0	52,300	3.0	655	**3/V 09 L3**		**BE100LA4**	**BX100LA4**				16,000	21,700	5,780
4.0	42,000	1.6	435		**3/A 06 L2**	**BE100LA4**	**BX100LA4**	**ME3LA4**	**MX3LA4**		12,100	15,200	4,900
4.0	39,100	2.0	405		**3/A 07 L2**	**BE100LA4**	**BX100LA4**	**ME3LA4**	**MX3LA4**		14,900	20,300	6,150
4.0	42,400	1.9	439		**3/A 07 L2**	**BE100LA4**	**BX100LA4**	**ME3LA4**	**MX3LA4**		15,100	20,500	6,320
4.0	36,100	0.9	453	**3/V 04 L3**		**BE100LA4**	**BX100LA4**	**ME3LA4**	**MX3LA4**		8,830	11,200	3,410
4.0	33,600	1.0	396	**3/V 05 L3**		**BE100LA4**	**BX100LA4**	**ME3LA4**	**MX3LA4**		8,660	10,900	3,260
4.0	39,200	1.1	462	**3/V 05 L3**		**BE100LA4**	**BX100LA4**	**ME3LA4**	**MX3LA4**		8,850	11,200	3,430
4.0	33,500	2.0	395	**3/V 06 L3**		**BE100LA4**	**BX100LA4**	**ME3LA4**	**MX3LA4**		11,900	15,000	4,750

Bonfiglioli Riduttori

P_1 = 3 hp

n_2 rpm	T_2 in•bs	S	i			IE2	IE3	IE2	IE3	NEMA	Rn_2 [lbs] NHC/HC NPC/PC	HZ/PZ	FZ
4.0	36,200	2.1	427	**3/V 06 L3**		**BE100LA4**	**BX100LA4**	**ME3LA4**	**MX3LA4**		12,000	15,200	4,870
4.0	38,500	2.8	460	**3/V 07 L3**		**BE100LA4**	**BX100LA4**	**ME3LA4**	**MX3LA4**		15,200	20,700	6,420
5.0	32,500	1.0	329		**3/A 05 L2**	**BE100LA4**	**BX100LA4**	**ME3LA4**	**MX3LA4**		8,540	10,800	3,060
5.0	31,000	1.9	321		**3/A 06 L2**	**BE100LA4**	**BX100LA4**	**ME3LA4**	**MX3LA4**		11,700	14,800	4,430
5.0	37,500	1.3	388		**3/A 06 L2**	**BE100LA4**	**BX100LA4**	**ME3LA4**	**MX3LA4**		11,900	15,000	4,720
5.0	36,700	1.5	380		**3/A 06 L2**	**BE100LA4**	**BX100LA4**	**ME3LA4**	**MX3LA4**		11,800	14,900	4,690
5.0	30,600	1.0	384	**3/V 04 L3**		**BE100LA4**	**BX100LA4**	**ME3LA4**	**MX3LA4**		8,620	10,900	3,220
5.0	33,500	2.3	386	**3/V 07 L3**		**BE100LA4**	**BX100LA4**	**ME3LA4**	**MX3LA4**		14,800	20,200	6,060
6.0	27,900	0.9	283		**3/A 04 L2**	**BE100LA4**	**BX100LA4**	**ME3LA4**	**MX3LA4**		8,540	10,800	2,910
6.0	27,600	1.2	280		**3/A 05 L2**	**BE100LA4**	**BX100LA4**	**ME3LA4**	**MX3LA4**		8,540	10,800	2,900
6.0	26,700	2.6	276		**3/A 06 L2**	**BE100LA4**	**BX100LA4**	**ME3LA4**	**MX3LA4**		11,700	14,800	4,210
6.0	27,300	2.8	282		**3/A 07 L2**	**BE100LA4**	**BX100LA4**	**ME3LA4**	**MX3LA4**		14,700	20,000	5,450
7.0	24,700	1.3	250		**3/A 04 L2**	**BE100LA4**	**BX100LA4**	**ME3LA4**	**MX3LA4**		8,540	10,800	2,790
7.0	23,800	1.6	241		**3/A 05 L2**	**BE100LA4**	**BX100LA4**	**ME3LA4**	**MX3LA4**		8,540	10,800	2,760
7.0	25,800	1.9	267		**3/A 06 L2**	**BE100LA4**	**BX100LA4**	**ME3LA4**	**MX3LA4**		11,700	14,800	4,170
8.0	22,300	1.4	226		**3/A 04 L2**	**BE100LA4**	**BX100LA4**	**ME3LA4**	**MX3LA4**		8,540	10,800	2,700
8.0	20,900	1.3	212		**3/A 05 L2**	**BE100LA4**	**BX100LA4**	**ME3LA4**	**MX3LA4**		8,540	10,800	2,650
8.0	21,400	2.7	221		**3/A 06 L2**	**BE100LA4**	**BX100LA4**	**ME3LA4**	**MX3LA4**		11,700	14,800	3,910
9.0	20,200	1.3	205		**3/A 04 L2**	**BE100LA4**	**BX100LA4**	**ME3LA4**	**MX3LA4**		8,540	10,800	2,620
9.0	19,100	2.5	198		**3/A 06 L2**	**BE100LA4**	**BX100LA4**	**ME3LA4**	**MX3LA4**		11,700	14,800	3,770
10.0	17,200	1.5	174		**3/A 04 L2**	**BE100LA4**	**BX100LA4**	**ME3LA4**	**MX3LA4**		8,450	10,700	2,480
10.0	17,300	1.8	175		**3/A 05 L2**	**BE100LA4**	**BX100LA4**	**ME3LA4**	**MX3LA4**		8,480	10,700	2,480
11.0	16,000	1.6	162		**3/A 04 L2**	**BE100LA4**	**BX100LA4**	**ME3LA4**	**MX3LA4**		8,280	10,500	2,420
11.0	16,000	1.6	162		**3/A 05 L2**	**BE100LA4**	**BX100LA4**	**ME3LA4**	**MX3LA4**		8,280	10,500	2,420
12.0	14,700	1.4	149		**3/A 04 L2**	**BE100LA4**	**BX100LA4**	**ME3LA4**	**MX3LA4**		8,070	10,200	2,350
12.0	13,900	2.3	141		**3/A 05 L2**	**BE100LA4**	**BX100LA4**	**ME3LA4**	**MX3LA4**		7,930	10,000	2,310
14.0	12,700	1.9	129		**3/A 04 L2**	**BE100LA4**	**BX100LA4**	**ME3LA4**	**MX3LA4**		7,730	9,770	2,240
15.0	11,500	1.8	117		**3/A 04 L2**	**BE100LA4**	**BX100LA4**	**ME3LA4**	**MX3LA4**		7,510	9,480	2,170
15.0	11,900	2.6	121		**3/A 05 L2**	**BE100LA4**	**BX100LA4**	**ME3LA4**	**MX3LA4**		7,580	9,580	2,190
17.0	10,100	1.0	102		**3/A 01 L2**	**BE100LA4**	**BX100LA4**	**ME3LA4**	**MX3LA4**		3,750	4,450	690
17.0	10,100	2.2	102		**3/A 04 L2**	**BE100LA4**	**BX100LA4**	**ME3LA4**	**MX3LA4**		7,200	9,100	2,070
17.0	10,300	2.6	104		**3/A 05 L2**	**BE100LA4**	**BX100LA4**	**ME3LA4**	**MX3LA4**		7,240	9,140	2,080
18.0	9,560	1.6	96.9		**3/A 03 L2**	**BE100LA4**	**BX100LA4**	**ME3LA4**	**MX3LA4**		7,090	8,960	2,040
19.0	8,950	2.4	90.7		**3/A 04 L2**	**BE100LA4**	**BX100LA4**	**ME3LA4**	**MX3LA4**		6,950	8,780	1,990
20.0	8,740	1.7	88.5		**3/A 03 L2**	**BE100LA4**	**BX100LA4**	**ME3LA4**	**MX3LA4**		6,900	8,720	1,980
22.0	8,020	1.4	81.3		**3/A 01 L2**	**BE100LA4**	**BX100LA4**	**ME3LA4**	**MX3LA4**		3,510	4,160	640
22.0	8,060	2.6	81.7		**3/A 04 L2**	**BE100LA4**	**BX100LA4**	**ME3LA4**	**MX3LA4**		6,740	8,510	1,920
24.0	7,320	1.4	74.2		**3/A 01 L2**	**BE100LA4**	**BX100LA4**	**ME3LA4**	**MX3LA4**		3,410	4,050	620
24.0	7,230	2.1	73.2		**3/A 03 L2**	**BE100LA4**	**BX100LA4**	**ME3LA4**	**MX3LA4**		6,520	8,240	1,860
28.0	6,210	2.1	62.9		**3/A 03 L2**	**BE100LA4**	**BX100LA4**	**ME3LA4**	**MX3LA4**		6,230	7,870	1,760
29.0	6,040	1.0	61.2		**3/A 00 L2**	**BE100LA4**	**BX100LA4**	**ME3LA4**	**MX3LA4**		3,220	4,070	580
30	5,860	1.9	59.4		**3/A 01 L2**	**BE100LA4**	**BX100LA4**	**ME3LA4**	**MX3LA4**		3,190	3,790	580
32	5,350	1.3	54.2		**3/A 01 L2**	**BE100LA4**	**BX100LA4**	**ME3LA4**	**MX3LA4**		3,110	3,690	560
34	5,110	1.0	51.8		**3/A 00 L2**	**BE100LA4**	**BX100LA4**	**ME3LA4**	**MX3LA4**		3,060	3,870	550
34	5,180	2.8	52.5		**3/A 03 L2**	**BE100LA4**	**BX100LA4**	**ME3LA4**	**MX3LA4**		5,900	7,460	1,660
36	4,850	1.5	49.1		**3/A 01 L2**	**BE100LA4**	**BX100LA4**	**ME3LA4**	**MX3LA4**		3,010	3,580	540
40	4,330	1.9	43.9		**3/A 01 L2**	**BE100LA4**	**BX100LA4**	**ME3LA4**	**MX3LA4**		2,920	3,460	520
42	4,100	1.1	41.5		**3/A 00 L2**	**BE100LA4**	**BX100LA4**	**ME3LA4**	**MX3LA4**		2,870	3,620	510
44	3,910	1.2	39.6		**3/A 00 L2**	**BE100LA4**	**BX100LA4**	**ME3LA4**	**MX3LA4**		2,830	3,570	500
44	3,960	1.3	40.1		**3/A 01 L2**	**BE100LA4**	**BX100LA4**	**ME3LA4**	**MX3LA4**		2,840	3,370	510
49	3,530	1.9	35.8		**3/A 01 L2**	**BE100LA4**	**BX100LA4**	**ME3LA4**	**MX3LA4**		2,740	3,260	490
56	3,130	1.2	31.7		**3/A 00 L2**	**BE100LA4**	**BX100LA4**	**ME3LA4**	**MX3LA4**		2,640	3,340	470
56	3,080	1.8	31.2		**3/A 01 L2**	**BE100LA4**	**BX100LA4**	**ME3LA4**	**MX3LA4**		2,630	3,120	470
75	2,310	1.2	23.4		**3/A 00 L2**	**BE100LA4**	**BX100LA4**	**ME3LA4**	**MX3LA4**		2,420	3,050	420

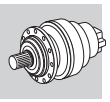

A

P_1 = 3 hp

n_2 rpm	T_2 in•bs	S	i			IE2	IE3	IE2	IE3	NEMA	Rn_2 [lbs] NHC/HC NPC/PC	HZ/PZ	FZ
77	2,270	1.8	23.0		**3/A 01 L2**	**BE100LA4**	**BX100LA4**	**ME3LA4**	**MX3LA4**		2,400	2,850	420
92	1,890	1.2	19.1		**3/A 00 L2**	**BE100LA4**	**BX100LA4**	**ME3LA4**	**MX3LA4**		2,270	2,870	400
94	1,860	1.8	18.8		**3/A 01 L2**	**BE100LA4**	**BX100LA4**	**ME3LA4**	**MX3LA4**		2,260	2,680	390

P_1 = 4 hp

n_2 rpm	T_2 in•bs	S	i			IE2	IE3	IE2	IE3	NEMA	Rn_2 [lbs] NHC/HC NPC/PC	HZ/PZ	FZ
0.30	494,200	0.9	5046	**3/V 13 ML4**		**BE100LB4**	**BX100LB4**	**ME3LB4**	**MX3LB4**	**N180TC**	43,200	51,900	18,000
0.30	554,100	1.5	5234	**3/V 15 ML4**		**BE100LB4**	**BX100LB4**				42,700	52,200	20,200
0.40	402,100	1.1	4106	**3/V 11 ML4**		**BE100LB4**	**BX100LB4**	**ME3LB4**	**MX3LB4**	**N180TC**	30,500	31,800	14,600
0.40	450,400	0.9	4410	**3/V 11 ML4**		**BE100LB4**	**BX100LB4**	**ME3LB4**	**MX3LB4**	**N180TC**	30,800	32,200	14,600
0.40	412,300	1.3	4046	**3/V 13 ML4**		**BE100LB4**	**BX100LB4**	**ME3LB4**	**MX3LB4**	**N180TC**	42,200	51,900	18,000
0.40	462,200	1.1	4536	**3/V 13 ML4**		**BE100LB4**	**BX100LB4**	**ME3LB4**	**MX3LB4**	**N180TC**	42,900	51,900	18,000
0.40	438,600	1.5	3993	**3/V 14 ML4**		**BE100LB4**	**BX100LB4**				41,100	50,200	20,200
0.40	439,400	1.6	4312	**3/V 14 ML4**		**BE100LB4**	**BX100LB4**				41,600	50,700	20,200
0.40	505,300	1.4	4959	**3/V 14 ML4**		**BE100LB4**	**BX100LB4**				42,400	51,800	20,200
0.40	441,600	2.0	4151	**3/V 15 ML4**		**BE100LB4**	**BX100LB4**				41,400	50,500	20,200
0.40	524,100	1.7	4950	**3/V 15 ML4**		**BE100LB4**	**BX100LB4**				42,400	51,700	20,200
0.40	441,600	2.7	4151	**3/V 16 ML4**		**BE100LB4**	**BX100LB4**				64,400	72,300	33,700
0.40	524,100	2.0	4950	**3/V 16 ML4**		**BE100LB4**	**BX100LB4**				66,000	74,100	33,700
0.50	358,200	1.2	3222	**3/V 11 ML4**		**BE100LB4**	**BX100LB4**	**ME3LB4**	**MX3LB4**	**N180TC**	29,500	30,700	14,600
0.50	348,300	1.1	3557	**3/V 11 ML4**		**BE100LB4**	**BX100LB4**	**ME3LB4**	**MX3LB4**	**N180TC**	29,900	31,200	14,600
0.50	362,700	1.3	3263	**3/V 13 ML4**		**BE100LB4**	**BX100LB4**	**ME3LB4**	**MX3LB4**	**N180TC**	40,900	51,300	18,000
0.50	390,700	1.3	3515	**3/V 13 ML4**		**BE100LB4**	**BX100LB4**	**ME3LB4**	**MX3LB4**	**N180TC**	41,400	51,800	18,000
0.50	349,500	2.0	3182	**3/V 14 ML4**		**BE100LB4**	**BX100LB4**				39,800	48,600	20,200
0.60	336,400	1.3	3063	**3/V 11 ML4**		**BE100LB4**	**BX100LB4**	**ME3LB4**	**MX3LB4**	**N180TC**	29,200	30,500	14,600
0.60	282,600	1.8	2773	**3/V 13 ML4**		**BE100LB4**	**BX100LB4**	**ME3LB4**	**MX3LB4**	**N180TC**	40,000	50,100	18,000
0.60	294,500	2.4	2782	**3/V 14 ML4**		**BE100LB4**	**BX100LB4**				39,000	47,700	20,200
0.70	296,000	1.4	2663	**3/V 11 ML4**		**BE100LB4**	**BX100LB4**	**ME3LB4**	**MX3LB4**	**N180TC**	28,700	29,900	14,600
0.70	245,300	1.4	2430	**3/V 13 ML3**		**BE100LB4**	**BX100LB4**				39,200	49,100	18,000
0.70	255,200	2.8	2504	**3/V 14 ML4**		**BE100LB4**	**BX100LB4**				38,500	46,900	20,200
0.80	239,700	1.0	2156	**3/V 10 ML4**		**BE100LB4**	**BX100LB4**	**ME3LB4**	**MX3LB4**	**N180TC**	22,200	28,700	14,600
0.80	235,100	1.4	2329	**3/V 11 ML3**		**BE100LB4**	**BX100LB4**				28,100	29,400	14,600
0.80	234,000	2.4	2318	**3/V 14 ML3**		**BE100LB4**	**BX100LB4**				38,000	46,400	20,200
0.90	206,200	1.2	1855	**3/V 10 ML4**		**BE100LB4**	**BX100LB4**	**ME3LB4**	**MX3LB4**	**N180TC**	21,800	28,100	14,600
0.90	224,100	1.2	2016	**3/V 10 ML4**		**BE100LB4**	**BX100LB4**	**ME3LB4**	**MX3LB4**	**N180TC**	22,000	28,400	14,600
0.90	198,200	1.8	1963	**3/V 11 ML3**		**BE100LB4**	**BX100LB4**				27,400	28,600	14,600
0.90	203,800	2.5	2019	**3/V 13 ML3**		**BE100LB4**	**BX100LB4**				38,200	47,900	18,000
1.0	130,000	1.0	1288	**3/V 07 L3**		**BE100LB4**	**BX100LB4**	**ME3LB4**	**MX3LB4**	**N180TC**	17,600	24,000	9,050
1.0	135,300	1.4	1288	**3/V 09 L3**		**BE100LB4**	**BX100LB4**				17,600	24,000	7,240
1.0	157,300	1.0	1497	**3/V 09 L3**		**BE100LB4**	**BX100LB4**				18,000	24,500	7,610
1.0	176,000	1.1	1792	**3/V 09 L3**		**BE100LB4**	**BX100LB4**				18,500	25,100	8,080
1.0	128,900	1.3	1227	**3/V 10 ML3**		**BE100LB4**	**BX100LB4**				20,500	26,500	12,900
1.0	148,200	1.2	1411	**3/V 10 ML3**		**BE100LB4**	**BX100LB4**				20,900	27,000	13,500
1.0	181,900	1.4	1617	**3/V 10 ML4**		**BE100LB4**	**BX100LB4**	**ME3LB4**	**MX3LB4**	**N180TC**	21,300	27,600	14,100
1.0	132,100	2.2	1274	**3/V 11 ML3**		**BE100LB4**	**BX100LB4**				25,800	26,900	13,000
1.0	142,900	2.8	1378	**3/V 11 ML3**		**BE100LB4**	**BX100LB4**				26,100	27,200	13,400
1.0	169,600	2.2	1636	**3/V 11 ML3**		**BE100LB4**	**BX100LB4**				26,700	27,900	14,200
1.0	174,400	2.9	1682	**3/V 13 ML3**		**BE100LB4**	**BX100LB4**				37,200	46,600	17,600

Bonfiglioli Riduttori

P_1 = 4 hp

n_2 rpm	T_2 in•bs	S	i			IE2	IE3	IE2	IE3	NEMA	Rn_2 [lbs] NHC/HC NPC/PC	HZ/PZ	FZ
2.0	79,900	1.6	761	**3/V 07 L3**		**BE100LB4**	**BX100LB4**	**ME3LB4**	**MX3LB4**	**N180TC**	16,300	22,200	7,590
2.0	88,600	1.0	773	**3/V 07 L3**		**BE100LB4**	**BX100LB4**	**ME3LB4**	**MX3LB4**	**N180TC**	16,400	22,300	7,630
2.0	96,600	1.1	920	**3/V 07 L3**		**BE100LB4**	**BX100LB4**	**ME3LB4**	**MX3LB4**	**N180TC**	16,800	22,800	8,090
2.0	105,200	1.2	1015	**3/V 07 L3**		**BE100LB4**	**BX100LB4**	**ME3LB4**	**MX3LB4**	**N180TC**	17,000	23,100	8,360
2.0	83,100	1.5	761	**3/V 09 L3**		**BE100LB4**	**BX100LB4**				16,300	22,200	6,070
2.0	84,000	2.2	800	**3/V 09 L3**		**BE100LB4**	**BX100LB4**				16,500	22,400	6,180
2.0	91,700	1.9	840	**3/V 09 L3**		**BE100LB4**	**BX100LB4**				16,600	22,500	6,280
2.0	105,500	1.5	1004	**3/V 09 L3**		**BE100LB4**	**BX100LB4**				17,000	23,100	6,660
2.0	126,500	1.1	1159	**3/V 09 L3**		**BE100LB4**	**BX100LB4**				17,300	23,600	6,990
2.0	100,400	1.7	920	**3/V 10 ML3**		**BE100LB4**	**BX100LB4**				19,700	25,400	11,700
2.0	105,500	2.6	1004	**3/V 10 ML3**		**BE100LB4**	**BX100LB4**				19,900	25,700	12,000
2.0	117,700	2.1	1120	**3/V 10 ML3**		**BE100LB4**	**BX100LB4**				20,300	26,100	12,500
3.0	66,800	0.9	505		**3/A 06 L2**	**BE100LB4**	**BX100LB4**	**ME3LB4**	**MX3LB4**	**N180TC**	12,300	15,500	5,150
3.0	60,400	1.1	527	**3/V 06 L3**		**BE100LB4**	**BX100LB4**	**ME3LB4**	**MX3LB4**	**N180TC**	12,400	15,600	5,220
3.0	65,200	1.2	569	**3/V 06 L3**		**BE100LB4**	**BX100LB4**	**ME3LB4**	**MX3LB4**	**N180TC**	12,500	15,800	5,360
3.0	75,800	1.1	661	**3/V 06 L3**		**BE100LB4**	**BX100LB4**	**ME3LB4**	**MX3LB4**	**N180TC**	12,800	16,100	5,640
3.0	58,100	2.1	507	**3/V 07 L3**		**BE100LB4**	**BX100LB4**	**ME3LB4**	**MX3LB4**	**N180TC**	15,400	21,000	6,630
3.0	68,800	1.8	655	**3/V 07 L3**		**BE100LB4**	**BX100LB4**	**ME3LB4**	**MX3LB4**	**N180TC**	16,000	21,700	7,220
3.0	71,500	2.2	655	**3/V 09 L3**		**BE100LB4**	**BX100LB4**				16,000	21,700	5,780
4.0	57,500	1.2	435		**3/A 06 L2**	**BE100LB4**	**BX100LB4**	**ME3LB4**	**MX3LB4**	**N180TC**	12,100	15,200	4,900
4.0	53,500	1.5	405		**3/A 07 L2**	**BE100LB4**	**BX100LB4**	**ME3LB4**	**MX3LB4**	**N180TC**	14,900	20,300	6,150
4.0	58,000	1.4	439		**3/A 07 L2**	**BE100LB4**	**BX100LB4**	**ME3LB4**	**MX3LB4**	**N180TC**	15,100	20,500	6,320
4.0	45,800	1.5	395	**3/V 06 L3**		**BE100LB4**	**BX100LB4**	**ME3LB4**	**MX3LB4**	**N180TC**	11,900	15,000	4,750
4.0	49,500	1.5	427	**3/V 06 L3**		**BE100LB4**	**BX100LB4**	**ME3LB4**	**MX3LB4**	**N180TC**	12,000	15,200	4,870
4.0	52,700	2.1	460	**3/V 07 L3**		**BE100LB4**	**BX100LB4**	**ME3LB4**	**MX3LB4**	**N180TC**	15,200	20,700	6,420
5.0	42,400	1.4	321		**3/A 06 L2**	**BE100LB4**	**BX100LB4**	**ME3LB4**	**MX3LB4**	**N180TC**	11,700	14,800	4,430
5.0	51,300	1.0	388		**3/A 06 L2**	**BE100LB4**	**BX100LB4**	**ME3LB4**	**MX3LB4**	**N180TC**	11,900	15,000	4,720
5.0	50,200	1.1	380		**3/A 06 L2**	**BE100LB4**	**BX100LB4**	**ME3LB4**	**MX3LB4**	**N180TC**	11,800	14,900	4,690
5.0	45,100	2.2	341		**3/A 07 L2**	**BE100LB4**	**BX100LB4**	**ME3LB4**	**MX3LB4**	**N180TC**	14,700	20,000	5,810
5.0	45,800	1.7	386	**3/V 07 L3**		**BE100LB4**	**BX100LB4**	**ME3LB4**	**MX3LB4**	**N180TC**	14,800	20,200	6,060
5.0	40,400	2.9	370	**3/V 09 L3**		**BE100LB4**	**BX100LB4**				14,700	20,000	4,780
6.0	36,500	1.9	276		**3/A 06 L2**	**BE100LB4**	**BX100LB4**	**ME3LB4**	**MX3LB4**	**N180TC**	11,700	14,800	4,210
6.0	37,300	2.1	282		**3/A 07 L2**	**BE100LB4**	**BX100LB4**	**ME3LB4**	**MX3LB4**	**N180TC**	14,700	20,000	5,450
7.0	33,800	0.9	250		**3/A 04 L2**	**BE100LB4**	**BX100LB4**	**ME3LB4**	**MX3LB4**	**N180TC**	8,540	10,800	2,790
7.0	32,500	1.2	241		**3/A 05 L2**	**BE100LB4**	**BX100LB4**	**ME3LB4**	**MX3LB4**	**N180TC**	8,540	10,800	2,760
7.0	35,300	1.4	267		**3/A 06 L2**	**BE100LB4**	**BX100LB4**	**ME3LB4**	**MX3LB4**	**N180TC**	11,700	14,800	4,170
7.0	31,900	2.5	241		**3/A 07 L2**	**BE100LB4**	**BX100LB4**	**ME3LB4**	**MX3LB4**	**N180TC**	14,700	20,000	5,180
8.0	30,500	1.0	226		**3/A 04 L2**	**BE100LB4**	**BX100LB4**	**ME3LB4**	**MX3LB4**	**N180TC**	8,540	10,800	2,700
8.0	28,600	1.0	212		**3/A 05 L2**	**BE100LB4**	**BX100LB4**	**ME3LB4**	**MX3LB4**	**N180TC**	8,540	10,800	2,650
8.0	29,200	2.0	221		**3/A 06 L2**	**BE100LB4**	**BX100LB4**	**ME3LB4**	**MX3LB4**	**N180TC**	11,700	14,800	3,910
8.0	29,500	2.7	223		**3/A 07 L2**	**BE100LB4**	**BX100LB4**	**ME3LB4**	**MX3LB4**	**N180TC**	14,700	20,000	5,040
9.0	27,700	0.9	205		**3/A 04 L2**	**BE100LB4**	**BX100LB4**	**ME3LB4**	**MX3LB4**	**N180TC**	8,540	10,800	2,620
9.0	25,100	2.7	190		**3/A 06 L2**	**BE100LB4**	**BX100LB4**	**ME3LB4**	**MX3LB4**	**N180TC**	11,700	14,800	3,720
9.0	26,200	1.9	198		**3/A 06 L2**	**BE100LB4**	**BX100LB4**	**ME3LB4**	**MX3LB4**	**N180TC**	11,700	14,800	3,770
9.0	26,200	2.9	198		**3/A 07 L2**	**BE100LB4**	**BX100LB4**	**ME3LB4**	**MX3LB4**	**N180TC**	14,700	20,000	4,840
10.0	23,500	1.1	174		**3/A 04 L2**	**BE100LB4**	**BX100LB4**	**ME3LB4**	**MX3LB4**	**N180TC**	8,450	10,700	2,480
10.0	23,600	1.4	175		**3/A 05 L2**	**BE100LB4**	**BX100LB4**	**ME3LB4**	**MX3LB4**	**N180TC**	8,480	10,700	2,480
11.0	21,900	1.2	162		**3/A 04 L2**	**BE100LB4**	**BX100LB4**	**ME3LB4**	**MX3LB4**	**N180TC**	8,280	10,500	2,420
11.0	21,900	1.2	162		**3/A 05 L2**	**BE100LB4**	**BX100LB4**	**ME3LB4**	**MX3LB4**	**N180TC**	8,280	10,500	2,420
11.0	21,700	2.7	164		**3/A 06 L2**	**BE100LB4**	**BX100LB4**	**ME3LB4**	**MX3LB4**	**N180TC**	11,400	14,400	3,540
12.0	20,100	1.1	149		**3/A 04 L2**	**BE100LB4**	**BX100LB4**	**ME3LB4**	**MX3LB4**	**N180TC**	8,070	10,200	2,350
12.0	19,000	1.7	141		**3/A 05 L2**	**BE100LB4**	**BX100LB4**	**ME3LB4**	**MX3LB4**	**N180TC**	7,930	10,000	2,310
14.0	17,400	1.4	129		**3/A 04 L2**	**BE100LB4**	**BX100LB4**	**ME3LB4**	**MX3LB4**	**N180TC**	7,730	9,770	2,240
14.0	16,300	1.9	121		**3/A 05 L2**	**BE100LB4**	**BX100LB4**	**ME3LB4**	**MX3LB4**	**N180TC**	7,580	9,580	2,190
14.0	16,900	2.8	125		**3/A 06 L2**	**BE100LB4**	**BX100LB4**	**ME3LB4**	**MX3LB4**	**N180TC**	10,500	13,200	3,230

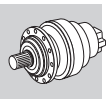

A

P_1 = 4 hp

n_2 rpm	T_2 in•bs	S	i			IE2	IE3	IE2	IE3	NEMA	Rn_2 [lbs] NHC/HC NPC/PC	HZ/PZ	FZ
15.0	15,800	1.3	117		**3/A 04 L2**	**BE100LB4**	**BX100LB4**	**ME3LB4**	**MX3LB4**	**N180TC**	7,510	9,480	2,170
17.0	13,800	1.6	102		**3/A 04 L2**	**BE100LB4**	**BX100LB4**	**ME3LB4**	**MX3LB4**	**N180TC**	7,200	9,100	2,070
17.0	14,000	1.9	104		**3/A 05 L2**	**BE100LB4**	**BX100LB4**	**ME3LB4**	**MX3LB4**	**N180TC**	7,240	9,140	2,080
18.0	13,100	1.1	96.9		**3/A 03 L2**	**BE100LB4**	**BX100LB4**	**ME3LB4**	**MX3LB4**	**N180TC**	7,090	8,960	2,040
19.0	12,200	1.7	90.7		**3/A 04 L2**	**BE100LB4**	**BX100LB4**	**ME3LB4**	**MX3LB4**	**N180TC**	6,950	8,780	1,990
20.0	11,900	1.2	88.5		**3/A 03 L2**	**BE100LB4**	**BX100LB4**	**ME3LB4**	**MX3LB4**	**N180TC**	6,900	8,720	1,980
20.0	11,600	2.7	85.6		**3/A 05 L2**	**BE100LB4**	**BX100LB4**	**ME3LB4**	**MX3LB4**	**N180TC**	6,830	8,630	1,950
21.0	11,000	1.9	81.7		**3/A 04 L2**	**BE100LB4**	**BX100LB4**	**ME3LB4**	**MX3LB4**	**N180TC**	6,740	8,510	1,920
22.0	11,000	1.0	81.3		**3/A 01 L2**	**BE100LB4**	**BX100LB4**	**ME3LB4**	**MX3LB4**	**N180TC**	3,510	4,160	640
23.0	10,200	2.6	75.8		**3/A 05 L2**	**BE100LB4**	**BX100LB4**	**ME3LB4**	**MX3LB4**	**N180TC**	6,590	8,320	1,880
24.0	10,000	1.0	74.2		**3/A 01 L2**	**BE100LB4**	**BX100LB4**	**ME3LB4**	**MX3LB4**	**N180TC**	3,410	4,050	620
24.0	9,880	1.6	73.2		**3/A 03 L2**	**BE100LB4**	**BX100LB4**	**ME3LB4**	**MX3LB4**	**N180TC**	6,520	8,240	1,860
24.0	9,790	3.0	72.5		**3/A 05 L2**	**BE100LB4**	**BX100LB4**	**ME3LB4**	**MX3LB4**	**N180TC**	6,500	8,220	1,850
26.0	9,240	2.7	68.4		**3/A 04 L2**	**BE100LB4**	**BX100LB4**	**ME3LB4**	**MX3LB4**	**N180TC**	6,390	8,070	1,810
28.0	8,490	1.6	62.9		**3/A 03 L2**	**BE100LB4**	**BX100LB4**	**ME3LB4**	**MX3LB4**	**N180TC**	6,230	7,870	1,760
28.0	8,430	3.0	62.4		**3/A 04 L2**	**BE100LB4**	**BX100LB4**	**ME3LB4**	**MX3LB4**	**N180TC**	6,220	7,850	1,760
29.0	8,020	1.4	59.4		**3/A 01 L2**	**BE100LB4**	**BX100LB4**	**ME3LB4**	**MX3LB4**	**N180TC**	3,190	3,790	580
32.0	7,320	1.0	54.2		**3/A 01 L2**	**BE100LB4**	**BX100LB4**	**ME3LB4**	**MX3LB4**	**N180TC**	3,110	3,690	560
32	7,360	2.7	54.5		**3/A 04 L2**	**BE100LB4**	**BX100LB4**	**ME3LB4**	**MX3LB4**	**N180TC**	5,970	7,540	1,680
33	7,090	2.1	52.5		**3/A 03 L2**	**BE100LB4**	**BX100LB4**	**ME3LB4**	**MX3LB4**	**N180TC**	5,900	7,460	1,660
35	6,710	3.0	49.7		**3/A 04 L2**	**BE100LB4**	**BX100LB4**	**ME3LB4**	**MX3LB4**	**N180TC**	5,810	7,340	1,630
36	6,630	1.1	49.1		**3/A 01 L2**	**BE100LB4**	**BX100LB4**	**ME3LB4**	**MX3LB4**	**N180TC**	3,010	3,580	540
40	5,930	1.4	43.9		**3/A 01 L2**	**BE100LB4**	**BX100LB4**	**ME3LB4**	**MX3LB4**	**N180TC**	2,920	3,460	520
40	5,860	2.2	43.4		**3/A 03 L2**	**BE100LB4**	**BX100LB4**	**ME3LB4**	**MX3LB4**	**N180TC**	5,580	7,040	1,560
43	5,470	2.6	40.5		**3/A 03 L2**	**BE100LB4**	**BX100LB4**	**ME3LB4**	**MX3LB4**	**N180TC**	5,460	6,900	1,520
44	5,410	1.0	40.1		**3/A 01 L2**	**BE100LB4**	**BX100LB4**	**ME3LB4**	**MX3LB4**	**N180TC**	2,840	3,370	510
49	4,830	1.4	35.8		**3/A 01 L2**	**BE100LB4**	**BX100LB4**	**ME3LB4**	**MX3LB4**	**N180TC**	2,740	3,260	490
52	4,520	2.6	33.5		**3/A 03 L2**	**BE100LB4**	**BX100LB4**	**ME3LB4**	**MX3LB4**	**N180TC**	5,160	6,510	1,430
56	4,210	1.3	31.2		**3/A 01 L2**	**BE100LB4**	**BX100LB4**	**ME3LB4**	**MX3LB4**	**N180TC**	2,630	3,120	470
61	3,890	2.6	28.8		**3/A 03 L2**	**BE100LB4**	**BX100LB4**	**ME3LB4**	**MX3LB4**	**N180TC**	4,930	6,230	1,360
76	3,110	1.3	23.0		**3/A 01 L2**	**BE100LB4**	**BX100LB4**	**ME3LB4**	**MX3LB4**	**N180TC**	2,400	2,850	420
76	3,110	2.6	23.0		**3/A 03 L2**	**BE100LB4**	**BX100LB4**	**ME3LB4**	**MX3LB4**	**N180TC**	4,610	5,820	1,260
90	2,620	2.6	19.4		**3/A 03 L2**	**BE100LB4**	**BX100LB4**	**ME3LB4**	**MX3LB4**	**N180TC**	4,380	5,530	1,190
93	2,540	1.3	18.8		**3/A 01 L2**	**BE100LB4**	**BX100LB4**	**ME3LB4**	**MX3LB4**	**N180TC**	2,260	2,680	390

P_1 = 5 hp

n_2 rpm	T_2 in•bs	S	i			IE2	IE3	IE2	IE3	NEMA	Rn_2 [lbs] NHC/HC NPC/PC	HZ/PZ	FZ
0.30	680,200	1.2	5234	**3/V 15 ML4**		**BE112M4**	**BX112M4**				42,700	52,200	20,200
0.40	506,100	1.1	4046	**3/V 13 ML4**		**BE112M4**	**BX112M4**			**N180TC**	42,200	51,900	18,000
0.40	538,400	1.2	3993	**3/V 14 ML4**		**BE112M4**	**BX112M4**				41,100	50,200	20,200
0.40	539,400	1.3	4312	**3/V 14 ML4**		**BE112M4**	**BX112M4**				41,600	50,700	20,200
0.40	620,300	1.2	4959	**3/V 14 ML4**		**BE112M4**	**BX112M4**				42,400	51,800	20,200
0.40	542,100	1.6	4151	**3/V 15 ML4**		**BE112M4**	**BX112M4**				41,400	50,500	20,200
0.40	643,300	1.4	4950	**3/V 15 ML4**		**BE112M4**	**BX112M4**				42,400	51,700	20,200
0.40	542,100	2.2	4151	**3/V 16 ML4**		**BE112M4**	**BX112M4**				64,400	72,300	33,700
0.40	643,300	1.6	4950	**3/V 16 ML4**		**BE112M4**	**BX112M4**				66,000	74,100	33,700
0.50	439,700	1.0	3222	**3/V 11 ML4**		**BE112M4**	**BX112M4**			**N180TC**	29,500	30,700	14,600
0.50	445,300	1.1	3263	**3/V 13 ML4**		**BE112M4**	**BX112M4**			**N180TC**	40,900	51,300	18,000
0.50	479,700	1.1	3515	**3/V 13 ML4**		**BE112M4**	**BX112M4**			**N180TC**	41,400	51,800	18,000
0.50	456,700	2.6	3514	**3/V 16 ML4**		**BE112M4**	**BX112M4**				62,900	70,500	33,700

Bonfiglioli Riduttori

P_1 = 5 hp

n_2 rpm	T_2 in•bs	S	i			IE2	IE3	IE2	IE3	NEMA	Rn_2 [lbs] NHC/HC NPC/PC	HZ/PZ	FZ
0.60	413,000	1.0	3063	**3/V 11 ML4**		**BE112M4**	**BX112M4**			**N180TC**	29,200	30,500	14,600
0.60	346,900	1.5	2773	**3/V 13 ML4**		**BE112M4**	**BX112M4**			**N180TC**	40,000	50,100	18,000
0.60	361,600	2.0	2782	**3/V 14 ML4**		**BE112M4**	**BX112M4**				39,000	47,700	20,200
0.60	429,100	1.6	3182	**3/V 14 ML4**		**BE112M4**	**BX112M4**				39,800	48,600	20,200
0.60	374,300	2.8	2880	**3/V 16 ML4**		**BE112M4**	**BX112M4**				61,100	68,600	33,700
0.70	363,400	1.2	2663	**3/V 11 ML4**		**BE112M4**	**BX112M4**			**N180TC**	28,700	29,900	14,600
0.70	301,200	1.2	2430	**3/V 13 ML3**		**BE112M4**	**BX112M4**				39,200	49,100	18,000
0.70	313,200	2.3	2504	**3/V 14 ML4**		**BE112M4**	**BX112M4**				38,500	46,900	20,200
0.70	348,000	2.8	2678	**3/V 16 ML4**		**BE112M4**	**BX112M4**				60,500	67,900	33,700
0.80	288,600	1.1	2329	**3/V 11 ML3**		**BE112M4**	**BX112M4**				28,100	29,400	14,600
0.80	287,300	1.9	2318	**3/V 14 ML3**		**BE112M4**	**BX112M4**				38,000	46,400	20,200
0.90	253,100	0.9	1855	**3/V 10 ML4**		**BE112M4**	**BX112M4**			**N180TC**	21,800	28,100	14,600
0.90	275,100	0.9	2016	**3/V 10 ML4**		**BE112M4**	**BX112M4**			**N180TC**	22,000	28,400	14,600
0.90	243,300	1.5	1963	**3/V 11 ML3**		**BE112M4**	**BX112M4**				27,400	28,600	14,600
0.90	250,200	2.0	2019	**3/V 13 ML3**		**BE112M4**	**BX112M4**				38,200	47,900	18,000
0.90	247,100	2.5	1994	**3/V 14 ML3**		**BE112M4**	**BX112M4**				37,200	45,400	20,200
1.0	166,100	1.1	1288	**3/V 09 L3**		**BE112M4**	**BX112M4**				17,600	24,000	7,240
1.0	158,200	1.1	1227	**3/V 10 ML3**		**BE112M4**	**BX112M4**				20,500	26,500	12,900
1.0	182,000	0.9	1411	**3/V 10 ML3**		**BE112M4**	**BX112M4**				20,900	27,000	13,500
1.0	223,300	1.1	1617	**3/V 10 ML4**		**BE112M4**	**BX112M4**			**N180TC**	21,300	27,600	14,100
1.0	162,200	1.8	1274	**3/V 11 ML3**		**BE112M4**	**BX112M4**				25,800	26,900	13,000
1.0	175,400	2.3	1378	**3/V 11 ML3**		**BE112M4**	**BX112M4**				26,100	27,200	13,400
1.0	208,200	1.8	1636	**3/V 11 ML3**		**BE112M4**	**BX112M4**				26,700	27,900	14,200
1.0	164,300	2.7	1291	**3/V 13 ML3**		**BE112M4**	**BX112M4**				35,900	44,900	16,100
1.0	180,500	2.7	1418	**3/V 13 ML3**		**BE112M4**	**BX112M4**				36,300	45,500	16,600
1.0	214,100	2.3	1682	**3/V 13 ML3**		**BE112M4**	**BX112M4**				37,200	46,600	17,600
1.0	165,900	2.5	1339	**3/V 14 ML3**		**BE112M4**	**BX112M4**				35,200	42,900	18,300
1.0	196,900	2.5	1589	**3/V 14 ML3**		**BE112M4**	**BX112M4**				36,000	44,000	19,400
2.0	98,100	1.3	761	**3/V 07 L3**		**BE112M4**	**BX112M4**			**N180TC**	16,300	22,200	7,590
2.0	118,600	0.9	920	**3/V 07 L3**		**BE112M4**	**BX112M4**			**N180TC**	16,800	22,800	8,090
2.0	129,200	1.0	1015	**3/V 07 L3**		**BE112M4**	**BX112M4**			**N180TC**	17,000	23,100	8,360
2.0	102,000	1.2	761	**3/V 09 L3**		**BE112M4**	**BX112M4**				16,300	22,200	6,070
2.0	103,200	1.8	800	**3/V 09 L3**		**BE112M4**	**BX112M4**				16,500	22,400	6,180
2.0	112,500	1.5	840	**3/V 09 L3**		**BE112M4**	**BX112M4**				16,600	22,500	6,280
2.0	129,500	1.2	1004	**3/V 09 L3**		**BE112M4**	**BX112M4**				17,000	23,100	6,660
2.0	123,300	1.4	920	**3/V 10 ML3**		**BE112M4**	**BX112M4**				19,700	25,400	11,700
2.0	129,500	2.2	1004	**3/V 10 ML3**		**BE112M4**	**BX112M4**				19,900	25,700	12,000
2.0	144,400	1.7	1120	**3/V 10 ML3**		**BE112M4**	**BX112M4**				20,300	26,100	12,500
2.0	124,400	2.5	1004	**3/V 11 ML3**		**BE112M4**	**BX112M4**				24,900	26,000	12,000
3.0	74,100	0.9	527	**3/V 06 L3**		**BE112M4**	**BX112M4**			**N180TC**	12,400	15,600	5,220
3.0	80,000	0.9	569	**3/V 06 L3**		**BE112M4**	**BX112M4**			**N180TC**	12,500	15,800	5,360
3.0	71,300	1.7	507	**3/V 07 L3**		**BE112M4**	**BX112M4**			**N180TC**	15,400	21,000	6,630
3.0	84,500	1.5	655	**3/V 07 L3**		**BE112M4**	**BX112M4**			**N180TC**	16,000	21,700	7,220
3.0	87,800	1.8	655	**3/V 09 L3**		**BE112M4**	**BX112M4**				16,000	21,700	5,780
4.0	70,600	1.0	435		**3/A 06 L2**	**BE112M4**	**BX112M4**	**ME4SA4**	**MX4SA4**	**N180TC**	12,100	15,200	4,900
4.0	65,700	1.2	405		**3/A 07 L2**	**BE112M4**	**BX112M4**	**ME4SA4**	**MX4SA4**	**N180TC**	14,900	20,300	6,150
4.0	71,200	1.1	439		**3/A 07 L2**	**BE112M4**	**BX112M4**	**ME4SA4**	**MX4SA4**	**N180TC**	15,100	20,500	6,320
4.0	56,200	1.2	395	**3/V 06 L3**		**BE112M4**	**BX112M4**			**N180TC**	11,900	15,000	4,750
4.0	60,800	1.2	427	**3/V 06 L3**		**BE112M4**	**BX112M4**			**N180TC**	12,000	15,200	4,870
4.0	64,700	1.7	460	**3/V 07 L3**		**BE112M4**	**BX112M4**			**N180TC**	15,200	20,700	6,420
4.0	59,200	2.6	442	**3/V 09 L3**		**BE112M4**	**BX112M4**				15,100	20,600	5,070
5.0	52,100	1.1	321		**3/A 06 L2**	**BE112M4**	**BX112M4**	**ME4SA4**	**MX4SA4**	**N180TC**	11,700	14,800	4,430
5.0	55,300	1.8	341		**3/A 07 L2**	**BE112M4**	**BX112M4**	**ME4SA4**	**MX4SA4**	**N180TC**	14,700	20,000	5,810
5.0	56,200	1.4	386	**3/V 07 L3**		**BE112M4**	**BX112M4**			**N180TC**	14,800	20,200	6,060
5.0	49,600	2.3	370	**3/V 09 L3**		**BE112M4**	**BX112M4**				14,700	20,000	4,780

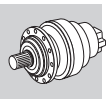

A

P_1 = 5 hp

n_2 rpm	T_2 in•bs	S	i			IE2	IE3	IE2	IE3	NEMA	Rn_2 [lbs] NHC/HC NPC/PC	HZ/PZ	FZ
6.0	44,800	1.5	276		**3/A 06 L2**	**BE112M4**	**BX112M4**	**ME4SA4**	**MX4SA4**	**N180TC**	11,700	14,800	4,210
6.0	45,800	1.7	282		**3/A 07 L2**	**BE112M4**	**BX112M4**	**ME4SA4**	**MX4SA4**	**N180TC**	14,700	20,000	5,450
7.0	39,900	1.0	241		**3/A 05 L2**	**BE112M4**	**BX112M4**	**ME4SA4**	**MX4SA4**	**N180TC**	8,540	10,800	2,760
7.0	43,300	1.1	267		**3/A 06 L2**	**BE112M4**	**BX112M4**	**ME4SA4**	**MX4SA4**	**N180TC**	11,700	14,800	4,170
7.0	39,100	2.0	241		**3/A 07 L2**	**BE112M4**	**BX112M4**	**ME4SA4**	**MX4SA4**	**N180TC**	14,700	20,000	5,180
8.0	35,900	1.6	221		**3/A 06 L2**	**BE112M4**	**BX112M4**	**ME4SA4**	**MX4SA4**	**N180TC**	11,700	14,800	3,910
8.0	36,200	2.2	223		**3/A 07 L2**	**BE112M4**	**BX112M4**	**ME4SA4**	**MX4SA4**	**N180TC**	14,700	20,000	5,040
9.0	30,800	2.2	190		**3/A 06 L2**	**BE112M4**	**BX112M4**	**ME4SA4**	**MX4SA4**	**N180TC**	11,700	14,800	3,720
9.0	32,100	1.5	198		**3/A 06 L2**	**BE112M4**	**BX112M4**	**ME4SA4**	**MX4SA4**	**N180TC**	11,700	14,800	3,770
9.0	32,100	2.4	198		**3/A 07 L2**	**BE112M4**	**BX112M4**	**ME4SA4**	**MX4SA4**	**N180TC**	14,700	20,000	4,840
10.0	29,000	1.1	175		**3/A 05 L2**	**BE112M4**	**BX112M4**	**ME4SA4**	**MX4SA4**	**N180TC**	8,480	10,700	2,480
11.0	26,900	1.0	162		**3/A 04 L2**	**BE112M4**	**BX112M4**	**ME4SA4**	**MX4SA4**	**N180TC**	8,280	10,500	2,420
11.0	26,900	1.0	162		**3/A 05 L2**	**BE112M4**	**BX112M4**	**ME4SA4**	**MX4SA4**	**N180TC**	8,280	10,500	2,420
11.0	26,600	2.2	164		**3/A 06 L2**	**BE112M4**	**BX112M4**	**ME4SA4**	**MX4SA4**	**N180TC**	11,400	14,400	3,540
12.0	23,400	1.4	141		**3/A 05 L2**	**BE112M4**	**BX112M4**	**ME4SA4**	**MX4SA4**	**N180TC**	7,930	10,000	2,310
12.0	23,200	3.0	141		**3/A 06 L2**					**N180TC**	10,900	13,700	3,360
14.0	21,400	1.1	129		**3/A 04 L2**	**BE112M4**	**BX112M4**	**ME4SA4**	**MX4SA4**	**N180TC**	7,730	9,770	2,240
14.0	20,700	2.3	125		**3/A 06 L2**	**BE112M4**	**BX112M4**	**ME4SA4**	**MX4SA4**	**N180TC**	10,500	13,200	3,230
15.0	19,400	1.1	117		**3/A 04 L2**	**BE112M4**	**BX112M4**	**ME4SA4**	**MX4SA4**	**N180TC**	7,510	9,480	2,170
15.0	20,100	1.6	121		**3/A 05 L2**	**BE112M4**	**BX112M4**	**ME4SA4**	**MX4SA4**	**N180TC**	7,580	9,580	2,190
16.0	18,400	3.0	112		**3/A 06 L2**					**N180TC**	10,200	12,800	3,120
17.0	16,900	1.3	102		**3/A 04 L2**	**BE112M4**	**BX112M4**	**ME4SA4**	**MX4SA4**	**N180TC**	7,200	9,100	2,070
17.0	17,200	1.6	104		**3/A 05 L2**	**BE112M4**	**BX112M4**	**ME4SA4**	**MX4SA4**	**N180TC**	7,240	9,140	2,080
18.0	16,100	0.9	96.9		**3/A 03 L2**	**BE112M4**	**BX112M4**			**N180TC**	7,090	8,960	2,040
18.0	16,300	2.9	98.3		**3/A 06 L2**	**BE112M4**	**BX112M4**	**ME4SA4**	**MX4SA4**	**N180TC**	9,790	12,300	2,980
19.0	15,000	1.4	90.7		**3/A 04 L2**	**BE112M4**	**BX112M4**	**ME4SA4**	**MX4SA4**	**N180TC**	6,950	8,780	1,990
20.0	14,700	1.0	88.5		**3/A 03 L2**	**BE112M4**	**BX112M4**			**N180TC**	6,900	8,720	1,980
20.0	14,700	2.5	88.5		**3/A 06 L2**	**BE112M4**	**BX112M4**	**ME4SA4**	**MX4SA4**	**N180TC**	9,480	12,000	2,880
21.0	14,200	2.2	85.6		**3/A 05 L2**	**BE112M4**	**BX112M4**	**ME4SA4**	**MX4SA4**	**N180TC**	6,830	8,630	1,950
22.0	13,500	1.6	81.7		**3/A 04 L2**	**BE112M4**	**BX112M4**	**ME4SA4**	**MX4SA4**	**N180TC**	6,740	8,510	1,920
22.0	13,500	3.0	81.2		**3/A 06 L2**	**BE112M4**	**BX112M4**	**ME4SA4**	**MX4SA4**	**N180TC**	9,240	11,700	2,800
23.0	12,600	2.1	75.8		**3/A 05 L2**	**BE112M4**	**BX112M4**	**ME4SA4**	**MX4SA4**	**N180TC**	6,590	8,320	1,880
24.0	12,100	1.3	73.2		**3/A 03 L2**	**BE112M4**	**BX112M4**			**N180TC**	6,520	8,240	1,860
24.0	12,000	2.4	72.5		**3/A 05 L2**	**BE112M4**	**BX112M4**	**ME4SA4**	**MX4SA4**	**N180TC**	6,500	8,220	1,850
25.0	11,600	3.0	69.9		**3/A 06 L2**	**BE112M4**	**BX112M4**	**ME4SA4**	**MX4SA4**	**N180TC**	8,830	11,100	2,660
26.0	11,300	2.2	68.4		**3/A 04 L2**	**BE112M4**	**BX112M4**	**ME4SA4**	**MX4SA4**	**N180TC**	6,390	8,070	1,810
28.0	10,400	1.3	62.9		**3/A 03 L2**	**BE112M4**	**BX112M4**			**N180TC**	6,230	7,870	1,760
28.0	10,300	2.4	62.4		**3/A 04 L2**	**BE112M4**	**BX112M4**	**ME4SA4**	**MX4SA4**	**N180TC**	6,220	7,850	1,760
28.0	10,400	2.7	62.6		**3/A 05 L2**	**BE112M4**	**BX112M4**	**ME4SA4**	**MX4SA4**	**N180TC**	6,220	7,860	1,760
30	9,850	1.1	59.4		**3/A 01 L2**	**BE112M4**	**BX112M4**			**N180TC**	3,190	3,790	580
32	9,030	2.2	54.5		**3/A 04 L2**	**BE112M4**	**BX112M4**	**ME4SA4**	**MX4SA4**	**N180TC**	5,970	7,540	1,680
32	9,230	3.0	55.7		**3/A 06 L2**	**BE112M4**	**BX112M4**	**ME4SA4**	**MX4SA4**	**N180TC**	8,250	10,400	2,470
33	8,950	3.0	53.3		**3/A 05 L2**					**N180TC**	5,930	7,490	1,670
34	8,700	1.7	52.5		**3/A 03 L2**	**BE112M4**	**BX112M4**			**N180TC**	5,900	7,460	1,660
35	8,240	2.4	49.7		**3/A 04 L2**	**BE112M4**	**BX112M4**	**ME4SA4**	**MX4SA4**	**N180TC**	5,810	7,340	1,630
36	8,140	0.9	49.1		**3/A 01 L2**	**BE112M4**	**BX112M4**			**N180TC**	3,010	3,580	540
37	7,820	3.0	47.2		**3/A 06 L2**	**BE112M4**	**BX112M4**	**ME4SA4**	**MX4SA4**	**N180TC**	7,850	9,900	2,340
40	7,280	1.1	43.9		**3/A 01 L2**	**BE112M4**	**BX112M4**			**N180TC**	2,920	3,460	520
40	7,340	2.7	44.3		**3/A 04 L2**	**BE112M4**	**BX112M4**	**ME4SA4**	**MX4SA4**	**N180TC**	5,610	7,080	1,570
41	7,190	1.8	43.4		**3/A 03 L2**	**BE112M4**	**BX112M4**			**N180TC**	5,580	7,040	1,560
43	6,710	2.1	40.5		**3/A 03 L2**	**BE112M4**	**BX112M4**			**N180TC**	5,460	6,900	1,520
49	5,930	1.1	35.8		**3/A 01 L2**	**BE112M4**	**BX112M4**			**N180TC**	2,740	3,260	490
53	5,550	2.1	33.5		**3/A 03 L2**	**BE112M4**	**BX112M4**			**N180TC**	5,160	6,510	1,430
56	5,170	1.1	31.2		**3/A 01 L2**	**BE112M4**	**BX112M4**			**N180TC**	2,630	3,120	470
61	4,770	2.1	28.8		**3/A 03 L2**	**BE112M4**	**BX112M4**			**N180TC**	4,930	6,230	1,360
77	3,810	1.1	23.0		**3/A 01 L2**	**BE112M4**	**BX112M4**			**N180TC**	2,400	2,850	420

Bonfiglioli Riduttori

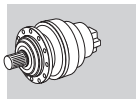

P_1 = 5 hp

n_2 rpm	T_2 in•bs	S	i			IE2	IE3	IE2	IE3	NEMA	Rn_2 [lbs] NHC/HC NPC/PC	HZ/PZ	FZ
77	3,810	2.1	23.0		**3/A 03 L2**	**BE112M4**	**BX112M4**			**N180TC**	4,610	5,820	1,260
91	3,220	2.1	19.4		**3/A 03 L2**	**BE112M4**	**BX112M4**			**N180TC**	4,380	5,530	1,190
94	3,120	1.1	18.8		**3/A 01 L2**	**BE112M4**	**BX112M4**			**N180TC**	2,260	2,680	390

P_1 = 7.5 hp

n_2 rpm	T_2 in•bs	S	i			IE2	IE3	IE2	IE3	NEMA	Rn_2 [lbs] NHC/HC NPC/PC	HZ/PZ	FZ
0.30	1,015,900	2.3	5099	**3/V 18 ML4**		**BE132S4**	**BX132SB4**				105,300	110,800	45,000
0.40	800,900	1.1	4151	**3/V 15 ML4**		**BE132S4**	**BX132SB4**				41,400	50,500	20,200
0.40	950,500	0.9	4950	**3/V 15 ML4**		**BE132S4**	**BX132SB4**				42,400	51,700	20,200
0.40	800,900	1.5	4151	**3/V 16 ML4**		**BE132S4**	**BX132SB4**				64,400	72,300	33,700
0.40	950,500	1.1	4950	**3/V 16 ML4**		**BE132S4**	**BX132SB4**				66,000	74,100	33,700
0.40	822,600	1.9	4129	**3/V 17 ML4**		**BE132S4**	**BX132SB4**				99,400	105,700	33,700
0.40	811,600	2.2	4450	**3/V 17 ML4**		**BE132S4**	**BX132SB4**				99,400	105,700	33,700
0.40	990,200	1.1	4970	**3/V 17 ML4**		**BE132S4**	**BX132SB4**				99,400	105,700	33,700
0.50	700,100	0.9	3472	**3/V 14 ML4**		**BE132S4**	**BX132SB4**				40,300	49,200	20,200
0.50	665,400	1.3	3300	**3/V 15 ML4**		**BE132S4**	**BX132SB4**				40,000	48,800	20,200
0.50	703,500	1.2	3489	**3/V 15 ML4**		**BE132S4**	**BX132SB4**				40,300	49,200	20,200
0.50	674,800	1.8	3514	**3/V 16 ML4**		**BE132S4**	**BX132SB4**				62,900	70,500	33,700
0.60	512,500	1.0	2773	**3/V 13 ML4**		**BE132S4**	**BX132SB4**			**N210TC**	40,000	50,100	18,000
0.60	534,200	1.3	2782	**3/V 14 ML4**		**BE132S4**	**BX132SB4**				39,000	47,700	20,200
0.60	633,900	1.1	3182	**3/V 14 ML4**		**BE132S4**	**BX132SB4**				39,800	48,600	20,200
0.60	560,500	1.6	2780	**3/V 15 ML4**		**BE132S4**	**BX132SB4**				39,000	47,700	20,200
0.60	553,000	1.9	2880	**3/V 16 ML4**		**BE132S4**	**BX132SB4**				61,100	68,600	33,700
0.60	519,200	2.8	2773	**3/V 17 ML4**		**BE132S4**	**BX132SB4**				94,600	100,500	33,700
0.60	631,200	2.7	3168	**3/V 17 ML4**		**BE132S4**	**BX132SB4**				96,400	102,400	33,700
0.70	462,800	1.5	2504	**3/V 14 ML4**		**BE132S4**	**BX132SB4**				38,500	46,900	20,200
0.70	514,200	1.9	2678	**3/V 16 ML4**		**BE132S4**	**BX132SB4**				60,500	67,900	33,700
0.80	424,500	1.3	2318	**3/V 14 ML3**		**BE132S4**	**BX132SB4**				38,000	46,400	20,200
0.80	418,700	1.7	2318	**3/V 15 ML3**		**BE132S4**	**BX132SB4**				38,000	46,400	20,200
0.80	472,400	2.5	2343	**3/V 16 ML4**		**BE132S4**	**BX132SB4**				59,300	66,600	33,700
0.90	359,500	1.0	1963	**3/V 11 ML3**		**BE132S4**	**BX132SB4**				27,400	28,600	14,600
0.90	369,700	1.4	2019	**3/V 13 ML3**		**BE132S4**	**BX132SB4**				38,200	47,900	18,000
0.90	365,100	1.7	1994	**3/V 14 ML3**		**BE132S4**	**BX132SB4**				37,200	45,400	20,200
0.90	360,200	2.3	1994	**3/V 15 ML3**		**BE132S4**	**BX132SB4**				37,200	45,400	20,200
0.90	387,100	2.6	1920	**3/V 16 ML4**		**BE132S4**	**BX132SB4**				57,700	64,700	33,700
1.0	239,600	1.2	1274	**3/V 11 ML3**		**BE132S4**	**BX132SB4**				25,800	26,900	13,000
1.0	259,200	1.6	1378	**3/V 11 ML3**		**BE132S4**	**BX132SB4**				26,100	27,200	13,400
1.0	307,700	1.2	1636	**3/V 11 ML3**		**BE132S4**	**BX132SB4**				26,700	27,900	14,200
1.0	242,800	1.8	1291	**3/V 13 ML3**		**BE132S4**	**BX132SB4**				35,900	44,900	16,100
1.0	266,700	1.8	1418	**3/V 13 ML3**		**BE132S4**	**BX132SB4**				36,300	45,500	16,600
1.0	312,700	1.1	1620	**3/V 13 ML3**		**BE132S4**	**BX132SB4**				37,000	46,400	17,400
1.0	316,300	1.6	1682	**3/V 13 ML3**		**BE132S4**	**BX132SB4**				37,200	46,600	17,600
1.0	249,000	2.2	1324	**3/V 14 ML3**		**BE132S4**	**BX132SB4**				35,100	42,900	18,300
1.0	245,200	1.7	1339	**3/V 14 ML3**		**BE132S4**	**BX132SB4**				35,200	42,900	18,300
1.0	291,000	1.7	1589	**3/V 14 ML3**		**BE132S4**	**BX132SB4**				36,000	44,000	19,400
1.0	312,600	2.1	1662	**3/V 14 ML3**		**BE132S4**	**BX132SB4**				36,300	44,300	19,700
1.0	263,300	2.9	1400	**3/V 15 ML3**		**BE132S4**	**BX132SB4**				35,400	43,200	18,600
1.0	312,600	2.6	1662	**3/V 15 ML3**		**BE132S4**	**BX132SB4**				36,300	44,300	19,700
1.0	359,900	2.6	1785	**3/V 16 ML4**		**BE132S4**	**BX132SB4**				57,100	64,000	33,600
2.0	152,400	1.2	800	**3/V 09 L3**		**BE132S4**	**BX132SB4**				16,500	22,400	6,180
2.0	166,300	1.0	840	**3/V 09 L3**		**BE132S4**	**BX132SB4**				16,600	22,500	6,280

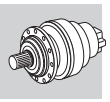

A

P_1 = 7.5 hp

n_2 rpm	T_2 in•bs	S	i			IE2	IE3	IE2	IE3	NEMA	Rn_2 [lbs] NHC/HC NPC/PC	HZ/PZ	FZ
2.0	160,700	1.1	773	**3/V 10 ML3**		**BE132S4**	**BX132SB4**				19,200	24,800	11,000
2.0	182,100	0.9	920	**3/V 10 ML3**		**BE132S4**	**BX132SB4**				19,700	25,400	11,700
2.0	191,300	1.5	1004	**3/V 10 ML3**		**BE132S4**	**BX132SB4**				19,900	25,700	12,000
2.0	213,400	1.1	1120	**3/V 10 ML3**		**BE132S4**	**BX132SB4**				20,300	26,100	12,500
2.0	139,000	2.6	720	**3/V 11 ML3**		**BE132S4**	**BX132SB4**				23,800	24,800	10,800
2.0	169,900	2.2	827	**3/V 11 ML3**		**BE132S4**	**BX132SB4**				24,300	25,300	11,300
2.0	169,300	2.2	900	**3/V 11 ML3**		**BE132S4**	**BX132SB4**				24,500	25,600	11,600
2.0	183,900	1.7	1004	**3/V 11 ML3**		**BE132S4**	**BX132SB4**				24,900	26,000	12,000
2.0	212,900	1.8	1103	**3/V 11 ML3**		**BE132S4**	**BX132SB4**				25,300	26,400	12,400
2.0	143,000	2.8	741	**3/V 13 ML3**		**BE132S4**	**BX132SB4**				33,100	41,500	13,400
2.0	167,900	2.8	870	**3/V 13 ML3**		**BE132S4**	**BX132SB4**				33,900	42,400	14,100
2.0	207,200	2.2	1009	**3/V 13 ML3**		**BE132S4**	**BX132SB4**				34,600	43,300	14,800
2.0	204,600	2.2	1088	**3/V 13 ML3**		**BE132S4**	**BX132SB4**				35,000	43,800	15,200
2.0	163,100	2.7	794	**3/V 14 ML3**		**BE132S4**	**BX132SB4**				32,600	39,800	15,400
2.0	172,400	2.8	893	**3/V 14 ML3**		**BE132S4**	**BX132SB4**				33,200	40,500	16,000
2.0	204,800	2.7	997	**3/V 14 ML3**		**BE132S4**	**BX132SB4**				33,700	41,200	16,600
2.0	209,900	2.2	1116	**3/V 14 ML3**		**BE132S4**	**BX132SB4**				34,300	41,800	17,300
3.0	105,400	1.1	507	**3/V 07 L3**		**BE132S4**	**BX132SB4**			**N210TC**	15,400	21,000	6,630
3.0	124,800	1.0	655	**3/V 07 L3**		**BE132S4**	**BX132SB4**			**N210TC**	16,000	21,700	7,220
3.0	105,400	1.2	507	**3/V 09 L3**		**BE132S4**	**BX132SB4**				15,400	21,000	5,310
3.0	129,700	1.2	655	**3/V 09 L3**		**BE132S4**	**BX132SB4**				16,000	21,700	5,780
3.0	105,400	2.1	507	**3/V 10 ML3**		**BE132S4**	**BX132SB4**				18,100	23,400	9,580
3.0	116,400	1.9	560	**3/V 10 ML3**		**BE132S4**	**BX132SB4**				18,300	23,700	9,900
3.0	127,600	1.3	614	**3/V 10 ML3**		**BE132S4**	**BX132SB4**				18,600	24,000	10,200
3.0	150,900	1.2	701	**3/V 10 ML3**		**BE132S4**	**BX132SB4**				18,900	24,500	10,700
3.0	132,300	2.7	644	**3/V 11 ML3**		**BE132S4**	**BX132SB4**				23,400	24,400	10,400
3.0	134,100	2.8	695	**3/V 14 ML3**		**BE132S4**	**BX132SB4**				32,000	39,100	14,700
4.0	95,600	1.1	460	**3/V 07 L3**		**BE132S4**	**BX132SB4**			**N210TC**	15,200	20,700	6,420
4.0	87,500	1.8	442	**3/V 09 L3**		**BE132S4**	**BX132SB4**				15,100	20,600	5,070
4.0	90,600	2.6	436	**3/V 10 ML3**		**BE132S4**	**BX132SB4**				17,700	22,900	9,110
5.0	81,800	1.2	341		**3/A 07 L2**	**BE132S4**	**BX132SB4**	**ME4SB4**	**MX4SB4**	**N210TC**	14,700	20,000	5,810
5.0	83,100	0.9	386	**3/V 07 L3**		**BE132S4**	**BX132SB4**			**N210TC**	14,800	20,200	6,060
5.0	73,200	1.6	370	**3/V 09 L3**		**BE132S4**	**BX132SB4**				14,700	20,000	4,780
6.0	66,200	1.0	276		**3/A 06 L2**	**BE132S4**	**BX132SB4**	**ME4SB4**	**MX4SB4**	**N210TC**	11,700	14,800	4,210
6.0	67,600	1.1	282		**3/A 07 L2**	**BE132S4**	**BX132SB4**	**ME4SB4**	**MX4SB4**	**N210TC**	14,700	20,000	5,450
7.0	57,800	1.4	241		**3/A 07 L2**	**BE132S4**	**BX132SB4**	**ME4SB4**	**MX4SB4**	**N210TC**	14,700	20,000	5,180
8.0	53,000	1.1	221		**3/A 06 L2**	**BE132S4**	**BX132SB4**	**ME4SB4**	**MX4SB4**	**N210TC**	11,700	14,800	3,910
8.0	53,500	1.5	223		**3/A 07 L2**	**BE132S4**	**BX132SB4**	**ME4SB4**	**MX4SB4**	**N210TC**	14,700	20,000	5,040
9.0	45,600	1.5	190		**3/A 06 L2**	**BE132S4**	**BX132SB4**	**ME4SB4**	**MX4SB4**	**N210TC**	11,700	14,800	3,720
9.0	47,500	1.0	198		**3/A 06 L2**	**BE132S4**	**BX132SB4**	**ME4SB4**	**MX4SB4**	**N210TC**	11,700	14,800	3,770
9.0	47,500	1.6	198		**3/A 07 L2**	**BE132S4**	**BX132SB4**	**ME4SB4**	**MX4SB4**	**N210TC**	14,700	20,000	4,840
10.0	43,200	2.2	180		**3/A 07 L2**	**BE132S4**	**BX132SB4**	**ME4SB4**	**MX4SB4**	**N210TC**	14,700	20,000	4,700
11.0	39,300	1.5	164		**3/A 06 L2**	**BE132S4**	**BX132SB4**	**ME4SB4**	**MX4SB4**	**N210TC**	11,400	14,400	3,540
11.0	37,200	2.1	155		**3/A 07 L2**	**BE132S4**	**BX132SB4**	**ME4SB4**	**MX4SB4**	**N210TC**	14,000	19,100	4,470
13.0	34,500	0.9	141		**3/A 05 L2**	**BE132S4**	**BX132SB4**	**ME4SB4**	**MX4SB4**	**N210TC**	7,930	10,000	2,310
13.0	33,800	2.0	141		**3/A 06 L2**	**BE132S4**	**BX132SB4**	**ME4SB4**	**MX4SB4**	**N210TC**	10,900	13,700	3,360
13.0	33,600	2.9	140		**3/A 07 L2**	**BE132S4**	**BX132SB4**	**ME4SB4**	**MX4SB4**	**N210TC**	13,600	18,500	4,320
14.0	30,600	1.6	125		**3/A 06 L2**	**BE132S4**	**BX132SB4**	**ME4SB4**	**MX4SB4**	**N210TC**	10,500	13,200	3,230
15.0	29,600	1.0	121		**3/A 05 L2**	**BE132S4**	**BX132SB4**	**ME4SB4**	**MX4SB4**	**N210TC**	7,580	9,580	2,190
16.0	26,900	2.0	112		**3/A 06 L2**	**BE132S4**	**BX132SB4**	**ME4SB4**	**MX4SB4**	**N210TC**	10,200	12,800	3,120
16.0	26,100	3.0	109		**3/A 07 L2**	**BE132S4**	**BX132SB4**	**ME4SB4**	**MX4SB4**	**N210TC**	12,600	17,200	3,970
17.0	25,000	0.9	102		**3/A 04 L2**	**BE132S4**	**BX132SB4**	**ME4SB4**	**MX4SB4**	**N210TC**	7,200	9,100	2,070
17.0	25,500	1.1	104		**3/A 05 L2**	**BE132S4**	**BX132SB4**	**ME4SB4**	**MX4SB4**	**N210TC**	7,240	9,140	2,080
18.0	24,100	2.0	98.3		**3/A 06 L2**	**BE132S4**	**BX132SB4**	**ME4SB4**	**MX4SB4**	**N210TC**	9,790	12,300	2,980
20.0	22,200	1.0	90.7		**3/A 04 L2**	**BE132S4**	**BX132SB4**	**ME4SB4**	**MX4SB4**	**N210TC**	6,950	8,780	1,990
20.0	21,700	1.7	88.5		**3/A 06 L2**	**BE132S4**	**BX132SB4**	**ME4SB4**	**MX4SB4**	**N210TC**	9,480	12,000	2,880
20.0	21,500	2.7	87.7		**3/A 07 L2**	**BE132S4**	**BX132SB4**	**ME4SB4**	**MX4SB4**	**N210TC**	11,800	16,100	3,690

Bonfiglioli Riduttori

P_1 = 7.5 hp

n_2 rpm	T_2 in•bs	S	i			IE2	IE3	IE2	IE3	NEMA	Rn_2 [lbs] NHC/HC NPC/PC	HZ/PZ	FZ
21.0	21,000	1.5	85.6		**3/A 05 L2**	**BE132S4**	**BX132SB4**	**ME4SB4**	**MX4SB4**	**N210TC**	6,830	8,630	1,950
22.0	20,000	1.0	81.7		**3/A 04 L2**	**BE132S4**	**BX132SB4**	**ME4SB4**	**MX4SB4**	**N210TC**	6,740	8,510	1,920
22.0	19,900	2.0	81.2		**3/A 06 L2**	**BE132S4**	**BX132SB4**	**ME4SB4**	**MX4SB4**	**N210TC**	9,240	11,700	2,800
23.0	18,600	1.5	75.8		**3/A 05 L2**	**BE132S4**	**BX132SB4**	**ME4SB4**	**MX4SB4**	**N210TC**	6,590	8,320	1,880
24.0	17,800	1.7	72.5		**3/A 05 L2**	**BE132S4**	**BX132SB4**	**ME4SB4**	**MX4SB4**	**N210TC**	6,500	8,220	1,850
25.0	17,100	2.0	69.9		**3/A 06 L2**	**BE132S4**	**BX132SB4**	**ME4SB4**	**MX4SB4**	**N210TC**	8,830	11,100	2,660
26.0	16,800	1.5	68.4		**3/A 04 L2**	**BE132S4**	**BX132SB4**	**ME4SB4**	**MX4SB4**	**N210TC**	6,390	8,070	1,810
26.0	16,700	2.7	68.3		**3/A 07 L2**	**BE132S4**	**BX132SB4**	**ME4SB4**	**MX4SB4**	**N210TC**	11,000	14,900	3,400
28.0	15,300	1.6	62.4		**3/A 04 L2**	**BE132S4**	**BX132SB4**	**ME4SB4**	**MX4SB4**	**N210TC**	6,220	7,850	1,760
28.0	15,300	1.9	62.6		**3/A 05 L2**	**BE132S4**	**BX132SB4**	**ME4SB4**	**MX4SB4**	**N210TC**	6,220	7,860	1,760
29.0	14,700	2.7	60.1		**3/A 06 L2**	**BE132S4**	**BX132SB4**	**ME4SB4**	**MX4SB4**	**N210TC**	8,450	10,600	2,530
31	14,000	2.1	57.0		**3/A 05 L2**	**BE132S4**	**BX132SB4**	**ME4SB4**	**MX4SB4**	**N210TC**	6,050	7,640	1,710
31	14,000	2.7	57.3		**3/A 07 L2**	**BE132S4**	**BX132SB4**	**ME4SB4**	**MX4SB4**	**N210TC**	10,400	14,200	3,210
32	13,300	1.5	54.5		**3/A 04 L2**	**BE132S4**	**BX132SB4**	**ME4SB4**	**MX4SB4**	**N210TC**	5,970	7,540	1,680
32	13,600	2.0	55.7		**3/A 06 L2**	**BE132S4**	**BX132SB4**	**ME4SB4**	**MX4SB4**	**N210TC**	8,250	10,400	2,470
33	13,100	2.1	53.3		**3/A 05 L2**	**BE132S4**	**BX132SB4**	**ME4SB4**	**MX4SB4**	**N210TC**	5,930	7,490	1,670
34	12,700	2.7	51.7		**3/A 06 L2**	**BE132S4**	**BX132SB4**	**ME4SB4**	**MX4SB4**	**N210TC**	8,070	10,200	2,410
36	12,200	1.7	49.7		**3/A 04 L2**	**BE132S4**	**BX132SB4**	**ME4SB4**	**MX4SB4**	**N210TC**	5,810	7,340	1,630
38	11,600	2.0	47.2		**3/A 06 L2**	**BE132S4**	**BX132SB4**	**ME4SB4**	**MX4SB4**	**N210TC**	7,850	9,900	2,340
40	10,800	1.9	44.3		**3/A 04 L2**	**BE132S4**	**BX132SB4**	**ME4SB4**	**MX4SB4**	**N210TC**	5,610	7,080	1,570
40	10,800	2.7	44.0		**3/A 05 L2**	**BE132S4**	**BX132SB4**	**ME4SB4**	**MX4SB4**	**N210TC**	5,600	7,070	1,570
45	9,580	2.1	39.1		**3/A 04 L2**	**BE132S4**	**BX132SB4**	**ME4SB4**	**MX4SB4**	**N210TC**	5,400	6,830	1,510
45	9,550	2.8	39.0		**3/A 05 L2**	**BE132S4**	**BX132SB4**	**ME4SB4**	**MX4SB4**	**N210TC**	5,400	6,820	1,500
50	8,650	2.3	35.3		**3/A 04 L2**	**BE132S4**	**BX132SB4**	**ME4SB4**	**MX4SB4**	**N210TC**	5,240	6,620	1,450
51	8,550	2.7	34.9		**3/A 06 L2**	**BE132S4**	**BX132SB4**	**ME4SB4**	**MX4SB4**	**N210TC**	7,180	9,040	2,110
59	7,400	2.7	30.2		**3/A 04 L2**	**BE132S4**	**BX132SB4**	**ME4SB4**	**MX4SB4**	**N210TC**	5,000	6,310	1,380
69	6,270	2.7	25.6		**3/A 04 L2**	**BE132S4**	**BX132SB4**	**ME4SB4**	**MX4SB4**	**N210TC**	4,760	6,010	1,310

P_1 = 10 hp

n_2 rpm	T_2 in•bs	S	i			IE2	IE3	IE2	IE3	NEMA	Rn_2 [lbs] NHC/HC NPC/PC	HZ/PZ	FZ
0.30	1,382,800	1.7	5099	**3/V 18 ML4**		**BE132MA4**	**BX132MA4**				105,300	110,800	45,000
0.30	1,316,100	2.8	5164	**3/V 19 L4**		**BE132MA4**	**BX132MA4**				119,500	131,600	45,000
0.40	1,090,300	1.1	4151	**3/V 16 ML4**		**BE132MA4**	**BX132MA4**				64,400	72,300	33,700
0.40	1,119,800	1.4	4129	**3/V 17 ML4**		**BE132MA4**	**BX132MA4**				99,400	105,700	33,700
0.40	1,104,800	1.6	4450	**3/V 17 ML4**		**BE132MA4**	**BX132MA4**				99,400	105,700	33,700
0.40	1,189,400	2.2	4386	**3/V 18 ML4**		**BE132MA4**	**BX132MA4**				103,000	108,500	45,000
0.40	1,237,800	2.4	4457	**3/V 19 L4**		**BE132MA4**	**BX132MA4**				117,000	128,800	45,000
0.50	905,700	1.0	3300	**3/V 15 ML4**		**BE132MA4**	**BX132MA4**				40,000	48,800	20,200
0.50	918,500	1.3	3514	**3/V 16 ML4**		**BE132MA4**	**BX132MA4**				62,900	70,500	33,700
0.50	947,800	2.8	3495	**3/V 18 ML4**		**BE132MA4**	**BX132MA4**				99,700	105,000	45,000
0.50	1,002,300	2.6	3696	**3/V 18 ML4**		**BE132MA4**	**BX132MA4**				100,500	105,900	45,000
0.60	727,200	1.0	2782	**3/V 14 ML4**		**BE132MA4**	**BX132MA4**				39,000	47,700	20,200
0.60	763,000	1.2	2780	**3/V 15 ML4**		**BE132MA4**	**BX132MA4**				39,000	47,700	20,200
0.60	752,800	1.4	2880	**3/V 16 ML4**		**BE132MA4**	**BX132MA4**				61,100	68,600	33,700
0.60	706,700	2.1	2773	**3/V 17 ML4**		**BE132MA4**	**BX132MA4**				94,600	100,500	33,700
0.60	859,100	2.0	3168	**3/V 17 ML4**		**BE132MA4**	**BX132MA4**				96,400	102,400	33,700
0.70	630,000	1.1	2504	**3/V 14 ML4**		**BE132MA4**	**BX132MA4**				38,500	46,900	20,200
0.70	700,000	1.4	2678	**3/V 16 ML4**		**BE132MA4**	**BX132MA4**				60,500	67,900	33,700
0.80	577,800	1.0	2318	**3/V 14 ML3**		**BE132MA4**	**BX132MA4**				38,000	46,400	20,200
0.80	570,000	1.2	2318	**3/V 15 ML3**		**BE132MA4**	**BX132MA4**				38,000	46,400	20,200
0.80	643,100	1.8	2343	**3/V 16 ML4**		**BE132MA4**	**BX132MA4**				59,300	66,600	33,700
0.90	503,300	1.0	2019	**3/V 13 ML3**		**BE132MA4**	**BX132MA4**				38,200	47,900	18,000
0.90	497,000	1.3	1994	**3/V 14 ML3**		**BE132MA4**	**BX132MA4**				37,200	45,400	20,200

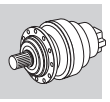

A

P_1 = 10 hp

n_2 rpm	T_2 in•bs	S	i			IE2	IE3	IE2	IE3	NEMA	Rn_2 [lbs] NHC/HC NPC/PC	HZ/PZ	FZ
0.90	490,300	1.7	1994	**3/V 15 ML3**		**BE132MA4**	**BX132MA4**				37,200	45,400	20,200
0.90	527,000	1.9	1920	**3/V 16 ML4**		**BE132MA4**	**BX132MA4**				57,700	64,700	33,700
1.0	352,800	1.2	1378	**3/V 11 ML3**		**BE132MA4**	**BX132MA4**				26,100	27,200	13,400
1.0	330,500	1.3	1291	**3/V 13 ML3**		**BE132MA4**	**BX132MA4**				35,900	44,900	16,100
1.0	363,000	1.3	1418	**3/V 13 ML3**		**BE132MA4**	**BX132MA4**				36,300	45,500	16,600
1.0	430,600	1.2	1682	**3/V 13 ML3**		**BE132MA4**	**BX132MA4**				37,200	46,600	17,600
1.0	338,900	1.6	1324	**3/V 14 ML3**		**BE132MA4**	**BX132MA4**				35,100	42,900	18,300
1.0	333,800	1.3	1339	**3/V 14 ML3**		**BE132MA4**	**BX132MA4**				35,200	42,900	18,300
1.0	396,100	1.3	1589	**3/V 14 ML3**		**BE132MA4**	**BX132MA4**				36,000	44,000	19,400
1.0	425,500	1.5	1662	**3/V 14 ML3**		**BE132MA4**	**BX132MA4**				36,300	44,300	19,700
1.0	349,200	2.3	1329	**3/V 15 ML3**		**BE132MA4**	**BX132MA4**				35,100	42,900	18,300
1.0	358,400	2.1	1400	**3/V 15 ML3**		**BE132MA4**	**BX132MA4**				35,400	43,200	18,600
1.0	425,500	1.9	1662	**3/V 15 ML3**		**BE132MA4**	**BX132MA4**				36,300	44,300	19,700
1.0	338,900	2.9	1324	**3/V 16 ML3**		**BE132MA4**	**BX132MA4**				54,700	61,400	30,400
1.0	406,800	2.4	1589	**3/V 16 ML3**		**BE132MA4**	**BX132MA4**				56,100	63,000	32,300
1.0	489,900	1.9	1785	**3/V 16 ML4**		**BE132MA4**	**BX132MA4**				57,100	64,000	33,600
2.0	207,500	0.9	800	**3/V 09 L3**		**BE132MA4**	**BX132MA4**				16,500	22,400	6,180
2.0	260,400	1.1	1004	**3/V 10 ML3**		**BE132MA4**	**BX132MA4**				19,900	25,700	12,000
2.0	189,200	1.9	720	**3/V 11 ML3**		**BE132MA4**	**BX132MA4**				23,800	24,800	10,800
2.0	231,200	1.6	827	**3/V 11 ML3**		**BE132MA4**	**BX132MA4**				24,300	25,300	11,300
2.0	230,400	1.6	900	**3/V 11 ML3**		**BE132MA4**	**BX132MA4**				24,500	25,600	11,600
2.0	250,300	1.3	1004	**3/V 11 ML3**		**BE132MA4**	**BX132MA4**				24,900	26,000	12,000
2.0	289,800	1.4	1103	**3/V 11 ML3**		**BE132MA4**	**BX132MA4**				25,300	26,400	12,400
2.0	194,700	2.1	741	**3/V 13 ML3**		**BE132MA4**	**BX132MA4**				33,100	41,500	13,400
2.0	228,600	2.1	870	**3/V 13 ML3**		**BE132MA4**	**BX132MA4**				33,900	42,400	14,100
2.0	282,100	1.6	1009	**3/V 13 ML3**		**BE132MA4**	**BX132MA4**				34,600	43,300	14,800
2.0	278,500	1.6	1088	**3/V 13 ML3**		**BE132MA4**	**BX132MA4**				35,000	43,800	15,200
2.0	222,000	2.0	794	**3/V 14 ML3**		**BE132MA4**	**BX132MA4**				32,600	39,800	15,400
2.0	234,600	2.1	893	**3/V 14 ML3**		**BE132MA4**	**BX132MA4**				33,200	40,500	16,000
2.0	278,700	2.0	997	**3/V 14 ML3**		**BE132MA4**	**BX132MA4**				33,700	41,200	16,600
2.0	285,700	1.6	1116	**3/V 14 ML3**		**BE132MA4**	**BX132MA4**				34,300	41,800	17,300
2.0	278,700	2.8	997	**3/V 15 ML3**		**BE132MA4**	**BX132MA4**				33,700	41,200	16,600
2.0	294,300	2.6	1120	**3/V 15 ML3**		**BE132MA4**	**BX132MA4**				34,300	41,900	17,300
3.0	143,500	1.5	507	**3/V 10 ML3**		**BE132MA4**	**BX132MA4**				18,100	23,400	9,580
3.0	158,500	1.4	560	**3/V 10 ML3**		**BE132MA4**	**BX132MA4**				18,300	23,700	9,900
3.0	173,700	1.0	614	**3/V 10 ML3**		**BE132MA4**	**BX132MA4**				18,600	24,000	10,200
3.0	180,000	2.0	644	**3/V 11 ML3**		**BE132MA4**	**BX132MA4**				23,400	24,400	10,400
3.0	182,600	2.1	695	**3/V 14 ML3**		**BE132MA4**	**BX132MA4**				32,000	39,100	14,700
4.0	119,100	1.3	442	**3/V 09 L3**		**BE132MA4**	**BX132MA4**				15,100	20,600	5,070
4.0	123,400	1.9	436	**3/V 10 ML3**		**BE132MA4**	**BX132MA4**				17,700	22,900	9,110
5.0	99,700	1.2	370	**3/V 09 L3**		**BE132MA4**	**BX132MA4**				14,700	20,000	4,780
7.0	78,700	1.0	241		**3/A 07 L2**	**BE132MA4**	**BX132MA4**	**ME4LA4**	**MX4LA4**	**N210TC**	14,700	20,000	5,180
8.0	72,800	1.1	223		**3/A 07 L2**	**BE132MA4**	**BX132MA4**	**ME4LA4**	**MX4LA4**	**N210TC**	14,700	20,000	5,040
9.0	62,000	1.1	190		**3/A 06 L2**	**BE132MA4**	**BX132MA4**	**ME4LA4**	**MX4LA4**	**N210TC**	11,700	14,800	3,720
9.0	64,600	1.2	198		**3/A 07 L2**	**BE132MA4**	**BX132MA4**	**ME4LA4**	**MX4LA4**	**N210TC**	14,700	20,000	4,840
10.0	58,800	1.6	180		**3/A 07 L2**	**BE132MA4**	**BX132MA4**	**ME4LA4**	**MX4LA4**	**N210TC**	14,700	20,000	4,700
11.0	53,500	1.1	164		**3/A 06 L2**	**BE132MA4**	**BX132MA4**	**ME4LA4**	**MX4LA4**	**N210TC**	11,400	14,400	3,540
11.0	50,600	1.6	155		**3/A 07 L2**	**BE132MA4**	**BX132MA4**	**ME4LA4**	**MX4LA4**	**N210TC**	14,000	19,100	4,470
13.0	46,000	1.5	141		**3/A 06 L2**	**BE132MA4**	**BX132MA4**	**ME4LA4**	**MX4LA4**	**N210TC**	10,900	13,700	3,360
13.0	45,700	2.2	140		**3/A 07 L2**	**BE132MA4**	**BX132MA4**	**ME4LA4**	**MX4LA4**	**N210TC**	13,600	18,500	4,320
14.0	41,700	1.1	125		**3/A 06 L2**	**BE132MA4**	**BX132MA4**	**ME4LA4**	**MX4LA4**	**N210TC**	10,500	13,200	3,230
14.0	42,400	2.3	130		**3/A 07 L2**	**BE132MA4**	**BX132MA4**	**ME4LA4**	**MX4LA4**	**N210TC**	13,300	18,100	4,210
16.0	36,600	1.5	112		**3/A 06 L2**	**BE132MA4**	**BX132MA4**	**ME4LA4**	**MX4LA4**	**N210TC**	10,200	12,800	3,120
16.0	35,600	2.2	109		**3/A 07 L2**	**BE132MA4**	**BX132MA4**	**ME4LA4**	**MX4LA4**	**N210TC**	12,600	17,200	3,970
18.0	32,800	1.4	98.3		**3/A 06 L2**	**BE132MA4**	**BX132MA4**	**ME4LA4**	**MX4LA4**	**N210TC**	9,790	12,300	2,980
20.0	29,500	1.2	88.5		**3/A 06 L2**	**BE132MA4**	**BX132MA4**	**ME4LA4**	**MX4LA4**	**N210TC**	9,480	12,000	2,880
20.0	29,200	2.0	87.7		**3/A 07 L2**	**BE132MA4**	**BX132MA4**	**ME4LA4**	**MX4LA4**	**N210TC**	11,800	16,100	3,690

Bonfiglioli Riduttori

P_1 = 10 hp

n_2 rpm	T_2 in•bs	S	i			IE2	IE3	IE2	IE3	NEMA	Rn_2 [lbs] NHC/HC NPC/PC	HZ/PZ	FZ
21.0	28,500	1.1	85.6		**3/A 05 L2**	**BE132MA4**	**BX132MA4**	**ME4LA4**	**MX4LA4**	**N210TC**	6,830	8,630	1,950
22.0	27,100	1.5	81.2		**3/A 06 L2**	**BE132MA4**	**BX132MA4**	**ME4LA4**	**MX4LA4**	**N210TC**	9,240	11,700	2,800
23.0	25,300	1.1	75.8		**3/A 05 L2**	**BE132MA4**	**BX132MA4**	**ME4LA4**	**MX4LA4**	**N210TC**	6,590	8,320	1,880
24.0	24,200	1.2	72.5		**3/A 05 L2**	**BE132MA4**	**BX132MA4**	**ME4LA4**	**MX4LA4**	**N210TC**	6,500	8,220	1,850
25.0	23,300	1.5	69.9		**3/A 06 L2**	**BE132MA4**	**BX132MA4**	**ME4LA4**	**MX4LA4**	**N210TC**	8,830	11,100	2,660
26.0	22,800	1.1	68.4		**3/A 04 L2**	**BE132MA4**	**BX132MA4**	**ME4LA4**	**MX4LA4**	**N210TC**	6,390	8,070	1,810
26.0	22,800	2.0	68.3		**3/A 07 L2**	**BE132MA4**	**BX132MA4**	**ME4LA4**	**MX4LA4**	**N210TC**	11,000	14,900	3,400
28.0	20,800	1.2	62.4		**3/A 04 L2**	**BE132MA4**	**BX132MA4**	**ME4LA4**	**MX4LA4**	**N210TC**	6,220	7,850	1,760
28.0	20,900	1.4	62.6		**3/A 05 L2**	**BE132MA4**	**BX132MA4**	**ME4LA4**	**MX4LA4**	**N210TC**	6,220	7,860	1,760
29.0	20,000	2.0	60.1		**3/A 06 L2**	**BE132MA4**	**BX132MA4**	**ME4LA4**	**MX4LA4**	**N210TC**	8,450	10,600	2,530
31	19,000	1.5	57.0		**3/A 05 L2**	**BE132MA4**	**BX132MA4**	**ME4LA4**	**MX4LA4**	**N210TC**	6,050	7,640	1,710
31	19,100	2.0	57.3		**3/A 07 L2**	**BE132MA4**	**BX132MA4**	**ME4LA4**	**MX4LA4**	**N210TC**	10,400	14,200	3,210
32	18,200	1.1	54.5		**3/A 04 L2**	**BE132MA4**	**BX132MA4**	**ME4LA4**	**MX4LA4**	**N210TC**	5,970	7,540	1,680
32	18,600	1.5	55.7		**3/A 06 L2**	**BE132MA4**	**BX132MA4**	**ME4LA4**	**MX4LA4**	**N210TC**	8,250	10,400	2,470
33	17,800	1.5	53.3		**3/A 05 L2**	**BE132MA4**	**BX132MA4**	**ME4LA4**	**MX4LA4**	**N210TC**	5,930	7,490	1,670
34	17,200	2.0	51.7		**3/A 06 L2**	**BE132MA4**	**BX132MA4**	**ME4LA4**	**MX4LA4**	**N210TC**	8,070	10,200	2,410
36	16,600	1.2	49.7		**3/A 04 L2**	**BE132MA4**	**BX132MA4**	**ME4LA4**	**MX4LA4**	**N210TC**	5,810	7,340	1,630
38	15,700	1.5	47.2		**3/A 06 L2**	**BE132MA4**	**BX132MA4**	**ME4LA4**	**MX4LA4**	**N210TC**	7,850	9,900	2,340
40	14,800	1.4	44.3		**3/A 04 L2**	**BE132MA4**	**BX132MA4**	**ME4LA4**	**MX4LA4**	**N210TC**	5,610	7,080	1,570
40	14,700	2.0	44.0		**3/A 05 L2**	**BE132MA4**	**BX132MA4**	**ME4LA4**	**MX4LA4**	**N210TC**	5,600	7,070	1,570
43	13,700	2.3	41.1		**3/A 06 L2**	**BE132MA4**	**BX132MA4**	**ME4LA4**	**MX4LA4**	**N210TC**	7,530	9,500	2,230
45	13,000	1.5	39.1		**3/A 04 L2**	**BE132MA4**	**BX132MA4**	**ME4LA4**	**MX4LA4**	**N210TC**	5,400	6,830	1,510
45	13,000	2.0	39.0		**3/A 05 L2**	**BE132MA4**	**BX132MA4**	**ME4LA4**	**MX4LA4**	**N210TC**	5,400	6,820	1,500
50	11,800	1.7	35.3		**3/A 04 L2**	**BE132MA4**	**BX132MA4**	**ME4LA4**	**MX4LA4**	**N210TC**	5,240	6,620	1,450
51	11,600	2.0	34.9		**3/A 06 L2**	**BE132MA4**	**BX132MA4**	**ME4LA4**	**MX4LA4**	**N210TC**	7,180	9,040	2,110
54	10,900	2.3	32.7		**3/A 06 L2**	**BE132MA4**	**BX132MA4**	**ME4LA4**	**MX4LA4**	**N210TC**	7,040	8,870	2,070
55	10,700	2.7	32.2		**3/A 05 L2**	**BE132MA4**	**BX132MA4**	**ME4LA4**	**MX4LA4**	**N210TC**	5,100	6,440	1,410
59	10,100	2.0	30.2		**3/A 04 L2**	**BE132MA4**	**BX132MA4**	**ME4LA4**	**MX4LA4**	**N210TC**	5,000	6,310	1,380
64	9,230	2.7	27.7		**3/A 04 L2**	**BE132MA4**	**BX132MA4**	**ME4LA4**	**MX4LA4**	**N210TC**	4,870	6,160	1,340
64	9,230	2.7	27.7		**3/A 05 L2**	**BE132MA4**	**BX132MA4**	**ME4LA4**	**MX4LA4**	**N210TC**	4,870	6,160	1,340
64	9,230	2.3	27.7		**3/A 06 L2**	**BE132MA4**	**BX132MA4**	**ME4LA4**	**MX4LA4**	**N210TC**	6,690	8,440	1,960
69	8,530	2.0	25.6		**3/A 04 L2**	**BE132MA4**	**BX132MA4**	**ME4LA4**	**MX4LA4**	**N210TC**	4,760	6,010	1,310
80	7,370	2.7	22.1		**3/A 04 L2**	**BE132MA4**	**BX132MA4**	**ME4LA4**	**MX4LA4**	**N210TC**	4,550	5,750	1,240
80	7,370	2.7	22.1		**3/A 05 L2**	**BE132MA4**	**BX132MA4**	**ME4LA4**	**MX4LA4**	**N210TC**	4,550	5,750	1,240
95	6,230	2.7	18.7		**3/A 04 L2**	**BE132MA4**	**BX132MA4**	**ME4LA4**	**MX4LA4**	**N210TC**	4,330	5,470	1,180
95	6,230	2.7	18.7		**3/A 05 L2**	**BE132MA4**	**BX132MA4**	**ME4LA4**	**MX4LA4**	**N210TC**	4,330	5,470	1,180

P_1 = 15 hp

n_2 rpm	T_2 in•bs	S	i			IE2	IE3	IE2	IE3	NEMA	Rn_2 [lbs] NHC/HC NPC/PC	HZ/PZ	FZ
0.30	2,027,900	1.2	5099	**3/V 18 ML4**		**BE160M4**	**BX160MB4**				105,300	110,800	45,000
0.30	1,930,000	1.9	5164	**3/V 19 L4**		**BE160M4**	**BX160MB4**				119,500	131,600	45,000
0.40	1,642,100	1.0	4129	**3/V 17 ML4**		**BE160M4**	**BX160MB4**				99,400	105,700	33,700
0.40	1,744,300	1.5	4386	**3/V 18 ML4**		**BE160M4**	**BX160MB4**				103,000	108,500	45,000
0.40	1,628,600	2.1	4095	**3/V 19 L4**		**BE160M4**	**BX160MB4**				115,600	127,300	45,000
0.40	1,815,200	1.6	4457	**3/V 19 L4**		**BE160M4**	**BX160MB4**				117,000	128,800	45,000
0.40	1,831,300	2.7	4550	**3/V 21 L4**		**BE160M4**	**BX160MB4**				166,000	197,600	269,800
0.40	1,907,800	2.6	5040	**3/V 21 L4**		**BE160M4**	**BX160MB4**				168,400	200,500	269,800
0.50	1,459,300	0.9	3583	**3/V 17 ML4**		**BE160M4**	**BX160MB4**				98,100	104,200	33,700
0.50	1,390,000	1.9	3495	**3/V 18 ML4**		**BE160M4**	**BX160MB4**				99,700	105,000	45,000
0.50	1,469,900	1.8	3696	**3/V 18 ML4**		**BE160M4**	**BX160MB4**				100,500	105,900	45,000
0.50	1,315,900	2.4	3231	**3/V 19 L4**		**BE160M4**	**BX160MB4**				111,700	123,000	45,000
0.50	1,521,400	2.7	3780	**3/V 21 L4**		**BE160M4**	**BX160MB4**				161,700	192,400	269,800
0.60	1,036,400	1.4	2773	**3/V 17 ML4**		**BE160M4**	**BX160MB4**				94,600	100,500	33,700

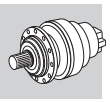

A

P_1 = 15 hp

n_2 rpm	T_2 in•bs	S	i			IE2	IE3	IE2	IE3	NEMA	Rn_2 [lbs] NHC/HC NPC/PC	HZ/PZ	FZ
0.60	1,259,900	1.3	3168	**3/V 17 ML4**		**BE160M4**	**BX160MB4**				96,400	102,400	33,700
0.60	1,171,200	2.1	2945	**3/V 18 ML4**		**BE160M4**	**BX160MB4**				97,300	102,500	45,000
0.70	1,047,800	1.1	2485	**3/V 17 ML4**		**BE160M4**	**BX160MB4**				93,100	98,900	33,700
0.70	1,003,500	2.6	2464	**3/V 18 ML4**		**BE160M4**	**BX160MB4**				94,900	99,900	45,000
0.80	943,000	1.3	2343	**3/V 16 ML4**		**BE160M4**	**BX160MB4**				59,300	66,600	33,700
0.80	912,700	2.1	2295	**3/V 18 ML4**		**BE160M4**	**BX160MB4**				93,900	98,900	45,000
0.90	719,000	1.1	1994	**3/V 15 ML3**		**BE160M4**	**BX160MB4**				37,200	45,400	20,200
0.90	772,800	1.3	1920	**3/V 16 ML4**		**BE160M4**	**BX160MB4**				57,700	64,700	33,700
0.90	870,700	1.8	2065	**3/V 17 ML4**		**BE160M4**	**BX160MB4**				90,700	96,300	33,700
1.0	512,100	1.5	1329	**3/V 15 ML3**		**BE160M4**	**BX160MB4**				35,100	42,900	18,300
1.0	525,600	1.5	1400	**3/V 15 ML3**		**BE160M4**	**BX160MB4**				35,400	43,200	18,600
1.0	623,900	1.3	1662	**3/V 15 ML3**		**BE160M4**	**BX160MB4**				36,300	44,300	19,700
1.0	497,100	2.0	1324	**3/V 16 ML3**		**BE160M4**	**BX160MB4**				54,700	61,400	30,400
1.0	596,500	1.7	1589	**3/V 16 ML3**		**BE160M4**	**BX160MB4**				56,100	63,000	32,300
1.0	718,400	1.3	1785	**3/V 16 ML4**		**BE160M4**	**BX160MB4**				57,100	64,000	33,600
1.0	504,100	2.5	1215	**3/V 17 ML3**		**BE160M4**	**BX160MB4**				84,100	89,300	29,600
1.0	532,700	2.6	1365	**3/V 17 ML3**		**BE160M4**	**BX160MB4**				85,500	90,800	30,800
1.0	725,000	2.3	1780	**3/V 17 ML4**		**BE160M4**	**BX160MB4**				88,800	94,300	33,600
2.0	277,400	1.3	720	**3/V 11 ML3**		**BE160M4**	**BX160MB4**				23,800	24,800	10,800
2.0	339,100	1.1	827	**3/V 11 ML3**		**BE160M4**	**BX160MB4**				24,300	25,300	11,300
2.0	425,000	0.9	1103	**3/V 11 ML3**		**BE160M4**	**BX160MB4**				25,300	26,400	12,400
2.0	285,500	1.4	741	**3/V 13 ML3**		**BE160M4**	**BX160MB4**				33,100	41,500	13,400
2.0	340,100	0.9	810	**3/V 13 ML3**		**BE160M4**	**BX160MB4**				33,500	42,000	13,800
2.0	335,200	1.4	870	**3/V 13 ML3**		**BE160M4**	**BX160MB4**				33,900	42,400	14,100
2.0	413,700	1.1	1009	**3/V 13 ML3**		**BE160M4**	**BX160MB4**				34,600	43,300	14,800
2.0	325,500	1.3	794	**3/V 14 ML3**		**BE160M4**	**BX160MB4**				32,600	39,800	15,400
2.0	344,100	1.4	893	**3/V 14 ML3**		**BE160M4**	**BX160MB4**				33,200	40,500	16,000
2.0	408,800	1.3	997	**3/V 14 ML3**		**BE160M4**	**BX160MB4**				33,700	41,200	16,600
2.0	344,400	2.1	840	**3/V 15 ML3**		**BE160M4**	**BX160MB4**				32,900	40,200	15,700
2.0	408,800	1.9	997	**3/V 15 ML3**		**BE160M4**	**BX160MB4**				33,700	41,200	16,600
2.0	431,500	1.8	1120	**3/V 15 ML3**		**BE160M4**	**BX160MB4**				34,300	41,900	17,300
2.0	329,500	2.7	794	**3/V 16 ML3**		**BE160M4**	**BX160MB4**				50,800	57,000	25,700
2.0	348,500	2.6	893	**3/V 16 ML3**		**BE160M4**	**BX160MB4**				51,700	58,000	26,700
2.0	413,300	2.5	1059	**3/V 16 ML3**		**BE160M4**	**BX160MB4**				53,000	59,400	28,300
2.0	353,100	2.7	851	**3/V 17 ML3**		**BE160M4**	**BX160MB4**				79,900	84,900	26,300
2.0	424,900	2.7	1024	**3/V 17 ML3**		**BE160M4**	**BX160MB4**				82,000	87,200	27,900
2.0	442,500	2.6	1134	**3/V 17 ML3**		**BE160M4**	**BX160MB4**				83,200	88,400	28,900
3.0	210,400	1.0	507	**3/V 10 ML3**		**BE160M4**	**BX160MB4**				18,100	23,400	9,580
3.0	232,400	0.9	560	**3/V 10 ML3**		**BE160M4**	**BX160MB4**				18,300	23,700	9,900
3.0	214,100	1.3	510	**3/V 11 ML3**		**BE160M4**	**BX160MB4**				22,600	23,600	9,600
3.0	231,400	1.5	551	**3/V 11 ML3**		**BE160M4**	**BX160MB4**				22,900	23,900	9,850
3.0	264,000	1.3	644	**3/V 11 ML3**		**BE160M4**	**BX160MB4**				23,400	24,400	10,400
3.0	216,700	2.0	516	**3/V 13 ML3**		**BE160M4**	**BX160MB4**				31,500	39,400	11,900
3.0	238,100	1.7	567	**3/V 13 ML3**		**BE160M4**	**BX160MB4**				31,900	39,900	12,200
3.0	282,600	1.5	673	**3/V 13 ML3**		**BE160M4**	**BX160MB4**				32,700	40,900	13,000
3.0	251,700	1.8	579	**3/V 14 ML3**		**BE160M4**	**BX160MB4**				31,200	38,100	13,900
3.0	279,200	2.1	665	**3/V 14 ML3**		**BE160M4**	**BX160MB4**				31,800	38,800	14,500
3.0	267,800	1.4	695	**3/V 14 ML3**		**BE160M4**	**BX160MB4**				32,000	39,100	14,700
3.0	279,200	2.6	665	**3/V 15 ML3**		**BE160M4**	**BX160MB4**				31,800	38,800	14,500
3.0	277,600	2.7	669	**3/V 16 ML3**		**BE160M4**	**BX160MB4**				49,600	55,700	24,200
4.0	180,900	1.3	436	**3/V 10 ML3**		**BE160M4**	**BX160MB4**				17,700	22,900	9,110
4.0	180,500	1.9	430	**3/V 11 ML3**		**BE160M4**	**BX160MB4**				22,100	23,100	9,060
4.0	184,700	2.1	425	**3/V 13 ML3**		**BE160M4**	**BX160MB4**				30,600	38,300	11,100
4.0	172,600	2.4	399	**3/V 14 ML3**		**BE160M4**	**BX160MB4**				29,600	36,100	12,200
4.0	187,300	2.3	446	**3/V 14 ML3**		**BE160M4**	**BX160MB4**				30,100	36,700	12,700
4.0	216,500	2.4	498	**3/V 14 ML3**		**BE160M4**	**BX160MB4**				30,500	37,300	13,200
5.0	155,400	2.3	370	**3/V 13 ML3**		**BE160M4**	**BX160MB4**				30,000	37,600	10,600

Bonfiglioli Riduttori

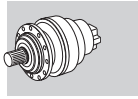

A

P_1 = 15 hp

n_2 rpm	T_2 in•bs	S	i			IE2	IE3	IE2	IE3	NEMA	Rn_2 [lbs] NHC/HC NPC/PC	HZ/PZ	FZ
10.0	86,200	1.1	180		**3/A 07 L2**	**BE160M4**	**BX160MB4**	**ME5SA4**	**MX5SB4**		14,700	20,000	4,700
11.0	74,200	1.1	155		**3/A 07 L2**	**BE160M4**	**BX160MB4**	**ME5SA4**	**MX5SB4**		14,000	19,100	4,470
13.0	67,500	1.0	141		**3/A 06 L2**	**BE160M4**	**BX160MB4**	**ME5SA4**	**MX5SB4**		10,900	13,700	3,360
13.0	67,000	1.5	140		**3/A 07 L2**	**BE160M4**	**BX160MB4**	**ME5SA4**	**MX5SB4**		13,600	18,500	4,320
14.0	62,200	1.6	130		**3/A 07 L2**	**BE160M4**	**BX160MB4**	**ME5SA4**	**MX5SB4**		13,300	18,100	4,210
16.0	53,600	1.0	112		**3/A 06 L2**	**BE160M4**	**BX160MB4**	**ME5SA4**	**MX5SB4**		10,200	12,800	3,120
16.0	52,200	1.5	109		**3/A 07 L2**	**BE160M4**	**BX160MB4**	**ME5SA4**	**MX5SB4**		12,600	17,200	3,970
18.0	48,100	1.0	98.3		**3/A 06 L2**	**BE160M4**	**BX160MB4**	**ME5SA4**	**MX5SB4**		9,790	12,300	2,980
20.0	42,900	1.4	87.7		**3/A 07 L2**	**BE160M4**	**BX160MB4**	**ME5SA4**	**MX5SB4**		11,800	16,100	3,690
22.0	39,700	1.0	81.2		**3/A 06 L2**	**BE160M4**	**BX160MB4**	**ME5SA4**	**MX5SB4**		9,240	11,700	2,800
25.0	34,200	1.0	69.9		**3/A 06 L2**	**BE160M4**	**BX160MB4**	**ME5SA4**	**MX5SB4**		8,830	11,100	2,660
26.0	33,400	1.4	68.3		**3/A 07 L2**	**BE160M4**	**BX160MB4**	**ME5SA4**	**MX5SB4**		11,000	14,900	3,400
29.0	29,400	1.4	60.1		**3/A 06 L2**	**BE160M4**	**BX160MB4**	**ME5SA4**	**MX5SB4**		8,450	10,600	2,530
31	28,000	1.4	57.3		**3/A 07 L2**	**BE160M4**	**BX160MB4**	**ME5SA4**	**MX5SB4**		10,400	14,200	3,210
32	27,200	1.0	55.7		**3/A 06 L2**	**BE160M4**	**BX160MB4**	**ME5SA4**	**MX5SB4**		8,250	10,400	2,470
34	25,300	1.4	51.7		**3/A 06 L2**	**BE160M4**	**BX160MB4**	**ME5SA4**	**MX5SB4**		8,070	10,200	2,410
36	24,100	2.7	49.2		**3/A 07 L2**	**BE160M4**	**BX160MB4**	**ME5SA4**	**MX5SB4**		9,950	13,500	3,050
38	23,100	1.0	47.2		**3/A 06 L2**	**BE160M4**	**BX160MB4**	**ME5SA4**	**MX5SB4**		7,850	9,900	2,340
43	20,100	1.6	41.1		**3/A 06 L2**	**BE160M4**	**BX160MB4**	**ME5SA4**	**MX5SB4**		7,530	9,500	2,230
43	20,300	2.7	41.5		**3/A 07 L2**	**BE160M4**	**BX160MB4**	**ME5SA4**	**MX5SB4**		9,450	12,900	2,880
51	17,100	1.4	34.9		**3/A 06 L2**	**BE160M4**	**BX160MB4**	**ME5SA4**	**MX5SB4**		7,180	9,040	2,110
54	16,000	1.6	32.7		**3/A 06 L2**	**BE160M4**	**BX160MB4**	**ME5SA4**	**MX5SB4**		7,040	8,870	2,070
55	15,800	2.7	32.3		**3/A 07 L2**	**BE160M4**	**BX160MB4**	**ME5SA4**	**MX5SB4**		8,770	11,900	2,650
64	13,500	1.6	27.7		**3/A 06 L2**	**BE160M4**	**BX160MB4**	**ME5SA4**	**MX5SB4**		6,690	8,440	1,960
65	13,200	2.7	27.1		**3/A 07 L2**	**BE160M4**	**BX160MB4**	**ME5SA4**	**MX5SB4**		8,320	11,300	2,500

P_1 = 20 hp

n_2 rpm	T_2 in•bs	S	i			IE2	IE3	IE2	IE3	NEMA	Rn_2 [lbs] NHC/HC NPC/PC	HZ/PZ	FZ
0.30	2,632,100	1.4	5164	**3/V 19 L4**		**BE160L4**	**BX160L4**				119,500	131,600	45,000
0.40	2,378,900	1.1	4386	**3/V 18 ML4**		**BE160L4**	**BX160L4**				103,000	108,500	45,000
0.40	2,221,100	1.5	4095	**3/V 19 L4**		**BE160L4**	**BX160L4**				115,600	127,300	45,000
0.40	2,475,700	1.2	4457	**3/V 19 L4**		**BE160L4**	**BX160L4**				117,000	128,800	45,000
0.40	2,497,600	2.0	4550	**3/V 21 L4**		**BE160L4**	**BX160L4**				166,000	197,600	269,800
0.40	2,601,900	1.9	5040	**3/V 21 L4**		**BE160L4**	**BX160L4**				168,400	200,500	269,800
0.50	1,895,600	1.4	3495	**3/V 18 ML4**		**BE160L4**	**BX160L4**				99,700	105,000	45,000
0.50	2,004,600	1.3	3696	**3/V 18 ML4**		**BE160L4**	**BX160L4**				100,500	105,900	45,000
0.50	1,794,700	1.8	3231	**3/V 19 L4**		**BE160L4**	**BX160L4**				111,700	123,000	45,000
0.50	2,023,200	2.3	3600	**3/V 21 L4**		**BE160L4**	**BX160L4**				160,500	191,100	269,800
0.50	2,074,900	2.0	3780	**3/V 21 L4**		**BE160L4**	**BX160L4**				161,700	192,400	269,800
0.60	1,413,400	1.0	2773	**3/V 17 ML4**		**BE160L4**	**BX160L4**				94,600	100,500	33,700
0.60	1,718,300	1.0	3168	**3/V 17 ML4**		**BE160L4**	**BX160L4**				96,400	102,400	33,700
0.60	1,597,300	1.5	2945	**3/V 18 ML4**		**BE160L4**	**BX160L4**				97,300	102,500	45,000
0.70	1,368,600	1.9	2464	**3/V 18 ML4**		**BE160L4**	**BX160L4**				94,900	99,900	45,000
0.70	1,434,200	2.3	2582	**3/V 19 L4**		**BE160L4**	**BX160L4**				108,200	119,200	45,000
0.80	1,286,100	0.9	2343	**3/V 16 ML4**		**BE160L4**	**BX160L4**				59,300	66,600	33,700
0.80	1,244,800	1.5	2295	**3/V 18 ML4**		**BE160L4**	**BX160L4**				93,900	98,900	45,000
0.90	1,053,900	1.0	1920	**3/V 16 ML4**		**BE160L4**	**BX160L4**				57,700	64,700	33,700
0.90	1,187,500	1.3	2065	**3/V 17 ML4**		**BE160L4**	**BX160L4**				90,700	96,300	33,700
1.0	698,400	1.1	1329	**3/V 15 ML3**		**BE160L4**	**BX160L4**				35,100	42,900	18,300
1.0	716,800	1.1	1400	**3/V 15 ML3**		**BE160L4**	**BX160L4**				35,400	43,200	18,600
1.0	850,900	0.9	1662	**3/V 15 ML3**		**BE160L4**	**BX160L4**				36,300	44,300	19,700
1.0	677,900	1.5	1324	**3/V 16 ML3**		**BE160L4**	**BX160L4**				54,700	61,400	30,400
1.0	813,600	1.2	1589	**3/V 16 ML3**		**BE160L4**	**BX160L4**				56,100	63,000	32,300

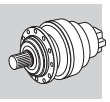

A

P_1 = 20 hp

n_2 rpm	T_2 in•bs	S	i			IE2	IE3	IE2	IE3	NEMA	Rn_2 [lbs] NHC/HC NPC/PC	HZ/PZ	FZ
1.0	979,800	1.0	1785	**3/V 16 ML4**		**BE160L4**	**BX160L4**				57,100	64,000	33,600
1.0	687,600	1.8	1215	**3/V 17 ML3**		**BE160L4**	**BX160L4**				84,100	89,300	29,600
1.0	726,500	1.9	1365	**3/V 17 ML3**		**BE160L4**	**BX160L4**				85,500	90,800	30,800
1.0	988,700	1.7	1780	**3/V 17 ML4**		**BE160L4**	**BX160L4**				88,800	94,300	33,600
1.0	847,100	2.7	1473	**3/V 18 ML4**		**BE160L4**	**BX160L4**				88,100	92,800	42,100
1.0	1,005,200	2.6	1748	**3/V 18 ML4**		**BE160L4**	**BX160L4**				90,300	95,100	44,500
1.0	1,062,700	2.5	1848	**3/V 18 ML4**		**BE160L4**	**BX160L4**				91,000	95,900	45,000
2.0	378,300	1.0	720	**3/V 11 ML3**		**BE160L4**	**BX160L4**				23,800	24,800	10,800
2.0	389,400	1.0	741	**3/V 13 ML3**		**BE160L4**	**BX160L4**				33,100	41,500	13,400
2.0	457,200	1.0	870	**3/V 13 ML3**		**BE160L4**	**BX160L4**				33,900	42,400	14,100
2.0	444,000	1.0	794	**3/V 14 ML3**		**BE160L4**	**BX160L4**				32,600	39,800	15,400
2.0	469,200	1.0	893	**3/V 14 ML3**		**BE160L4**	**BX160L4**				33,200	40,500	16,000
2.0	557,500	1.0	997	**3/V 14 ML3**		**BE160L4**	**BX160L4**				33,700	41,200	16,600
2.0	469,700	1.5	840	**3/V 15 ML3**		**BE160L4**	**BX160L4**				32,900	40,200	15,700
2.0	557,500	1.4	997	**3/V 15 ML3**		**BE160L4**	**BX160L4**				33,700	41,200	16,600
2.0	588,500	1.3	1120	**3/V 15 ML3**		**BE160L4**	**BX160L4**				34,300	41,900	17,300
2.0	450,300	2.0	794	**3/V 16 ML3**		**BE160L4**	**BX160L4**				50,800	57,000	25,700
2.0	475,300	1.9	893	**3/V 16 ML3**		**BE160L4**	**BX160L4**				51,700	58,000	26,700
2.0	563,600	1.8	1059	**3/V 16 ML3**		**BE160L4**	**BX160L4**				53,000	59,400	28,300
2.0	469,300	2.5	810	**3/V 17 ML3**		**BE160L4**	**BX160L4**				79,300	84,300	25,800
2.0	481,600	2.0	851	**3/V 17 ML3**		**BE160L4**	**BX160L4**				79,900	84,900	26,300
2.0	579,500	2.0	1024	**3/V 17 ML3**		**BE160L4**	**BX160L4**				82,000	87,200	27,900
2.0	603,500	1.9	1134	**3/V 17 ML3**		**BE160L4**	**BX160L4**				83,200	88,400	28,900
3.0	292,000	1.0	510	**3/V 11 ML3**		**BE160L4**	**BX160L4**				22,600	23,600	9,600
3.0	315,500	1.1	551	**3/V 11 ML3**		**BE160L4**	**BX160L4**				22,900	23,900	9,850
3.0	360,100	1.0	644	**3/V 11 ML3**		**BE160L4**	**BX160L4**				23,400	24,400	10,400
3.0	295,500	1.5	516	**3/V 13 ML3**		**BE160L4**	**BX160L4**				31,500	39,400	11,900
3.0	324,700	1.3	567	**3/V 13 ML3**		**BE160L4**	**BX160L4**				31,900	39,900	12,200
3.0	385,400	1.1	673	**3/V 13 ML3**		**BE160L4**	**BX160L4**				32,700	40,900	13,000
3.0	343,300	1.3	579	**3/V 14 ML3**		**BE160L4**	**BX160L4**				31,200	38,100	13,900
3.0	380,800	1.6	665	**3/V 14 ML3**		**BE160L4**	**BX160L4**				31,800	38,800	14,500
3.0	365,200	1.0	695	**3/V 14 ML3**		**BE160L4**	**BX160L4**				32,000	39,100	14,700
3.0	320,700	2.3	560	**3/V 15 ML3**		**BE160L4**	**BX160L4**				31,100	37,900	13,700
3.0	380,800	1.9	665	**3/V 15 ML3**		**BE160L4**	**BX160L4**				31,800	38,800	14,500
3.0	378,600	2.0	669	**3/V 16 ML3**		**BE160L4**	**BX160L4**				49,600	55,700	24,200
4.0	246,700	1.0	436	**3/V 10 ML3**		**BE160L4**	**BX160L4**				17,700	22,900	9,110
4.0	246,200	1.4	430	**3/V 11 ML3**		**BE160L4**	**BX160L4**				22,100	23,100	9,060
4.0	252,000	1.6	425	**3/V 13 ML3**		**BE160L4**	**BX160L4**				30,600	38,300	11,100
4.0	235,400	1.7	399	**3/V 14 ML3**		**BE160L4**	**BX160L4**				29,600	36,100	12,200
4.0	255,400	1.7	446	**3/V 14 ML3**		**BE160L4**	**BX160L4**				30,100	36,700	12,700
4.0	295,200	1.7	498	**3/V 14 ML3**		**BE160L4**	**BX160L4**				30,500	37,300	13,200
4.0	255,400	2.3	446	**3/V 15 ML3**		**BE160L4**	**BX160L4**				30,100	36,700	12,700
4.0	295,200	2.4	498	**3/V 15 ML3**		**BE160L4**	**BX160L4**				30,500	37,300	13,200
5.0	211,900	1.7	370	**3/V 13 ML3**		**BE160L4**	**BX160L4**				30,000	37,600	10,600
5.0	231,400	2.3	386	**3/V 15 ML3**		**BE160L4**	**BX160L4**				29,500	35,900	12,100
13.0	91,400	1.1	140		**3/A 07 L2**	**BE160L4**	**BX160L4**	**ME5LA4**	**MX5LA4**	**N250TC**	13,600	18,500	4,320
14.0	84,900	1.2	130		**3/A 07 L2**	**BE160L4**	**BX160L4**	**ME5LA4**	**MX5LA4**	**N250TC**	13,300	18,100	4,210
16.0	71,200	1.1	109		**3/A 07 L2**	**BE160L4**	**BX160L4**	**ME5LA4**	**MX5LA4**	**N250TC**	12,600	17,200	3,970
20.0	58,500	1.0	87.7		**3/A 07 L2**	**BE160L4**	**BX160L4**	**ME5LA4**	**MX5LA4**	**N250TC**	11,800	16,100	3,690
26.0	45,500	1.0	68.3		**3/A 07 L2**	**BE160L4**	**BX160L4**	**ME5LA4**	**MX5LA4**	**N250TC**	11,000	14,900	3,400
29.0	40,100	1.0	60.1		**3/A 06 L2**	**BE160L4**	**BX160L4**	**ME5LA4**	**MX5LA4**	**N250TC**	8,450	10,600	2,530
31	38,200	1.0	57.3		**3/A 07 L2**	**BE160L4**	**BX160L4**	**ME5LA4**	**MX5LA4**	**N250TC**	10,400	14,200	3,210
34	34,500	1.0	51.7		**3/A 06 L2**	**BE160L4**	**BX160L4**	**ME5LA4**	**MX5LA4**	**N250TC**	8,070	10,200	2,410
36	32,800	2.0	49.2		**3/A 07 L2**	**BE160L4**	**BX160L4**	**ME5LA4**	**MX5LA4**	**N250TC**	9,950	13,500	3,050
43	27,400	1.2	41.1		**3/A 06 L2**	**BE160L4**	**BX160L4**	**ME5LA4**	**MX5LA4**	**N250TC**	7,530	9,500	2,230
43	27,700	2.0	41.5		**3/A 07 L2**	**BE160L4**	**BX160L4**	**ME5LA4**	**MX5LA4**	**N250TC**	9,450	12,900	2,880
51	23,300	1.0	34.9		**3/A 06 L2**	**BE160L4**	**BX160L4**	**ME5LA4**	**MX5LA4**	**N250TC**	7,180	9,040	2,110

Bonfiglioli Riduttori

P_1 = 20 hp

n_2 rpm	T_2 in•bs	S	i			IE2	IE3	IE2	IE3	NEMA	Rn_2 [lbs] NHC/HC NPC/PC	HZ/PZ	FZ
54	21,800	1.2	32.7		**3/A 06 L2**	**BE160L4**	**BX160L4**	**ME5LA4**	**MX5LA4**	**N250TC**	7,040	8,870	2,070
55	21,500	2.0	32.3		**3/A 07 L2**	**BE160L4**	**BX160L4**	**ME5LA4**	**MX5LA4**	**N250TC**	8,770	11,900	2,650
64	18,500	1.2	27.7		**3/A 06 L2**	**BE160L4**	**BX160L4**	**ME5LA4**	**MX5LA4**	**N250TC**	6,690	8,440	1,960
65	18,100	2.0	27.1		**3/A 07 L2**	**BE160L4**	**BX160L4**	**ME5LA4**	**MX5LA4**	**N250TC**	8,320	11,300	2,500

P_1 = 25 hp

n_2 rpm	T_2 in•bs	S	i			IE2	IE3	IE2	IE3	NEMA	Rn_2 [lbs] NHC/HC NPC/PC	HZ/PZ	FZ
0.30	3,227,700	1.1	5164	**3/V 19 L4**		**BE180M4**	**BX180M4**				119,500	131,600	45,000
0.40	2,917,100	0.9	4386	**3/V 18 ML4**		**BE180M4**	**BX180M4**				103,000	108,500	45,000
0.40	2,723,600	1.2	4095	**3/V 19 L4**		**BE180M4**	**BX180M4**				115,600	127,300	45,000
0.40	3,035,800	1.0	4457	**3/V 19 L4**		**BE180M4**	**BX180M4**				117,000	128,800	45,000
0.40	3,062,700	1.6	4550	**3/V 21 L4**		**BE180M4**	**BX180M4**				166,000	197,600	269,800
0.40	3,190,600	1.5	5040	**3/V 21 L4**		**BE180M4**	**BX180M4**				168,400	200,500	269,800
0.50	2,324,500	1.1	3495	**3/V 18 ML4**		**BE180M4**	**BX180M4**				99,700	105,000	45,000
0.50	2,458,200	1.1	3696	**3/V 18 ML4**		**BE180M4**	**BX180M4**				100,500	105,900	45,000
0.50	2,480,900	1.9	3600	**3/V 21 L4**		**BE180M4**	**BX180M4**				160,500	191,100	269,800
0.50	2,544,400	1.6	3780	**3/V 21 L4**		**BE180M4**	**BX180M4**				161,700	192,400	269,800
0.60	1,958,700	1.2	2945	**3/V 18 ML4**		**BE180M4**	**BX180M4**				97,300	102,500	45,000
0.60	2,200,700	1.4	3231	**3/V 19 L4**		**BE180M4**	**BX180M4**				111,700	123,000	45,000
0.70	1,678,300	1.6	2464	**3/V 18 ML4**		**BE180M4**	**BX180M4**				94,900	99,900	45,000
0.70	1,758,700	1.8	2582	**3/V 19 L4**		**BE180M4**	**BX180M4**				108,200	119,200	45,000
0.70	1,736,600	2.6	2520	**3/V 21 L4**		**BE180M4**	**BX180M4**				152,600	181,600	269,800
0.70	1,904,000	2.5	2700	**3/V 21 L4**		**BE180M4**	**BX180M4**				154,100	183,400	269,800
0.80	1,526,400	1.2	2295	**3/V 18 ML4**		**BE180M4**	**BX180M4**				93,900	98,900	45,000
0.90	1,456,200	1.1	2065	**3/V 17 ML4**		**BE180M4**	**BX180M4**				90,700	96,300	33,700
1.0	856,400	0.9	1329	**3/V 15 ML3**		**BE180M4**	**BX180M4**				35,100	42,900	18,300
1.0	831,300	1.2	1324	**3/V 16 ML3**		**BE180M4**	**BX180M4**				54,700	61,400	30,400
1.0	997,600	1.0	1589	**3/V 16 ML3**		**BE180M4**	**BX180M4**				56,100	63,000	32,300
1.0	843,100	1.5	1215	**3/V 17 ML3**		**BE180M4**	**BX180M4**				84,100	89,300	29,600
1.0	890,800	1.5	1365	**3/V 17 ML3**		**BE180M4**	**BX180M4**				85,500	90,800	30,800
1.0	1,212,400	1.3	1780	**3/V 17 ML4**		**BE180M4**	**BX180M4**				88,800	94,300	33,600
1.0	878,600	2.8	1232	**3/V 18 ML4**		**BE180M4**	**BX180M4**				85,900	90,500	39,600
1.0	1,038,700	2.2	1473	**3/V 18 ML4**		**BE180M4**	**BX180M4**				88,100	92,800	42,100
1.0	1,232,600	2.1	1748	**3/V 18 ML4**		**BE180M4**	**BX180M4**				90,300	95,100	44,500
1.0	1,303,100	2.0	1848	**3/V 18 ML4**		**BE180M4**	**BX180M4**				91,000	95,900	45,000
2.0	576,000	1.2	840	**3/V 15 ML3**		**BE180M4**	**BX180M4**				32,900	40,200	15,700
2.0	683,600	1.1	997	**3/V 15 ML3**		**BE180M4**	**BX180M4**				33,700	41,200	16,600
2.0	721,700	1.1	1120	**3/V 15 ML3**		**BE180M4**	**BX180M4**				34,300	41,900	17,300
2.0	551,000	1.6	794	**3/V 16 ML3**		**BE180M4**	**BX180M4**				50,800	57,000	25,700
2.0	582,800	1.5	893	**3/V 16 ML3**		**BE180M4**	**BX180M4**				51,700	58,000	26,700
2.0	691,100	1.5	1059	**3/V 16 ML3**		**BE180M4**	**BX180M4**				53,000	59,400	28,300
2.0	575,500	2.0	810	**3/V 17 ML3**		**BE180M4**	**BX180M4**				79,300	84,300	25,800
2.0	590,500	1.6	851	**3/V 17 ML3**		**BE180M4**	**BX180M4**				79,900	84,900	26,300
2.0	710,600	1.6	1024	**3/V 17 ML3**		**BE180M4**	**BX180M4**				82,000	87,200	27,900
2.0	740,100	1.5	1134	**3/V 17 ML3**		**BE180M4**	**BX180M4**				83,200	88,400	28,900
2.0	830,900	3.0	1165	**3/V 18 ML4**		**BE180M4**	**BX180M4**				85,200	89,800	38,900
3.0	386,900	0.9	551	**3/V 11 ML3**		**BE180M4**	**BX180M4**				22,900	23,900	9,850
3.0	362,300	1.2	516	**3/V 13 ML3**		**BE180M4**	**BX180M4**				31,500	39,400	11,900
3.0	398,100	1.0	567	**3/V 13 ML3**		**BE180M4**	**BX180M4**				31,900	39,900	12,200
3.0	472,600	0.9	673	**3/V 13 ML3**		**BE180M4**	**BX180M4**				32,700	40,900	13,000
3.0	420,900	1.1	579	**3/V 14 ML3**		**BE180M4**	**BX180M4**				31,200	38,100	13,900
3.0	467,000	1.3	665	**3/V 14 ML3**		**BE180M4**	**BX180M4**				31,800	38,800	14,500
3.0	393,200	1.8	560	**3/V 15 ML3**		**BE180M4**	**BX180M4**				31,100	37,900	13,700

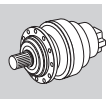

A

P_1 = 25 hp

n_2 rpm	T_2 in•bs	S	i			IE2	IE3	IE2	IE3	NEMA	Rn_2 [lbs] NHC/HC NPC/PC	HZ/PZ	FZ
3.0	467,000	1.6	665	**3/V 15 ML3**		**BE180M4**	**BX180M4**				31,800	38,800	14,500
3.0	376,500	2.6	530	**3/V 16 ML3**		**BE180M4**	**BX180M4**				48,000	53,800	22,400
3.0	464,200	1.6	669	**3/V 16 ML3**		**BE180M4**	**BX180M4**				49,600	55,700	24,200
3.0	402,800	2.6	567	**3/V 17 ML3**		**BE180M4**	**BX180M4**				75,400	80,100	22,900
3.0	442,000	2.5	608	**3/V 17 ML3**		**BE180M4**	**BX180M4**				76,100	80,900	23,500
3.0	485,200	2.6	683	**3/V 17 ML3**		**BE180M4**	**BX180M4**				77,400	82,200	24,400
4.0	301,900	1.1	430	**3/V 11 ML3**		**BE180M4**	**BX180M4**				22,100	23,100	9,060
4.0	309,000	1.3	425	**3/V 13 ML3**		**BE180M4**	**BX180M4**				30,600	38,300	11,100
4.0	288,600	1.4	399	**3/V 14 ML3**		**BE180M4**	**BX180M4**				29,600	36,100	12,200
4.0	313,200	1.3	446	**3/V 14 ML3**		**BE180M4**	**BX180M4**				30,100	36,700	12,700
4.0	362,000	1.4	498	**3/V 14 ML3**		**BE180M4**	**BX180M4**				30,500	37,300	13,200
4.0	313,200	1.8	446	**3/V 15 ML3**		**BE180M4**	**BX180M4**				30,100	36,700	12,700
4.0	362,000	2.0	498	**3/V 15 ML3**		**BE180M4**	**BX180M4**				30,500	37,300	13,200
4.0	316,900	2.6	446	**3/V 16 ML3**		**BE180M4**	**BX180M4**				46,800	52,500	21,200
5.0	259,800	1.3	370	**3/V 13 ML3**		**BE180M4**	**BX180M4**				30,000	37,600	10,600
5.0	283,800	1.9	386	**3/V 15 ML3**		**BE180M4**	**BX180M4**				29,500	35,900	12,100
14.0	104,100	0.9	130		**3/A 07 L2**	**BE180M4**	**BX180M4**				13,300	18,100	4,210
36	40,200	1.6	49.2		**3/A 07 L2**	**BE180M4**	**BX180M4**				9,950	13,500	3,050
43	33,600	1.0	41.1		**3/A 06 L2**	**BE180M4**	**BX180M4**				7,530	9,500	2,230
43	33,900	1.6	41.5		**3/A 07 L2**	**BE180M4**	**BX180M4**				9,450	12,900	2,880
54	26,700	1.0	32.7		**3/A 06 L2**	**BE180M4**	**BX180M4**				7,040	8,870	2,070
55	26,400	1.6	32.3		**3/A 07 L2**	**BE180M4**	**BX180M4**				8,770	11,900	2,650
64	22,600	1.0	27.7		**3/A 06 L2**	**BE180M4**	**BX180M4**				6,690	8,440	1,960
66	22,200	1.6	27.1		**3/A 07 L2**	**BE180M4**	**BX180M4**				8,320	11,300	2,500

P_1 = 30 hp

n_2 rpm	T_2 in•bs	S	i			IE2	IE3	IE2	IE3	NEMA	Rn_2 [lbs] NHC/HC NPC/PC	HZ/PZ	FZ
0.30	3,841,600	0.9	5164	**3/V 19 L4**		**BE180L4**	**BX180L4**				119,500	131,600	45,000
0.40	3,241,600	1.0	4095	**3/V 19 L4**		**BE180L4**	**BX180L4**				115,600	127,300	45,000
0.40	3,645,200	1.3	4550	**3/V 21 L4**		**BE180L4**	**BX180L4**				166,000	197,600	269,800
0.40	3,797,400	1.3	5040	**3/V 21 L4**		**BE180L4**	**BX180L4**				168,400	200,500	269,800
0.50	2,766,700	1.0	3495	**3/V 18 ML4**		**BE180L4**	**BX180L4**				99,700	105,000	45,000
0.50	2,925,800	0.9	3696	**3/V 18 ML4**		**BE180L4**	**BX180L4**				100,500	105,900	45,000
0.50	2,619,300	1.2	3231	**3/V 19 L4**		**BE180L4**	**BX180L4**				111,700	123,000	45,000
0.50	2,952,800	1.6	3600	**3/V 21 L4**		**BE180L4**	**BX180L4**				160,500	191,100	269,800
0.50	3,028,300	1.3	3780	**3/V 21 L4**		**BE180L4**	**BX180L4**				161,700	192,400	269,800
0.60	2,331,300	1.0	2945	**3/V 18 ML4**		**BE180L4**	**BX180L4**				97,300	102,500	45,000
0.70	1,997,500	1.3	2464	**3/V 18 ML4**		**BE180L4**	**BX180L4**				94,900	99,900	45,000
0.70	2,093,200	1.5	2582	**3/V 19 L4**		**BE180L4**	**BX180L4**				108,200	119,200	45,000
0.70	2,067,000	2.2	2520	**3/V 21 L4**		**BE180L4**	**BX180L4**				152,600	181,600	269,800
0.70	2,266,100	2.1	2700	**3/V 21 L4**		**BE180L4**	**BX180L4**				154,100	183,400	269,800
0.80	1,816,700	1.0	2295	**3/V 18 ML4**		**BE180L4**	**BX180L4**				93,900	98,900	45,000
0.80	1,909,400	2.6	2275	**3/V 21 L4**		**BE180L4**	**BX180L4**				150,300	179,000	269,800
0.90	1,733,100	0.9	2065	**3/V 17 ML4**		**BE180L4**	**BX180L4**				90,700	96,300	33,700
0.90	1,586,300	2.6	1890	**3/V 21 L4**		**BE180L4**	**BX180L4**				146,400	174,300	269,800
1.0	989,400	1.0	1324	**3/V 16 ML3**		**BE180L4**	**BX180L4**				54,700	61,400	30,400
1.0	1,003,500	1.2	1215	**3/V 17 ML3**		**BE180L4**	**BX180L4**				84,100	89,300	29,600
1.0	1,060,300	1.3	1365	**3/V 17 ML3**		**BE180L4**	**BX180L4**				85,500	90,800	30,800
1.0	1,443,000	1.1	1780	**3/V 17 ML4**		**BE180L4**	**BX180L4**				88,800	94,300	33,600
1.0	1,045,800	2.4	1232	**3/V 18 ML4**		**BE180L4**	**BX180L4**				85,900	90,500	39,600

Bonfiglioli Riduttori

P_1 = 30 hp

n_2 rpm	T_2 in•bs	S	i			IE2	IE3	IE2	IE3	NEMA	Rn_2 [lbs] NHC/HC NPC/PC	HZ/PZ	FZ
1.0	1,236,300	1.8	1473	**3/V 18 ML4**		**BE180L4**	**BX180L4**				88,100	92,800	42,100
1.0	1,467,100	1.8	1748	**3/V 18 ML4**		**BE180L4**	**BX180L4**				90,300	95,100	44,500
1.0	1,551,000	1.7	1848	**3/V 18 ML4**		**BE180L4**	**BX180L4**				91,000	95,900	45,000
2.0	685,500	1.0	840	**3/V 15 ML3**		**BE180L4**	**BX180L4**				32,900	40,200	15,700
2.0	813,600	0.9	997	**3/V 15 ML3**		**BE180L4**	**BX180L4**				33,700	41,200	16,600
2.0	859,000	0.9	1120	**3/V 15 ML3**		**BE180L4**	**BX180L4**				34,300	41,900	17,300
2.0	655,800	1.3	794	**3/V 16 ML3**		**BE180L4**	**BX180L4**				50,800	57,000	25,700
2.0	693,600	1.3	893	**3/V 16 ML3**		**BE180L4**	**BX180L4**				51,700	58,000	26,700
2.0	822,600	1.2	1059	**3/V 16 ML3**		**BE180L4**	**BX180L4**				53,000	59,400	28,300
2.0	684,900	1.7	810	**3/V 17 ML3**		**BE180L4**	**BX180L4**				79,300	84,300	25,800
2.0	702,900	1.3	851	**3/V 17 ML3**		**BE180L4**	**BX180L4**				79,900	84,900	26,300
2.0	845,700	1.3	1024	**3/V 17 ML3**		**BE180L4**	**BX180L4**				82,000	87,200	27,900
2.0	880,800	1.3	1134	**3/V 17 ML3**		**BE180L4**	**BX180L4**				83,200	88,400	28,900
2.0	649,400	2.5	765	**3/V 18 ML4**		**BE180L4**	**BX180L4**				80,300	84,500	33,800
2.0	833,600	2.5	982	**3/V 18 ML4**		**BE180L4**	**BX180L4**				83,200	87,600	36,700
2.0	988,900	2.5	1165	**3/V 18 ML4**		**BE180L4**	**BX180L4**				85,200	89,800	38,900
3.0	431,200	1.0	516	**3/V 13 ML3**		**BE180L4**	**BX180L4**				31,500	39,400	11,900
3.0	501,000	0.9	579	**3/V 14 ML3**		**BE180L4**	**BX180L4**				31,200	38,100	13,900
3.0	555,800	1.1	665	**3/V 14 ML3**		**BE180L4**	**BX180L4**				31,800	38,800	14,500
3.0	468,000	1.5	560	**3/V 15 ML3**		**BE180L4**	**BX180L4**				31,100	37,900	13,700
3.0	555,800	1.3	665	**3/V 15 ML3**		**BE180L4**	**BX180L4**				31,800	38,800	14,500
3.0	448,200	2.2	530	**3/V 16 ML3**		**BE180L4**	**BX180L4**				48,000	53,800	22,400
3.0	552,500	1.3	669	**3/V 16 ML3**		**BE180L4**	**BX180L4**				49,600	55,700	24,200
3.0	443,000	2.6	512	**3/V 17 ML3**		**BE180L4**	**BX180L4**				74,300	78,900	22,200
3.0	479,400	2.2	567	**3/V 17 ML3**		**BE180L4**	**BX180L4**				75,400	80,100	22,900
3.0	526,100	2.1	608	**3/V 17 ML3**		**BE180L4**	**BX180L4**				76,100	80,900	23,500
3.0	577,500	2.2	683	**3/V 17 ML3**		**BE180L4**	**BX180L4**				77,400	82,200	24,400
4.0	359,400	0.9	430	**3/V 11 ML3**		**BE180L4**	**BX180L4**				22,100	23,100	9,060
4.0	367,700	1.1	425	**3/V 13 ML3**		**BE180L4**	**BX180L4**				30,600	38,300	11,100
4.0	343,500	1.2	399	**3/V 14 ML3**		**BE180L4**	**BX180L4**				29,600	36,100	12,200
4.0	372,700	1.1	446	**3/V 14 ML3**		**BE180L4**	**BX180L4**				30,100	36,700	12,700
4.0	430,900	1.2	498	**3/V 14 ML3**		**BE180L4**	**BX180L4**				30,500	37,300	13,200
4.0	372,700	1.5	446	**3/V 15 ML3**		**BE180L4**	**BX180L4**				30,100	36,700	12,700
4.0	430,900	1.7	498	**3/V 15 ML3**		**BE180L4**	**BX180L4**				30,500	37,300	13,200
4.0	343,500	2.6	399	**3/V 16 ML3**		**BE180L4**	**BX180L4**				46,100	51,700	20,400
4.0	377,100	2.2	446	**3/V 16 ML3**		**BE180L4**	**BX180L4**				46,800	52,500	21,200
4.0	358,400	2.9	405	**3/V 17 ML3**		**BE180L4**	**BX180L4**				71,900	76,300	20,500
4.0	367,700	2.6	425	**3/V 17 ML3**		**BE180L4**	**BX180L4**				72,400	76,900	20,800
5.0	309,200	1.1	370	**3/V 13 ML3**		**BE180L4**	**BX180L4**				30,000	37,600	10,600
5.0	337,800	1.6	386	**3/V 15 ML3**		**BE180L4**	**BX180L4**				29,500	35,900	12,100
36	47,900	1.3	49.2		**3/A 07 L2**	**BE180L4**	**BX180L4**			**N280TC**	9,950	13,500	3,050
43	40,400	1.3	41.5		**3/A 07 L2**	**BE180L4**	**BX180L4**			**N280TC**	9,450	12,900	2,880
55	31,400	1.3	32.3		**3/A 07 L2**	**BE180L4**	**BX180L4**			**N280TC**	8,770	11,900	2,650
65	26,400	1.3	27.1		**3/A 07 L2**	**BE180L4**	**BX180L4**			**N280TC**	8,320	11,300	2,500

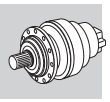

A

P_1 = 40 hp

n_2 rpm	T_2 in•bs	S	i			IE2	IE3	IE2	IE3	NEMA	Rn_2 [lbs] NHC/HC NPC/PC	HZ/PZ	FZ
0.30	5,210,400	0.9	5040	**3/V 21 L4**		**IEC200L4**					168,400	200,500	269,800
0.40	5,001,500	1.0	4550	**3/V 21 L4**		**IEC200L4**					166,000	197,600	269,800
0.50	4,051,500	1.2	3600	**3/V 21 L4**		**IEC200L4**					160,500	191,100	269,800
0.50	4,155,100	1.0	3780	**3/V 21 L4**		**IEC200L4**					161,700	192,400	269,800
0.70	2,740,800	1.0	2464	**3/V 18 ML4**		**IEC200L4**					94,900	99,900	45,000
0.70	2,872,000	1.1	2582	**3/V 19 L4**		**IEC200L4**					108,200	119,200	45,000
0.70	2,836,000	1.6	2520	**3/V 21 L4**		**IEC200L4**					152,600	181,600	269,800
0.70	3,109,300	1.5	2700	**3/V 21 L4**		**IEC200L4**					154,100	183,400	269,800
0.80	2,619,800	1.9	2275	**3/V 21 L4**		**IEC200L4**					150,300	179,000	269,800
0.90	2,176,500	1.9	1890	**3/V 21 L4**		**IEC200L4**					146,400	174,300	269,800
1.0	1,376,900	0.9	1215	**3/V 17 ML3**		**IEC200L4**					84,100	89,300	29,600
1.0	1,454,800	0.9	1365	**3/V 17 ML3**		**IEC200L4**					85,500	90,800	30,800
1.0	1,434,900	1.7	1232	**3/V 18 ML4**		**IEC200L4**					85,900	90,500	39,600
1.0	1,696,300	1.3	1473	**3/V 18 ML4**		**IEC200L4**					88,100	92,800	42,100
1.0	2,013,000	1.3	1748	**3/V 18 ML4**		**IEC200L4**					90,300	95,100	44,500
1.0	2,128,100	1.2	1848	**3/V 18 ML4**		**IEC200L4**					91,000	95,900	45,000
1.0	1,484,000	2.5	1260	**3/V 21 L4**		**IEC200L4**					138,200	164,500	242,400
1.0	1,786,600	2.5	1517	**3/V 21 L4**		**IEC200L4**					141,900	168,900	256,300
1.0	2,119,900	2.2	1800	**3/V 21 L4**		**IEC200L4**					145,400	173,100	269,800
2.0	899,800	1.0	794	**3/V 16 ML3**		**IEC200L4**					50,800	57,000	25,700
2.0	951,700	0.9	893	**3/V 16 ML3**		**IEC200L4**					51,700	58,000	26,700
2.0	1,128,700	0.9	1059	**3/V 16 ML3**		**IEC200L4**					53,000	59,400	28,300
2.0	939,800	1.2	810	**3/V 17 ML3**		**IEC200L4**					79,300	84,300	25,800
2.0	964,400	1.0	851	**3/V 17 ML3**		**IEC200L4**					79,900	84,900	26,300
2.0	1,160,400	1.0	1024	**3/V 17 ML3**		**IEC200L4**					82,000	87,200	27,900
2.0	1,208,600	0.9	1134	**3/V 17 ML3**		**IEC200L4**					83,200	88,400	28,900
2.0	891,000	1.8	765	**3/V 18 ML4**		**IEC200L4**					80,300	84,500	33,800
2.0	1,143,700	1.8	982	**3/V 18 ML4**		**IEC200L4**					83,200	87,600	36,700
2.0	1,356,800	1.8	1165	**3/V 18 ML4**		**IEC200L4**					85,200	89,800	38,900
3.0	642,200	1.1	560	**3/V 15 ML3**		**IEC200L4**					31,100	37,900	13,700
3.0	762,600	1.0	665	**3/V 15 ML3**		**IEC200L4**					31,800	38,800	14,500
3.0	614,900	1.6	530	**3/V 16 ML3**		**IEC200L4**					48,000	53,800	22,400
3.0	758,100	1.0	669	**3/V 16 ML3**		**IEC200L4**					49,600	55,700	24,200
3.0	607,800	1.9	512	**3/V 17 ML3**		**IEC200L4**					74,300	78,900	22,200
3.0	657,800	1.6	567	**3/V 17 ML3**		**IEC200L4**					75,400	80,100	22,900
3.0	721,800	1.5	608	**3/V 17 ML3**		**IEC200L4**					76,100	80,900	23,500
3.0	792,400	1.6	683	**3/V 17 ML3**		**IEC200L4**					77,400	82,200	24,400
4.0	511,400	1.1	446	**3/V 15 ML3**		**IEC200L4**					30,100	36,700	12,700
4.0	591,200	1.2	498	**3/V 15 ML3**		**IEC200L4**					30,500	37,300	13,200
4.0	471,300	1.9	399	**3/V 16 ML3**		**IEC200L4**					46,100	51,700	20,400
4.0	517,500	1.6	446	**3/V 16 ML3**		**IEC200L4**					46,800	52,500	21,200
4.0	491,700	2.1	405	**3/V 17 ML3**		**IEC200L4**					71,900	76,300	20,500
4.0	504,600	1.9	425	**3/V 17 ML3**		**IEC200L4**					72,400	76,900	20,800
5.0	464,500	1.2	386	**3/V 15 ML3**		**IEC200L4**					29,500	35,900	12,100

P_1 = 50 hp

n_2 rpm	T_2 in•bs	S	i			IE2	IE3	IE2	IE3	NEMA	Rn_2 [lbs] NHC/HC NPC/PC	HZ/PZ	FZ
0.50	4,989,300	1.0	3600	**3/V 21 L4**		**IEC225S4**					160,500	191,100	269,800
0.70	3,536,800	0.9	2582	**3/V 19 L4**		**IEC225S4**					108,200	119,200	45,000
0.70	3,492,500	1.3	2520	**3/V 21 L4**		**IEC225S4**					152,600	181,600	269,800
0.70	3,829,000	1.2	2700	**3/V 21 L4**		**IEC225S4**					154,100	183,400	269,800

The technical information shall be considered as indicative, the configurations should be matching the data provided by motors manufacturers on rated powers greater than 30 HP.

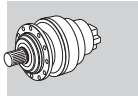

A

P_1 = 50 hp

n_2 rpm	T_2 in•bs	S	i			IE2	IE3	IE2	IE3	NEMA	Rn_2 [lbs] NHC/HC NPC/PC	HZ/PZ	FZ
0.80	3,226,300	1.5	2275	**3/V 21 L4**		**IEC225S4**					150,300	179,000	269,800
0.90	2,680,300	1.5	1890	**3/V 21 L4**		**IEC225S4**					146,400	174,300	269,800
1.0	1,767,000	1.4	1232	**3/V 18 ML4**		**IEC225S4**					85,900	90,500	39,600
1.0	2,088,900	1.1	1473	**3/V 18 ML4**		**IEC225S4**					88,100	92,800	42,100
1.0	2,499,900	1.1	1748	**3/V 18 ML4**		**IEC225S4**					90,300	95,100	44,500
1.0	2,620,700	1.0	1848	**3/V 18 ML4**		**IEC225S4**					91,000	95,900	45,000
1.0	1,827,500	2.1	1260	**3/V 21 L4**		**IEC225S4**					138,200	164,500	242,400
1.0	2,200,200	2.1	1517	**3/V 21 L4**		**IEC225S4**					141,900	168,900	256,300
1.0	2,610,700	1.8	1800	**3/V 21 L4**		**IEC225S4**					145,400	173,100	269,800
2.0	1,157,300	1.0	810	**3/V 17 ML3**		**IEC225S4**					79,300	84,300	25,800
2.0	1,097,200	1.5	765	**3/V 18 ML4**		**IEC225S4**					80,300	84,500	33,800
2.0	1,408,400	1.5	982	**3/V 18 ML4**		**IEC225S4**					83,200	87,600	36,700
2.0	1,670,900	1.5	1165	**3/V 18 ML4**		**IEC225S4**					85,200	89,800	38,900
2.0	1,557,400	2.5	1062	**3/V 21 L4**		**IEC225S4**					134,800	160,500	230,300
3.0	790,800	0.9	560	**3/V 15 ML3**		**IEC225S4**					31,100	37,900	13,700
3.0	757,300	1.3	530	**3/V 16 ML3**		**IEC225S4**					48,000	53,800	22,400
3.0	748,500	1.5	512	**3/V 17 ML3**		**IEC225S4**					74,300	78,900	22,200
3.0	810,100	1.3	567	**3/V 17 ML3**		**IEC225S4**					75,400	80,100	22,900
3.0	888,900	1.2	608	**3/V 17 ML3**		**IEC225S4**					76,100	80,900	23,500
3.0	975,900	1.3	683	**3/V 17 ML3**		**IEC225S4**					77,400	82,200	24,400
4.0	629,800	0.9	446	**3/V 15 ML3**		**IEC225S4**					30,100	36,700	12,700
4.0	728,100	1.0	498	**3/V 15 ML3**		**IEC225S4**					30,500	37,300	13,200
4.0	580,400	1.5	399	**3/V 16 ML3**		**IEC225S4**					46,100	51,700	20,400
4.0	637,200	1.3	446	**3/V 16 ML3**		**IEC225S4**					46,800	52,500	21,200
4.0	605,600	1.7	405	**3/V 17 ML3**		**IEC225S4**					71,900	76,300	20,500
4.0	621,400	1.5	425	**3/V 17 ML3**		**IEC225S4**					72,400	76,900	20,800
5.0	570,700	0.9	386	**3/V 15 ML3**		**IEC225S4**					29,500	35,900	12,100

P_1 = 60 hp

n_2 rpm	T_2 in•bs	S	i			IE2	IE3	IE2	IE3	NEMA	Rn_2 [lbs] NHC/HC NPC/PC	HZ/PZ	FZ
0.70	4,236,500	1.1	2520	**3/V 21 L4**		**IEC225M4**					152,600	181,600	269,800
0.70	4,644,700	1.0	2700	**3/V 21 L4**		**IEC225M4**					154,100	183,400	269,800
0.80	3,913,600	1.3	2275	**3/V 21 L4**		**IEC225M4**					150,300	179,000	269,800
0.90	3,251,300	1.3	1890	**3/V 21 L4**		**IEC225M4**					146,400	174,300	269,800
1.0	2,143,400	1.2	1232	**3/V 18 ML4**		**IEC225M4**					85,900	90,500	39,600
1.0	2,216,800	1.7	1260	**3/V 21 L4**		**IEC225M4**					138,200	164,500	242,400
1.0	2,668,900	1.7	1517	**3/V 21 L4**		**IEC225M4**					141,900	168,900	256,300
1.0	3,166,800	1.5	1800	**3/V 21 L4**		**IEC225M4**					145,400	173,100	269,800
2.0	1,331,000	1.2	765	**3/V 18 ML4**		**IEC225M4**					80,300	84,500	33,800
2.0	1,708,500	1.2	982	**3/V 18 ML4**		**IEC225M4**					83,200	87,600	36,700
2.0	2,026,900	1.2	1165	**3/V 18 ML4**		**IEC225M4**					85,200	89,800	38,900
2.0	1,889,200	2.1	1062	**3/V 21 L4**		**IEC225M4**					134,800	160,500	230,300
3.0	918,600	1.1	530	**3/V 16 ML3**		**IEC225M4**					48,000	53,800	22,400
3.0	908,000	1.3	512	**3/V 17 ML3**		**IEC225M4**					74,300	78,900	22,200
3.0	982,700	1.1	567	**3/V 17 ML3**		**IEC225M4**					75,400	80,100	22,900
3.0	1,078,300	1.0	608	**3/V 17 ML3**		**IEC225M4**					76,100	80,900	23,500
3.0	1,183,700	1.1	683	**3/V 17 ML3**		**IEC225M4**					77,400	82,200	24,400
4.0	704,100	1.3	399	**3/V 16 ML3**		**IEC225M4**					46,100	51,700	20,400
4.0	773,000	1.1	446	**3/V 16 ML3**		**IEC225M4**					46,800	52,500	21,200
4.0	734,600	1.4	405	**3/V 17 ML3**		**IEC225M4**					71,900	76,300	20,500
4.0	753,700	1.3	425	**3/V 17 ML3**		**IEC225M4**					72,400	76,900	20,800

The technical information shall be considered as indicative, the configurations should be matching the data provided by motors manufacturers on rated powers greater than 30 HP.

25.3 RATING CHARTS FOR INLINE UNITS 300M L

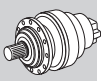

Reading the rating chart.

310M L	373	297,740 lb•in

n_1 rpm		i	n_2 rpm	T_{n2} lb•in	P_{n1} hp	P (IEC)	NEMA	Rn_2 [lbs] NHC/NPC	HZ/PZ	FZ	$T_{n2\ max}$ lb•in
1800	**310ML2**	14.7	**122**	125,000	101	160 to 250	N320TC to N360TC	8,130	10,500	2,940	421,296
	310ML2	17.4	**104**	129,400	101	160 to 250	N320TC to N360TC	8,540	11,000	3,110	421,296
	310ML2	21.8	**83**	134,800	101	160 to 250	N320TC to N360TC	9,140	11,800	3,360	421,296
	310ML2	25.4	**71**	139,800	101	160 to 250	N320TC to N360TC	9,570	12,400	3,530	421,296
	310ML2	28.0	**64**	170,000	101	160 to 250	N320TC to N360TC	9,850	12,700	3,650	421,296
	310ML2	30.7	**59**	144,400	101	160 to 250	N320TC to N360TC	10,100	13,100	3,760	421,296
	310ML2	32.6	**55**	177,800	101	160 to 250	N320TC to N360TC	10,300	13,300	3,840	421,296
	310ML2	38.6	**47**	157,600	101	160 to 250	N320TC to N360TC	10,900	14,000	4,060	421,296
	310ML2	46.7	**39**	157,600	101	160 to 250	N320TC to N360TC	11,500	14,800	4,330	421,296

The rated torque of the gearbox, independent of installed mechanical power

1	Reference torque
2	Gearbox drive speed
3	Frame size of the in-line gear unit
4	Gear ratio
5	Gearbox output speed
6	Gearbox rated output torque based on: - service factor f_S=1 - 10000 h theoretical lifetime
7	Gearbox rated input power, based on: - service factor f_S=1 - 10000 h theoretical lifetime
8	Frame size of available IEC motor
9	Frame size of available NEMA motor
10	Permitted overhung loading on output shaft, based on: - service factor f_S=1 - 10000 h theoretical lifetime - speed of output n_2 For forces not applied at shaft middlepoint, see diagrams provided in the specific gearbox overall dimensioning pages
11	Maximum torque
12	Dimensions page

300 L	235	11,060 lb•in

n_1 rpm		i	n_2 rpm	T_{n2} lb•in	P_{n1} hp	P (IEC)	NEMA	Rn_2 [lbs] NHC/NPC	HZ/PZ	FZ	$T_{n2\ max}$ lb•in
1800	**300L1**	**3.48**	517	3,950	26.8	71 to 132	N56C to N280TC	1,360	1,720	220	17,702
	300L1	**4.26**	422	4,140	26.8	71 to 132	N56C to N280TC	1,450	1,830	240	21,242
	300L1	**5.77**	312	3,960	20.2	71 to 132	N56C to N280TC	1,590	2,000	270	21,242
	300L1	**7.20**	250	3,430	14.0	71 to 132	N56C to N280TC	1,690	2,140	290	21,242
	300L1	**9.00**	200	2,660	8.7	71 to 132	N56C to N280TC	1,810	2,290	310	21,242
	300L2	**12.1**	149	5,740	14.4	71 to 132	N56C to N280TC	1,980	2,500	340	17,702
	300L2	**14.8**	121	6,010	12.3	71 to 132	N56C to N280TC	2,110	2,660	360	17,702
	300L2	**18.2**	99	6,390	10.7	71 to 132	N56C to N280TC	2,240	2,820	390	21,242
	300L2	**20.1**	90	5,600	8.5	71 to 132	N56C to N280TC	2,310	2,910	400	17,702
	300L2	**24.6**	73	6,830	8.4	71 to 132	N56C to N280TC	2,450	3,090	430	21,242
	300L2	**30.7**	59	7,180	7.1	71 to 132	N56C to N280TC	2,620	3,310	460	21,242
	300L2	**33.3**	54	5,730	5.2	71 to 132	N56C to N280TC	2,680	3,390	480	21,242
	300L2	**38.4**	47	7,440	5.9	71 to 132	N56C to N280TC	2,800	3,530	500	21,242
	300L2	**41.5**	43	5,750	4.2	71 to 132	N56C to N280TC	2,870	3,620	510	21,242
	300L2	**51.9**	35	5,750	3.4	71 to 132	N56C to N280TC	3,070	3,870	550	21,242
	300L2	**64.8**	27.8	4,870	2.3	71 to 132	N56C to N280TC	3,280	4,140	590	21,242
	300L3	**51.6**	35	7,470	4.5	71 to 132	N56C to N280TC	3,060	3,860	550	17,702
	300L3	**63.2**	28.5	7,500	3.7	71 to 132	N56C to N280TC	3,250	4,110	590	21,242
	300L3	**69.9**	25.8	5,750	2.6	71 to 132	N56C to N280TC	3,350	4,230	610	17,702
	300L3	**77.5**	23.2	7,520	3.0	71 to 132	N56C to N280TC	3,460	4,360	630	21,242
	300L3	**85.6**	21.0	7,530	2.8	71 to 132	N56C to N280TC	3,560	4,500	650	21,242
	300L3	**105**	17.2	7,550	2.3	71 to 132	N56C to N280TC	3,790	4,780	700	21,242
	300L3	**116**	15.5	5,750	1.6	71 to 132	N56C to N280TC	3,900	4,920	720	21,242
	300L3	**131**	13.8	7,580	1.8	71 to 132	N56C to N280TC	4,050	5,110	750	21,242
	300L3	**142**	12.7	7,590	1.7	71 to 132	N56C to N280TC	4,140	5,230	770	21,242
	300L3	**177**	10.2	7,610	1.3	71 to 132	N56C to N280TC	4,430	5,590	830	21,242
	300L3	**192**	9.4	5,750	0.94	71 to 132	N56C to N280TC	4,450	5,620	850	21,242
	300L3	**221**	8.1	7,840	1.1	71 to 132	N56C to N280TC	4,450	5,620	890	21,242
	300L3	**240**	7.5	5,750	0.75	71 to 132	N56C to N280TC	4,450	5,620	920	21,242
	300L3	**299**	6.0	5,750	0.60	71 to 132	N56C to N280TC	4,450	5,620	990	21,242
	300L3	**374**	4.8	5,790	0.48	71 to 132	N56C to N280TC	4,480	5,650	1,070	21,242
	300L4	**330**	5.4	8,300	0.81	71 to 132	N56C to N280TC	4,450	5,620	1,020	21,242
	300L4	**403**	4.5	5,860	0.47	71 to 132	N56C to N280TC	4,520	5,710	1,090	21,242
	300L4	**447**	4.0	8,730	0.63	71 to 132	N56C to N280TC	4,590	5,800	1,130	21,242
	300L4	**494**	3.6	8,880	0.58	71 to 132	N56C to N280TC	4,660	5,880	1,170	21,242
	300L4	**558**	3.2	9,060	0.52	71 to 132	N56C to N280TC	4,740	5,980	1,220	21,242
	300L4	**616**	2.9	9,220	0.48	71 to 132	N56C to N280TC	4,810	6,070	1,260	21,242
	300L4	**755**	2.4	9,550	0.41	71 to 132	N56C to N280TC	4,950	6,250	1,350	21,242
	300L4	**819**	2.2	9,680	0.38	71 to 132	N56C to N280TC	5,010	6,320	1,380	21,242
	300L4	**942**	1.9	9,910	0.34	71 to 132	N56C to N280TC	5,110	6,450	1,450	21,242
	300L4	**1022**	1.8	10,000	0.32	71 to 132	N56C to N280TC	5,170	6,520	1,490	21,242
	300L4	**1108**	1.6	6,980	0.20	71 to 132	N56C to N280TC	5,230	6,600	1,530	21,242
	300L4	**1275**	1.4	10,400	0.26	71 to 132	N56C to N280TC	5,330	6,730	1,600	21,242
	300L4	**1383**	1.3	7,260	0.17	71 to 132	N56C to N280TC	5,390	6,810	1,650	21,242
	300L4	**1591**	1.1	10,800	0.22	71 to 132	N56C to N280TC	5,500	6,950	1,730	21,242
	300L4	**1725**	1.0	7,550	0.14	71 to 132	N56C to N280TC	5,570	7,030	1,770	21,242
	300L4	**2153**	0.84	7,610	0.11	71 to 132	N56C to N280TC	5,750	7,260	1,800	21,242
	300L4	**2692**	0.67	8,850	0.11	71 to 132	N56C to N280TC	5,930	7,490	1,800	21,242
1200	**300L1**	**3.48**	345	4,460	25.1	71 to 132	N56C to N280TC	1,540	1,940	260	17,702
	300L1	**4.26**	281	4,670	21.5	71 to 132	N56C to N280TC	1,640	2,060	270	21,242
	300L1	**5.77**	208	4,480	15.2	71 to 132	N56C to N280TC	1,790	2,260	300	21,242
	300L1	**7.20**	167	3,870	10.6	71 to 132	N56C to N280TC	1,910	2,420	330	21,242
	300L1	**9.00**	133	3,000	6.6	71 to 132	N56C to N280TC	2,050	2,580	350	21,242
	300L2	**12.1**	99	6,460	10.8	71 to 132	N56C to N280TC	2,240	2,820	390	17,702
	300L2	**14.8**	81	6,680	9.1	71 to 132	N56C to N280TC	2,380	3,000	420	17,702
	300L2	**18.2**	66	6,990	7.8	71 to 132	N56C to N280TC	2,530	3,190	440	21,242
	300L2	**20.1**	60	5,710	5.8	71 to 132	N56C to N280TC	2,600	3,290	460	17,702
	300L2	**24.6**	49	7,440	6.1	71 to 132	N56C to N280TC	2,770	3,490	490	21,242
	300L2	**30.7**	39	7,460	4.9	71 to 132	N56C to N280TC	2,960	3,730	530	21,242
	300L2	**33.3**	36	5,750	3.5	71 to 132	N56C to N280TC	3,030	3,830	540	21,242
	300L2	**38.4**	31	7,490	3.9	71 to 132	N56C to N280TC	3,160	3,990	570	21,242

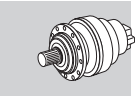

B

300 L

235

11,060 lb•in

n_1 rpm		i	n_2 rpm	T_{n2} lb•in	P_{n1} hp	P (IEC)	NEMA	Rn_2 [lbs] NHC/NPC	HZ/PZ	FZ	$T_{n2\ max}$ lb•in
1200	**300L2**	**41.5**	28.9	5,750	2.8	71 to 132	N56C to N280TC	3,240	4,090	590	21,242
	300L2	**51.9**	23.1	5,750	2.2	71 to 132	N56C to N280TC	3,460	4,370	630	21,242
	300L2	**64.8**	18.5	4,870	1.5	71 to 132	N56C to N280TC	3,700	4,670	680	21,242
	300L3	**51.6**	23.2	7,520	3.0	71 to 132	N56C to N280TC	3,460	4,360	630	17,702
	300L3	**63.2**	19.0	7,540	2.5	71 to 132	N56C to N280TC	3,670	4,640	670	21,242
	300L3	**69.9**	17.2	5,750	1.7	71 to 132	N56C to N280TC	3,780	4,780	700	17,702
	300L3	**77.5**	15.5	7,560	2.0	71 to 132	N56C to N280TC	3,900	4,930	720	21,242
	300L3	**85.6**	14.0	7,570	1.8	71 to 132	N56C to N280TC	4,020	5,080	750	21,242
	300L3	**105**	11.4	7,600	1.5	71 to 132	N56C to N280TC	4,270	5,400	800	21,242
	300L3	**116**	10.4	5,750	1.0	71 to 132	N56C to N280TC	4,400	5,560	820	21,242
	300L3	**131**	9.2	7,710	1.2	71 to 132	N56C to N280TC	4,450	5,620	860	21,242
	300L3	**142**	8.5	7,800	1.1	71 to 132	N56C to N280TC	4,450	5,620	880	21,242
	300L3	**177**	6.8	8,050	0.95	71 to 132	N56C to N280TC	4,450	5,620	950	21,242
	300L3	**192**	6.2	5,750	0.62	71 to 132	N56C to N280TC	4,450	5,620	980	21,242
	300L3	**221**	5.4	8,310	0.78	71 to 132	N56C to N280TC	4,450	5,620	1,020	21,242
	300L3	**240**	5.0	5,750	0.50	71 to 132	N56C to N280TC	4,450	5,620	1,050	21,242
	300L3	**299**	4.0	5,970	0.42	71 to 132	N56C to N280TC	4,590	5,800	1,130	21,242
	300L3	**374**	3.2	6,200	0.35	71 to 132	N56C to N280TC	4,740	5,990	1,220	21,242
	300L4	**330**	3.6	8,880	0.58	71 to 132	N56C to N280TC	4,660	5,880	1,170	21,242
	300L4	**403**	3.0	6,270	0.33	71 to 132	N56C to N280TC	4,790	6,050	1,250	21,242
	300L4	**447**	2.7	9,360	0.45	71 to 132	N56C to N280TC	4,860	6,140	1,290	21,242
	300L4	**494**	2.4	9,520	0.41	71 to 132	N56C to N280TC	4,930	6,230	1,340	21,242
	300L4	**558**	2.2	9,710	0.37	71 to 132	N56C to N280TC	5,020	6,340	1,390	21,242
	300L4	**616**	1.9	9,880	0.34	71 to 132	N56C to N280TC	5,090	6,430	1,440	21,242
	300L4	**755**	1.6	10,200	0.29	71 to 132	N56C to N280TC	5,240	6,620	1,540	21,242
	300L4	**819**	1.5	10,400	0.27	71 to 132	N56C to N280TC	5,300	6,700	1,580	21,242
	300L4	**942**	1.3	10,600	0.24	71 to 132	N56C to N280TC	5,410	6,830	1,660	21,242
	300L4	**1022**	1.2	10,800	0.23	71 to 132	N56C to N280TC	5,470	6,910	1,700	21,242
	300L4	**1108**	1.1	7,500	0.15	71 to 132	N56C to N280TC	5,540	6,990	1,750	21,242
	300L4	**1275**	0.94	11,100	0.19	71 to 132	N56C to N280TC	5,650	7,130	1,800	21,242
	300L4	**1383**	0.87	7,610	0.12	71 to 132	N56C to N280TC	5,720	7,220	1,800	21,242
	300L4	**1591**	0.75	11,100	0.15	71 to 132	N56C to N280TC	5,830	7,360	1,800	21,242
	300L4	**1725**	0.70	7,610	0.09	71 to 132	N56C to N280TC	5,900	7,450	1,800	21,242
	300L4	**2153**	0.56	7,610	0.08	71 to 132	N56C to N280TC	6,090	7,640	1,800	21,242
	300L4	**2692**	0.45	8,850	0.07	71 to 132	N56C to N280TC	6,290	7,640	1,800	21,242

301 L

251

21,770 lb•in

n_1 rpm		i	n_2 rpm	T_{n2} lb•in	P_{n1} hp	P (IEC)	NEMA	Rn_2 [lbs] NHC/NPC	HZ/PZ	FZ	$T_{n2\ max}$ lb•in
1800	**301L1**	**3.48**	517	7,030	40	71 to 132	N56C to N280TC	1,360	1,620	220	30,093
	301L1	**4.26**	422	7,350	40	71 to 132	N56C to N280TC	1,450	1,720	240	30,093
	301L1	**5.77**	312	7,800	40	71 to 132	N56C to N280TC	1,590	1,880	270	30,093
	301L1	**7.20**	250	6,320	25.8	71 to 132	N56C to N280TC	1,690	2,010	290	30,093
	301L1	**9.00**	200	5,250	17.2	71 to 132	N56C to N280TC	1,810	2,150	310	30,093
	301L2	**12.1**	149	10,200	25.6	71 to 132	N56C to N280TC	1,980	2,350	340	30,093
	301L2	**14.8**	121	10,700	21.9	71 to 132	N56C to N280TC	2,110	2,500	360	30,093
	301L2	**18.2**	99	11,400	19.0	71 to 132	N56C to N280TC	2,240	2,660	390	30,093
	301L2	**20.1**	90	11,100	16.7	71 to 132	N56C to N280TC	2,310	2,740	400	30,093
	301L2	**24.6**	73	12,500	15.4	71 to 132	N56C to N280TC	2,450	2,910	430	30,093
	301L2	**30.7**	59	13,300	13.2	71 to 132	N56C to N280TC	2,620	3,110	460	30,093
	301L2	**33.3**	54	11,400	10.4	71 to 132	N56C to N280TC	2,680	3,180	480	30,093
	301L2	**38.4**	47	13,600	10.7	71 to 132	N56C to N280TC	2,800	3,320	500	30,093
	301L2	**41.5**	43	11,500	8.4	71 to 132	N56C to N280TC	2,870	3,400	510	30,093
	301L2	**51.9**	35	11,500	6.7	71 to 132	N56C to N280TC	3,070	3,640	550	30,093
	301L2	**64.8**	27.8	10,200	4.8	71 to 132	N56C to N280TC	3,280	3,890	590	30,093
	301L3	**51.6**	35	14,300	8.6	71 to 132	N56C to N280TC	3,060	3,630	550	30,093
	301L3	**63.2**	28.5	14,400	7.1	71 to 132	N56C to N280TC	3,250	3,860	590	30,093

301 L	251	21,770 lb•in

n_1 rpm		i	n_2 rpm	T_{n2} lb•in	P_{n1} hp	P (IEC)	NEMA	Rn_2 [lbs] NHC/NPC	HZ/PZ	FZ	$T_{n2\ max}$ lb•in
1800	**301L3**	**69.9**	25.8	11,500	5.2	71 to 132	N56C to N280TC	3,350	3,980	610	30,093
	301L3	**77.5**	23.2	14,600	5.9	71 to 132	N56C to N280TC	3,460	4,100	630	30,093
	301L3	**85.6**	21.0	14,700	5.4	71 to 132	N56C to N280TC	3,560	4,230	650	30,093
	301L3	**105**	17.2	14,900	4.4	71 to 132	N56C to N280TC	3,790	4,490	700	30,093
	301L3	**116**	15.5	11,500	3.1	71 to 132	N56C to N280TC	3,900	4,630	720	30,093
	301L3	**131**	13.8	15,000	3.6	71 to 132	N56C to N280TC	4,050	4,800	750	30,093
	301L3	**142**	12.7	15,100	3.3	71 to 132	N56C to N280TC	4,140	4,920	770	30,093
	301L3	**177**	10.2	15,300	2.7	71 to 132	N56C to N280TC	4,430	5,260	830	30,093
	301L3	**192**	9.4	11,500	1.9	71 to 132	N56C to N280TC	4,450	5,280	850	30,093
	301L3	**221**	8.1	15,600	2.2	71 to 132	N56C to N280TC	4,450	5,280	890	30,093
	301L3	**240**	7.5	11,500	1.5	71 to 132	N56C to N280TC	4,450	5,280	920	30,093
	301L3	**299**	6.0	11,500	1.2	71 to 132	N56C to N280TC	4,450	5,280	990	30,093
	301L3	**374**	4.8	11,600	0.97	71 to 132	N56C to N280TC	4,480	5,310	1,070	30,093
	301L4	**330**	5.4	16,500	1.6	71 to 132	N56C to N280TC	4,450	5,280	1,020	30,093
	301L4	**403**	4.5	11,700	0.94	71 to 132	N56C to N280TC	4,520	5,370	1,090	30,093
	301L4	**447**	4.0	17,400	1.3	71 to 132	N56C to N280TC	4,590	5,450	1,130	30,093
	301L4	**494**	3.6	17,700	1.2	71 to 132	N56C to N280TC	4,660	5,530	1,170	30,093
	301L4	**558**	3.2	18,100	1.0	71 to 132	N56C to N280TC	4,740	5,620	1,220	30,093
	301L4	**616**	2.9	18,400	0.96	71 to 132	N56C to N280TC	4,810	5,700	1,260	30,093
	301L4	**755**	2.4	19,100	0.82	71 to 132	N56C to N280TC	4,950	5,870	1,350	30,093
	301L4	**819**	2.2	19,300	0.76	71 to 132	N56C to N280TC	5,010	5,940	1,380	30,093
	301L4	**942**	1.9	19,700	0.68	71 to 132	N56C to N280TC	5,110	6,060	1,450	30,093
	301L4	**1022**	1.8	20,000	0.63	71 to 132	N56C to N280TC	5,170	6,130	1,490	30,093
	301L4	**1108**	1.6	14,000	0.41	71 to 132	N56C to N280TC	5,230	6,200	1,530	30,093
	301L4	**1275**	1.4	20,700	0.52	71 to 132	N56C to N280TC	5,330	6,330	1,600	30,093
	301L4	**1383**	1.3	14,500	0.34	71 to 132	N56C to N280TC	5,390	6,400	1,650	30,093
	301L4	**1591**	1.1	17,700	0.36	71 to 132	N56C to N280TC	5,500	6,530	1,730	30,093
	301L4	**1725**	1.0	15,100	0.28	71 to 132	N56C to N280TC	5,570	6,610	1,770	30,093
	301L4	**2153**	0.84	15,200	0.23	71 to 132	N56C to N280TC	5,750	6,820	1,800	30,093
	301L4	**2692**	0.67	15,200	0.18	71 to 132	N56C to N280TC	5,930	7,040	1,800	30,093
1200	**301L1**	**3.48**	345	7,940	40	71 to 132	N56C to N280TC	1,540	1,830	260	30,093
	301L1	**4.26**	281	8,310	38	71 to 132	N56C to N280TC	1,640	1,940	270	30,093
	301L1	**5.77**	208	8,810	30	71 to 132	N56C to N280TC	1,790	2,130	300	30,093
	301L1	**7.20**	167	7,140	19.5	71 to 132	N56C to N280TC	1,910	2,270	330	30,093
	301L1	**9.00**	133	5,930	12.9	71 to 132	N56C to N280TC	2,050	2,430	350	30,093
	301L2	**12.1**	99	11,500	19.2	71 to 132	N56C to N280TC	2,240	2,660	390	30,093
	301L2	**14.8**	81	12,100	16.5	71 to 132	N56C to N280TC	2,380	2,820	420	30,093
	301L2	**18.2**	66	12,900	14.3	71 to 132	N56C to N280TC	2,530	3,000	440	30,093
	301L2	**20.1**	60	11,400	11.5	71 to 132	N56C to N280TC	2,600	3,090	460	30,093
	301L2	**24.6**	49	14,000	11.5	71 to 132	N56C to N280TC	2,770	3,280	490	30,093
	301L2	**30.7**	39	14,200	9.3	71 to 132	N56C to N280TC	2,960	3,510	530	30,093
	301L2	**33.3**	36	11,500	7.0	71 to 132	N56C to N280TC	3,030	3,600	540	30,093
	301L2	**38.4**	31	13,600	7.2	71 to 132	N56C to N280TC	3,160	3,750	570	30,093
	301L2	**41.5**	28.9	11,500	5.6	71 to 132	N56C to N280TC	3,240	3,840	590	30,093
	301L2	**51.9**	23.1	11,500	4.5	71 to 132	N56C to N280TC	3,460	4,110	630	30,093
	301L2	**64.8**	18.5	10,200	3.2	71 to 132	N56C to N280TC	3,700	4,390	680	30,093
	301L3	**51.6**	23.2	14,600	5.9	71 to 132	N56C to N280TC	3,460	4,100	630	30,093
	301L3	**63.2**	19.0	14,800	4.9	71 to 132	N56C to N280TC	3,670	4,360	670	30,093
	301L3	**69.9**	17.2	11,500	3.4	71 to 132	N56C to N280TC	3,780	4,490	700	30,093
	301L3	**77.5**	15.5	14,900	4.0	71 to 132	N56C to N280TC	3,900	4,630	720	30,093
	301L3	**85.6**	14.0	15,000	3.7	71 to 132	N56C to N280TC	4,020	4,770	750	30,093
	301L3	**105**	11.4	15,200	3.0	71 to 132	N56C to N280TC	4,270	5,070	800	30,093
	301L3	**116**	10.4	11,500	2.1	71 to 132	N56C to N280TC	4,400	5,230	820	30,093
	301L3	**131**	9.2	15,500	2.5	71 to 132	N56C to N280TC	4,450	5,280	860	30,093
	301L3	**142**	8.5	15,600	2.3	71 to 132	N56C to N280TC	4,450	5,280	880	30,093
	301L3	**177**	6.8	16,100	1.9	71 to 132	N56C to N280TC	4,450	5,280	950	30,093
	301L3	**192**	6.2	11,500	1.2	71 to 132	N56C to N280TC	4,450	5,280	980	30,093
	301L3	**221**	5.4	16,100	1.5	71 to 132	N56C to N280TC	4,450	5,280	1,020	30,093
	301L3	**240**	5.0	11,500	1.0	71 to 132	N56C to N280TC	4,450	5,280	1,050	30,093
	301L3	**299**	4.0	11,900	0.83	71 to 132	N56C to N280TC	4,590	5,450	1,130	30,093
	301L3	**374**	3.2	12,400	0.69	71 to 132	N56C to N280TC	4,740	5,630	1,220	30,093

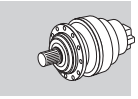

B

301 L — 251 — 21,770 lb•in

n_1 rpm		i	n_2 rpm	T_{n2} lb•in	P_{n1} hp	P (IEC)	NEMA	Rn_2 [lbs] NHC/NPC	HZ/PZ	FZ	$T_{n2\ max}$ lb•in
1200	**301L4**	**330**	3.6	17,700	1.2	71 to 132	N56C to N280TC	4,660	5,530	1,170	30,093
	301L4	**403**	3.0	12,500	0.67	71 to 132	N56C to N280TC	4,790	5,690	1,250	30,093
	301L4	**447**	2.7	18,700	0.90	71 to 132	N56C to N280TC	4,860	5,770	1,290	30,093
	301L4	**494**	2.4	19,000	0.83	71 to 132	N56C to N280TC	4,930	5,860	1,340	30,093
	301L4	**558**	2.2	19,400	0.75	71 to 132	N56C to N280TC	5,020	5,960	1,390	30,093
	301L4	**616**	1.9	19,700	0.69	71 to 132	N56C to N280TC	5,090	6,040	1,440	30,093
	301L4	**755**	1.6	20,300	0.58	71 to 132	N56C to N280TC	5,240	6,220	1,540	30,093
	301L4	**819**	1.5	20,500	0.54	71 to 132	N56C to N280TC	5,300	6,300	1,580	30,093
	301L4	**942**	1.3	21,000	0.48	71 to 132	N56C to N280TC	5,410	6,420	1,660	30,093
	301L4	**1022**	1.2	21,200	0.45	71 to 132	N56C to N280TC	5,470	6,500	1,700	30,093
	301L4	**1108**	1.1	15,000	0.29	71 to 132	N56C to N280TC	5,540	6,570	1,750	30,093
	301L4	**1275**	0.94	21,800	0.37	71 to 132	N56C to N280TC	5,650	6,710	1,800	30,093
	301L4	**1383**	0.87	15,200	0.24	71 to 132	N56C to N280TC	5,720	6,780	1,800	30,093
	301L4	**1591**	0.75	17,700	0.24	71 to 132	N56C to N280TC	5,830	6,920	1,800	30,093
	301L4	**1725**	0.70	15,200	0.19	71 to 132	N56C to N280TC	5,900	7,000	1,800	30,093
	301L4	**2153**	0.56	15,200	0.15	71 to 132	N56C to N280TC	6,090	7,230	1,800	30,093
	301L4	**2692**	0.45	15,200	0.12	71 to 132	N56C to N280TC	6,290	7,460	1,800	30,093

303 L — 267 — 26,290 lb•in

n_1 rpm		i	n_2 rpm	T_{n2} lb•in	P_{n1} hp	P (IEC)	NEMA	Rn_2 [lbs] NHC/NPC	HZ/PZ	FZ	$T_{n2\ max}$ lb•in
1800	**303L1**	**3.60**	500	11,600	54	132 to 200	N250TC to N280TC	2,640	3,340	680	46,024
	303L1	**4.25**	424	12,000	54	132 to 200	N250TC to N280TC	2,780	3,510	720	46,024
	303L1	**5.33**	338	12,500	54	132 to 200	N250TC to N280TC	2,970	3,750	770	46,024
	303L1	**6.20**	290	11,700	54	132 to 200	N250TC to N280TC	3,110	3,930	810	46,024
	303L1	**7.50**	240	10,200	40	132 to 200	N250TC to N280TC	3,290	4,160	870	46,024
	303L1	**9.67**	186	6,320	19.2	132 to 200	N250TC to N280TC	3,550	4,490	940	46,024
	303L2	**12.5**	144	13,700	26.8	71 to 160	N56C to N280TC	3,840	4,850	1,030	46,024
	303L2	**15.3**	117	14,300	26.8	71 to 160	N56C to N280TC	4,080	5,160	1,100	46,024
	303L2	**18.1**	99	16,900	26.8	71 to 160	N56C to N280TC	4,290	5,420	1,160	46,024
	303L2	**20.8**	87	15,200	22.3	71 to 160	N56C to N280TC	4,470	5,650	1,220	46,024
	303L2	**22.7**	79	18,300	24.4	71 to 160	N56C to N280TC	4,590	5,800	1,260	46,024
	303L2	**24.5**	73	18,000	22.2	71 to 160	N56C to N280TC	4,700	5,930	1,290	46,024
	303L2	**26.4**	68	16,100	18.5	71 to 160	N56C to N280TC	4,800	6,070	1,320	46,024
	303L2	**30.8**	59	18,700	18.5	71 to 160	N56C to N280TC	5,030	6,350	1,390	46,024
	303L2	**35.8**	50	16,100	13.7	71 to 160	N56C to N280TC	5,260	6,650	1,460	46,024
	303L2	**38.4**	47	19,000	15.0	71 to 160	N56C to N280TC	5,370	6,790	1,500	46,024
	303L2	**44.6**	40	16,100	11.0	71 to 160	N56C to N280TC	5,620	7,100	1,570	46,024
	303L2	**55.8**	32	16,100	8.8	71 to 160	N56C to N280TC	6,010	7,590	1,690	46,024
	303L3	**53.4**	34	19,000	11.1	71 to 160	N56C to N280TC	5,930	7,490	1,670	46,024
	303L3	**63.1**	28.5	21,900	10.9	71 to 160	N56C to N280TC	6,240	7,880	1,770	46,024
	303L3	**72.3**	24.9	19,500	8.5	71 to 160	N56C to N280TC	6,500	8,210	1,850	46,024
	303L3	**77.2**	23.3	22,000	8.9	71 to 160	N56C to N280TC	6,630	8,370	1,890	46,024
	303L3	**90.2**	20.0	19,700	6.8	71 to 160	N56C to N280TC	6,940	8,770	1,990	46,024
	303L3	**105**	17.2	22,500	6.7	71 to 160	N56C to N280TC	7,260	9,170	2,090	46,024
	303L3	**113**	16.0	16,100	4.5	71 to 160	N56C to N280TC	7,420	9,380	2,140	46,024
	303L3	**124**	14.5	16,100	4.0	71 to 160	N56C to N280TC	7,650	9,660	2,210	46,024
	303L3	**141**	12.7	22,700	5.0	71 to 160	N56C to N280TC	7,950	10,000	2,310	46,024
	303L3	**152**	11.8	16,100	3.3	71 to 160	N56C to N280TC	8,130	10,300	2,370	46,024
	303L3	**164**	11.0	19,400	3.7	71 to 160	N56C to N280TC	8,300	10,500	2,430	46,024
	303L3	**178**	10.1	19,500	3.4	71 to 160	N56C to N280TC	8,510	10,700	2,490	46,024
	303L3	**190**	9.5	16,100	2.7	71 to 160	N56C to N280TC	8,540	10,800	2,550	46,024
	303L3	**220**	8.2	19,900	2.8	71 to 160	N56C to N280TC	8,540	10,800	2,680	46,024
	303L3	**258**	7.0	16,200	2.0	71 to 160	N56C to N280TC	8,540	10,800	2,820	46,024
	303L3	**276**	6.5	19,600	2.2	71 to 160	N56C to N280TC	8,540	10,800	2,890	46,024
	303L3	**321**	5.6	16,300	1.6	71 to 160	N56C to N280TC	8,540	10,800	3,040	46,024
	303L3	**389**	4.6	14,700	1.2	71 to 160	N56C to N280TC	8,640	10,900	3,240	46,024

303 L	267	26,290 lb•in

n_1 rpm		i	n_2 rpm	T_{n2} lb•in	P_{n1} hp	P (IEC)	NEMA	Rn_2 [lbs] NHC/NPC	HZ/PZ	FZ	$T_{n2\ max}$ lb•in
1800	**303L3**	**402**	4.5	16,600	1.3	71 to 160	N56C to N280TC	8,680	11,000	3,270	46,024
	303L4	**413**	4.4	20,200	1.6	71 to 160	N56C to N280TC	8,710	11,000	3,300	46,024
	303L4	**446**	4.0	24,900	1.8	71 to 160	N56C to N280TC	8,810	11,100	3,390	46,024
	303L4	**492**	3.7	23,700	1.5	71 to 160	N56C to N280TC	8,930	11,300	3,500	46,024
	303L4	**556**	3.2	24,900	1.4	71 to 160	N56C to N280TC	9,090	11,500	3,650	46,024
	303L4	**649**	2.8	20,400	1.0	71 to 160	N56C to N280TC	9,290	11,700	3,840	46,024
	303L4	**718**	2.5	18,400	0.83	71 to 160	N56C to N280TC	9,430	11,900	3,970	46,024
	303L4	**816**	2.2	24,000	0.95	71 to 160	N56C to N280TC	9,600	12,100	4,140	46,024
	303L4	**896**	2.0	19,100	0.69	71 to 160	N56C to N280TC	9,730	12,300	4,280	46,024
	303L4	**1018**	1.8	24,100	0.76	71 to 160	N56C to N280TC	9,910	12,500	4,460	46,024
	303L4	**1098**	1.6	19,800	0.58	71 to 160	N56C to N280TC	10,000	12,700	4,580	46,024
	303L4	**1278**	1.4	24,100	0.61	71 to 160	N56C to N280TC	10,200	12,900	4,810	46,024
	303L4	**1370**	1.3	20,600	0.48	71 to 160	N56C to N280TC	10,300	13,100	4,930	46,024
	303L4	**1586**	1.1	19,900	0.40	71 to 160	N56C to N280TC	10,600	13,300	5,170	46,024
	303L4	**1854**	0.97	21,600	0.38	71 to 160	N56C to N280TC	10,800	13,600	5,400	46,024
	303L4	**1991**	0.90	25,200	0.41	71 to 160	N56C to N280TC	10,900	13,800	5,400	46,024
	303L4	**2243**	0.80	17,700	0.25	71 to 160	N56C to N280TC	11,100	14,000	5,400	46,024
	303L4	**2799**	0.64	17,700	0.20	71 to 160	N56C to N280TC	11,500	14,500	5,400	46,024
1200	**303L1**	**3.60**	333	13,100	54	132 to 200	N250TC to N280TC	2,980	3,770	780	46,024
	303L1	**4.25**	282	13,500	54	132 to 200	N250TC to N280TC	3,140	3,960	820	46,024
	303L1	**5.33**	225	14,100	52	132 to 200	N250TC to N280TC	3,360	4,240	890	46,024
	303L1	**6.20**	194	13,200	42	132 to 200	N250TC to N280TC	3,510	4,440	930	46,024
	303L1	**7.50**	160	11,500	30	132 to 200	N250TC to N280TC	3,720	4,700	990	46,024
	303L1	**9.67**	124	7,130	14.5	132 to 200	N250TC to N280TC	4,010	5,070	1,080	46,024
	303L2	**12.5**	96	15,500	25.1	71 to 160	N56C to N280TC	4,340	5,480	1,180	46,024
	303L2	**15.3**	78	16,200	21.4	71 to 160	N56C to N280TC	4,610	5,820	1,260	46,024
	303L2	**18.1**	66	19,100	21.4	71 to 160	N56C to N280TC	4,840	6,120	1,330	46,024
	303L2	**20.8**	58	17,200	16.8	71 to 160	N56C to N280TC	5,050	6,380	1,400	46,024
	303L2	**22.7**	53	18,900	16.8	71 to 160	N56C to N280TC	5,190	6,550	1,440	46,024
	303L2	**24.5**	49	20,200	16.7	71 to 160	N56C to N280TC	5,310	6,700	1,480	46,024
	303L2	**26.4**	45	16,100	12.3	71 to 160	N56C to N280TC	5,430	6,850	1,510	46,024
	303L2	**30.8**	39	19,000	12.5	71 to 160	N56C to N280TC	5,680	7,170	1,590	46,024
	303L2	**35.8**	34	16,100	9.1	71 to 160	N56C to N280TC	5,940	7,510	1,670	46,024
	303L2	**38.4**	31	19,100	10.1	71 to 160	N56C to N280TC	6,070	7,670	1,710	46,024
	303L2	**44.6**	26.9	16,100	7.3	71 to 160	N56C to N280TC	6,350	8,020	1,800	46,024
	303L2	**55.8**	21.5	16,100	5.8	71 to 160	N56C to N280TC	6,790	8,580	1,940	46,024
	303L3	**53.4**	22.5	19,500	7.6	71 to 160	N56C to N280TC	6,700	8,460	1,910	46,024
	303L3	**63.1**	19.0	22,500	7.4	71 to 160	N56C to N280TC	7,040	8,900	2,020	46,024
	303L3	**72.3**	16.6	19,900	5.8	71 to 160	N56C to N280TC	7,340	9,270	2,110	46,024
	303L3	**77.2**	15.5	22,700	6.1	71 to 160	N56C to N280TC	7,490	9,450	2,160	46,024
	303L3	**90.2**	13.3	20,200	4.7	71 to 160	N56C to N280TC	7,840	9,910	2,280	46,024
	303L3	**105**	11.5	23,200	4.6	71 to 160	N56C to N280TC	8,200	10,400	2,390	46,024
	303L3	**113**	10.6	16,100	3.0	71 to 160	N56C to N280TC	8,380	10,600	2,450	46,024
	303L3	**124**	9.6	16,100	2.7	71 to 160	N56C to N280TC	8,540	10,800	2,540	46,024
	303L3	**141**	8.5	23,300	3.4	71 to 160	N56C to N280TC	8,540	10,800	2,650	46,024
	303L3	**152**	7.9	16,200	2.2	71 to 160	N56C to N280TC	8,540	10,800	2,710	46,024
	303L3	**164**	7.3	19,600	2.5	71 to 160	N56C to N280TC	8,540	10,800	2,780	46,024
	303L3	**178**	6.8	19,600	2.3	71 to 160	N56C to N280TC	8,540	10,800	2,850	46,024
	303L3	**190**	6.3	16,200	1.8	71 to 160	N56C to N280TC	8,540	10,800	2,920	46,024
	303L3	**220**	5.4	19,900	1.9	71 to 160	N56C to N280TC	8,540	10,800	3,070	46,024
	303L3	**258**	4.7	16,500	1.3	71 to 160	N56C to N280TC	8,630	10,900	3,230	46,024
	303L3	**276**	4.3	20,100	1.5	71 to 160	N56C to N280TC	8,720	11,000	3,310	46,024
	303L3	**321**	3.7	17,100	1.1	71 to 160	N56C to N280TC	8,910	11,300	3,480	46,024
	303L3	**389**	3.1	15,200	0.82	71 to 160	N56C to N280TC	9,150	11,600	3,710	46,024
	303L3	**402**	3.0	17,800	0.93	71 to 160	N56C to N280TC	9,200	11,600	3,750	46,024
	303L4	**413**	2.9	21,700	1.1	71 to 160	N56C to N280TC	9,230	11,700	3,780	46,024
	303L4	**446**	2.7	24,900	1.2	71 to 160	N56C to N280TC	9,330	11,800	3,880	46,024
	303L4	**492**	2.4	23,900	1.0	71 to 160	N56C to N280TC	9,470	12,000	4,010	46,024
	303L4	**556**	2.2	25,100	0.97	71 to 160	N56C to N280TC	9,630	12,200	4,180	46,024
	303L4	**649**	1.8	20,700	0.69	71 to 160	N56C to N280TC	9,850	12,400	4,400	46,024

B

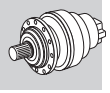

B

303 L — 267 — 26,290 lb•in

n_1 rpm		i	n_2 rpm	T_{n2} lb•in	P_{n1} hp	P (IEC)	NEMA	Rn_2 [lbs] NHC/NPC	HZ/PZ	FZ	$T_{n2\ max}$ lb•in
1200	**303L4**	**718**	1.7	19,700	0.59	71 to 160	N56C to N280TC	9,990	12,600	4,550	46,024
	303L4	**816**	1.5	24,300	0.64	71 to 160	N56C to N280TC	10,200	12,900	4,740	46,024
	303L4	**896**	1.3	20,500	0.49	71 to 160	N56C to N280TC	10,300	13,000	4,900	46,024
	303L4	**1018**	1.2	24,400	0.52	71 to 160	N56C to N280TC	10,500	13,300	5,110	46,024
	303L4	**1098**	1.1	21,300	0.42	71 to 160	N56C to N280TC	10,600	13,400	5,240	46,024
	303L4	**1278**	0.94	25,200	0.42	71 to 160	N56C to N280TC	10,800	13,700	5,400	46,024
	303L4	**1370**	0.88	21,600	0.34	71 to 160	N56C to N280TC	11,000	13,800	5,400	46,024
	303L4	**1586**	0.76	19,900	0.27	71 to 160	N56C to N280TC	11,200	14,100	5,400	46,024
	303L4	**1854**	0.65	21,600	0.25	71 to 160	N56C to N280TC	11,400	14,500	5,400	46,024
	303L4	**1991**	0.60	25,200	0.27	71 to 160	N56C to N280TC	11,600	14,600	5,400	46,024
	303L4	**2243**	0.53	17,700	0.17	71 to 160	N56C to N280TC	11,800	14,800	5,400	46,024
	303L4	**2799**	0.43	17,700	0.14	71 to 160	N56C to N280TC	12,100	15,300	5,400	46,024

304 L — 285 — 35,050 lb•in

n_1 rpm		i	n_2 rpm	T_{n2} lb•in	P_{n1} hp	P (IEC)	NEMA	Rn_2 [lbs] NHC/NPC	HZ/PZ	FZ	$T_{n2\ max}$ lb•in
1800	**304L1**	**3.60**	500	15,500	67	132 to 200	N250TC to N280TC	2,640	3,340	680	64,610
	304L1	**4.25**	424	16,000	67	132 to 200	N250TC to N280TC	2,780	3,510	720	64,610
	304L1	**5.33**	338	16,700	67	132 to 200	N250TC to N280TC	2,970	3,750	770	64,610
	304L1	**6.57**	274	15,600	67	132 to 200	N250TC to N280TC	3,160	4,000	830	64,610
	304L2	**12.5**	144	22,500	40	71 to 160	N56C to N280TC	3,840	4,850	1,030	64,610
	304L2	**15.3**	117	23,900	40	71 to 160	N56C to N280TC	4,080	5,160	1,100	64,610
	304L2	**18.1**	99	24,700	40	71 to 160	N56C to N280TC	4,290	5,420	1,160	64,610
	304L2	**20.8**	87	25,600	37	71 to 160	N56C to N280TC	4,470	5,650	1,220	64,610
	304L2	**22.7**	79	24,400	33	71 to 160	N56C to N280TC	4,590	5,800	1,260	64,610
	304L2	**24.5**	73	27,000	33	71 to 160	N56C to N280TC	4,700	5,930	1,290	64,610
	304L2	**30.8**	59	24,900	24.6	71 to 160	N56C to N280TC	5,030	6,350	1,390	64,610
	304L2	**38.4**	47	25,200	19.9	71 to 160	N56C to N280TC	5,370	6,790	1,500	64,610
	304L2	**47.3**	38	21,200	13.6	71 to 160	N56C to N280TC	5,720	7,230	1,600	64,610
	304L2	**59.1**	30	21,200	10.9	71 to 160	N56C to N280TC	6,120	7,730	1,730	64,610
	304L3	**43.6**	41	27,900	20.1	71 to 160	N56C to N280TC	5,580	7,050	1,560	64,610
	304L3	**53.4**	34	28,300	16.6	71 to 160	N56C to N280TC	5,930	7,490	1,670	64,610
	304L3	**63.1**	28.5	30,700	15.2	71 to 160	N56C to N280TC	6,240	7,880	1,770	64,610
	304L3	**72.3**	24.9	28,800	12.5	71 to 160	N56C to N280TC	6,500	8,210	1,850	64,610
	304L3	**77.2**	23.3	30,800	12.5	71 to 160	N56C to N280TC	6,630	8,370	1,890	64,610
	304L3	**90.2**	20.0	29,000	10.1	71 to 160	N56C to N280TC	6,940	8,770	1,990	64,610
	304L3	**105**	17.2	31,000	9.3	71 to 160	N56C to N280TC	7,260	9,170	2,090	64,610
	304L3	**111**	16.3	29,600	8.4	71 to 160	N56C to N280TC	7,380	9,320	2,130	64,610
	304L3	**130**	13.8	31,100	7.5	71 to 160	N56C to N280TC	7,760	9,800	2,250	64,610
	304L3	**141**	12.7	31,200	6.9	71 to 160	N56C to N280TC	7,950	10,000	2,310	64,610
	304L3	**150**	12.0	30,100	6.3	71 to 160	N56C to N280TC	8,080	10,200	2,350	64,610
	304L3	**165**	10.9	21,200	4.0	71 to 160	N56C to N280TC	8,320	10,500	2,430	64,610
	304L3	**178**	10.1	25,200	4.4	71 to 160	N56C to N280TC	8,510	10,700	2,490	64,610
	304L3	**202**	8.9	21,200	3.3	71 to 160	N56C to N280TC	8,540	10,800	2,600	64,610
	304L3	**220**	8.2	31,600	4.5	71 to 160	N56C to N280TC	8,540	10,800	2,680	64,610
	304L3	**273**	6.6	21,200	2.4	71 to 160	N56C to N280TC	8,540	10,800	2,880	64,610
	304L3	**341**	5.3	21,200	1.9	71 to 160	N56C to N280TC	8,540	10,800	3,100	64,610
	304L3	**426**	4.2	21,500	1.6	71 to 160	N56C to N280TC	8,750	11,100	3,340	64,610
	304L4	**413**	4.4	25,800	2.0	71 to 160	N56C to N280TC	8,710	11,000	3,300	64,610
	304L4	**446**	4.0	32,800	2.4	71 to 160	N56C to N280TC	8,810	11,100	3,390	64,610
	304L4	**492**	3.7	32,900	2.2	71 to 160	N56C to N280TC	8,930	11,300	3,500	64,610
	304L4	**556**	3.2	33,000	1.9	71 to 160	N56C to N280TC	9,090	11,500	3,650	64,610
	304L4	**649**	2.8	31,100	1.5	71 to 160	N56C to N280TC	9,290	11,700	3,840	64,610
	304L4	**702**	2.6	22,600	1.0	71 to 160	N56C to N280TC	9,400	11,900	3,940	64,610
	304L4	**816**	2.2	33,400	1.3	71 to 160	N56C to N280TC	9,600	12,100	4,140	64,610
	304L4	**1018**	1.8	33,900	1.1	71 to 160	N56C to N280TC	9,910	12,500	4,460	64,610
	304L4	**1164**	1.5	24,600	0.68	71 to 160	N56C to N280TC	10,100	12,800	4,670	64,610
	304L4	**1271**	1.4	34,300	0.87	71 to 160	N56C to N280TC	10,200	12,900	4,800	64,610

Bonfiglioli Riduttori

304 L	285	35,050 lb•in

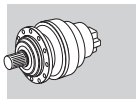

n_1 rpm		i	n_2 rpm	T_{n2} lb•in	P_{n1} hp	P (IEC)	NEMA	Rn_2 [lbs] NHC/NPC	HZ/PZ	FZ	$T_{n2\ max}$ lb•in
1800	**304L4**	**1344**	1.3	32,300	0.78	71 to 160	N56C to N280TC	10,300	13,000	4,890	64,610
	304L4	**1586**	1.1	34,700	0.71	71 to 160	N56C to N280TC	10,600	13,300	5,170	64,610
	304L4	**1815**	0.99	26,600	0.47	71 to 160	N56C to N280TC	10,800	13,600	5,400	64,610
	304L4	**1991**	0.90	33,100	0.54	71 to 160	N56C to N280TC	10,900	13,800	5,400	64,610
	304L4	**2269**	0.79	26,600	0.38	71 to 160	N56C to N280TC	11,100	14,000	5,400	64,610
	304L4	**2453**	0.73	26,600	0.35	71 to 160	N56C to N280TC	11,200	14,200	5,400	64,610
1200	**304L1**	**3.60**	333	17,500	67	132 to 200	N250TC to N280TC	2,980	3,770	780	64,610
	304L1	**4.25**	282	18,000	67	132 to 200	N250TC to N280TC	3,140	3,960	820	64,610
	304L1	**5.33**	225	18,800	67	132 to 200	N250TC to N280TC	3,360	4,240	890	64,610
	304L1	**6.57**	183	17,700	53	132 to 200	N250TC to N280TC	3,570	4,510	950	64,610
	304L2	**12.5**	96	25,200	40	71 to 160	N56C to N280TC	4,340	5,480	1,180	64,610
	304L2	**15.3**	78	25,900	34	71 to 160	N56C to N280TC	4,610	5,820	1,260	64,610
	304L2	**18.1**	66	27,900	31	71 to 160	N56C to N280TC	4,840	6,120	1,330	64,610
	304L2	**20.8**	58	27,100	26.4	71 to 160	N56C to N280TC	5,050	6,380	1,400	64,610
	304L2	**22.7**	53	25,100	22.4	71 to 160	N56C to N280TC	5,190	6,550	1,440	64,610
	304L2	**24.5**	49	30,400	25.1	71 to 160	N56C to N280TC	5,310	6,700	1,480	64,610
	304L2	**30.8**	39	25,200	16.6	71 to 160	N56C to N280TC	5,680	7,170	1,590	64,610
	304L2	**38.4**	31	25,200	13.3	71 to 160	N56C to N280TC	6,070	7,670	1,710	64,610
	304L2	**47.3**	25.4	21,200	9.0	71 to 160	N56C to N280TC	6,460	8,160	1,840	64,610
	304L2	**59.1**	20.3	21,200	7.2	71 to 160	N56C to N280TC	6,910	8,730	1,980	64,610
	304L3	**43.6**	27.5	28,600	13.7	71 to 160	N56C to N280TC	6,300	7,960	1,790	64,610
	304L3	**53.4**	22.5	29,000	11.3	71 to 160	N56C to N280TC	6,700	8,460	1,910	64,610
	304L3	**63.1**	19.0	30,900	10.2	71 to 160	N56C to N280TC	7,040	8,900	2,020	64,610
	304L3	**72.3**	16.6	29,500	8.5	71 to 160	N56C to N280TC	7,340	9,270	2,110	64,610
	304L3	**77.2**	15.5	31,100	8.4	71 to 160	N56C to N280TC	7,490	9,450	2,160	64,610
	304L3	**90.2**	13.3	29,900	6.9	71 to 160	N56C to N280TC	7,840	9,910	2,280	64,610
	304L3	**105**	11.5	31,200	6.2	71 to 160	N56C to N280TC	8,200	10,400	2,390	64,610
	304L3	**111**	10.9	30,300	5.7	71 to 160	N56C to N280TC	8,330	10,500	2,440	64,610
	304L3	**130**	9.2	31,500	5.0	71 to 160	N56C to N280TC	8,540	10,800	2,580	64,610
	304L3	**141**	8.5	31,600	4.7	71 to 160	N56C to N280TC	8,540	10,800	2,650	64,610
	304L3	**150**	8.0	30,600	4.3	71 to 160	N56C to N280TC	8,540	10,800	2,690	64,610
	304L3	**165**	7.3	21,200	2.7	71 to 160	N56C to N280TC	8,540	10,800	2,780	64,610
	304L3	**178**	6.8	25,200	3.0	71 to 160	N56C to N280TC	8,540	10,800	2,850	64,610
	304L3	**202**	5.9	21,200	2.2	71 to 160	N56C to N280TC	8,540	10,800	2,980	64,610
	304L3	**220**	5.4	32,300	3.1	71 to 160	N56C to N280TC	8,540	10,800	3,070	64,610
	304L3	**273**	4.4	21,400	1.6	71 to 160	N56C to N280TC	8,700	11,000	3,290	64,610
	304L3	**341**	3.5	21,900	1.3	71 to 160	N56C to N280TC	8,980	11,300	3,550	64,610
	304L3	**426**	2.8	22,400	1.1	71 to 160	N56C to N280TC	9,270	11,700	3,820	64,610
	304L4	**413**	2.9	27,600	1.4	71 to 160	N56C to N280TC	9,230	11,700	3,780	64,610
	304L4	**446**	2.7	33,100	1.6	71 to 160	N56C to N280TC	9,330	11,800	3,880	64,610
	304L4	**492**	2.4	33,200	1.5	71 to 160	N56C to N280TC	9,470	12,000	4,010	64,610
	304L4	**556**	2.2	33,500	1.3	71 to 160	N56C to N280TC	9,630	12,200	4,180	64,610
	304L4	**649**	1.8	31,700	1.0	71 to 160	N56C to N280TC	9,850	12,400	4,400	64,610
	304L4	**702**	1.7	24,200	0.74	71 to 160	N56C to N280TC	9,960	12,600	4,510	64,610
	304L4	**816**	1.5	34,300	0.90	71 to 160	N56C to N280TC	10,200	12,900	4,740	64,610
	304L4	**1018**	1.2	34,700	0.73	71 to 160	N56C to N280TC	10,500	13,300	5,110	64,610
	304L4	**1164**	1.0	26,400	0.49	71 to 160	N56C to N280TC	10,700	13,500	5,340	64,610
	304L4	**1271**	0.94	35,000	0.59	71 to 160	N56C to N280TC	10,800	13,700	5,400	64,610
	304L4	**1344**	0.89	32,800	0.53	71 to 160	N56C to N280TC	10,900	13,800	5,400	64,610
	304L4	**1586**	0.76	35,000	0.48	71 to 160	N56C to N280TC	11,200	14,100	5,400	64,610
	304L4	**1815**	0.66	26,600	0.31	71 to 160	N56C to N280TC	11,400	14,400	5,400	64,610
	304L4	**1991**	0.60	33,100	0.36	71 to 160	N56C to N280TC	11,600	14,600	5,400	64,610
	304L4	**2269**	0.53	26,600	0.25	71 to 160	N56C to N280TC	11,800	14,900	5,400	64,610
	304L4	**2453**	0.49	26,600	0.23	71 to 160	N56C to N280TC	11,900	15,000	5,400	64,610

B

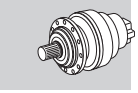

305 L

303

51,330 lb•in

n_1 rpm		i	n_2 rpm	T_{n2} lb•in	P_{n1} hp	P (IEC)	NEMA	Rn_2 [lbs] NHC/NPC	HZ/PZ	FZ	$T_{n2\ max}$ lb•in
1800	**305L1**	**3.60**	500	19,900	80	132 to 200	N250TC to N280TC	2,640	3,340	680	77,887
	305L1	**4.25**	424	20,500	80	132 to 200	N250TC to N280TC	2,780	3,510	720	77,887
	305L1	**5.33**	338	21,400	80	132 to 200	N250TC to N280TC	2,970	3,750	770	77,887
	305L1	**6.20**	290	22,200	80	132 to 200	N250TC to N280TC	3,110	3,930	810	77,887
	305L1	**7.50**	240	19,000	75	132 to 200	N250TC to N280TC	3,290	4,160	870	77,887
	305L2	**12.5**	144	24,500	40	71 to 160	N56C to N280TC	3,840	4,850	1,030	77,887
	305L2	**15.3**	117	25,600	40	71 to 160	N56C to N280TC	4,080	5,160	1,100	77,887
	305L2	**18.1**	99	30,300	40	71 to 160	N56C to N280TC	4,290	5,420	1,160	77,887
	305L2	**20.8**	87	27,300	40	71 to 160	N56C to N280TC	4,470	5,650	1,220	77,887
	305L2	**22.7**	79	33,100	40	71 to 160	N56C to N280TC	4,590	5,800	1,260	77,887
	305L2	**24.5**	73	32,100	40	71 to 160	N56C to N280TC	4,700	5,930	1,290	77,887
	305L2	**26.4**	68	31,100	36	71 to 160	N56C to N280TC	4,800	6,070	1,320	77,887
	305L2	**30.8**	59	36,200	36	71 to 160	N56C to N280TC	5,030	6,350	1,390	77,887
	305L2	**35.8**	50	31,400	26.7	71 to 160	N56C to N280TC	5,260	6,650	1,460	77,887
	305L2	**38.4**	47	37,900	30	71 to 160	N56C to N280TC	5,370	6,790	1,500	77,887
	305L2	**44.6**	40	31,500	21.4	71 to 160	N56C to N280TC	5,620	7,100	1,570	77,887
	305L2	**55.8**	32	31,200	17.0	71 to 160	N56C to N280TC	6,010	7,590	1,690	77,887
	305L3	**53.4**	34	34,700	20.3	71 to 160	N56C to N280TC	5,930	7,490	1,670	77,887
	305L3	**63.1**	28.5	40,700	20.2	71 to 160	N56C to N280TC	6,240	7,880	1,770	77,887
	305L3	**72.3**	24.9	36,200	15.7	71 to 160	N56C to N280TC	6,500	8,210	1,850	77,887
	305L3	**77.2**	23.3	41,600	16.8	71 to 160	N56C to N280TC	6,630	8,370	1,890	77,887
	305L3	**90.2**	20.0	37,000	12.8	71 to 160	N56C to N280TC	6,940	8,770	1,990	77,887
	305L3	**105**	17.2	43,400	13.0	71 to 160	N56C to N280TC	7,260	9,170	2,090	77,887
	305L3	**113**	16.0	31,700	8.8	71 to 160	N56C to N280TC	7,420	9,380	2,140	77,887
	305L3	**124**	14.5	31,800	8.0	71 to 160	N56C to N280TC	7,650	9,660	2,210	77,887
	305L3	**141**	12.7	44,600	9.9	71 to 160	N56C to N280TC	7,950	10,000	2,310	77,887
	305L3	**152**	11.8	31,800	6.5	71 to 160	N56C to N280TC	8,130	10,300	2,370	77,887
	305L3	**164**	11.0	38,900	7.4	71 to 160	N56C to N280TC	8,300	10,500	2,430	77,887
	305L3	**178**	10.1	38,900	6.9	71 to 160	N56C to N280TC	8,510	10,700	2,490	77,887
	305L3	**190**	9.5	31,900	5.2	71 to 160	N56C to N280TC	8,540	10,800	2,550	77,887
	305L3	**220**	8.2	42,000	6.0	71 to 160	N56C to N280TC	8,540	10,800	2,680	77,887
	305L3	**258**	7.0	31,900	3.9	71 to 160	N56C to N280TC	8,540	10,800	2,820	77,887
	305L3	**276**	6.5	39,300	4.5	71 to 160	N56C to N280TC	8,540	10,800	2,890	77,887
	305L3	**321**	5.6	31,900	3.1	71 to 160	N56C to N280TC	8,540	10,800	3,040	77,887
	305L3	**389**	4.6	27,600	2.2	71 to 160	N56C to N280TC	8,640	10,900	3,240	77,887
	305L3	**402**	4.5	32,400	2.5	71 to 160	N56C to N280TC	8,680	11,000	3,270	77,887
	305L4	**413**	4.4	40,500	3.2	71 to 160	N56C to N280TC	8,710	11,000	3,300	77,887
	305L4	**446**	4.0	48,600	3.5	71 to 160	N56C to N280TC	8,810	11,100	3,390	77,887
	305L4	**492**	3.7	47,100	3.1	71 to 160	N56C to N280TC	8,930	11,300	3,500	77,887
	305L4	**556**	3.2	48,600	2.8	71 to 160	N56C to N280TC	9,090	11,500	3,650	77,887
	305L4	**649**	2.8	39,700	2.0	71 to 160	N56C to N280TC	9,290	11,700	3,840	77,887
	305L4	**718**	2.5	35,400	1.6	71 to 160	N56C to N280TC	9,430	11,900	3,970	77,887
	305L4	**816**	2.2	47,600	1.9	71 to 160	N56C to N280TC	9,600	12,100	4,140	77,887
	305L4	**896**	2.0	36,800	1.3	71 to 160	N56C to N280TC	9,730	12,300	4,280	77,887
	305L4	**1018**	1.8	47,900	1.5	71 to 160	N56C to N280TC	9,910	12,500	4,460	77,887
	305L4	**1098**	1.6	38,100	1.1	71 to 160	N56C to N280TC	10,000	12,700	4,580	77,887
	305L4	**1278**	1.4	47,700	1.2	71 to 160	N56C to N280TC	10,200	12,900	4,810	77,887
	305L4	**1370**	1.3	39,600	0.93	71 to 160	N56C to N280TC	10,300	13,100	4,930	77,887
	305L4	**1586**	1.1	42,000	0.85	71 to 160	N56C to N280TC	10,600	13,300	5,170	77,887
	305L4	**1854**	0.97	41,500	0.72	71 to 160	N56C to N280TC	10,800	13,600	5,400	77,887
	305L4	**1991**	0.90	49,600	0.80	71 to 160	N56C to N280TC	10,900	13,800	5,400	77,887
	305L4	**2243**	0.80	33,600	0.48	71 to 160	N56C to N280TC	11,100	14,000	5,400	77,887
	305L4	**2799**	0.64	33,600	0.39	71 to 160	N56C to N280TC	11,500	14,500	5,400	77,887
1200	**305L1**	**3.60**	333	22,500	80	132 to 200	N250TC to N280TC	2,980	3,770	780	77,887
	305L1	**4.25**	282	23,200	80	132 to 200	N250TC to N280TC	3,140	3,960	820	77,887
	305L1	**5.33**	225	24,200	80	132 to 200	N250TC to N280TC	3,360	4,240	890	77,887
	305L1	**6.20**	194	25,100	80	132 to 200	N250TC to N280TC	3,510	4,440	930	77,887
	305L1	**7.50**	160	21,400	56	132 to 200	N250TC to N280TC	3,720	4,700	990	77,887
	305L2	**12.5**	96	27,700	40	71 to 160	N56C to N280TC	4,340	5,480	1,180	77,887
	305L2	**15.3**	78	29,000	38	71 to 160	N56C to N280TC	4,610	5,820	1,260	77,887

305 L

303

51,330 lb•in

n_1 rpm		i	n_2 rpm	T_{n2} lb•in	P_{n1} hp	P (IEC)	NEMA	Rn_2 [lbs] NHC/NPC	HZ/PZ	FZ	$T_{n2\ max}$ lb•in
1200	**305L2**	**18.1**	66	34,200	38	71 to 160	N56C to N280TC	4,840	6,120	1,330	77,887
	305L2	**20.8**	58	30,800	30	71 to 160	N56C to N280TC	5,050	6,380	1,400	77,887
	305L2	**22.7**	53	37,300	33	71 to 160	N56C to N280TC	5,190	6,550	1,440	77,887
	305L2	**24.5**	49	36,100	29.8	71 to 160	N56C to N280TC	5,310	6,700	1,480	77,887
	305L2	**26.4**	45	31,400	24.1	71 to 160	N56C to N280TC	5,430	6,850	1,510	77,887
	305L2	**30.8**	39	38,000	25.0	71 to 160	N56C to N280TC	5,680	7,170	1,590	77,887
	305L2	**35.8**	34	31,500	17.8	71 to 160	N56C to N280TC	5,940	7,510	1,670	77,887
	305L2	**38.4**	31	38,200	20.1	71 to 160	N56C to N280TC	6,070	7,670	1,710	77,887
	305L2	**44.6**	26.9	31,600	14.3	71 to 160	N56C to N280TC	6,350	8,020	1,800	77,887
	305L2	**55.8**	21.5	31,400	11.4	71 to 160	N56C to N280TC	6,790	8,580	1,940	77,887
	305L3	**53.4**	22.5	36,300	14.2	71 to 160	N56C to N280TC	6,700	8,460	1,910	77,887
	305L3	**63.1**	19.0	43,000	14.2	71 to 160	N56C to N280TC	7,040	8,900	2,020	77,887
	305L3	**72.3**	16.6	37,700	10.9	71 to 160	N56C to N280TC	7,340	9,270	2,110	77,887
	305L3	**77.2**	15.5	44,000	11.9	71 to 160	N56C to N280TC	7,490	9,450	2,160	77,887
	305L3	**90.2**	13.3	38,600	8.9	71 to 160	N56C to N280TC	7,840	9,910	2,280	77,887
	305L3	**105**	11.5	46,000	9.2	71 to 160	N56C to N280TC	8,200	10,400	2,390	77,887
	305L3	**113**	10.6	31,800	5.9	71 to 160	N56C to N280TC	8,380	10,600	2,450	77,887
	305L3	**124**	9.6	31,900	5.3	71 to 160	N56C to N280TC	8,540	10,800	2,540	77,887
	305L3	**141**	8.5	46,400	6.8	71 to 160	N56C to N280TC	8,540	10,800	2,650	77,887
	305L3	**152**	7.9	31,900	4.4	71 to 160	N56C to N280TC	8,540	10,800	2,710	77,887
	305L3	**164**	7.3	39,200	5.0	71 to 160	N56C to N280TC	8,540	10,800	2,780	77,887
	305L3	**178**	6.8	39,300	4.6	71 to 160	N56C to N280TC	8,540	10,800	2,850	77,887
	305L3	**190**	6.3	31,900	3.5	71 to 160	N56C to N280TC	8,540	10,800	2,920	77,887
	305L3	**220**	5.4	42,000	4.0	71 to 160	N56C to N280TC	8,540	10,800	3,070	77,887
	305L3	**258**	4.7	32,200	2.6	71 to 160	N56C to N280TC	8,630	10,900	3,230	77,887
	305L3	**276**	4.3	40,300	3.0	71 to 160	N56C to N280TC	8,720	11,000	3,310	77,887
	305L3	**321**	3.7	33,300	2.2	71 to 160	N56C to N280TC	8,910	11,300	3,480	77,887
	305L3	**389**	3.1	28,700	1.5	71 to 160	N56C to N280TC	9,150	11,600	3,710	77,887
	305L3	**402**	3.0	34,500	1.8	71 to 160	N56C to N280TC	9,200	11,600	3,750	77,887
	305L4	**413**	2.9	43,500	2.3	71 to 160	N56C to N280TC	9,230	11,700	3,780	77,887
	305L4	**446**	2.7	48,700	2.3	71 to 160	N56C to N280TC	9,330	11,800	3,880	77,887
	305L4	**492**	2.4	47,400	2.1	71 to 160	N56C to N280TC	9,470	12,000	4,010	77,887
	305L4	**556**	2.2	49,100	1.9	71 to 160	N56C to N280TC	9,630	12,200	4,180	77,887
	305L4	**649**	1.8	40,300	1.3	71 to 160	N56C to N280TC	9,850	12,400	4,400	77,887
	305L4	**718**	1.7	38,000	1.1	71 to 160	N56C to N280TC	9,990	12,600	4,550	77,887
	305L4	**816**	1.5	48,300	1.3	71 to 160	N56C to N280TC	10,200	12,900	4,740	77,887
	305L4	**896**	1.3	39,500	0.95	71 to 160	N56C to N280TC	10,300	13,000	4,900	77,887
	305L4	**1018**	1.2	48,700	1.0	71 to 160	N56C to N280TC	10,500	13,300	5,110	77,887
	305L4	**1098**	1.1	40,900	0.80	71 to 160	N56C to N280TC	10,600	13,400	5,240	77,887
	305L4	**1278**	0.94	49,600	0.83	71 to 160	N56C to N280TC	10,800	13,700	5,400	77,887
	305L4	**1370**	0.88	41,500	0.65	71 to 160	N56C to N280TC	11,000	13,800	5,400	77,887
	305L4	**1586**	0.76	42,000	0.57	71 to 160	N56C to N280TC	11,200	14,100	5,400	77,887
	305L4	**1854**	0.65	41,500	0.48	71 to 160	N56C to N280TC	11,400	14,500	5,400	77,887
	305L4	**1991**	0.60	49,600	0.54	71 to 160	N56C to N280TC	11,600	14,600	5,400	77,887
	305L4	**2243**	0.53	33,600	0.32	71 to 160	N56C to N280TC	11,800	14,800	5,400	77,887
	305L4	**2799**	0.43	33,600	0.26	71 to 160	N56C to N280TC	12,100	15,300	5,400	77,887

306 L

321

95,940 lb•in

n_1 rpm		i	n_2 rpm	T_{n2} lb•in	P_{n1} hp	P (IEC)	NEMA	Rn_2 [lbs] NHC/NPC	HZ/PZ	FZ	$T_{n2\ max}$ lb•in
1800	**306L1**	**3.60**	500	31,500	101	160 to 250	N320TC to N360TC	3,630	4,570	990	131,876
	306L1	**4.25**	424	32,600	101	160 to 250	N320TC to N360TC	3,810	4,810	1,050	131,876
	306L1	**5.33**	338	34,000	101	160 to 250	N320TC to N360TC	4,080	5,150	1,130	131,876
	306L1	**6.20**	290	35,200	101	160 to 250	N320TC to N360TC	4,270	5,380	1,190	131,876
	306L1	**7.50**	240	34,300	101	160 to 250	N320TC to N360TC	4,520	5,700	1,270	131,876
	306L2	**13.0**	139	40,400	54	132 to 200	N250TC to N280TC	5,330	6,720	1,520	131,876
	306L2	**15.3**	118	41,800	54	132 to 200	N250TC to N280TC	5,600	7,060	1,610	131,876
	306L2	**18.1**	100	49,400	54	132 to 200	N250TC to N280TC	5,890	7,420	1,700	131,876

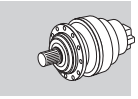

306 L

321

95,940 lb•in

n_1 rpm		i	n_2 rpm	T_{n2} lb•in	P_{n1} hp	P (IEC)	NEMA	Rn_2 [lbs] NHC/NPC	HZ/PZ	FZ	$T_{n2\ max}$ lb•in
1800	**306L2**	**22.7**	79	51,500	54	132 to 200	N250TC to N280TC	6,300	7,940	1,830	131,876
	306L2	**26.4**	68	53,400	54	132 to 200	N250TC to N280TC	6,590	8,310	1,920	131,876
	306L2	**28.4**	63	56,200	54	132 to 200	N250TC to N280TC	6,750	8,500	1,970	131,876
	306L2	**33.1**	54	58,800	54	132 to 200	N250TC to N280TC	7,060	8,900	2,080	131,876
	306L2	**38.4**	47	57,200	45	132 to 200	N250TC to N280TC	7,380	9,310	2,180	131,876
	306L2	**46.5**	39	57,200	37	132 to 200	N250TC to N280TC	7,820	9,860	2,330	131,876
	306L2	**56.3**	32	45,700	24.7	132 to 200	N250TC to N280TC	8,280	10,400	2,480	131,876
	306L2	**72.5**	24.8	46,300	19.4	132 to 200	N250TC to N280TC	8,930	11,300	2,700	131,876
	306L3	**53.2**	34	59,900	26.8	71 to 160	N56C to N280TC	8,140	10,300	2,430	131,876
	306L3	**65.2**	27.6	63,200	26.8	71 to 160	N56C to N280TC	8,650	10,900	2,600	131,876
	306L3	**77.0**	23.4	71,200	26.8	71 to 160	N56C to N280TC	9,100	11,500	2,750	131,876
	306L3	**81.9**	22.0	59,400	22.7	71 to 160	N56C to N280TC	9,260	11,700	2,810	131,876
	306L3	**88.3**	20.4	73,100	25.9	71 to 160	N56C to N280TC	9,480	11,900	2,880	131,876
	306L3	**104**	17.3	75,800	22.8	71 to 160	N56C to N280TC	9,960	12,600	3,040	131,876
	306L3	**112**	16.0	64,500	18.0	71 to 160	N56C to N280TC	10,200	12,800	3,120	131,876
	306L3	**121**	14.8	67,700	17.5	71 to 160	N56C to N280TC	10,400	13,100	3,200	131,876
	306L3	**141**	12.8	68,700	15.3	71 to 160	N56C to N280TC	10,900	13,700	3,370	131,876
	306L3	**152**	11.8	66,200	13.6	71 to 160	N56C to N280TC	11,200	14,100	3,450	131,876
	306L3	**190**	9.5	57,500	9.5	71 to 160	N56C to N280TC	11,700	14,800	3,720	131,876
	306L3	**205**	8.8	70,900	10.8	71 to 160	N56C to N280TC	11,700	14,800	3,810	131,876
	306L3	**222**	8.1	57,600	8.1	71 to 160	N56C to N280TC	11,700	14,800	3,920	131,876
	306L3	**238**	7.6	71,600	9.4	71 to 160	N56C to N280TC	11,700	14,800	4,010	131,876
	306L3	**268**	6.7	48,700	5.7	71 to 160	N56C to N280TC	11,700	14,800	4,170	131,876
	306L3	**288**	6.3	48,700	5.3	71 to 160	N56C to N280TC	11,700	14,800	4,270	131,876
	306L3	**325**	5.5	48,700	4.7	71 to 160	N56C to N280TC	11,700	14,800	4,440	131,876
	306L3	**405**	4.4	49,300	3.8	71 to 160	N56C to N280TC	11,900	15,000	4,790	131,876
	306L4	**391**	4.6	58,600	4.8	71 to 160	N56C to N280TC	11,900	15,000	4,730	131,876
	306L4	**444**	4.1	87,200	6.3	71 to 160	N56C to N280TC	12,100	15,200	4,940	131,876
	306L4	**509**	3.5	83,600	5.3	71 to 160	N56C to N280TC	12,300	15,500	5,170	131,876
	306L4	**589**	3.1	80,000	4.4	71 to 160	N56C to N280TC	12,600	15,900	5,420	131,876
	306L4	**636**	2.8	83,600	4.2	71 to 160	N56C to N280TC	12,700	16,000	5,560	131,876
	306L4	**700**	2.6	82,300	3.8	71 to 160	N56C to N280TC	12,900	16,300	5,740	131,876
	306L4	**809**	2.2	67,500	2.7	71 to 160	N56C to N280TC	13,200	16,600	6,030	131,876
	306L4	**877**	2.1	67,700	2.5	71 to 160	N56C to N280TC	13,300	16,800	6,190	131,876
	306L4	**1015**	1.8	83,400	2.7	71 to 160	N56C to N280TC	13,600	17,200	6,500	131,876
	306L4	**1095**	1.6	68,400	2.0	71 to 160	N56C to N280TC	13,800	17,300	6,670	131,876
	306L4	**1279**	1.4	72,000	1.8	71 to 160	N56C to N280TC	14,100	17,700	7,020	131,876
	306L4	**1475**	1.2	87,800	1.9	71 to 160	N56C to N280TC	14,400	18,100	7,360	131,876
	306L4	**1597**	1.1	74,800	1.5	71 to 160	N56C to N280TC	14,500	18,300	7,560	131,876
	306L4	**1843**	0.98	89,200	1.6	71 to 160	N56C to N280TC	14,800	18,700	7,870	131,876
	306L4	**2074**	0.87	62,000	0.96	71 to 160	N56C to N280TC	15,100	19,000	7,870	131,876
	306L4	**2337**	0.77	62,000	0.86	71 to 160	N56C to N280TC	15,300	19,300	7,870	131,876
	306L4	**2916**	0.62	62,000	0.69	71 to 160	N56C to N280TC	15,800	19,900	7,870	131,876
1200	**306L1**	**3.60**	333	35,600	101	160 to 250	N320TC to N360TC	4,100	5,170	1,130	131,876
	306L1	**4.25**	282	36,800	101	160 to 250	N320TC to N360TC	4,310	5,430	1,200	131,876
	306L1	**5.33**	225	38,400	101	160 to 250	N320TC to N360TC	4,610	5,810	1,290	131,876
	306L1	**6.20**	194	39,800	101	160 to 250	N320TC to N360TC	4,820	6,080	1,360	131,876
	306L1	**7.50**	160	38,700	101	160 to 250	N320TC to N360TC	5,110	6,440	1,450	131,876
	306L2	**13.0**	93	45,700	54	132 to 200	N250TC to N280TC	6,020	7,590	1,740	131,876
	306L2	**15.3**	78	47,200	54	132 to 200	N250TC to N280TC	6,330	7,970	1,840	131,876
	306L2	**18.1**	66	55,700	54	132 to 200	N250TC to N280TC	6,650	8,380	1,940	131,876
	306L2	**22.7**	53	58,100	52	132 to 200	N250TC to N280TC	7,120	8,970	2,100	131,876
	306L2	**26.4**	46	59,100	45	132 to 200	N250TC to N280TC	7,450	9,390	2,200	131,876
	306L2	**28.4**	42	61,300	44	132 to 200	N250TC to N280TC	7,620	9,600	2,260	131,876
	306L2	**33.1**	36	62,200	38	132 to 200	N250TC to N280TC	7,970	10,000	2,380	131,876
	306L2	**38.4**	31	57,300	30	132 to 200	N250TC to N280TC	8,340	10,500	2,500	131,876
	306L2	**46.5**	25.8	57,300	24.9	132 to 200	N250TC to N280TC	8,830	11,100	2,660	131,876
	306L2	**56.3**	21.3	46,700	16.8	132 to 200	N250TC to N280TC	9,350	11,800	2,840	131,876
	306L2	**72.5**	16.6	47,400	13.2	132 to 200	N250TC to N280TC	10,100	12,700	3,090	131,876
	306L3	**53.2**	22.5	66,600	26.1	71 to 160	N56C to N280TC	9,200	11,600	2,790	131,876

306 L

321

95,940 lb•in

n_1 rpm		i	n_2 rpm	T_{n2} lb•in	P_{n1} hp	P (IEC)	NEMA	Rn_2 [lbs] NHC/NPC	HZ/PZ	FZ	$T_{n2\ max}$ lb•in
1200	**306L3**	**65.2**	18.4	70,200	22.5	71 to 160	N56C to N280TC	9,770	12,300	2,980	131,876
	306L3	**77.0**	15.6	77,400	21.0	71 to 160	N56C to N280TC	10,300	12,900	3,150	131,876
	306L3	**81.9**	14.7	63,000	16.1	71 to 160	N56C to N280TC	10,500	13,200	3,210	131,876
	306L3	**88.3**	13.6	78,900	18.7	71 to 160	N56C to N280TC	10,700	13,500	3,300	131,876
	306L3	**104**	11.5	82,500	16.5	71 to 160	N56C to N280TC	11,200	14,200	3,480	131,876
	306L3	**112**	10.7	66,800	12.4	71 to 160	N56C to N280TC	11,500	14,500	3,570	131,876
	306L3	**121**	9.9	70,400	12.1	71 to 160	N56C to N280TC	11,700	14,800	3,660	131,876
	306L3	**141**	8.5	71,100	10.5	71 to 160	N56C to N280TC	11,700	14,800	3,850	131,876
	306L3	**152**	7.9	67,200	9.2	71 to 160	N56C to N280TC	11,700	14,800	3,950	131,876
	306L3	**190**	6.3	57,700	6.3	71 to 160	N56C to N280TC	11,700	14,800	4,250	131,876
	306L3	**205**	5.9	72,700	7.4	71 to 160	N56C to N280TC	11,700	14,800	4,360	131,876
	306L3	**222**	5.4	57,800	5.4	71 to 160	N56C to N280TC	11,700	14,800	4,480	131,876
	306L3	**238**	5.0	73,400	6.4	71 to 160	N56C to N280TC	11,700	14,800	4,590	131,876
	306L3	**268**	4.5	49,200	3.8	71 to 160	N56C to N280TC	11,900	15,000	4,780	131,876
	306L3	**288**	4.2	49,600	3.6	71 to 160	N56C to N280TC	12,000	15,200	4,890	131,876
	306L3	**325**	3.7	50,200	3.2	71 to 160	N56C to N280TC	12,300	15,400	5,090	131,876
	306L3	**405**	3.0	51,300	2.6	71 to 160	N56C to N280TC	12,600	15,900	5,480	131,876
	306L4	**391**	3.1	62,900	3.5	71 to 160	N56C to N280TC	12,600	15,900	5,410	131,876
	306L4	**444**	2.7	87,200	4.2	71 to 160	N56C to N280TC	12,800	16,200	5,650	131,876
	306L4	**509**	2.4	83,600	3.5	71 to 160	N56C to N280TC	13,100	16,500	5,910	131,876
	306L4	**589**	2.0	84,200	3.1	71 to 160	N56C to N280TC	13,300	16,800	6,210	131,876
	306L4	**636**	1.9	83,600	2.8	71 to 160	N56C to N280TC	13,500	17,000	6,370	131,876
	306L4	**700**	1.7	85,400	2.6	71 to 160	N56C to N280TC	13,700	17,200	6,570	131,876
	306L4	**809**	1.5	68,700	1.8	71 to 160	N56C to N280TC	14,000	17,600	6,900	131,876
	306L4	**877**	1.4	68,900	1.7	71 to 160	N56C to N280TC	14,100	17,800	7,090	131,876
	306L4	**1015**	1.2	84,100	1.8	71 to 160	N56C to N280TC	14,400	18,200	7,440	131,876
	306L4	**1095**	1.1	69,600	1.4	71 to 160	N56C to N280TC	14,600	18,400	7,630	131,876
	306L4	**1279**	0.94	76,400	1.3	71 to 160	N56C to N280TC	14,900	18,800	7,870	131,876
	306L4	**1475**	0.81	89,200	1.3	71 to 160	N56C to N280TC	15,200	19,200	7,870	131,876
	306L4	**1597**	0.75	76,400	1.0	71 to 160	N56C to N280TC	15,400	19,400	7,870	131,876
	306L4	**1843**	0.65	89,200	1.0	71 to 160	N56C to N280TC	15,700	19,800	7,870	131,876
	306L4	**2074**	0.58	62,000	0.64	71 to 160	N56C to N280TC	16,000	20,100	7,870	131,876
	306L4	**2337**	0.51	62,000	0.57	71 to 160	N56C to N280TC	16,200	20,500	7,870	131,876
	306L4	**2916**	0.41	62,000	0.46	71 to 160	N56C to N280TC	16,800	21,100	7,870	131,876

307 L

339

138,780 lb•in

n_1 rpm		i	n_2 rpm	T_{n2} lb•in	P_{n1} hp	P (IEC)	NEMA	Rn_2 [lbs] NHC/NPC	HZ/PZ	FZ	$T_{n2\ max}$ lb•in
1800	**307L1**	**3.43**	525	42,800	154	180 to 250	N320TC to N360TC	4,470	6,080	1,250	164,624
	307L1	**4.09**	440	44,100	154	180 to 250	N320TC to N360TC	4,720	6,410	1,330	185,866
	307L1	**5.25**	343	46,400	154	180 to 250	N320TC to N360TC	5,080	6,910	1,450	185,866
	307L1	**6.23**	289	48,200	154	180 to 250	N320TC to N360TC	5,350	7,280	1,530	185,866
	307L2	**12.3**	146	62,900	80	132 to 200	N250TC to N280TC	6,570	8,930	1,920	164,624
	307L2	**14.7**	122	64,800	80	132 to 200	N250TC to N280TC	6,930	9,420	2,040	185,866
	307L2	**17.4**	104	68,100	80	132 to 200	N250TC to N280TC	7,280	9,900	2,150	185,866
	307L2	**21.8**	83	72,800	80	132 to 200	N250TC to N280TC	7,790	10,600	2,320	185,866
	307L2	**25.4**	71	76,200	80	132 to 200	N250TC to N280TC	8,150	11,100	2,440	185,866
	307L2	**28.0**	64	76,700	80	132 to 200	N250TC to N280TC	8,400	11,400	2,530	185,866
	307L2	**30.7**	59	80,700	80	132 to 200	N250TC to N280TC	8,630	11,700	2,600	185,866
	307L2	**32.6**	55	80,200	75	132 to 200	N250TC to N280TC	8,790	12,000	2,660	185,866
	307L2	**38.6**	47	73,100	57	132 to 200	N250TC to N280TC	9,250	12,600	2,810	185,866
	307L2	**46.7**	39	73,600	48	132 to 200	N250TC to N280TC	9,800	13,300	3,000	185,866
	307L3	**51.3**	35	91,300	40	71 to 160	N56C to N280TC	10,100	13,700	3,090	185,866
	307L3	**60.5**	29.7	94,600	40	71 to 160	N56C to N280TC	10,600	14,400	3,260	185,866
	307L3	**74.1**	24.3	98,800	40	71 to 160	N56C to N280TC	11,200	15,300	3,490	185,866
	307L3	**80.6**	22.3	88,900	35	71 to 160	N56C to N280TC	11,500	15,700	3,590	185,866
	307L3	**93.0**	19.4	103,800	35	71 to 160	N56C to N280TC	12,000	16,400	3,770	185,866
	307L3	**100**	17.9	105,500	33	71 to 160	N56C to N280TC	12,300	16,800	3,860	185,866

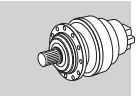

B

307 L	339	138,780 lb•in

n_1 rpm		i	n_2 rpm	T_{n2} lb•in	P_{n1} hp	P (IEC)	NEMA	Rn_2 [lbs] NHC/NPC	HZ/PZ	FZ	$T_{n2\ max}$ lb•in
1800	**307L3**	**113**	15.9	91,600	25.3	71 to 160	N56C to N280TC	12,800	17,400	4,020	185,866
	307L3	**126**	14.3	110,700	27.5	71 to 160	N56C to N280TC	13,200	17,900	4,170	185,866
	307L3	**139**	13.0	93,300	21.0	71 to 160	N56C to N280TC	13,600	18,500	4,310	185,866
	307L3	**146**	12.3	114,400	24.5	71 to 160	N56C to N280TC	13,800	18,800	4,380	185,866
	307L3	**162**	11.1	94,600	18.3	71 to 160	N56C to N280TC	14,200	19,300	4,530	185,866
	307L3	**177**	10.2	108,600	19.2	71 to 160	N56C to N280TC	14,600	19,900	4,670	185,866
	307L3	**202**	8.9	96,200	14.9	71 to 160	N56C to N280TC	14,700	20,000	4,880	185,866
	307L3	**221**	8.1	111,700	15.8	71 to 160	N56C to N280TC	14,700	20,000	5,030	185,866
	307L3	**239**	7.5	77,000	10.1	71 to 160	N56C to N280TC	14,700	20,000	5,160	185,866
	307L3	**284**	6.3	98,400	10.9	71 to 160	N56C to N280TC	14,700	20,000	5,460	185,866
	307L3	**336**	5.3	77,000	7.2	71 to 160	N56C to N280TC	14,700	20,000	5,780	185,866
	307L4	**349**	5.2	131,200	12.1	71 to 160	N56C to N280TC	14,700	20,000	5,860	185,866
	307L4	**406**	4.4	102,000	8.1	71 to 160	N56C to N280TC	14,900	20,300	6,160	185,866
	307L4	**465**	3.9	104,400	7.2	71 to 160	N56C to N280TC	15,200	20,700	6,440	185,866
	307L4	**509**	3.5	124,000	7.9	71 to 160	N56C to N280TC	15,400	21,000	6,640	185,866
	307L4	**579**	3.1	131,800	7.3	71 to 160	N56C to N280TC	15,700	21,400	6,930	185,866
	307L4	**654**	2.8	110,600	5.5	71 to 160	N56C to N280TC	16,000	21,700	7,220	185,866
	307L4	**722**	2.5	131,800	5.9	71 to 160	N56C to N280TC	16,200	22,100	7,460	185,866
	307L4	**801**	2.2	114,400	4.6	71 to 160	N56C to N280TC	16,500	22,400	7,720	185,866
	307L4	**906**	2.0	133,500	4.8	71 to 160	N56C to N280TC	16,700	22,800	8,050	185,866
	307L4	**999**	1.8	118,800	3.8	71 to 160	N56C to N280TC	17,000	23,100	8,310	185,866
	307L4	**1157**	1.6	121,800	3.4	71 to 160	N56C to N280TC	17,300	23,600	8,730	185,866
	307L4	**1274**	1.4	108,900	2.8	71 to 160	N56C to N280TC	17,600	23,900	9,020	185,866
	307L4	**1408**	1.3	136,900	3.1	71 to 160	N56C to N280TC	17,800	24,300	9,320	185,866
	307L4	**1591**	1.1	131,300	2.7	71 to 160	N56C to N280TC	18,200	24,700	9,710	185,866
	307L4	**1767**	1.0	138,600	2.5	71 to 160	N56C to N280TC	18,400	25,100	10,100	185,866
	307L4	**2041**	0.88	126,800	2.0	71 to 160	N56C to N280TC	18,800	25,600	10,100	185,866
	307L4	**2423**	0.74	97,400	1.3	71 to 160	N56C to N280TC	19,300	26,200	10,100	185,866
1200	**307L1**	**3.43**	350	48,400	154	180 to 250	N320TC to N360TC	5,050	6,870	1,440	164,624
	307L1	**4.09**	293	49,800	154	180 to 250	N320TC to N360TC	5,330	7,240	1,520	185,866
	307L1	**5.25**	229	52,400	154	180 to 250	N320TC to N360TC	5,740	7,810	1,650	185,866
	307L1	**6.23**	193	54,500	154	180 to 250	N320TC to N360TC	6,040	8,220	1,750	185,866
	307L2	**12.3**	97	70,600	80	132 to 200	N250TC to N280TC	7,420	10,100	2,200	164,624
	307L2	**14.7**	81	73,100	80	132 to 200	N250TC to N280TC	7,820	10,600	2,330	185,866
	307L2	**17.4**	69	76,800	80	132 to 200	N250TC to N280TC	8,220	11,200	2,470	185,866
	307L2	**21.8**	55	82,200	76	132 to 200	N250TC to N280TC	8,800	12,000	2,660	185,866
	307L2	**25.4**	47	85,600	68	132 to 200	N250TC to N280TC	9,210	12,500	2,800	185,866
	307L2	**28.0**	43	83,800	61	132 to 200	N250TC to N280TC	9,490	12,900	2,890	185,866
	307L2	**30.7**	39	87,900	58	132 to 200	N250TC to N280TC	9,750	13,300	2,980	185,866
	307L2	**32.6**	37	85,000	53	132 to 200	N250TC to N280TC	9,930	13,500	3,040	185,866
	307L2	**38.6**	31	74,100	39	132 to 200	N250TC to N280TC	10,400	14,200	3,220	185,866
	307L2	**46.7**	25.7	74,600	32	132 to 200	N250TC to N280TC	11,100	15,000	3,430	185,866
	307L3	**51.3**	23.4	99,600	40	71 to 160	N56C to N280TC	11,400	15,500	3,540	185,866
	307L3	**60.5**	19.8	103,200	36	71 to 160	N56C to N280TC	12,000	16,300	3,740	185,866
	307L3	**74.1**	16.2	107,800	30	71 to 160	N56C to N280TC	12,700	17,300	4,000	185,866
	307L3	**80.6**	14.9	92,100	23.9	71 to 160	N56C to N280TC	13,000	17,700	4,110	185,866
	307L3	**93.0**	12.9	113,200	25.4	71 to 160	N56C to N280TC	13,600	18,500	4,310	185,866
	307L3	**100**	12.0	115,100	23.9	71 to 160	N56C to N280TC	13,900	18,900	4,420	185,866
	307L3	**113**	10.6	95,000	17.5	71 to 160	N56C to N280TC	14,400	19,600	4,610	185,866
	307L3	**126**	9.5	120,400	19.9	71 to 160	N56C to N280TC	14,700	20,000	4,770	185,866
	307L3	**139**	8.6	96,400	14.5	71 to 160	N56C to N280TC	14,700	20,000	4,930	185,866
	307L3	**146**	8.2	120,800	17.2	71 to 160	N56C to N280TC	14,700	20,000	5,020	185,866
	307L3	**162**	7.4	97,400	12.6	71 to 160	N56C to N280TC	14,700	20,000	5,180	185,866
	307L3	**177**	6.8	108,900	12.8	71 to 160	N56C to N280TC	14,700	20,000	5,350	185,866
	307L3	**202**	6.0	98,900	10.2	71 to 160	N56C to N280TC	14,700	20,000	5,580	185,866
	307L3	**221**	5.4	113,700	10.7	71 to 160	N56C to N280TC	14,700	20,000	5,750	185,866
	307L3	**239**	5.0	77,000	6.7	71 to 160	N56C to N280TC	14,700	20,000	5,910	185,866
	307L3	**284**	4.2	102,900	7.6	71 to 160	N56C to N280TC	15,000	20,400	6,250	185,866
	307L3	**336**	3.6	80,800	5.0	71 to 160	N56C to N280TC	15,400	21,000	6,620	185,866
	307L4	**349**	3.4	131,800	8.1	71 to 160	N56C to N280TC	15,500	21,100	6,700	185,866
	307L4	**406**	3.0	109,300	5.8	71 to 160	N56C to N280TC	15,800	21,500	7,050	185,866

Bonfiglioli Riduttori

307 L

339

138,780 lb•in

n_1 rpm		i	n_2 rpm	T_{n2} lb•in	P_{n1} hp	P (IEC)	NEMA	Rn_2 [lbs] NHC/NPC	HZ/PZ	FZ	$T_{n2\ max}$ lb•in
1200	307L4	465	2.6	111,800	5.2	71 to 160	N56C to N280TC	16,100	21,900	7,370	185,866
	307L4	509	2.4	124,500	5.3	71 to 160	N56C to N280TC	16,300	22,200	7,600	185,866
	307L4	579	2.1	133,200	4.9	71 to 160	N56C to N280TC	16,600	22,600	7,930	185,866
	307L4	654	1.8	118,500	3.9	71 to 160	N56C to N280TC	16,900	23,000	8,260	185,866
	307L4	722	1.7	134,900	4.0	71 to 160	N56C to N280TC	17,200	23,400	8,540	185,866
	307L4	801	1.5	122,600	3.3	71 to 160	N56C to N280TC	17,400	23,700	8,840	185,866
	307L4	906	1.3	136,600	3.2	71 to 160	N56C to N280TC	17,700	24,100	9,210	185,866
	307L4	999	1.2	127,300	2.7	71 to 160	N56C to N280TC	18,000	24,500	9,520	185,866
	307L4	1157	1.0	130,500	2.4	71 to 160	N56C to N280TC	18,400	25,000	9,990	185,866
	307L4	1274	0.94	108,900	1.8	71 to 160	N56C to N280TC	18,600	25,300	10,100	185,866
	307L4	1408	0.85	138,800	2.1	71 to 160	N56C to N280TC	18,900	25,700	10,100	185,866
	307L4	1591	0.75	132,800	1.8	71 to 160	N56C to N280TC	19,200	26,200	10,100	185,866
	307L4	1767	0.68	138,800	1.7	71 to 160	N56C to N280TC	19,500	26,600	10,100	185,866
	307L4	2041	0.59	126,800	1.3	71 to 160	N56C to N280TC	19,900	27,100	10,100	185,866
	307L4	2423	0.50	97,400	0.86	71 to 160	N56C to N280TC	20,400	27,800	10,100	185,866

B

309 L

357

205,690 lb•in

n_1 rpm		i	n_2 rpm	T_{n2} lb•in	P_{n1} hp	P (IEC)	NEMA	Rn_2 [lbs] NHC/NPC	HZ/PZ	FZ	$T_{n2\ max}$ lb•in
1800	309L1	3.43	525	58,800	201	180 to 250	N320TC to N360TC	4,470	6,080	1,000	246,936
	309L1	4.09	440	60,500	201	180 to 250	N320TC to N360TC	4,720	6,410	1,060	256,672
	309L1	5.25	343	63,700	201	180 to 250	N320TC to N360TC	5,080	6,910	1,160	256,672
	309L1	6.23	289	66,200	201	180 to 250	N320TC to N360TC	5,350	7,280	1,220	256,672
	309L2	12.3	146	66,100	80	132 to 200	N250TC to N280TC	6,570	8,930	1,540	246,936
	309L2	14.7	122	78,800	80	132 to 200	N250TC to N280TC	6,930	9,420	1,630	256,672
	309L2	17.4	104	81,500	80	132 to 200	N250TC to N280TC	7,280	9,900	1,720	256,672
	309L2	21.8	83	85,000	80	132 to 200	N250TC to N280TC	7,790	10,600	1,860	256,672
	309L2	25.4	71	88,200	80	132 to 200	N250TC to N280TC	8,150	11,100	1,950	256,672
	309L2	28.0	64	105,200	80	132 to 200	N250TC to N280TC	8,400	11,400	2,020	256,672
	309L2	32.6	55	110,000	80	132 to 200	N250TC to N280TC	8,790	12,000	2,120	256,672
	309L2	38.6	47	109,700	80	132 to 200	N250TC to N280TC	9,250	12,600	2,250	256,672
	309L2	46.7	39	110,400	72	132 to 200	N250TC to N280TC	9,800	13,300	2,400	256,672
	309L3	51.3	35	113,100	40	71 to 160	N56C to N280TC	10,100	13,700	2,470	256,672
	309L3	60.5	29.7	118,500	40	71 to 160	N56C to N280TC	10,600	14,400	2,610	256,672
	309L3	74.1	24.3	126,000	40	71 to 160	N56C to N280TC	11,200	15,300	2,790	256,672
	309L3	80.6	22.3	127,500	40	71 to 160	N56C to N280TC	11,500	15,700	2,870	256,672
	309L3	93.0	19.4	127,200	40	71 to 160	N56C to N280TC	12,000	16,400	3,010	256,672
	309L3	100	17.9	138,000	40	71 to 160	N56C to N280TC	12,300	16,800	3,090	256,672
	309L3	113	15.9	134,000	37	71 to 160	N56C to N280TC	12,800	17,400	3,220	256,672
	309L3	126	14.3	137,900	34	71 to 160	N56C to N280TC	13,200	17,900	3,330	256,672
	309L3	139	13.0	138,000	31	71 to 160	N56C to N280TC	13,600	18,500	3,440	256,672
	309L3	162	11.10	141,100	27.3	71 to 160	N56C to N280TC	14,200	19,300	3,620	256,672
	309L3	183	9.9	126,600	21.7	71 to 160	N56C to N280TC	14,700	20,000	3,770	256,672
	309L3	202	8.9	144,400	22.4	71 to 160	N56C to N280TC	14,700	20,000	3,900	256,672
	309L3	223	8.1	115,100	16.2	71 to 160	N56C to N280TC	14,700	20,000	4,030	256,672
	309L3	239	7.5	115,100	15.0	71 to 160	N56C to N280TC	14,700	20,000	4,130	256,672
	309L3	284	6.3	137,400	15.2	71 to 160	N56C to N280TC	14,700	20,000	4,370	256,672
	309L3	336	5.3	115,100	10.7	71 to 160	N56C to N280TC	14,700	20,000	4,630	256,672
	309L4	349	5.2	187,000	17.3	71 to 160	N56C to N280TC	14,700	20,000	4,680	256,672
	309L4	406	4.4	153,000	12.2	71 to 160	N56C to N280TC	14,900	20,300	4,920	256,672
	309L4	465	3.9	156,600	10.9	71 to 160	N56C to N280TC	15,200	20,700	5,150	256,672
	309L4	509	3.5	126,600	8.0	71 to 160	N56C to N280TC	15,400	21,000	5,310	256,672
	309L4	579	3.1	188,200	10.5	71 to 160	N56C to N280TC	15,700	21,400	5,540	256,672
	309L4	654	2.8	158,700	7.8	71 to 160	N56C to N280TC	16,000	21,700	5,770	256,672
	309L4	722	2.5	188,200	8.4	71 to 160	N56C to N280TC	16,200	22,100	5,970	256,672
	309L4	801	2.2	160,400	6.5	71 to 160	N56C to N280TC	16,500	22,400	6,180	256,672
	309L4	906	2.0	157,100	5.6	71 to 160	N56C to N280TC	16,700	22,800	6,440	256,672
	309L4	999	1.8	160,800	5.2	71 to 160	N56C to N280TC	17,000	23,100	6,650	256,672
	309L4	1149	1.6	138,700	3.9	71 to 160	N56C to N280TC	17,300	23,600	6,970	256,672
	309L4	1286	1.4	141,600	3.6	71 to 160	N56C to N280TC	17,600	23,900	7,230	256,672

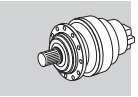

B

309 L

357

205,690 lb•in

n_1 rpm		i	n_2 rpm	T_{n2} lb•in	P_{n1} hp	P (IEC)	NEMA	Rn_2 [lbs] NHC/NPC	HZ/PZ	FZ	$T_{n2\ max}$ lb•in
1800	**309L4**	**1380**	1.3	143,400	3.4	71 to 160	N56C to N280TC	17,800	24,200	7,410	256,672
	309L4	**1605**	1.1	147,400	3.0	71 to 160	N56C to N280TC	18,200	24,700	7,790	256,672
	309L4	**1723**	1.0	149,300	2.8	71 to 160	N56C to N280TC	18,400	25,000	7,980	256,672
	309L4	**2003**	0.90	150,500	2.4	71 to 160	N56C to N280TC	18,800	25,500	8,090	256,672
	309L4	**2423**	0.74	150,500	2.0	71 to 160	N56C to N280TC	19,300	26,200	8,090	256,672
1200	**309L1**	**3.43**	350	66,400	201	180 to 250	N320TC to N360TC	5,050	6,870	1,150	246,936
	309L1	**4.09**	293	68,300	201	180 to 250	N320TC to N360TC	5,330	7,240	1,220	256,672
	309L1	**5.25**	229	71,900	201	180 to 250	N320TC to N360TC	5,740	7,810	1,320	256,672
	309L1	**6.23**	193	74,700	201	180 to 250	N320TC to N360TC	6,040	8,220	1,400	256,672
	309L2	**12.3**	97	74,600	80	132 to 200	N250TC to N280TC	7,420	10,100	1,760	246,936
	309L2	**14.7**	81	89,000	80	132 to 200	N250TC to N280TC	7,820	10,600	1,870	256,672
	309L2	**17.4**	69	92,100	80	132 to 200	N250TC to N280TC	8,220	11,200	1,970	256,672
	309L2	**21.8**	55	96,000	80	132 to 200	N250TC to N280TC	8,800	12,000	2,130	256,672
	309L2	**25.4**	47	98,800	79	132 to 200	N250TC to N280TC	9,210	12,500	2,240	256,672
	309L2	**28.0**	43	115,900	80	132 to 200	N250TC to N280TC	9,490	12,900	2,310	256,672
	309L2	**32.6**	37	118,500	74	132 to 200	N250TC to N280TC	9,930	13,500	2,430	256,672
	309L2	**38.6**	31	111,100	58	132 to 200	N250TC to N280TC	10,400	14,200	2,570	256,672
	309L2	**46.7**	25.7	111,800	48	132 to 200	N250TC to N280TC	11,100	15,000	2,740	256,672
	309L3	**51.3**	23.4	125,700	40	71 to 160	N56C to N280TC	11,400	15,500	2,830	256,672
	309L3	**60.5**	19.8	133,900	40	71 to 160	N56C to N280TC	12,000	16,300	2,990	256,672
	309L3	**74.1**	16.2	142,300	40	71 to 160	N56C to N280TC	12,700	17,300	3,200	256,672
	309L3	**80.6**	14.9	135,200	35	71 to 160	N56C to N280TC	13,000	17,700	3,290	256,672
	309L3	**93.0**	12.9	141,700	32	71 to 160	N56C to N280TC	13,600	18,500	3,450	256,672
	309L3	**100**	12.0	155,800	32	71 to 160	N56C to N280TC	13,900	18,900	3,540	256,672
	309L3	**113**	10.6	142,100	26.2	71 to 160	N56C to N280TC	14,400	19,600	3,680	256,672
	309L3	**126**	9.5	151,900	25.2	71 to 160	N56C to N280TC	14,700	20,000	3,820	256,672
	309L3	**139**	8.6	144,700	21.7	71 to 160	N56C to N280TC	14,700	20,000	3,940	256,672
	309L3	**162**	7.4	146,100	18.9	71 to 160	N56C to N280TC	14,700	20,000	4,150	256,672
	309L3	**183**	6.6	126,600	14.5	71 to 160	N56C to N280TC	14,700	20,000	4,320	256,672
	309L3	**202**	6.0	148,200	15.3	71 to 160	N56C to N280TC	14,700	20,000	4,470	256,672
	309L3	**223**	5.4	115,100	10.8	71 to 160	N56C to N280TC	14,700	20,000	4,620	256,672
	309L3	**239**	5.0	115,100	10.0	71 to 160	N56C to N280TC	14,700	20,000	4,730	256,672
	309L3	**284**	4.2	139,800	10.3	71 to 160	N56C to N280TC	15,000	20,400	5,000	256,672
	309L3	**336**	3.6	120,900	7.5	71 to 160	N56C to N280TC	15,400	21,000	5,300	256,672
	309L4	**349**	3.4	188,200	11.6	71 to 160	N56C to N280TC	15,500	21,100	5,360	256,672
	309L4	**406**	3.0	163,900	8.7	71 to 160	N56C to N280TC	15,800	21,500	5,640	256,672
	309L4	**465**	2.6	167,800	7.8	71 to 160	N56C to N280TC	16,100	21,900	5,900	256,672
	309L4	**509**	2.4	126,800	5.4	71 to 160	N56C to N280TC	16,300	22,200	6,080	256,672
	309L4	**579**	2.1	188,800	7.0	71 to 160	N56C to N280TC	16,600	22,600	6,350	256,672
	309L4	**654**	1.8	160,800	5.3	71 to 160	N56C to N280TC	16,900	23,000	6,610	256,672
	309L4	**722**	1.7	189,600	5.6	71 to 160	N56C to N280TC	17,200	23,400	6,830	256,672
	309L4	**801**	1.5	161,200	4.3	71 to 160	N56C to N280TC	17,400	23,700	7,070	256,672
	309L4	**906**	1.3	161,000	3.8	71 to 160	N56C to N280TC	17,700	24,100	7,370	256,672
	309L4	**999**	1.2	161,600	3.5	71 to 160	N56C to N280TC	18,000	24,500	7,610	256,672
	309L4	**1149**	1.0	149,300	2.8	71 to 160	N56C to N280TC	18,400	25,000	7,980	256,672
	309L4	**1286**	0.93	150,500	2.5	71 to 160	N56C to N280TC	18,700	25,400	8,090	256,672
	309L4	**1380**	0.87	150,500	2.3	71 to 160	N56C to N280TC	18,800	25,600	8,090	256,672
	309L4	**1605**	0.75	150,500	2.0	71 to 160	N56C to N280TC	19,300	26,200	8,090	256,672
	309L4	**1723**	0.70	150,500	1.9	71 to 160	N56C to N280TC	19,500	26,500	8,090	256,672
	309L4	**2003**	0.60	150,500	1.6	71 to 160	N56C to N280TC	19,900	27,000	8,090	256,672
	309L4	**2423**	0.50	150,500	1.3	71 to 160	N56C to N280TC	20,400	27,800	8,090	256,672

310M L

373

297,740 lb•in

n_1 rpm		i	n_2 rpm	T_{n2} lb•in	P_{n1} hp	P (IEC)	NEMA	Rn_2 [lbs] NHC/NPC	HZ/PZ	FZ	$T_{n2\ max}$ lb•in
1800	**310ML1**	**4.09**	440	97,700	235	200 to 250	N320TC to N360TC	5,530	7,140	1,920	421,296
	310ML1	**5.25**	343	102,900	235	200 to 250	N320TC to N360TC	5,960	7,700	2,090	421,296
	310ML1	**6.23**	289	107,000	235	200 to 250	N320TC to N360TC	6,280	8,110	2,210	421,296

Bonfiglioli Riduttori

310M L	373	297,740 lb•in

n_1 rpm		i	n_2 rpm	T_{n2} lb•in	P_{n1} hp	P (IEC)	NEMA	Rn_2 [lbs] NHC/NPC	HZ/PZ	FZ	$T_{n2\ max}$ lb•in
1800	**310ML2**	**14.7**	122	125,000	101	160 to 250	N320TC to N360TC	8,130	10,500	2,940	421,296
	310ML2	**17.4**	104	129,400	101	160 to 250	N320TC to N360TC	8,540	11,000	3,110	421,296
	310ML2	**21.8**	83	134,800	101	160 to 250	N320TC to N360TC	9,140	11,800	3,360	421,296
	310ML2	**25.4**	71	139,800	101	160 to 250	N320TC to N360TC	9,570	12,400	3,530	421,296
	310ML2	**28.0**	64	170,000	101	160 to 250	N320TC to N360TC	9,850	12,700	3,650	421,296
	310ML2	**30.7**	59	144,400	101	160 to 250	N320TC to N360TC	10,100	13,100	3,760	421,296
	310ML2	**32.6**	55	177,800	101	160 to 250	N320TC to N360TC	10,300	13,300	3,840	421,296
	310ML2	**38.6**	47	157,600	101	160 to 250	N320TC to N360TC	10,900	14,000	4,060	421,296
	310ML2	**46.7**	39	157,600	101	160 to 250	N320TC to N360TC	11,500	14,800	4,330	421,296
	310ML3	**53.0**	34	160,400	54	132 to 200	N250TC to N280TC	11,900	15,400	4,510	421,296
	310ML3	**62.6**	28.8	166,000	54	132 to 200	N250TC to N280TC	12,500	16,200	4,770	421,296
	310ML3	**73.9**	24.4	188,500	54	132 to 200	N250TC to N280TC	13,200	17,000	5,040	421,296
	310ML3	**80.3**	22.4	179,100	54	132 to 200	N250TC to N280TC	13,500	17,500	5,180	421,296
	310ML3	**92.7**	19.4	196,000	54	132 to 200	N250TC to N280TC	14,100	18,200	5,440	421,296
	310ML3	**101**	17.9	180,800	54	132 to 200	N250TC to N280TC	14,500	18,700	5,590	421,296
	310ML3	**108**	16.7	204,400	54	132 to 200	N250TC to N280TC	14,800	19,100	5,720	421,296
	310ML3	**119**	15.1	189,500	50	132 to 200	N250TC to N280TC	15,200	19,600	5,910	421,296
	310ML3	**135**	13.3	218,300	51	132 to 200	N250TC to N280TC	15,800	20,400	6,170	421,296
	310ML3	**149**	12.1	190,700	40	132 to 200	N250TC to N280TC	16,300	21,000	6,370	421,296
	310ML3	**164**	11.0	228,900	44	132 to 200	N250TC to N280TC	16,700	21,600	6,570	421,296
	310ML3	**177**	10.2	157,600	27.8	132 to 200	N250TC to N280TC	17,100	22,100	6,750	421,296
	310ML3	**202**	8.9	193,200	30	132 to 200	N250TC to N280TC	17,200	22,200	7,050	421,296
	310ML3	**230**	7.8	171,100	23.3	132 to 200	N250TC to N280TC	17,200	22,200	7,360	421,296
	310ML3	**249**	7.2	158,400	19.9	132 to 200	N250TC to N280TC	17,200	22,200	7,560	421,296
	310ML3	**295**	6.1	198,200	21.0	132 to 200	N250TC to N280TC	17,200	22,200	8,000	421,296
	310ML3	**350**	5.1	159,200	14.2	132 to 200	N250TC to N280TC	17,200	22,200	8,470	421,296
	310ML4	**392**	4.6	161,700	13.3	71 to 160	N56C to N280TC	17,400	22,500	8,790	421,296
	310ML4	**453**	4.0	256,200	18.2	71 to 160	N56C to N280TC	17,800	23,000	9,230	421,296
	310ML4	**507**	3.5	213,400	13.6	71 to 160	N56C to N280TC	18,100	23,400	9,580	421,296
	310ML4	**590**	3.1	219,100	12.0	71 to 160	N56C to N280TC	18,500	23,900	10,100	421,296
	310ML4	**637**	2.8	222,100	11.3	71 to 160	N56C to N280TC	18,700	24,100	10,300	421,296
	310ML4	**726**	2.5	227,300	10.1	71 to 160	N56C to N280TC	19,000	24,600	10,800	421,296
	310ML4	**798**	2.3	231,100	9.3	71 to 160	N56C to N280TC	19,300	24,900	11,100	421,296
	310ML4	**974**	1.8	278,400	9.2	71 to 160	N56C to N280TC	19,900	25,600	11,900	421,296
	310ML4	**1002**	1.8	240,500	7.7	71 to 160	N56C to N280TC	19,900	25,700	12,000	421,296
	310ML4	**1164**	1.5	246,900	6.8	71 to 160	N56C to N280TC	20,400	26,300	12,600	421,296
	310ML4	**1259**	1.4	219,700	5.6	71 to 160	N56C to N280TC	20,600	26,600	13,000	421,296
	310ML4	**1438**	1.3	203,500	4.6	71 to 160	N56C to N280TC	21,000	27,100	13,600	421,296
	310ML4	**1672**	1.1	209,000	4.0	71 to 160	N56C to N280TC	21,400	27,700	14,300	421,296
	310ML4	**1794**	1.0	211,700	3.8	71 to 160	N56C to N280TC	21,700	28,000	14,600	421,296
	310ML4	**2022**	0.89	211,800	3.4	71 to 160	N56C to N280TC	22,000	28,400	14,600	421,296
	310ML4	**2523**	0.71	211,800	2.7	71 to 160	N56C to N280TC	22,700	29,400	14,600	421,296
1200	**310ML1**	**4.09**	293	110,400	235	200 to 250	N320TC to N360TC	6,250	8,070	2,200	421,296
	310ML1	**5.25**	229	116,200	235	200 to 250	N320TC to N360TC	6,730	8,700	2,390	421,296
	310ML1	**6.23**	193	120,800	235	200 to 250	N320TC to N360TC	7,090	9,150	2,530	421,296
	310ML2	**14.7**	81	141,200	101	160 to 250	N320TC to N360TC	9,180	11,800	3,370	421,296
	310ML2	**17.4**	69	146,100	101	160 to 250	N320TC to N360TC	9,650	12,500	3,560	421,296
	310ML2	**21.8**	55	152,200	101	160 to 250	N320TC to N360TC	10,300	13,300	3,840	421,296
	310ML2	**25.4**	47	157,100	101	160 to 250	N320TC to N360TC	10,800	13,900	4,040	421,296
	310ML2	**28.0**	43	184,100	101	160 to 250	N320TC to N360TC	11,100	14,400	4,180	421,296
	310ML2	**30.7**	39	154,400	101	160 to 250	N320TC to N360TC	11,400	14,800	4,300	421,296
	310ML2	**32.6**	37	184,900	101	160 to 250	N320TC to N360TC	11,600	15,000	4,390	421,296
	310ML2	**38.6**	31	157,600	83	160 to 250	N320TC to N360TC	12,300	15,800	4,650	421,296
	310ML2	**46.7**	25.7	157,600	68	160 to 250	N320TC to N360TC	13,000	16,800	4,950	421,296
	310ML3	**53.0**	22.6	181,200	54	132 to 200	N250TC to N280TC	13,500	17,400	5,170	421,296
	310ML3	**62.6**	19.2	187,500	54	132 to 200	N250TC to N280TC	14,200	18,300	5,460	421,296
	310ML3	**73.9**	16.2	208,200	54	132 to 200	N250TC to N280TC	14,900	19,200	5,770	421,296
	310ML3	**80.3**	14.9	185,300	48	132 to 200	N250TC to N280TC	15,300	19,700	5,930	421,296
	310ML3	**92.7**	12.9	217,500	49	132 to 200	N250TC to N280TC	15,900	20,600	6,220	421,296
	310ML3	**101**	11.9	188,400	39	132 to 200	N250TC to N280TC	16,300	21,100	6,400	421,296
	310ML3	**108**	11.1	227,900	44	132 to 200	N250TC to N280TC	16,700	21,500	6,540	421,296
	310ML3	**119**	10.1	191,700	34	132 to 200	N250TC to N280TC	17,200	22,200	6,760	421,296

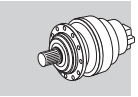

B

310M L

373

297,740 lb•in

n_1 rpm		i	n_2 rpm	T_{n2} lb•in	P_{n1} hp	P (IEC)	NEMA	Rn_2 [lbs] NHC/NPC	HZ/PZ	FZ	$T_{n2\ max}$ lb•in
1200	**310ML3**	**135**	8.9	238,700	37	132 to 200	N250TC to N280TC	17,200	22,200	7,060	421,296
	310ML3	**149**	8.0	194,600	27.2	132 to 200	N250TC to N280TC	17,200	22,200	7,300	421,296
	310ML3	**164**	7.3	237,100	30	132 to 200	N250TC to N280TC	17,200	22,200	7,520	421,296
	310ML3	**177**	6.8	158,600	18.7	132 to 200	N250TC to N280TC	17,200	22,200	7,720	421,296
	310ML3	**202**	5.9	198,600	20.5	132 to 200	N250TC to N280TC	17,200	22,200	8,070	421,296
	310ML3	**230**	5.2	171,100	15.5	132 to 200	N250TC to N280TC	17,200	22,200	8,430	421,296
	310ML3	**249**	4.8	160,400	13.4	132 to 200	N250TC to N280TC	17,300	22,400	8,650	421,296
	310ML3	**295**	4.1	206,400	14.6	132 to 200	N250TC to N280TC	17,700	22,900	9,160	421,296
	310ML3	**350**	3.4	170,400	10.1	132 to 200	N250TC to N280TC	18,200	23,500	9,700	421,296
	310ML4	**392**	3.1	173,700	9.5	71 to 160	N56C to N280TC	18,500	23,800	10,100	421,296
	310ML4	**453**	2.6	256,200	12.2	71 to 160	N56C to N280TC	18,900	24,300	10,600	421,296
	310ML4	**507**	2.4	229,100	9.7	71 to 160	N56C to N280TC	19,200	24,700	11,000	421,296
	310ML4	**590**	2.0	235,300	8.6	71 to 160	N56C to N280TC	19,600	25,300	11,500	421,296
	310ML4	**637**	1.9	238,500	8.1	71 to 160	N56C to N280TC	19,800	25,600	11,800	421,296
	310ML4	**726**	1.7	244,000	7.2	71 to 160	N56C to N280TC	20,200	26,000	12,400	421,296
	310ML4	**798**	1.5	248,100	6.7	71 to 160	N56C to N280TC	20,400	26,400	12,800	421,296
	310ML4	**974**	1.2	288,300	6.4	71 to 160	N56C to N280TC	21,000	27,200	13,600	421,296
	310ML4	**1002**	1.2	258,200	5.5	71 to 160	N56C to N280TC	21,100	27,300	13,800	421,296
	310ML4	**1164**	1.0	265,100	4.9	71 to 160	N56C to N280TC	21,600	27,900	14,500	421,296
	310ML4	**1259**	0.95	219,700	3.8	71 to 160	N56C to N280TC	21,800	28,200	14,600	421,296
	310ML4	**1438**	0.83	211,800	3.2	71 to 160	N56C to N280TC	22,200	28,700	14,600	421,296
	310ML4	**1672**	0.72	211,800	2.7	71 to 160	N56C to N280TC	22,700	29,300	14,600	421,296
	310ML4	**1794**	0.67	211,800	2.5	71 to 160	N56C to N280TC	23,000	29,600	14,600	421,296
	310ML4	**2022**	0.59	211,800	2.3	71 to 160	N56C to N280TC	23,300	30,100	14,600	421,296
	310ML4	**2523**	0.48	211,800	1.8	71 to 160	N56C to N280TC	24,100	31,100	14,600	421,296

311M L

391

435,550 lb•in

n_1 rpm		i	n_2 rpm	T_{n2} lb•in	P_{n1} hp	P (IEC)	NEMA	Rn_2 [lbs] NHC/NPC	HZ/PZ	FZ	$T_{n2\ max}$ lb•in
1800	**311ML1**	**4.09**	440	139,300	268	200 to 250	—	6,920	9,030	1,920	515,999
	311ML1	**5.25**	343	146,500	268	200 to 250	—	7,460	9,730	2,090	515,999
	311ML1	**6.23**	289	152,400	268	200 to 250	—	7,850	10,200	2,210	515,999
	311ML2	**14.0**	128	170,100	154	180 to 250	N320TC to N360TC	10,000	13,100	2,900	515,999
	311ML2	**16.7**	108	174,900	154	180 to 250	N320TC to N360TC	10,600	13,800	3,070	515,999
	311ML2	**18.0**	100	212,100	154	180 to 250	N320TC to N360TC	10,800	14,100	3,150	515,999
	311ML2	**21.5**	84	174,500	154	180 to 250	N320TC to N360TC	11,400	14,900	3,340	515,999
	311ML2	**25.5**	71	191,500	154	180 to 250	N320TC to N360TC	12,000	15,600	3,540	515,999
	311ML2	**27.6**	65	236,300	154	180 to 250	N320TC to N360TC	12,300	16,000	3,630	515,999
	311ML2	**32.7**	55	245,700	154	180 to 250	N320TC to N360TC	12,900	16,800	3,840	515,999
	311ML2	**38.8**	46	240,700	154	180 to 250	N320TC to N360TC	13,600	17,700	4,070	515,999
	311ML3	**50.5**	36	237,300	80	132 to 200	N250TC to N280TC	14,700	19,200	4,440	515,999
	311ML3	**60.2**	29.9	256,900	80	132 to 200	N250TC to N280TC	15,500	20,200	4,710	515,999
	311ML3	**71.1**	25.3	270,000	80	132 to 200	N250TC to N280TC	16,300	21,300	4,980	515,999
	311ML3	**77.3**	23.3	283,200	80	132 to 200	N250TC to N280TC	16,700	21,800	5,120	515,999
	311ML3	**89.3**	20.2	289,100	80	132 to 200	N250TC to N280TC	17,400	22,500	5,370	515,999
	311ML3	**104**	17.3	302,400	80	132 to 200	N250TC to N280TC	18,300	22,500	5,640	515,999
	311ML3	**115**	15.7	295,300	80	132 to 200	N250TC to N280TC	18,800	22,500	5,830	515,999
	311ML3	**133**	13.5	300,100	71	132 to 200	N250TC to N280TC	19,700	22,500	6,130	515,999
	311ML3	**147**	12.2	302,500	64	132 to 200	N250TC to N280TC	20,300	22,500	6,340	515,999
	311ML3	**161**	11.2	306,200	59	132 to 200	N250TC to N280TC	20,800	22,500	6,540	515,999
	311ML3	**171**	10.5	308,000	56	132 to 200	N250TC to N280TC	21,200	22,500	6,670	515,999
	311ML3	**191**	9.4	283,400	46	132 to 200	N250TC to N280TC	21,500	22,500	6,920	515,999
	311ML3	**203**	8.9	312,400	48	132 to 200	N250TC to N280TC	21,500	22,500	7,060	515,999
	311ML3	**245**	7.3	316,400	40	132 to 200	N250TC to N280TC	21,500	22,500	7,520	515,999
	311ML3	**291**	6.2	242,400	26.1	132 to 200	N250TC to N280TC	21,500	22,500	7,960	515,999
	311ML4	**348**	5.2	399,500	37	71 to 160	N56C to N280TC	21,500	22,500	8,450	515,999
	311ML4	**410**	4.4	404,200	32	71 to 160	N56C to N280TC	21,900	22,900	8,930	515,999
	311ML4	**512**	3.5	407,400	25.7	71 to 160	N56C to N280TC	22,600	23,600	9,610	515,999

311M L

391

435,550 lb•in

n_1 rpm		i	n_2 rpm	T_{n2} lb•in	P_{n1} hp	P (IEC)	NEMA	Rn_2 [lbs] NHC/NPC	HZ/PZ	FZ	$T_{n2\ max}$ lb•in
1800	**311ML4**	**568**	3.2	351,600	20.0	71 to 160	N56C to N280TC	23,000	24,000	9,950	515,999
	311ML4	**627**	2.9	357,700	18.4	71 to 160	N56C to N280TC	23,300	24,300	10,300	515,999
	311ML4	**825**	2.2	374,300	14.6	71 to 160	N56C to N280TC	24,200	25,300	11,300	515,999
	311ML4	**986**	1.8	385,000	12.6	71 to 160	N56C to N280TC	24,900	26,000	12,000	515,999
	311ML4	**1058**	1.7	389,300	11.9	71 to 160	N56C to N280TC	25,100	26,200	12,200	515,999
	311ML4	**1230**	1.5	398,600	10.5	71 to 160	N56C to N280TC	25,700	26,800	12,900	515,999
	311ML4	**1415**	1.3	364,900	8.3	71 to 160	N56C to N280TC	26,200	27,300	13,500	515,999
	311ML4	**1680**	1.1	318,900	6.1	71 to 160	N56C to N280TC	26,800	28,000	14,300	515,999
	311ML4	**1766**	1.0	365,100	6.7	71 to 160	N56C to N280TC	27,000	28,200	14,500	515,999
	311ML4	**2096**	0.86	322,800	5.0	71 to 160	N56C to N280TC	27,700	28,900	14,600	515,999
1200	**311ML1**	**4.09**	293	157,300	268	200 to 250	—	7,820	10,200	2,200	515,999
	311ML1	**5.25**	229	165,500	268	200 to 250	—	8,420	11,000	2,390	515,999
	311ML1	**6.23**	193	172,100	268	200 to 250	—	8,870	11,600	2,530	515,999
	311ML2	**14.0**	86	192,100	154	180 to 250	N320TC to N360TC	11,300	14,800	3,320	515,999
	311ML2	**16.7**	72	197,500	154	180 to 250	N320TC to N360TC	11,900	15,600	3,520	515,999
	311ML2	**18.0**	67	239,500	154	180 to 250	N320TC to N360TC	12,200	15,900	3,600	515,999
	311ML2	**21.5**	56	197,100	154	180 to 250	N320TC to N360TC	12,900	16,800	3,820	515,999
	311ML2	**25.5**	47	214,600	154	180 to 250	N320TC to N360TC	13,500	17,700	4,050	515,999
	311ML2	**27.6**	44	260,300	154	180 to 250	N320TC to N360TC	13,900	18,100	4,150	515,999
	311ML2	**32.7**	37	263,000	154	180 to 250	N320TC to N360TC	14,600	19,000	4,400	515,999
	311ML2	**38.8**	31	240,700	125	180 to 250	N320TC to N360TC	15,400	20,000	4,660	515,999
	311ML3	**50.5**	23.8	252,100	80	132 to 200	N250TC to N280TC	16,600	21,700	5,080	515,999
	311ML3	**60.2**	19.9	290,100	80	132 to 200	N250TC to N280TC	17,500	22,500	5,390	515,999
	311ML3	**71.1**	16.9	305,000	80	132 to 200	N250TC to N280TC	18,400	22,500	5,700	515,999
	311ML3	**77.3**	15.5	295,700	80	132 to 200	N250TC to N280TC	18,900	22,500	5,860	515,999
	311ML3	**89.3**	13.4	326,500	76	132 to 200	N250TC to N280TC	19,700	22,500	6,150	515,999
	311ML3	**104**	11.6	341,500	69	132 to 200	N250TC to N280TC	20,600	22,500	6,460	515,999
	311ML3	**115**	10.5	308,300	56	132 to 200	N250TC to N280TC	21,200	22,500	6,680	515,999
	311ML3	**133**	9.0	312,100	49	132 to 200	N250TC to N280TC	21,500	22,500	7,020	515,999
	311ML3	**147**	8.2	314,100	45	132 to 200	N250TC to N280TC	21,500	22,500	7,260	515,999
	311ML3	**161**	7.4	316,100	41	132 to 200	N250TC to N280TC	21,500	22,500	7,480	515,999
	311ML3	**171**	7.0	317,400	39	132 to 200	N250TC to N280TC	21,500	22,500	7,630	515,999
	311ML3	**191**	6.3	283,400	31	132 to 200	N250TC to N280TC	21,500	22,500	7,920	515,999
	311ML3	**203**	5.9	321,100	33	132 to 200	N250TC to N280TC	21,500	22,500	8,080	515,999
	311ML3	**245**	4.9	325,900	27.7	132 to 200	N250TC to N280TC	21,600	22,600	8,610	515,999
	311ML3	**291**	4.1	251,600	18.0	132 to 200	N250TC to N280TC	22,100	23,100	9,110	515,999
	311ML4	**348**	3.5	407,600	25.2	71 to 160	N56C to N280TC	22,700	23,700	9,670	515,999
	311ML4	**410**	2.9	410,100	21.5	71 to 160	N56C to N280TC	23,300	24,300	10,200	515,999
	311ML4	**512**	2.3	414,000	17.4	71 to 160	N56C to N280TC	24,000	25,100	11,000	515,999
	311ML4	**568**	2.1	376,200	14.3	71 to 160	N56C to N280TC	24,400	25,400	11,400	515,999
	311ML4	**627**	1.9	382,100	13.1	71 to 160	N56C to N280TC	24,700	25,800	11,800	515,999
	311ML4	**825**	1.5	398,900	10.4	71 to 160	N56C to N280TC	25,700	26,800	12,900	515,999
	311ML4	**986**	1.2	410,300	8.9	71 to 160	N56C to N280TC	26,400	27,500	13,700	515,999
	311ML4	**1058**	1.1	414,900	8.4	71 to 160	N56C to N280TC	26,600	27,800	14,000	515,999
	311ML4	**1230**	0.98	423,200	7.4	71 to 160	N56C to N280TC	27,200	28,400	14,600	515,999
	311ML4	**1415**	0.85	365,100	5.5	71 to 160	N56C to N280TC	27,800	29,000	14,600	515,999
	311ML4	**1680**	0.71	322,800	4.1	71 to 160	N56C to N280TC	28,400	29,700	14,600	515,999
	311ML4	**1766**	0.68	365,100	4.4	71 to 160	N56C to N280TC	28,600	29,900	14,600	515,999
	311ML4	**2096**	0.57	322,800	3.3	71 to 160	N56C to N280TC	29,400	30,600	14,600	515,999

313M L

409

539,360 lb•in

n_1 rpm		i	n_2 rpm	T_{n2} lb•in	P_{n1} hp	P (IEC)	NEMA	Rn_2 [lbs] NHC/NPC	HZ/PZ	FZ	$T_{n2\ max}$ lb•in
1800	**313ML2**	**14.2**	127	236,200	201	180 to 250	N320TC to N360TC	13,900	17,500	3,580	929,329
	313ML2	**16.9**	106	243,000	201	180 to 250	N320TC to N360TC	14,700	18,400	3,800	929,329
	313ML2	**18.5**	97	297,900	201	180 to 250	N320TC to N360TC	15,100	18,900	3,910	929,329
	313ML2	**21.8**	83	255,800	201	180 to 250	N320TC to N360TC	15,800	19,800	4,130	929,329
	313ML2	**25.8**	70	266,000	201	180 to 250	N320TC to N360TC	16,700	20,900	4,370	929,329

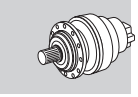

313M L	409	539,360 lb•in

n_1 rpm		i	n_2 rpm	T_{n2} lb•in	P_{n1} hp	P (IEC)	NEMA	Rn_2 [lbs] NHC/NPC	HZ/PZ	FZ	$T_{n2\ max}$ lb•in
1800	**313ML2**	**28.4**	63	333,400	201	180 to 250	N320TC to N360TC	17,200	21,500	4,510	929,329
	313ML2	**33.6**	53	346,700	201	180 to 250	N320TC to N360TC	18,100	22,600	4,770	929,329
	313ML2	**40.5**	44	267,300	200	180 to 250	N320TC to N360TC	19,100	23,900	5,080	929,329
	313ML3	**51.1**	35	265,500	80	132 to 200	N250TC to N280TC	20,500	25,600	5,490	929,329
	313ML3	**61.0**	29.5	316,800	80	132 to 200	N250TC to N280TC	21,600	27,000	5,820	929,329
	313ML3	**72.0**	25.0	327,800	80	132 to 200	N250TC to N280TC	22,700	28,400	6,150	929,329
	313ML3	**78.3**	23.0	361,800	80	132 to 200	N250TC to N280TC	23,300	29,100	6,330	929,329
	313ML3	**92.4**	19.5	377,200	80	132 to 200	N250TC to N280TC	24,500	30,600	6,680	929,329
	313ML3	**110**	16.4	382,800	80	132 to 200	N250TC to N280TC	25,800	32,200	7,080	929,329
	313ML3	**120**	14.9	364,500	80	132 to 200	N250TC to N280TC	26,500	33,200	7,300	929,329
	313ML3	**135**	13.3	414,800	80	132 to 200	N250TC to N280TC	27,400	34,300	7,580	929,329
	313ML3	**143**	12.6	364,800	80	132 to 200	N250TC to N280TC	27,900	34,900	7,730	929,329
	313ML3	**151**	11.9	365,800	76	132 to 200	N250TC to N280TC	28,400	35,500	7,880	929,329
	313ML3	**163**	11.0	435,200	80	132 to 200	N250TC to N280TC	29,000	36,300	8,080	929,329
	313ML3	**176**	10.2	366,600	65	132 to 200	N250TC to N280TC	29,700	37,100	8,280	929,329
	313ML3	**182**	9.9	267,300	46	132 to 200	N250TC to N280TC	29,900	37,400	8,380	929,329
	313ML3	**194**	9.3	430,500	70	132 to 200	N250TC to N280TC	29,900	37,400	8,550	929,329
	313ML3	**209**	8.6	369,900	55	132 to 200	N250TC to N280TC	29,900	37,400	8,770	929,329
	313ML3	**252**	7.1	374,000	46	132 to 200	N250TC to N280TC	29,900	37,400	9,340	929,329
	313ML3	**304**	5.9	267,700	27.6	132 to 200	N250TC to N280TC	29,900	37,400	9,940	929,329
	313ML4	**394**	4.6	494,700	40	71 to 160	N56C to N280TC	30,300	37,900	10,800	929,329
	313ML4	**452**	4.0	498,200	36	71 to 160	N56C to N280TC	30,900	38,600	11,300	929,329
	313ML4	**514**	3.5	406,300	25.5	71 to 160	N56C to N280TC	31,400	39,400	11,800	929,329
	313ML4	**564**	3.2	480,100	27.5	71 to 160	N56C to N280TC	31,900	39,900	12,200	929,329
	313ML4	**633**	2.8	430,500	21.9	71 to 160	N56C to N280TC	32,400	40,500	12,700	929,329
	313ML4	**695**	2.6	428,300	19.9	71 to 160	N56C to N280TC	32,800	41,100	13,100	929,329
	313ML4	**790**	2.3	432,400	17.7	71 to 160	N56C to N280TC	33,400	41,900	13,700	929,329
	313ML4	**889**	2.0	447,100	16.2	71 to 160	N56C to N280TC	34,000	42,600	14,200	929,329
	313ML4	**1014**	1.8	457,500	14.6	71 to 160	N56C to N280TC	34,600	43,400	14,900	929,329
	313ML4	**1117**	1.6	439,600	12.7	71 to 160	N56C to N280TC	35,100	44,000	15,300	929,329
	313ML4	**1266**	1.4	475,500	12.1	71 to 160	N56C to N280TC	35,800	44,800	16,000	929,329
	313ML4	**1394**	1.3	444,300	10.3	71 to 160	N56C to N280TC	36,300	45,400	16,500	929,329
	313ML4	**1502**	1.2	489,900	10.5	71 to 160	N56C to N280TC	36,600	45,900	16,900	929,329
	313ML4	**1817**	0.99	505,600	9.0	71 to 160	N56C to N280TC	37,700	47,100	18,000	929,329
	313ML4	**2187**	0.82	354,900	5.2	71 to 160	N56C to N280TC	38,700	48,400	18,000	929,329
1200	**313ML1**	**4.14**	290	220,300	335	—	—	10,900	13,600	2,720	929,329
	313ML1	**5.40**	222	232,500	335	—	—	11,800	14,800	2,970	929,329
	313ML1	**6.50**	185	222,400	335	—	—	12,500	15,600	3,160	929,329
	313ML2	**14.2**	84	266,700	201	180 to 250	N320TC to N360TC	15,800	19,700	4,100	929,329
	313ML2	**16.9**	71	274,500	201	180 to 250	N320TC to N360TC	16,600	20,800	4,350	929,329
	313ML2	**18.5**	65	336,500	201	180 to 250	N320TC to N360TC	17,100	21,400	4,480	929,329
	313ML2	**21.8**	55	288,900	201	180 to 250	N320TC to N360TC	17,900	22,400	4,720	929,329
	313ML2	**25.8**	46	299,000	201	180 to 250	N320TC to N360TC	18,800	23,600	5,000	929,329
	313ML2	**28.4**	42	359,100	201	180 to 250	N320TC to N360TC	19,400	24,300	5,160	929,329
	313ML2	**33.6**	36	356,400	201	180 to 250	N320TC to N360TC	20,400	25,500	5,460	929,329
	313ML2	**40.5**	29.6	267,300	134	180 to 250	N320TC to N360TC	21,600	27,000	5,810	929,329
	313ML3	**51.1**	23.5	299,800	80	132 to 200	N250TC to N280TC	23,100	29,000	6,280	929,329
	313ML3	**61.0**	19.7	357,700	80	132 to 200	N250TC to N280TC	24,400	30,500	6,660	929,329
	313ML3	**72.0**	16.7	370,200	80	132 to 200	N250TC to N280TC	25,600	32,100	7,040	929,329
	313ML3	**78.3**	15.3	400,700	80	132 to 200	N250TC to N280TC	26,300	32,900	7,240	929,329
	313ML3	**92.4**	13.0	417,700	80	132 to 200	N250TC to N280TC	27,600	34,600	7,650	929,329
	313ML3	**110**	10.9	421,400	80	132 to 200	N250TC to N280TC	29,100	36,400	8,100	929,329
	313ML3	**120**	10.0	366,800	64	132 to 200	N250TC to N280TC	29,900	37,400	8,360	929,329
	313ML3	**135**	8.9	453,600	70	132 to 200	N250TC to N280TC	29,900	37,400	8,680	929,329
	313ML3	**143**	8.4	370,500	54	132 to 200	N250TC to N280TC	29,900	37,400	8,850	929,329
	313ML3	**151**	7.9	371,700	51	132 to 200	N250TC to N280TC	29,900	37,400	9,020	929,329
	313ML3	**163**	7.4	460,400	59	132 to 200	N250TC to N280TC	29,900	37,400	9,250	929,329
	313ML3	**176**	6.8	375,000	45	132 to 200	N250TC to N280TC	29,900	37,400	9,480	929,329
	313ML3	**182**	6.6	267,600	31	132 to 200	N250TC to N280TC	29,900	37,400	9,590	929,329
	313ML3	**194**	6.2	430,500	46	132 to 200	N250TC to N280TC	29,900	37,400	9,790	929,329
	313ML3	**209**	5.8	378,800	38	132 to 200	N250TC to N280TC	29,900	37,400	10,000	929,329
	313ML3	**252**	4.8	385,300	32	132 to 200	N250TC to N280TC	30,100	37,700	10,700	929,329

313M L

409

539,360 lb•in

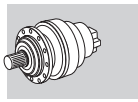

n_1 rpm		i	n_2 rpm	T_{n2} lb•in	P_{n1} hp	P (IEC)	NEMA	Rn_2 [lbs] NHC/NPC	HZ/PZ	FZ	$T_{n2\ max}$ lb•in
1200	**313ML3**	**304**	4.0	279,100	19.2	132 to 200	N250TC to N280TC	30,900	38,700	11,400	929,329
	313ML4	**394**	3.0	505,200	27.6	71 to 160	N56C to N280TC	32,100	40,200	12,400	929,329
	313ML4	**452**	2.7	508,700	24.2	71 to 160	N56C to N280TC	32,700	40,900	13,000	929,329
	313ML4	**514**	2.3	436,100	18.3	71 to 160	N56C to N280TC	33,300	41,700	13,600	929,329
	313ML4	**564**	2.1	480,100	18.3	71 to 160	N56C to N280TC	33,800	42,300	14,000	929,329
	313ML4	**633**	1.9	436,200	14.8	71 to 160	N56C to N280TC	34,300	43,000	14,500	929,329
	313ML4	**695**	1.7	459,700	14.2	71 to 160	N56C to N280TC	34,800	43,500	15,000	929,329
	313ML4	**790**	1.5	440,800	12.0	71 to 160	N56C to N280TC	35,400	44,300	15,600	929,329
	313ML4	**889**	1.3	479,900	11.6	71 to 160	N56C to N280TC	36,000	45,100	16,300	929,329
	313ML4	**1014**	1.2	491,000	10.4	71 to 160	N56C to N280TC	36,700	46,000	17,000	929,329
	313ML4	**1117**	1.1	448,200	8.6	71 to 160	N56C to N280TC	37,200	46,600	17,600	929,329
	313ML4	**1266**	0.95	505,600	8.6	71 to 160	N56C to N280TC	37,900	47,400	18,000	929,329
	313ML4	**1394**	0.86	449,700	6.9	71 to 160	N56C to N280TC	38,400	48,100	18,000	929,329
	313ML4	**1502**	0.80	505,600	7.2	71 to 160	N56C to N280TC	38,800	48,600	18,000	929,329
	313ML4	**1817**	0.66	505,600	6.0	71 to 160	N56C to N280TC	39,900	50,000	18,000	929,329
	313ML4	**2187**	0.55	354,900	3.5	71 to 160	N56C to N280TC	41,000	51,300	18,000	929,329

B

314M L

427

713,720 lb•in

n_1 rpm		i	n_2 rpm	T_{n2} lb•in	P_{n1} hp	P (IEC)	NEMA	Rn_2 [lbs] NHC/NPC	HZ/PZ	FZ	$T_{n2\ max}$ lb•in
1800	**314ML2**	**17.4**	104	322,200	235	200 to 250	—	14,500	17,700	4,310	1,017,836
	314ML2	**22.3**	81	339,200	235	200 to 250	—	15,600	19,000	4,680	1,017,836
	314ML2	**26.5**	68	352,800	235	200 to 250	—	16,400	20,000	4,960	1,017,836
	314ML2	**28.0**	64	425,700	235	200 to 250	—	16,700	20,400	5,050	1,017,836
	314ML2	**33.2**	54	442,700	235	200 to 250	—	17,600	21,400	5,350	1,017,836
	314ML2	**38.6**	47	419,500	235	200 to 250	—	18,400	22,400	5,620	1,017,836
	314ML3	**62.6**	28.8	412,200	101	160 to 250	N320TC to N360TC	21,200	25,900	6,600	1,017,836
	314ML3	**73.9**	24.4	426,500	101	160 to 250	N320TC to N360TC	22,300	27,200	6,980	1,017,836
	314ML3	**92.7**	19.4	444,600	101	160 to 250	N320TC to N360TC	23,900	29,200	7,530	1,017,836
	314ML3	**108**	16.7	461,000	101	160 to 250	N320TC to N360TC	25,000	30,500	7,920	1,017,836
	314ML3	**138**	13.0	582,600	101	160 to 250	N320TC to N360TC	26,900	32,900	8,600	1,017,836
	314ML3	**164**	11.0	517,300	99	160 to 250	N320TC to N360TC	28,400	34,600	9,110	1,017,836
	314ML3	**174**	10.4	526,800	95	160 to 250	N320TC to N360TC	28,800	35,200	9,280	1,017,836
	314ML3	**206**	8.7	532,900	81	160 to 250	N320TC to N360TC	29,200	35,600	9,820	1,017,836
	314ML3	**240**	7.5	421,500	55	160 to 250	N320TC to N360TC	29,200	35,600	10,300	1,017,836
	314ML4	**314**	5.7	643,700	54	132 to 200	N250TC to N280TC	29,200	35,600	11,300	1,017,836
	314ML4	**394**	4.6	657,500	54	132 to 200	N250TC to N280TC	29,500	36,100	12,200	1,017,836
	314ML4	**458**	3.9	656,700	46	132 to 200	N250TC to N280TC	30,200	36,800	12,800	1,017,836
	314ML4	**495**	3.6	668,800	44	132 to 200	N250TC to N280TC	30,500	37,200	13,200	1,017,836
	314ML4	**575**	3.1	582,100	33	132 to 200	N250TC to N280TC	31,200	38,000	13,800	1,017,836
	314ML4	**588**	3.1	641,000	35	132 to 200	N250TC to N280TC	31,300	38,200	13,900	1,017,836
	314ML4	**668**	2.7	669,000	32	132 to 200	N250TC to N280TC	31,900	38,900	14,500	1,017,836
	314ML4	**738**	2.4	642,300	28.1	132 to 200	N250TC to N280TC	32,300	39,400	15,000	1,017,836
	314ML4	**858**	2.1	650,200	24.5	132 to 200	N250TC to N280TC	33,000	40,300	15,800	1,017,836
	314ML4	**926**	1.9	611,100	21.3	132 to 200	N250TC to N280TC	33,400	40,700	16,200	1,017,836
	314ML4	**1038**	1.7	660,300	20.5	132 to 200	N250TC to N280TC	33,900	41,400	16,800	1,017,836
	314ML4	**1099**	1.6	620,600	18.2	132 to 200	N250TC to N280TC	34,200	41,700	17,200	1,017,836
	314ML4	**1277**	1.4	629,100	15.9	132 to 200	N250TC to N280TC	34,900	42,600	18,000	1,017,836
	314ML4	**1485**	1.2	541,600	11.8	132 to 200	N250TC to N280TC	35,700	43,600	19,000	1,017,836
	314ML4	**1796**	1.0	559,700	10.1	132 to 200	N250TC to N280TC	36,700	44,800	20,200	1,017,836
1200	**314ML2**	**17.4**	69	363,900	235	200 to 250	—	16,300	19,900	4,930	1,017,836
	314ML2	**22.3**	54	383,200	235	200 to 250	—	17,600	21,500	5,360	1,017,836
	314ML2	**26.5**	45	394,200	235	200 to 250	—	18,500	22,600	5,680	1,017,836
	314ML2	**28.0**	43	465,300	235	200 to 250	—	18,800	23,000	5,780	1,017,836
	314ML2	**33.2**	36	467,800	235	200 to 250	—	19,800	24,200	6,120	1,017,836

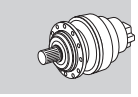

B

314M L

427

713,720 lb•in

n_1 rpm		i	n_2 rpm	T_{n2} lb•in	P_{n1} hp	P (IEC)	NEMA	Rn_2 [lbs] NHC/NPC	HZ/PZ	FZ	$T_{n2\ max}$ lb•in
1200	**314ML2**	**38.6**	31	419,500	220	200 to 250		20,800	25,300	6,440	1,017,836
	314ML3	**62.6**	19.2	465,600	101	160 to 250	N320TC to N360TC	24,000	29,300	7,560	1,017,836
	314ML3	**73.9**	16.2	481,700	101	160 to 250	N320TC to N360TC	25,200	30,800	7,990	1,017,836
	314ML3	**92.7**	12.9	502,100	101	160 to 250	N320TC to N360TC	27,000	32,900	8,620	1,017,836
	314ML3	**108**	11.1	520,600	101	160 to 250	N320TC to N360TC	28,200	34,500	9,060	1,017,836
	314ML3	**138**	8.7	631,900	95	160 to 250	N320TC to N360TC	29,200	35,600	9,850	1,017,836
	314ML3	**164**	7.3	526,500	67	160 to 250	N320TC to N360TC	29,200	35,600	10,400	1,017,836
	314ML3	**174**	6.9	540,600	65	160 to 250	N320TC to N360TC	29,200	35,600	10,600	1,017,836
	314ML3	**206**	5.8	546,300	55	160 to 250	N320TC to N360TC	29,200	35,600	11,200	1,017,836
	314ML3	**240**	5.0	424,300	37	160 to 250	N320TC to N360TC	29,200	35,600	11,800	1,017,836
	314ML4	**314**	3.8	669,900	46	132 to 200	N250TC to N280TC	30,300	37,000	12,900	1,017,836
	314ML4	**394**	3.0	665,900	36	132 to 200	N250TC to N280TC	31,300	38,200	14,000	1,017,836
	314ML4	**458**	2.6	668,500	31	132 to 200	N250TC to N280TC	32,000	39,000	14,700	1,017,836
	314ML4	**495**	2.4	671,300	29.2	132 to 200	N250TC to N280TC	32,300	39,500	15,100	1,017,836
	314ML4	**575**	2.1	607,200	22.7	132 to 200	N250TC to N280TC	33,000	40,300	15,800	1,017,836
	314ML4	**588**	2.0	651,700	23.8	132 to 200	N250TC to N280TC	33,100	40,400	16,000	1,017,836
	314ML4	**668**	1.8	685,400	22.1	132 to 200	N250TC to N280TC	33,800	41,200	16,600	1,017,836
	314ML4	**738**	1.6	663,800	19.3	132 to 200	N250TC to N280TC	34,200	41,800	17,200	1,017,836
	314ML4	**858**	1.4	672,000	16.8	132 to 200	N250TC to N280TC	35,000	42,700	18,100	1,017,836
	314ML4	**926**	1.3	633,800	14.7	132 to 200	N250TC to N280TC	35,400	43,200	18,600	1,017,836
	314ML4	**1038**	1.2	682,500	14.1	132 to 200	N250TC to N280TC	35,900	43,900	19,300	1,017,836
	314ML4	**1099**	1.1	643,700	12.6	132 to 200	N250TC to N280TC	36,200	44,200	19,600	1,017,836
	314ML4	**1277**	0.94	648,800	10.9	132 to 200	N250TC to N280TC	37,000	45,200	20,200	1,017,836
	314ML4	**1485**	0.81	559,900	8.1	132 to 200	N250TC to N280TC	37,800	46,200	20,200	1,017,836
	314ML4	**1796**	0.67	559,900	6.7	132 to 200	N250TC to N280TC	38,900	47,400	20,200	1,017,836

315M L

443

892,160 lb•in

n_1 rpm		i	n_2 rpm	T_{n2} lb•in	P_{n1} hp	P (IEC)	NEMA	Rn_2 [lbs] NHC/NPC	HZ/PZ	FZ	$T_{n2\ max}$ lb•in
1800	**315ML2**	**17.4**	104	479,300	268	200 to 250	—	14,500	17,700	4,310	1,194,851
	315ML2	**22.3**	81	516,500	268	200 to 250	—	15,600	19,000	4,680	1,194,851
	315ML2	**26.5**	68	543,700	268	200 to 250	—	16,400	20,000	4,960	1,194,851
	315ML2	**28.0**	64	534,000	268	200 to 250	—	16,700	20,400	5,050	1,194,851
	315ML2	**33.2**	54	562,200	268	200 to 250	—	17,600	21,400	5,350	1,194,851
	315ML2	**38.6**	47	524,400	268	200 to 250	—	18,400	22,400	5,620	1,194,851
	315ML3	**59.6**	30	650,400	154	180 to 250	N320TC to N360TC	20,900	25,500	6,500	1,194,851
	315ML3	**71.1**	25.3	665,200	154	180 to 250	N320TC to N360TC	22,100	26,900	6,890	1,194,851
	315ML3	**91.3**	19.7	689,000	154	180 to 250	N320TC to N360TC	23,800	29,000	7,490	1,194,851
	315ML3	**108**	16.6	709,700	154	180 to 250	N320TC to N360TC	25,000	30,600	7,930	1,194,851
	315ML3	**139**	12.9	752,700	154	180 to 250	N320TC to N360TC	27,000	32,900	8,620	1,194,851
	315ML3	**165**	10.9	775,300	147	180 to 250	N320TC to N360TC	28,400	34,700	9,120	1,194,851
	315ML3	**174**	10.3	658,900	118	180 to 250	N320TC to N360TC	28,900	35,300	9,290	1,194,851
	315ML3	**207**	8.7	666,300	101	180 to 250	N320TC to N360TC	29,200	35,600	9,840	1,194,851
	315ML3	**241**	7.5	526,900	68	180 to 250	N320TC to N360TC	29,200	35,600	10,300	1,194,851
	315ML4	**302**	6.0	824,400	80	132 to 200	N250TC to N280TC	29,200	35,600	11,200	1,194,851
	315ML4	**370**	4.9	837,400	73	132 to 200	N250TC to N280TC	29,300	35,700	11,900	1,194,851
	315ML4	**441**	4.1	837,400	61	132 to 200	N250TC to N280TC	30,000	36,600	12,700	1,194,851
	315ML4	**487**	3.7	837,400	55	132 to 200	N250TC to N280TC	30,400	37,200	13,100	1,194,851
	315ML4	**533**	3.4	837,400	51	132 to 200	N250TC to N280TC	30,800	37,600	13,500	1,194,851
	315ML4	**591**	3.0	837,400	46	132 to 200	N250TC to N280TC	31,300	38,200	14,000	1,194,851
	315ML4	**672**	2.7	837,400	40	132 to 200	N250TC to N280TC	31,900	38,900	14,600	1,194,851
	315ML4	**741**	2.4	839,100	37	132 to 200	N250TC to N280TC	32,300	39,500	15,100	1,194,851
	315ML4	**862**	2.1	847,900	32	132 to 200	N250TC to N280TC	33,000	40,300	15,800	1,194,851
	315ML4	**930**	1.9	764,200	26.5	132 to 200	N250TC to N280TC	33,400	40,800	16,200	1,194,851

315M L	443	892,160 lb•in

n_1 rpm		i	n_2 rpm	T_{n2} lb•in	P_{n1} hp	P (IEC)	NEMA	Rn_2 [lbs] NHC/NPC	HZ/PZ	FZ	$T_{n2\ max}$ lb•in
1800	**315ML4**	**1043**	1.7	859,100	26.6	132 to 200	N250TC to N280TC	33,900	41,400	16,900	1,194,851
	315ML4	**1104**	1.6	776,100	22.7	132 to 200	N250TC to N280TC	34,200	41,800	17,200	1,194,851
	315ML4	**1284**	1.4	786,700	19.8	132 to 200	N250TC to N280TC	35,000	42,700	18,100	1,194,851
	315ML4	**1492**	1.2	677,600	14.6	132 to 200	N250TC to N280TC	35,700	43,600	19,000	1,194,851
	315ML4	**1805**	1.0	699,800	12.5	132 to 200	N250TC to N280TC	36,700	44,800	20,200	1,194,851
1200	**315ML2**	**17.4**	69	541,300	268	200 to 250	—	16,300	19,900	4,930	1,194,851
	315ML2	**22.3**	54	583,300	268	200 to 250	—	17,600	21,500	5,360	1,194,851
	315ML2	**26.5**	45	606,400	268	200 to 250	—	18,500	22,600	5,680	1,194,851
	315ML2	**28.0**	43	583,500	268	200 to 250	—	18,800	23,000	5,780	1,194,851
	315ML2	**33.2**	36	592,000	268	200 to 250	—	19,800	24,200	6,120	1,194,851
	315ML2	**38.6**	31	524,400	268	200 to 250	—	20,800	25,300	6,440	1,194,851
	315ML3	**59.6**	20.1	697,500	154	180 to 250	N320TC to N360TC	23,600	28,800	7,440	1,194,851
	315ML3	**71.1**	16.9	715,900	154	180 to 250	N320TC to N360TC	24,900	30,400	7,890	1,194,851
	315ML3	**91.3**	13.1	746,000	154	180 to 250	N320TC to N360TC	26,900	32,800	8,570	1,194,851
	315ML3	**108**	11.1	770,800	148	180 to 250	N320TC to N360TC	28,300	34,500	9,080	1,194,851
	315ML3	**139**	8.6	797,400	120	180 to 250	N320TC to N360TC	29,200	35,600	9,860	1,194,851
	315ML3	**165**	7.3	809,800	102	180 to 250	N320TC to N360TC	29,200	35,600	10,400	1,194,851
	315ML3	**174**	6.9	676,000	81	180 to 250	N320TC to N360TC	29,200	35,600	10,600	1,194,851
	315ML3	**207**	5.8	683,100	69	180 to 250	N320TC to N360TC	29,200	35,600	11,300	1,194,851
	315ML3	**241**	5.0	530,700	46	180 to 250	N320TC to N360TC	29,200	35,600	11,800	1,194,851
	315ML4	**302**	4.0	837,400	60	132 to 200	N250TC to N280TC	30,100	36,800	12,800	1,194,851
	315ML4	**370**	3.2	837,400	49	132 to 200	N250TC to N280TC	31,000	37,900	13,700	1,194,851
	315ML4	**441**	2.7	837,400	41	132 to 200	N250TC to N280TC	31,800	38,800	14,500	1,194,851
	315ML4	**487**	2.5	838,200	37	132 to 200	N250TC to N280TC	32,300	39,400	15,000	1,194,851
	315ML4	**533**	2.2	843,500	34	132 to 200	N250TC to N280TC	32,700	39,900	15,400	1,194,851
	315ML4	**591**	2.0	849,500	31	132 to 200	N250TC to N280TC	33,200	40,500	16,000	1,194,851
	315ML4	**672**	1.8	857,100	27.4	132 to 200	N250TC to N280TC	33,800	41,200	16,700	1,194,851
	315ML4	**741**	1.6	862,900	25.0	132 to 200	N250TC to N280TC	34,300	41,800	17,200	1,194,851
	315ML4	**862**	1.4	872,000	21.8	132 to 200	N250TC to N280TC	35,000	42,700	18,100	1,194,851
	315ML4	**930**	1.3	792,600	18.3	132 to 200	N250TC to N280TC	35,400	43,200	18,600	1,194,851
	315ML4	**1043**	1.2	883,500	18.2	132 to 200	N250TC to N280TC	36,000	43,900	19,300	1,194,851
	315ML4	**1104**	1.1	804,900	15.7	132 to 200	N250TC to N280TC	36,300	44,300	19,700	1,194,851
	315ML4	**1284**	0.93	811,000	13.6	132 to 200	N250TC to N280TC	37,100	45,200	20,200	1,194,851
	315ML4	**1492**	0.80	699,800	10.1	132 to 200	N250TC to N280TC	37,900	46,200	20,200	1,194,851
	315ML4	**1805**	0.66	699,800	8.3	132 to 200	N250TC to N280TC	38,900	47,500	20,200	1,194,851

316M L	459	1,189,450 lb•in

n_1 rpm		i	n_2 rpm	T_{n2} lb•in	P_{n1} hp	P (IEC)	NEMA	Rn_2 [lbs] HC/PC	HZ/PZ	FZ	$T_{n2\ max}$ lb•in
1800	**316ML2**	**17.4**	104	574,000	268	200 to 250	—	22,500	25,300	7,180	1,699,344
	316ML2	**21.8**	83	660,700	268	200 to 250	—	24,100	27,000	7,750	1,699,344
	316ML2	**22.3**	81	604,100	268	200 to 250	—	24,300	27,200	7,800	1,699,344
	316ML2	**26.5**	68	628,100	268	200 to 250	—	25,600	28,700	8,260	1,699,344
	316ML2	**28.0**	64	712,000	268	200 to 250	—	26,000	29,200	8,420	1,699,344
	316ML2	**33.2**	54	749,600	268	200 to 250	—	27,400	30,700	8,910	1,699,344
	316ML3	**59.6**	30	701,000	154	180 to 250	N320TC to N360TC	32,600	36,600	10,800	1,699,344
	316ML3	**71.1**	25.3	721,200	154	180 to 250	N320TC to N360TC	34,400	38,600	11,500	1,699,344
	316ML3	**76.5**	23.5	844,400	154	180 to 250	N320TC to N360TC	35,100	39,400	11,800	1,699,344
	316ML3	**89.3**	20.2	791,500	154	180 to 250	N320TC to N360TC	36,800	41,300	12,400	1,699,344
	316ML3	**96.0**	18.8	834,800	154	180 to 250	N320TC to N360TC	37,600	42,200	12,700	1,699,344
	316ML3	**114**	15.8	847,100	154	180 to 250	N320TC to N360TC	39,600	44,400	13,400	1,699,344
	316ML3	**117**	15.4	936,000	154	180 to 250	N320TC to N360TC	39,900	44,800	13,600	1,699,344
	316ML3	**139**	12.9	977,700	154	180 to 250	N320TC to N360TC	42,000	47,100	14,400	1,699,344
	316ML3	**165**	10.9	985,400	154	180 to 250	N320TC to N360TC	44,200	49,600	15,200	1,699,344

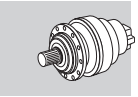

316M L	459	1,189,450 lb•in

n_1 rpm		i	n_2 rpm	T_{n2} lb•in	P_{n1} hp	P (IEC)	NEMA	Rn_2 [lbs] HC/PC	HZ/PZ	FZ	$T_{n2\ max}$ lb•in
1800	**316ML3**	**174**	10.3	878,500	154	180 to 250	N320TC to N360TC	45,000	50,500	15,500	1,699,344
	316ML3	**207**	8.7	880,800	133	180 to 250	N320TC to N360TC	45,400	50,900	16,400	1,699,344
	316ML4	**215**	8.4	1,005,300	80	132 to 200	N250TC to N280TC	45,400	50,900	16,600	1,699,344
	316ML4	**253**	7.1	1,033,200	80	132 to 200	N250TC to N280TC	45,400	50,900	17,500	1,699,344
	316ML4	**275**	6.5	1,077,000	80	132 to 200	N250TC to N280TC	45,400	50,900	18,000	1,699,344
	316ML4	**318**	5.7	1,072,600	80	132 to 200	N250TC to N280TC	45,400	50,900	18,900	1,699,344
	316ML4	**346**	5.2	880,800	80	132 to 200	N250TC to N280TC	45,400	50,900	19,500	1,699,344
	316ML4	**399**	4.5	895,600	72	132 to 200	N250TC to N280TC	46,100	51,700	20,400	1,699,344
	316ML4	**447**	4.0	1,101,600	79	132 to 200	N250TC to N280TC	46,800	52,500	21,200	1,699,344
	316ML4	**500**	3.6	1,105,100	71	132 to 200	N250TC to N280TC	47,600	53,400	22,000	1,699,344
	316ML4	**563**	3.2	1,005,800	58	132 to 200	N250TC to N280TC	48,400	54,300	22,900	1,699,344
	316ML4	**628**	2.9	963,600	49	132 to 200	N250TC to N280TC	49,200	55,200	23,700	1,699,344
	316ML4	**706**	2.5	982,100	45	132 to 200	N250TC to N280TC	50,000	56,100	24,700	1,699,344
	316ML4	**784**	2.3	993,700	41	132 to 200	N250TC to N280TC	50,800	56,900	25,600	1,699,344
	316ML4	**880**	2.0	1,014,300	37	132 to 200	N250TC to N280TC	51,600	57,900	26,600	1,699,344
	316ML4	**1020**	1.8	1,020,600	32	132 to 200	N250TC to N280TC	52,700	59,100	27,900	1,699,344
	316ML4	**1104**	1.6	1,029,000	30	132 to 200	N250TC to N280TC	53,300	59,800	28,700	1,699,344
	316ML4	**1237**	1.5	1,029,000	26.8	132 to 200	N250TC to N280TC	54,200	60,800	29,800	1,699,344
	316ML4	**1308**	1.4	1,046,900	25.8	132 to 200	N250TC to N280TC	54,600	61,300	30,300	1,699,344
	316ML4	**1553**	1.2	1,065,300	22.1	132 to 200	N250TC to N280TC	56,000	62,800	32,100	1,699,344
1200	**316ML2**	**17.4**	69	648,200	268	200 to 250	—	25,400	28,500	8,220	1,699,344
	316ML2	**21.8**	55	746,200	268	200 to 250	—	27,200	30,500	8,870	1,699,344
	316ML2	**22.3**	54	682,300	268	200 to 250	—	27,400	30,800	8,930	1,699,344
	316ML2	**26.5**	45	704,900	268	200 to 250	—	28,900	32,400	9,460	1,699,344
	316ML2	**28.0**	43	778,000	268	200 to 250	—	29,300	32,900	9,640	1,699,344
	316ML2	**33.2**	36	789,400	268	200 to 250	—	30,900	34,700	10,200	1,699,344
	316ML3	**59.6**	20.1	791,700	154	180 to 250	N320TC to N360TC	36,800	41,300	12,400	1,699,344
	316ML3	**71.1**	16.9	814,500	154	180 to 250	N320TC to N360TC	38,800	43,500	13,100	1,699,344
	316ML3	**76.5**	15.7	936,000	154	180 to 250	N320TC to N360TC	39,700	44,500	13,500	1,699,344
	316ML3	**89.3**	13.4	842,000	154	180 to 250	N320TC to N360TC	41,600	46,600	14,200	1,699,344
	316ML3	**96.0**	12.5	864,200	154	180 to 250	N320TC to N360TC	42,500	47,600	14,500	1,699,344
	316ML3	**114**	10.5	876,900	154	180 to 250	N320TC to N360TC	44,700	50,200	15,400	1,699,344
	316ML3	**117**	10.2	1,042,600	154	180 to 250	N320TC to N360TC	45,100	50,600	15,500	1,699,344
	316ML3	**139**	8.6	1,058,800	154	180 to 250	N320TC to N360TC	45,400	50,900	16,400	1,699,344
	316ML3	**165**	7.3	1,005,800	127	180 to 250	N320TC to N360TC	45,400	50,900	17,400	1,699,344
	316ML3	**174**	6.9	880,800	105	180 to 250	N320TC to N360TC	45,400	50,900	17,700	1,699,344
	316ML3	**207**	5.8	880,800	89	180 to 250	N320TC to N360TC	45,400	50,900	18,800	1,699,344
	316ML4	**215**	5.6	1,074,800	80	132 to 200	N250TC to N280TC	45,400	50,900	19,000	1,699,344
	316ML4	**253**	4.7	1,096,500	80	132 to 200	N250TC to N280TC	45,800	51,300	20,100	1,699,344
	316ML4	**275**	4.4	1,099,100	80	132 to 200	N250TC to N280TC	46,300	52,000	20,600	1,699,344
	316ML4	**318**	3.8	1,103,600	75	132 to 200	N250TC to N280TC	47,300	53,000	21,700	1,699,344
	316ML4	**346**	3.5	934,200	58	132 to 200	N250TC to N280TC	47,800	53,700	22,300	1,699,344
	316ML4	**399**	3.0	956,100	52	132 to 200	N250TC to N280TC	48,800	54,800	23,400	1,699,344
	316ML4	**447**	2.7	1,114,300	54	132 to 200	N250TC to N280TC	49,600	55,700	24,300	1,699,344
	316ML4	**500**	2.4	1,119,700	48	132 to 200	N250TC to N280TC	50,400	56,600	25,200	1,699,344
	316ML4	**563**	2.1	1,012,600	39	132 to 200	N250TC to N280TC	51,300	57,500	26,200	1,699,344
	316ML4	**628**	1.9	1,012,400	35	132 to 200	N250TC to N280TC	52,100	58,400	27,200	1,699,344
	316ML4	**706**	1.7	1,024,600	31	132 to 200	N250TC to N280TC	53,000	59,400	28,300	1,699,344
	316ML4	**784**	1.5	1,035,600	28.4	132 to 200	N250TC to N280TC	53,800	60,300	29,300	1,699,344
	316ML4	**880**	1.4	1,031,800	25.2	132 to 200	N250TC to N280TC	54,700	61,300	30,400	1,699,344
	316ML4	**1020**	1.2	1,063,700	22.4	132 to 200	N250TC to N280TC	55,800	62,600	31,900	1,699,344
	316ML4	**1104**	1.1	1,072,400	20.9	132 to 200	N250TC to N280TC	56,500	63,400	32,800	1,699,344
	316ML4	**1237**	0.97	1,045,400	18.2	132 to 200	N250TC to N280TC	57,400	64,400	33,700	1,699,344
	316ML4	**1308**	0.92	1,081,500	17.8	132 to 200	N250TC to N280TC	57,900	64,900	33,700	1,699,344
	316ML4	**1553**	0.77	1,081,500	15.0	132 to 200	N250TC to N280TC	59,300	66,500	33,700	1,699,344

317M L	471	1,836,440 lb•in

n_1 rpm		i	n_2 rpm	T_{n2} lb•in	P_{n1} hp	P (IEC)	NEMA	Rn_2 [lbs] HC/PC	HZ/PZ	FZ	$T_{n2\ max}$ lb•in
1800	**317ML3**	**58.1**	31	937,400	201	180 to 250	N320TC to N360TC	50,300	53,500	10,700	3,478,345
	317ML3	**69.3**	26.0	964,400	201	180 to 250	N320TC to N360TC	53,100	56,400	11,400	3,478,345
	317ML3	**89.0**	20.2	1,015,000	201	180 to 250	N320TC to N360TC	57,200	60,800	12,400	3,478,345
	317ML3	**106**	17.0	1,055,300	201	180 to 250	N320TC to N360TC	60,200	64,000	13,100	3,478,345
	317ML3	**116**	15.5	1,302,500	201	180 to 250	N320TC to N360TC	61,900	65,800	13,500	3,478,345
	317ML3	**138**	13.1	1,365,200	201	180 to 250	N320TC to N360TC	65,200	69,300	14,300	3,478,345
	317ML3	**166**	10.9	1,065,000	201	180 to 250	N320TC to N360TC	68,900	73,200	15,200	3,478,345
	317ML3	**179**	10.0	1,259,100	201	180 to 250	N320TC to N360TC	70,600	75,000	15,600	3,478,345
	317ML3	**213**	8.5	1,273,600	187	180 to 250	N320TC to N360TC	70,700	75,100	16,500	3,478,345
	317ML3	**252**	7.1	1,004,800	125	180 to 250	N320TC to N360TC	70,700	75,100	17,500	3,478,345
	317ML4	**378**	4.8	1,556,600	80	132 to 200	N250TC to N280TC	71,200	75,600	20,000	3,478,345
	317ML4	**449**	4	1,582,600	80	132 to 200	N250TC to N280TC	72,900	77,500	21,200	3,478,345
	317ML4	**493**	3.7	1,477,500	80	132 to 200	N250TC to N280TC	73,900	78,500	21,900	3,478,345
	317ML4	**552**	3.3	1,659,900	80	132 to 200	N250TC to N280TC	75,100	79,800	22,700	3,478,345
	317ML4	**619**	2.9	1,477,500	77	132 to 200	N250TC to N280TC	76,300	81,100	23,600	3,478,345
	317ML4	**719**	2.5	1,477,500	66	132 to 200	N250TC to N280TC	78,000	82,900	24,800	3,478,345
	317ML4	**792**	2.3	1,714,300	70	132 to 200	N250TC to N280TC	79,100	84,000	25,600	3,478,345
	317ML4	**904**	2.0	1,380,300	49	132 to 200	N250TC to N280TC	80,600	85,600	26,800	3,478,345
	317ML4	**1032**	1.7	1,521,300	48	132 to 200	N250TC to N280TC	82,100	87,300	28,000	3,478,345
	317ML4	**1134**	1.6	1,380,300	39	132 to 200	N250TC to N280TC	83,200	88,400	28,900	3,478,345
	317ML4	**1318**	1.4	1,380,300	34	132 to 200	N250TC to N280TC	85,100	90,400	30,400	3,478,345
	317ML4	**1595**	1.1	1,380,300	27.9	132 to 200	N250TC to N280TC	87,400	92,800	32,400	3,478,345
	317ML4	**1893**	0.95	1,329,900	22.7	132 to 200	N250TC to N280TC	89,600	95,100	33,700	3,478,345
1200	**317ML2**	**16.9**	71	874,000	335	—	—	39,300	41,700	8,150	3,478,345
	317ML2	**22.1**	54	922,600	335	—	—	42,500	45,200	8,900	3,478,345
	317ML2	**26.6**	45	928,400	335	—	—	45,000	47,800	9,470	3,478,345
	317ML2	**28.4**	42	1,070,200	335	—	—	45,800	48,700	9,680	3,478,345
	317ML2	**34.1**	35	1,092,800	335	—	—	48,500	51,500	10,300	3,478,345
	317ML2	**40.5**	29.6	999,800	335	—	—	51,000	54,200	10,900	3,478,345
	317ML3	**58.1**	20.7	1,058,600	201	180 to 250	N320TC to N360TC	56,800	60,400	12,300	3,478,345
	317ML3	**69.3**	17.3	1,089,100	201	180 to 250	N320TC to N360TC	59,900	63,700	13,000	3,478,345
	317ML3	**89.0**	13.5	1,146,300	201	180 to 250	N320TC to N360TC	64,600	68,600	14,200	3,478,345
	317ML3	**106**	11.4	1,191,800	201	180 to 250	N320TC to N360TC	68,000	72,200	15,000	3,478,345
	317ML3	**116**	10.3	1,463,100	201	180 to 250	N320TC to N360TC	69,900	74,300	15,500	3,478,345
	317ML3	**138**	8.7	1,477,500	201	180 to 250	N320TC to N360TC	70,700	75,100	16,400	3,478,345
	317ML3	**166**	7.2	1,073,600	135	180 to 250	N320TC to N360TC	70,700	75,100	17,400	3,478,345
	317ML3	**179**	6.7	1,293,300	151	180 to 250	N320TC to N360TC	70,700	75,100	17,900	3,478,345
	317ML3	**213**	5.6	1,307,900	128	180 to 250	N320TC to N360TC	70,700	75,100	18,900	3,478,345
	317ML3	**252**	4.8	1,018,800	84	180 to 250	N320TC to N360TC	71,200	75,600	20,100	3,478,345
	317ML4	**378**	3.2	1,667,800	80	132 to 200	N250TC to N280TC	75,400	80,100	22,900	3,478,345
	317ML4	**449**	2.7	1,694,900	80	132 to 200	N250TC to N280TC	77,300	82,100	24,300	3,478,345
	317ML4	**493**	2.4	1,480,600	65	132 to 200	N250TC to N280TC	78,300	83,200	25,100	3,478,345
	317ML4	**552**	2.2	1,751,600	68	132 to 200	N250TC to N280TC	79,600	84,500	26,000	3,478,345
	317ML4	**619**	1.9	1,508,200	52	132 to 200	N250TC to N280TC	80,900	85,900	27,000	3,478,345
	317ML4	**719**	1.7	1,526,700	46	132 to 200	N250TC to N280TC	82,600	87,800	28,400	3,478,345
	317ML4	**792**	1.5	1,714,300	47	132 to 200	N250TC to N280TC	83,800	89,000	29,400	3,478,345
	317ML4	**904**	1.3	1,380,300	33	132 to 200	N250TC to N280TC	85,400	90,700	30,700	3,478,345
	317ML4	**1032**	1.2	1,572,200	33	132 to 200	N250TC to N280TC	87,000	92,500	32,100	3,478,345
	317ML4	**1134**	1.1	1,380,300	26.2	132 to 200	N250TC to N280TC	88,200	93,700	33,100	3,478,345
	317ML4	**1318**	0.91	1,380,300	22.5	132 to 200	N250TC to N280TC	90,100	95,700	33,700	3,478,345
	317ML4	**1595**	0.75	1,380,300	18.6	132 to 200	N250TC to N280TC	92,600	98,400	33,700	3,478,345
	317ML4	**1893**	0.63	1,329,900	15.1	132 to 200	N250TC to N280TC	94,900	100,800	33,700	3,478,345

318M L	483	2,633,540 lb•in

n_1 rpm		i	n_2 rpm	T_{n2} lb•in	P_{n1} hp	P (IEC)	NEMA	Rn_2 [lbs] HC/PC	HZ/PZ	FZ	$T_{n2\ max}$ lb•in
1800	**318ML3**	**76.5**	23.5	1,660,700	268	200 to 250	—	55,800	58,700	15,700	4,425,375
	318ML3	**98.2**	18.3	1,748,500	268	200 to 250	—	60,100	63,300	17,100	4,425,375
	318ML3	**117**	15.4	1,811,500	268	200 to 250	—	63,300	66,600	18,100	4,425,375

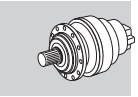

B

318M L

483

2,633,540 lb•in

n_1 rpm		i	n_2 rpm	T_{n2} lb•in	P_{n1} hp	P (IEC)	NEMA	Rn_2 [lbs] HC/PC	HZ/PZ	FZ	$T_{n2\ max}$ lb•in
1800	318ML3	123	14.6	1,832,400	268	200 to 250	—	64,300	67,700	18,400	4,425,375
	318ML3	146	12.3	1,898,400	268	200 to 250	—	67,700	71,300	19,500	4,425,375
	318ML3	170	10.6	1,958,400	268	200 to 250	—	70,800	74,600	20,500	4,425,375
	318ML4	262	6.9	2,019,000	154	180 to 250	N320TC to N360TC	72,100	75,900	23,700	4,425,375
	318ML4	313	5.8	2,036,700	154	180 to 250	N320TC to N360TC	72,100	75,900	25,100	4,425,375
	318ML4	337	5.3	2,044,100	154	180 to 250	N320TC to N360TC	72,100	75,900	25,700	4,425,375
	318ML4	402	4.5	2,089,200	154	180 to 250	N320TC to N360TC	73,200	77,100	27,300	4,425,375
	318ML4	422	4.3	2,107,100	154	180 to 250	N320TC to N360TC	73,700	77,600	27,700	4,425,375
	318ML4	477	3.8	2,150,500	146	180 to 250	N320TC to N360TC	75,000	79,000	28,900	4,425,375
	318ML4	515	3.5	2,179,100	136	180 to 250	N320TC to N360TC	75,900	79,900	29,600	4,425,375
	318ML4	612	2.9	2,243,100	118	180 to 250	N320TC to N360TC	77,700	81,900	31,400	4,425,375
	318ML4	647	2.8	2,264,400	113	180 to 250	N320TC to N360TC	78,400	82,500	32,000	4,425,375
	318ML4	726	2.5	2,308,600	103	180 to 250	N320TC to N360TC	79,700	83,900	33,200	4,425,375
	318ML4	768	2.3	2,327,300	98	180 to 250	N320TC to N360TC	80,300	84,600	33,800	4,425,375
	318ML4	911	2.0	2,385,900	84	180 to 250	N320TC to N360TC	82,300	86,700	35,800	4,425,375
	318ML4	1059	1.7	2,298,600	70	180 to 250	N320TC to N360TC	84,100	88,500	37,700	4,425,375
1200	318ML3	76.5	15.7	1,805,800	268	200 to 250	—	63,000	66,300	18,000	4,425,375
	318ML3	98.2	12.2	1,901,200	268	200 to 250	—	67,900	71,500	19,500	4,425,375
	318ML3	117	10.3	1,969,700	268	200 to 250	—	71,400	75,200	20,700	4,425,375
	318ML3	123	9.7	1,984,300	268	200 to 250	—	72,100	75,900	21,100	4,425,375
	318ML3	146	8.2	2,001,200	268	200 to 250	—	72,100	75,900	22,300	4,425,375
	318ML3	170	7.1	2,016,200	247	200 to 250	—	72,100	75,900	23,400	4,425,375
	318ML4	262	4.6	2,081,900	154	180 to 250	N320TC to N360TC	73,000	76,900	27,100	4,425,375
	318ML4	313	3.8	2,145,000	147	180 to 250	N320TC to N360TC	74,900	78,800	28,700	4,425,375
	318ML4	337	3.6	2,171,600	139	180 to 250	N320TC to N360TC	75,600	79,700	29,400	4,425,375
	318ML4	402	3.0	2,237,400	120	180 to 250	N320TC to N360TC	77,600	81,700	31,200	4,425,375
	318ML4	422	2.8	2,256,500	115	180 to 250	N320TC to N360TC	78,100	82,300	31,700	4,425,375
	318ML4	477	2.5	2,303,100	104	180 to 250	N320TC to N360TC	79,500	83,700	33,100	4,425,375
	318ML4	515	2.3	2,329,700	97	180 to 250	N320TC to N360TC	80,400	84,700	33,900	4,425,375
	318ML4	612	2.0	2,388,300	84	180 to 250	N320TC to N360TC	82,400	86,700	35,900	4,425,375
	318ML4	647	1.9	2,407,700	80	180 to 250	N320TC to N360TC	83,000	87,400	36,600	4,425,375
	318ML4	726	1.7	2,448,400	73	180 to 250	N320TC to N360TC	84,400	88,900	38,000	4,425,375
	318ML4	768	1.6	2,468,300	69	180 to 250	N320TC to N360TC	85,100	89,600	38,700	4,425,375
	318ML4	911	1.3	2,530,400	60	180 to 250	N320TC to N360TC	87,200	91,800	41,000	4,425,375
	318ML4	1059	1.1	2,332,300	47	180 to 250	N320TC to N360TC	89,100	93,800	43,100	4,425,375

319 L

495

4,170,380 lb•in

n_1 rpm		i	n_2 rpm	T_{n2} lb•in	P_{n1} hp	P (IEC)	NEMA	Rn_2 [lbs] HC/PC	HZ/PZ	FZ	$T_{n2\ max}$ lb•in
1800	319L3	84.8	21.2	1,788,300	268	200 to 250	—	65,200	71,700	16,200	6,018,510
	319L3	100	17.9	1,851,100	268	200 to 250	—	68,500	75,500	17,200	6,018,510
	319L3	109	16.5	1,927,300	268	200 to 250	—	70,200	77,300	17,600	6,018,510
	319L3	126	14.3	1,981,600	268	200 to 250	—	73,400	80,800	18,500	6,018,510
	319L3	129	13.9	2,028,900	268	200 to 250	—	73,900	81,400	18,700	6,018,510
	319L3	137	13.2	2,063,200	268	200 to 250	—	75,200	82,800	19,000	6,018,510
	319L3	162	11.1	2,135,500	268	200 to 250	—	79,100	87,100	20,100	6,018,510
	319L3	188	9.6	2,258,500	268	200 to 250	—	81,700	89,900	21,200	6,018,510
	319L3	192	9.4	2,223,900	268	200 to 250	—	81,700	89,900	21,300	6,018,510
	319L3	223	8.1	2,267,300	268	200 to 250	—	81,700	89,900	22,400	6,018,510
	319L4	291	6.2	2,588,200	154	180 to 250	N320TC to N360TC	81,700	89,900	24,500	6,018,510
	319L4	347	5.2	2,729,000	154	180 to 250	N320TC to N360TC	81,700	89,900	26,000	6,018,510
	319L4	410	4.4	2,464,400	154	180 to 250	N320TC to N360TC	83,200	91,600	27,500	6,018,510
	319L4	445	4.0	2,941,100	154	180 to 250	N320TC to N360TC	84,200	92,700	28,200	6,018,510
	319L4	515	3.5	2,559,600	154	180 to 250	N320TC to N360TC	86,000	94,600	29,600	6,018,510
	319L4	528	3.4	3,096,100	154	180 to 250	N320TC to N360TC	86,300	95,000	29,900	6,018,510
	319L4	558	3.2	3,148,400	154	180 to 250	N320TC to N360TC	87,000	95,700	30,400	6,018,510
	319L4	571	3.2	3,169,600	154	180 to 250	N320TC to N360TC	87,200	96,100	30,700	6,018,510
	319L4	625	2.9	2,643,700	136	180 to 250	N320TC to N360TC	88,400	97,300	31,600	6,018,510
	319L4	678	2.7	3,336,700	154	180 to 250	N320TC to N360TC	89,400	98,400	32,500	6,018,510
	319L4	717	2.5	3,393,000	153	180 to 250	N320TC to N360TC	90,100	99,200	33,100	6,018,510

319 L

495

4,170,380 lb•in

n_1 rpm		i	n_2 rpm	T_{n2} lb•in	P_{n1} hp	P (IEC)	NEMA	Rn_2 [lbs] HC/PC	HZ/PZ	FZ	$T_{n2\ max}$ lb•in
1800	319L4	802	2.2	2,755,900	111	180 to 250	N320TC to N360TC	91,600	100,800	34,300	6,018,510
	319L4	850	2.1	3,481,300	132	180 to 250	N320TC to N360TC	92,300	101,700	35,000	6,018,510
	319L4	912	2.0	2,774,200	98	180 to 250	N320TC to N360TC	93,300	102,700	35,800	6,018,510
	319L4	1007	1.8	2,862,200	92	180 to 250	N320TC to N360TC	94,600	104,200	37,000	6,018,510
	319L4	1195	1.5	2,945,000	80	180 to 250	N320TC to N360TC	96,900	106,700	39,200	6,018,510
	319L4	1389	1.3	2,898,300	67	180 to 250	N320TC to N360TC	99,000	109,100	41,200	6,018,510
1200	319L3	84.8	14.2	2,019,700	268	200 to 250	—	73,600	81,000	18,600	6,018,510
	319L3	100	12.0	2,090,500	268	200 to 250	—	77,400	85,200	19,700	6,018,510
	319L3	109	11.0	2,176,600	268	200 to 250	—	79,300	87,300	20,200	6,018,510
	319L3	126	9.5	2,219,600	268	200 to 250	—	81,700	89,900	21,200	6,018,510
	319L3	129	9.3	2,291,400	268	200 to 250	—	81,700	89,900	21,400	6,018,510
	319L3	137	8.8	2,330,100	268	200 to 250	—	81,700	89,900	21,800	6,018,510
	319L3	162	7.4	2,291,700	268	200 to 250	—	81,700	89,900	23,000	6,018,510
	319L3	188	6.4	2,414,900	267	200 to 250	—	81,700	89,900	24,300	6,018,510
	319L3	192	6.3	2,342,700	255	200 to 250	—	81,700	89,900	24,400	6,018,510
	319L3	223	5.4	2,388,400	224	200 to 250	—	81,700	89,900	25,700	6,018,510
	319L4	291	4.1	2,922,900	154	180 to 250	N320TC to N360TC	83,900	92,400	28,000	6,018,510
	319L4	347	3.5	3,082,000	154	180 to 250	N320TC to N360TC	86,100	94,800	29,700	6,018,510
	319L4	410	2.9	2,636,900	138	180 to 250	N320TC to N360TC	88,200	97,100	31,400	6,018,510
	319L4	445	2.7	3,321,500	154	180 to 250	N320TC to N360TC	89,200	98,200	32,300	6,018,510
	319L4	515	2.3	2,738,700	114	180 to 250	N320TC to N360TC	91,100	100,300	33,900	6,018,510
	319L4	528	2.3	3,418,100	139	180 to 250	N320TC to N360TC	91,400	100,600	34,200	6,018,510
	319L4	558	2.1	3,514,700	135	180 to 250	N320TC to N360TC	92,100	101,500	34,800	6,018,510
	319L4	571	2.1	3,491,300	131	180 to 250	N320TC to N360TC	92,400	101,800	35,100	6,018,510
	319L4	625	1.9	2,828,500	97	180 to 250	N320TC to N360TC	93,600	103,100	36,200	6,018,510
	319L4	678	1.8	3,555,400	113	180 to 250	N320TC to N360TC	94,700	104,300	37,200	6,018,510
	319L4	717	1.7	3,716,300	112	180 to 250	N320TC to N360TC	95,500	105,100	37,900	6,018,510
	319L4	802	1.5	2,948,500	79	180 to 250	N320TC to N360TC	97,000	106,800	39,300	6,018,510
	319L4	850	1.4	3,693,200	93	180 to 250	N320TC to N360TC	97,900	107,700	40,100	6,018,510
	319L4	912	1.3	2,893,700	68	180 to 250	N320TC to N360TC	98,800	108,800	41,000	6,018,510
	319L4	1007	1.2	3,062,200	65	180 to 250	N320TC to N360TC	100,200	110,400	42,400	6,018,510
	319L4	1195	1.0	3,150,900	57	180 to 250	N320TC to N360TC	102,700	113,100	44,900	6,018,510
	319L4	1389	0.86	2,977,700	46	180 to 250	N320TC to N360TC	105,000	115,600	45,000	6,018,510

321 L

507

5,803,790 lb•in

n_1 rpm		i	n_2 rpm	T_{n2} lb•in	P_{n1} hp	P (IEC)	NEMA	Rn_2 [lbs] HC/PC	HZ/PZ	FZ	$T_{n2\ max}$ lb•in
1800	321L4	258	7.0	3,366,100	201	180 to 250	N320TC to N360TC	115,500	137,500	150,700	8,266,601
	321L4	308	5.8	3,549,300	201	180 to 250	N320TC to N360TC	115,500	137,500	158,900	8,266,601
	321L4	395	4.6	3,825,100	201	180 to 250	N320TC to N360TC	117,100	139,400	171,200	8,266,601
	321L4	469	3.8	4,026,800	201	180 to 250	N320TC to N360TC	120,000	142,800	180,200	8,266,601
	321L4	515	3.5	4,141,600	201	180 to 250	N320TC to N360TC	121,600	144,800	185,400	8,266,601
	321L4	612	2.9	4,360,000	201	180 to 250	N320TC to N360TC	124,600	148,300	195,200	8,266,601
	321L4	736	2.4	4,605,100	201	180 to 250	N320TC to N360TC	128,000	152,300	206,300	8,266,601
	321L4	796	2.3	4,699,300	190	180 to 250	N320TC to N360TC	129,400	154,000	211,200	8,266,601
	321L4	945	1.9	4,912,300	168	180 to 250	N320TC to N360TC	132,600	157,800	222,400	8,266,601
	321L4	1122	1.6	4,659,200	134	180 to 250	N320TC to N360TC	135,900	161,800	234,100	8,266,601
1200	321L3	75.3	15.9	2,626,800	335	—	—	100,500	119,600	117,600	8,266,601
	321L3	98.2	12.2	2,844,200	335	—	—	108,800	129,500	127,300	8,266,601
	321L3	118	10.2	3,006,900	335	—	—	115,000	136,900	134,600	8,266,601
	321L3	126	9.5	3,065,200	335	—	—	115,500	137,500	137,200	8,266,601
	321L3	152	7.9	3,240,500	335	—	—	115,500	137,500	145,000	8,266,601
	321L3	180	6.7	3,411,400	335	—	—	115,500	137,500	152,700	8,266,601
	321L4	258	4.6	3,801,500	201	180 to 250	N320TC to N360TC	116,700	139,000	170,200	8,266,601
	321L4	308	3.9	4,008,400	201	180 to 250	N320TC to N360TC	119,700	142,500	179,400	8,266,601
	321L4	395	3.0	4,319,900	201	180 to 250	N320TC to N360TC	124,100	147,700	193,400	8,266,601
	321L4	469	2.6	4,547,600	201	180 to 250	N320TC to N360TC	127,100	151,300	203,600	8,266,601
	321L4	515	2.3	4,663,600	195	180 to 250	N320TC to N360TC	128,900	153,400	209,400	8,266,601
	321L4	612	2.0	4,875,000	171	180 to 250	N320TC to N360TC	132,100	157,200	220,400	8,266,601
	321L4	736	1.6	5,114,700	149	180 to 250	N320TC to N360TC	135,600	161,400	233,000	8,266,601
	321L4	796	1.5	5,219,200	141	180 to 250	N320TC to N360TC	137,100	163,200	238,500	8,266,601

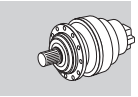

321 L — 507 — 5,803,790 lb•in

n_1 rpm		i	n_2 rpm	T_{n2} lb•in	P_{n1} hp	P (IEC)	NEMA	Rn_2 [lbs] HC/PC	HZ/PZ	FZ	$T_{n2\ max}$ lb•in
1200	321L4	945	1.3	5,455,800	124	180 to 250	N320TC to N360TC	140,500	167,300	251,100	8,266,601
	321L4	1122	1.1	4,734,400	91	180 to 250	N320TC to N360TC	144,000	171,400	264,400	8,266,601

323 L — 519 — 7,879,910 lb•in

n_1 rpm		i	n_2 rpm	T_{n2} lb•in	P_{n1} hp	P (IEC)	NEMA	Rn_2 [lbs] HC/PC	HZ/PZ	FZ	$T_{n2\ max}$ lb•in
1800	323L4	341	5.3	6,461,500	268	200 to 250	N400TC	—	—	150,100	13,984,185
	323L4	390	4.6	6,652,800	268	200 to 250	N400TC	—	—	156,300	13,984,185
	323L4	438	4.1	6,777,900	268	200 to 250	N400TC	—	—	161,800	13,984,185
	323L4	500	3.6	6,926,300	268	200 to 250	N400TC	—	—	168,400	13,984,185
	323L4	569	3.2	7,071,200	268	200 to 250	N400TC	—	—	175,000	13,984,185
	323L4	628	2.9	7,185,000	268	200 to 250	N400TC	—	—	180,300	13,984,185
	323L4	703	2.6	7,316,900	268	200 to 250	N400TC	—	—	186,500	13,984,185
	323L4	758	2.4	7,374,300	268	200 to 250	N400TC	—	—	190,700	13,984,185
	323L4	882	2.0	7,460,700	268	200 to 250	N400TC	—	—	199,600	13,984,185
	323L4	1025	1.8	7,547,200	237	200 to 250	N400TC	—	—	208,900	13,984,185
	323L4	1101	1.6	7,588,400	222	200 to 250	N400TC	—	—	213,400	13,984,185
	323L4	1279	1.4	7,676,500	194	200 to 250	N400TC	—	—	223,200	13,984,185
1200	323L4	341	3.5	6,950,900	268	200 to 250	N400TC	—	—	169,500	13,984,185
	323L4	390	3.1	7,103,000	268	200 to 250	N400TC	—	—	176,500	13,984,185
	323L4	438	2.7	7,236,600	268	200 to 250	N400TC	—	—	182,700	13,984,185
	323L4	500	2.4	7,369,000	268	200 to 250	N400TC	—	—	190,200	13,984,185
	323L4	569	2.1	7,441,700	268	200 to 250	N400TC	—	—	197,700	13,984,185
	323L4	628	1.9	7,498,400	257	200 to 250	N400TC	—	—	203,600	13,984,185
	323L4	703	1.7	7,563,300	231	200 to 250	N400TC	—	—	210,600	13,984,185
	323L4	758	1.6	7,607,000	216	200 to 250	N400TC	—	—	215,400	13,984,185
	323L4	882	1.4	7,696,100	188	200 to 250	N400TC	—	—	225,500	13,984,185
	323L4	1025	1.2	7,785,400	163	200 to 250	N400TC	—	—	235,900	13,984,185
	323L4	1101	1.1	7,827,900	153	200 to 250	N400TC	—	—	241,000	13,984,185
	323L4	1279	0.94	7,879,900	132	200 to 250	N400TC	—	—	247,300	13,984,185

325 L — 523 — 11,388,260 lb•in

n_1 rpm		i	n_2 rpm	T_{n2} lb•in	P_{n1} hp	P (IEC)	NEMA	Rn_2 [lbs] HC/PC	HZ/PZ	FZ	$T_{n2\ max}$ lb•in
1800	325L4	341	5.3	7,808,600	268	200 to 250	N400TC	—	—	191,100	17,701,500
	325L4	390	4.6	7,979,700	268	200 to 250	N400TC	—	—	198,900	17,701,500
	325L4	438	4.1	8,415,500	268	200 to 250	N400TC	—	—	205,900	17,701,500
	325L4	500	3.6	8,599,800	268	200 to 250	N400TC	—	—	214,400	17,701,500
	325L4	569	3.2	8,936,900	268	200 to 250	N400TC	—	—	222,800	17,701,500
	325L4	628	2.9	9,206,000	268	200 to 250	N400TC	—	—	229,500	17,701,500
	325L4	703	2.6	9,370,300	268	200 to 250	N400TC	—	—	237,400	17,701,500
	325L4	758	2.4	9,855,000	268	200 to 250	N400TC	—	—	242,800	17,701,500
	325L4	882	2.0	9,839,300	268	200 to 250	N400TC	—	—	254,100	17,701,500
	325L4	1025	1.8	10,147,600	268	200 to 250	N400TC	—	—	265,800	17,701,500
	325L4	1101	1.6	8,524,800	250	200 to 250	N400TC	—	—	271,500	17,701,500
	325L4	1279	1.4	8,524,800	215	200 to 250	N400TC	—	—	284,100	17,701,500
1200	325L4	341	3.5	8,818,700	268	200 to 250	N400TC	—	—	215,800	17,701,500
	325L4	390	3.1	9,011,900	268	200 to 250	N400TC	—	—	224,600	17,701,500
	325L4	438	2.7	9,504,000	268	200 to 250	N400TC	—	—	232,500	17,701,500
	325L4	500	2.4	9,666,800	268	200 to 250	N400TC	—	—	242,100	17,701,500
	325L4	569	2.1	9,901,800	268	200 to 250	N400TC	—	—	251,600	17,701,500
	325L4	628	1.9	10,086,900	268	200 to 250	N400TC	—	—	259,200	17,701,500
	325L4	703	1.7	10,205,600	268	200 to 250	N400TC	—	—	268,100	17,701,500
	325L4	758	1.6	10,545,400	268	200 to 250	N400TC	—	—	274,200	17,701,500
	325L4	882	1.4	10,691,700	261	200 to 250	N400TC	—	—	287,000	17,701,500
	325L4	1025	1.2	11,026,700	231	200 to 250	N400TC	—	—	300,200	17,701,500
	325L4	1101	1.1	8,524,800	167	200 to 250	N400TC	—	—	306,700	17,701,500
	325L4	1279	0.94	8,524,800	143	200 to 250	N400TC	—	—	314,700	17,701,500

25.4 RATING CHARTS FOR RIGHT ANGLE UNITS 300M R

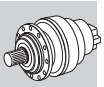

Reading the rating chart.

311M R	393	435,550 lb•in

n_1 rpm		i	n_2 rpm	T_{n2} lb•in	P_{n1} hp	P (IEC)	NEMA	Rn_2 [lbs] NHC/NPC	HZ/PZ	FZ	$T_{n2\ max}$ lb•in
1800	**311MR2B**	12.0	**150**	99,300	201	180 to 250	N320TC to N360TC	9,560	12,500	2,750	515,999
	311MR2B	15.4	**117**	127,500	201	180 to 250	N320TC to N360TC	10,300	13,400	2,990	515,999
	311MR2B	18.3	**98**	151,400	201	180 to 250	N320TC to N360TC	10,800	14,200	3,170	515,999
	311MR2C	16.6	**108**	125,400	201	180 to 250	N320TC to N360TC	10,500	13,800	3,070	515,999
	311MR2C	21.3	**84**	161,000	201	180 to 250	N320TC to N360TC	11,400	14,800	3,330	515,999

The rated torque of the gearbox, independent of installed mechanical power

1	Reference torque
2	Gearbox drive speed
3	Frame size of the right-angle gear unit. NOTE: letters (B) (C) near size indication identify different angle reduction dimensions. See dimensions pages.
4	Gear ratio
5	Gearbox output speed
6	Gearbox rated output torque based on: - service factor f_S=1 - 10000 h theoretical lifetime
7	Gearbox rated input power, based on: - service factor f_S=1 - 10000 h theoretical lifetime
8	Frame size of available IEC motor
9	Frame size of available NEMA motor
10	Permitted overhung loading on output shaft, based on: - service factor f_S=1 - 10000 h theoretical lifetime - speed of output n_2 For forces not applied at shaft middlepoint, see diagrams provided in the specific gearbox overall dimensioning pages
11	Maximum torque
12	Dimensions page

Bonfiglioli Riduttori

300 R	237	11,060 lb•in

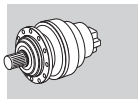

n_1 rpm		i	n_2 rpm	T_{n2} lb•in	P_{n1} hp	P (IEC)	NEMA	Rn_2 [lbs] NHC/NPC	HZ/PZ	FZ	$T_{n2\ max}$ lb•in
1800	**300R2**	**7.13**	252	4,890	20.1	71 to 132	N56C to N280TC	1,690	2,130	280	17,702
	300R2	**8.74**	206	5,130	17.8	71 to 132	N56C to N280TC	1,800	2,270	300	21,242
	300R2	**11.8**	152	4,920	12.6	71 to 132	N56C to N280TC	1,970	2,480	340	21,242
	300R2	**14.8**	122	4,250	8.7	71 to 132	N56C to N280TC	2,100	2,650	360	21,242
	300R2	**18.5**	98	3,270	5.4	71 to 132	N56C to N280TC	2,250	2,840	390	21,242
	300R3	**24.8**	73	6,460	8.1	71 to 132	N56C to N280TC	2,460	3,100	430	17,702
	300R3	**30.4**	59	7,160	7.4	71 to 132	N56C to N280TC	2,610	3,300	460	21,242
	300R3	**37.3**	48	7,440	6.2	71 to 132	N56C to N280TC	2,770	3,500	490	21,242
	300R3	**41.2**	44	5,750	4.4	71 to 132	N56C to N280TC	2,860	3,610	510	21,242
	300R3	**50.4**	36	7,470	4.6	71 to 132	N56C to N280TC	3,040	3,840	550	21,242
	300R3	**62.9**	28.6	7,500	3.7	71 to 132	N56C to N280TC	3,250	4,100	590	21,242
	300R3	**68.2**	26.4	5,750	2.6	71 to 132	N56C to N280TC	3,330	4,200	600	21,242
	300R3	**78.7**	22.9	7,520	3.0	71 to 132	N56C to N280TC	3,470	4,380	630	21,242
	300R3	**85.2**	21.1	5,750	2.1	71 to 132	N56C to N280TC	3,560	4,490	650	21,242
	300R3	**106**	16.9	5,750	1.7	71 to 132	N56C to N280TC	3,800	4,800	700	21,242
	300R3	**133**	13.6	4,870	1.1	71 to 132	N56C to N280TC	4,060	5,130	750	21,242
	300R4	**106**	17.0	7,550	2.3	71 to 132	N56C to N280TC	3,800	4,790	700	21,242
	300R4	**130**	13.9	7,580	1.9	71 to 132	N56C to N280TC	4,030	5,090	750	21,242
	300R4	**143**	12.6	5,750	1.3	71 to 132	N56C to N280TC	4,160	5,250	770	21,242
	300R4	**159**	11.3	7,600	1.5	71 to 132	N56C to N280TC	4,290	5,410	800	21,242
	300R4	**175**	10.3	7,610	1.4	71 to 132	N56C to N280TC	4,420	5,580	830	21,242
	300R4	**215**	8.4	7,810	1.2	71 to 132	N56C to N280TC	4,450	5,620	890	21,242
	300R4	**237**	7.6	5,750	0.78	71 to 132	N56C to N280TC	4,450	5,620	920	21,242
	300R4	**268**	6.7	8,060	0.97	71 to 132	N56C to N280TC	4,450	5,620	950	21,242
	300R4	**291**	6.2	8,150	0.90	71 to 132	N56C to N280TC	4,450	5,620	980	21,242
	300R4	**363**	5.0	8,420	0.75	71 to 132	N56C to N280TC	4,460	5,630	1,050	21,242
	300R4	**394**	4.6	5,840	0.48	71 to 132	N56C to N280TC	4,510	5,690	1,080	21,242
	300R4	**453**	4.0	8,750	0.62	71 to 132	N56C to N280TC	4,600	5,810	1,140	21,242
	300R4	**491**	3.7	6,060	0.40	71 to 132	N56C to N280TC	4,650	5,880	1,170	21,242
	300R4	**613**	2.9	6,290	0.33	71 to 132	N56C to N280TC	4,800	6,060	1,260	21,242
	300R4	**766**	2.3	6,530	0.28	71 to 132	N56C to N280TC	4,960	6,260	1,350	21,242
1200	**300R2**	**7.13**	168	5,530	15.7	71 to 132	N56C to N280TC	1,910	2,410	330	17,702
	300R2	**8.74**	137	5,790	13.4	71 to 132	N56C to N280TC	2,030	2,560	350	21,242
	300R2	**11.8**	101	5,550	9.5	71 to 132	N56C to N280TC	2,220	2,800	390	21,242
	300R2	**14.8**	81	4,620	6.3	71 to 132	N56C to N280TC	2,370	3,000	420	21,242
	300R2	**18.5**	65	3,270	3.6	71 to 132	N56C to N280TC	2,540	3,200	450	21,242
	300R3	**24.8**	48	6,460	5.4	71 to 132	N56C to N280TC	2,770	3,500	490	17,702
	300R3	**30.4**	39	7,460	5.1	71 to 132	N56C to N280TC	2,950	3,720	530	21,242
	300R3	**37.3**	32	7,480	4.2	71 to 132	N56C to N280TC	3,130	3,960	570	21,242
	300R3	**41.2**	29.2	5,750	2.9	71 to 132	N56C to N280TC	3,230	4,080	580	21,242
	300R3	**50.4**	23.8	7,520	3.1	71 to 132	N56C to N280TC	3,430	4,330	630	21,242
	300R3	**62.9**	19.1	7,540	2.5	71 to 132	N56C to N280TC	3,670	4,630	670	21,242
	300R3	**68.2**	17.6	5,750	1.8	71 to 132	N56C to N280TC	3,760	4,740	690	21,242
	300R3	**78.7**	15.3	7,560	2.0	71 to 132	N56C to N280TC	3,920	4,950	730	21,242
	300R3	**85.2**	14.1	5,750	1.4	71 to 132	N56C to N280TC	4,020	5,070	740	21,242
	300R3	**106**	11.3	5,750	1.1	71 to 132	N56C to N280TC	4,290	5,420	800	21,242
	300R3	**133**	9.0	4,870	0.76	71 to 132	N56C to N280TC	4,450	5,620	860	21,242
	300R4	**106**	11.3	7,600	1.5	71 to 132	N56C to N280TC	4,290	5,410	800	21,242
	300R4	**130**	9.3	7,700	1.3	71 to 132	N56C to N280TC	4,450	5,620	860	21,242
	300R4	**143**	8.4	5,750	0.86	71 to 132	N56C to N280TC	4,450	5,620	890	21,242
	300R4	**159**	7.6	7,920	1.1	71 to 132	N56C to N280TC	4,450	5,620	920	21,242
	300R4	**175**	6.8	8,040	0.99	71 to 132	N56C to N280TC	4,450	5,620	950	21,242

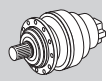

B

300 R

237

11,060 lb•in

n_1 rpm		i	n_2 rpm	T_{n2} lb•in	P_{n1} hp	P (IEC)	NEMA	Rn_2 [lbs] NHC/NPC	HZ/PZ	FZ	$T_{n2\ max}$ lb•in
1200	**300R4**	**215**	5.6	8,280	0.83	71 to 132	N56C to N280TC	4,450	5,620	1,010	21,242
	300R4	**237**	5.1	5,750	0.52	71 to 132	N56C to N280TC	4,450	5,620	1,050	21,242
	300R4	**268**	4.5	8,570	0.69	71 to 132	N56C to N280TC	4,520	5,710	1,090	21,242
	300R4	**291**	4.1	8,690	0.64	71 to 132	N56C to N280TC	4,580	5,780	1,120	21,242
	300R4	**363**	3.3	9,030	0.53	71 to 132	N56C to N280TC	4,720	5,960	1,210	21,242
	300R4	**394**	3.0	6,250	0.34	71 to 132	N56C to N280TC	4,780	6,030	1,240	21,242
	300R4	**453**	2.6	9,380	0.45	71 to 132	N56C to N280TC	4,870	6,150	1,300	21,242
	300R4	**491**	2.4	6,490	0.28	71 to 132	N56C to N280TC	4,930	6,230	1,340	21,242
	300R4	**613**	2.0	6,750	0.24	71 to 132	N56C to N280TC	5,090	6,430	1,440	21,242
	300R4	**766**	1.6	7,030	0.20	71 to 132	N56C to N280TC	5,250	6,630	1,550	21,242

301 R

253

21,770 lb•in

n_1 rpm		i	n_2 rpm	T_{n2} lb•in	P_{n1} hp	P (IEC)	NEMA	Rn_2 [lbs] NHC/NPC	HZ/PZ	FZ	$T_{n2\ max}$ lb•in
1800	**301R2**	**7.13**	252	8,720	20.1	71 to 132	N56C to N280TC	1,690	2,010	280	30,093
	301R2	**8.74**	206	9,120	20.1	71 to 132	N56C to N280TC	1,800	2,130	300	30,093
	301R2	**11.8**	152	9,680	20.1	71 to 132	N56C to N280TC	1,970	2,330	340	30,093
	301R2	**14.8**	122	7,840	16.1	71 to 132	N56C to N280TC	2,100	2,490	360	30,093
	301R2	**18.5**	98	6,550	10.8	71 to 132	N56C to N280TC	2,250	2,670	390	30,093
	301R3	**24.8**	73	12,000	15.2	71 to 132	N56C to N280TC	2,460	2,920	430	30,093
	301R3	**30.4**	59	13,300	13.7	71 to 132	N56C to N280TC	2,610	3,100	460	30,093
	301R3	**37.3**	48	14,000	11.8	71 to 132	N56C to N280TC	2,770	3,290	490	30,093
	301R3	**41.2**	44	11,500	8.7	71 to 132	N56C to N280TC	2,860	3,390	510	30,093
	301R3	**50.4**	36	14,300	8.8	71 to 132	N56C to N280TC	3,040	3,610	550	30,093
	301R3	**62.9**	28.6	14,400	7.2	71 to 132	N56C to N280TC	3,250	3,850	590	30,093
	301R3	**68.2**	26.4	11,500	5.3	71 to 132	N56C to N280TC	3,330	3,950	600	30,093
	301R3	**78.7**	22.9	13,800	5.5	71 to 132	N56C to N280TC	3,470	4,120	630	30,093
	301R3	**85.2**	21.1	11,500	4.2	71 to 132	N56C to N280TC	3,560	4,220	650	30,093
	301R3	**106**	16.9	11,500	3.4	71 to 132	N56C to N280TC	3,800	4,510	700	30,093
	301R3	**133**	13.6	10,200	2.4	71 to 132	N56C to N280TC	4,060	4,820	750	30,093
	301R4	**106**	17.0	14,900	4.5	71 to 132	N56C to N280TC	3,800	4,500	700	30,093
	301R4	**130**	13.9	15,000	3.7	71 to 132	N56C to N280TC	4,030	4,790	750	30,093
	301R4	**143**	12.6	11,500	2.6	71 to 132	N56C to N280TC	4,160	4,930	770	30,093
	301R4	**159**	11.3	15,200	3.1	71 to 132	N56C to N280TC	4,290	5,090	800	30,093
	301R4	**175**	10.3	15,300	2.8	71 to 132	N56C to N280TC	4,420	5,240	830	30,093
	301R4	**215**	8.4	15,700	2.4	71 to 132	N56C to N280TC	4,450	5,280	890	30,093
	301R4	**237**	7.6	11,500	1.6	71 to 132	N56C to N280TC	4,450	5,280	920	30,093
	301R4	**268**	6.7	16,200	1.9	71 to 132	N56C to N280TC	4,450	5,280	950	30,093
	301R4	**291**	6.2	16,300	1.8	71 to 132	N56C to N280TC	4,450	5,280	980	30,093
	301R4	**363**	5.0	16,800	1.5	71 to 132	N56C to N280TC	4,460	5,290	1,050	30,093
	301R4	**394**	4.6	11,700	0.96	71 to 132	N56C to N280TC	4,510	5,350	1,080	30,093
	301R4	**453**	4.0	16,700	1.2	71 to 132	N56C to N280TC	4,600	5,460	1,140	30,093
	301R4	**491**	3.7	12,100	0.80	71 to 132	N56C to N280TC	4,650	5,520	1,170	30,093
	301R4	**613**	2.9	12,600	0.66	71 to 132	N56C to N280TC	4,800	5,700	1,260	30,093
	301R4	**766**	2.3	13,100	0.55	71 to 132	N56C to N280TC	4,960	5,890	1,350	30,093
1200	**301R2**	**7.13**	168	9,840	20.1	71 to 132	N56C to N280TC	1,910	2,270	330	30,093
	301R2	**8.74**	137	10,300	20.1	71 to 132	N56C to N280TC	2,030	2,410	350	30,093
	301R2	**11.8**	101	10,900	18.7	71 to 132	N56C to N280TC	2,220	2,640	390	30,093
	301R2	**14.8**	81	8,840	12.1	71 to 132	N56C to N280TC	2,370	2,820	420	30,093
	301R2	**18.5**	65	6,550	7.2	71 to 132	N56C to N280TC	2,540	3,010	450	30,093

Bonfiglioli Riduttori

301 R

253

21,770 lb•in

n_1 rpm		i	n_2 rpm	T_{n2} lb•in	P_{n1} hp	P (IEC)	NEMA	Rn_2 [lbs] NHC/NPC	HZ/PZ	FZ	$T_{n2\ max}$ lb•in
1200	**301R3**	**24.8**	48	12,700	10.6	71 to 132	N56C to N280TC	2,770	3,290	490	30,093
	301R3	**30.4**	39	14,200	9.7	71 to 132	N56C to N280TC	2,950	3,500	530	30,093
	301R3	**37.3**	32	14,300	8.0	71 to 132	N56C to N280TC	3,130	3,720	570	30,093
	301R3	**41.2**	29.2	11,500	5.8	71 to 132	N56C to N280TC	3,230	3,830	580	30,093
	301R3	**50.4**	23.8	14,600	6.0	71 to 132	N56C to N280TC	3,430	4,070	630	30,093
	301R3	**62.9**	19.1	14,800	4.9	71 to 132	N56C to N280TC	3,670	4,350	670	30,093
	301R3	**68.2**	17.6	11,500	3.5	71 to 132	N56C to N280TC	3,760	4,460	690	30,093
	301R3	**78.7**	15.3	14,000	3.7	71 to 132	N56C to N280TC	3,920	4,650	730	30,093
	301R3	**85.2**	14.1	11,500	2.8	71 to 132	N56C to N280TC	4,020	4,770	740	30,093
	301R3	**106**	11.3	11,500	2.3	71 to 132	N56C to N280TC	4,290	5,100	800	30,093
	301R3	**133**	9	10,200	1.6	71 to 132	N56C to N280TC	4,450	5,280	860	30,093
	301R4	**106**	11.3	15,200	3.1	71 to 132	N56C to N280TC	4,290	5,090	800	30,093
	301R4	**130**	9.3	15,500	2.6	71 to 132	N56C to N280TC	4,450	5,280	860	30,093
	301R4	**143**	8.4	11,500	1.7	71 to 132	N56C to N280TC	4,450	5,280	890	30,093
	301R4	**159**	7.6	15,900	2.2	71 to 132	N56C to N280TC	4,450	5,280	920	30,093
	301R4	**175**	6.8	16,100	2.0	71 to 132	N56C to N280TC	4,450	5,280	950	30,093
	301R4	**215**	5.6	16,600	1.7	71 to 132	N56C to N280TC	4,450	5,280	1,010	30,093
	301R4	**237**	5.1	11,500	1.0	71 to 132	N56C to N280TC	4,450	5,280	1,050	30,093
	301R4	**268**	4.5	17,100	1.4	71 to 132	N56C to N280TC	4,520	5,370	1,090	30,093
	301R4	**291**	4.1	17,400	1.3	71 to 132	N56C to N280TC	4,580	5,430	1,120	30,093
	301R4	**363**	3.3	18,100	1.1	71 to 132	N56C to N280TC	4,720	5,600	1,210	30,093
	301R4	**394**	3.0	12,500	0.68	71 to 132	N56C to N280TC	4,780	5,670	1,240	30,093
	301R4	**453**	2.6	17,600	0.83	71 to 132	N56C to N280TC	4,870	5,780	1,300	30,093
	301R4	**491**	2.4	13,000	0.57	71 to 132	N56C to N280TC	4,930	5,850	1,340	30,093
	301R4	**613**	2.0	13,500	0.47	71 to 132	N56C to N280TC	5,090	6,040	1,440	30,093
	301R4	**766**	1.6	14,100	0.39	71 to 132	N56C to N280TC	5,250	6,240	1,550	30,093

303 R

269

26,290 lb•in

n_1 rpm		i	n_2 rpm	T_{n2} lb•in	P_{n1} hp	P (IEC)	NEMA	Rn_2 [lbs] NHC/NPC	HZ/PZ	FZ	$T_{n2\ max}$ lb•in
1800	**303R2**	**9.23**	195	14,100	46	71 to 132	N56C to N280TC	3,500	4,430	930	46,024
	303R2	**10.9**	165	15,900	44	71 to 132	N56C to N280TC	3,680	4,650	980	46,024
	303R2	**13.7**	132	16,500	37	71 to 132	N56C to N280TC	3,940	4,980	1,060	46,024
	303R2	**15.9**	113	15,500	29.6	71 to 132	N56C to N280TC	4,120	5,210	1,120	46,024
	303R2	**19.2**	94	13,400	21.2	71 to 132	N56C to N280TC	4,370	5,520	1,190	46,024
	303R2	**24.8**	73	7,610	9.3	71 to 132	N56C to N280TC	4,710	5,950	1,290	46,024
	303R3	**25.7**	70	17,000	20.1	71 to 132	N56C to N280TC	4,760	6,020	1,310	46,024
	303R3	**31.5**	57	17,800	17.7	71 to 132	N56C to N280TC	5,060	6,390	1,400	46,024
	303R3	**37.1**	48	20,800	17.6	71 to 132	N56C to N280TC	5,320	6,720	1,480	46,024
	303R3	**42.6**	42	18,100	13.3	71 to 132	N56C to N280TC	5,540	7,000	1,550	46,024
	303R3	**46.6**	39	19,000	12.8	71 to 132	N56C to N280TC	5,700	7,190	1,600	46,024
	303R3	**50.3**	36	20,800	12.9	71 to 132	N56C to N280TC	5,830	7,360	1,640	46,024
	303R3	**54.2**	33	16,100	9.3	71 to 132	N56C to N280TC	5,960	7,530	1,680	46,024
	303R3	**63.1**	28.5	19,100	9.5	71 to 132	N56C to N280TC	6,240	7,880	1,770	46,024
	303R3	**73.3**	24.5	16,100	6.9	71 to 132	N56C to N280TC	6,530	8,240	1,860	46,024
	303R3	**78.7**	22.9	19,200	7.6	71 to 132	N56C to N280TC	6,670	8,420	1,900	46,024
	303R3	**91.5**	19.7	16,100	5.5	71 to 132	N56C to N280TC	6,970	8,810	2,000	46,024
	303R3	**114**	15.7	16,100	4.4	71 to 132	N56C to N280TC	7,460	9,420	2,150	46,024
	303R4	**129**	13.9	23,000	5.7	71 to 132	N56C to N280TC	7,730	9,770	2,240	46,024
	303R4	**148**	12.1	20,200	4.4	71 to 132	N56C to N280TC	8,060	10,200	2,350	46,024

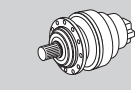

B

303 R	269	26,290 lb•in

n_1 rpm		i	n_2 rpm	T_{n2} lb•in	P_{n1} hp	P (IEC)	NEMA	Rn_2 [lbs] NHC/NPC	HZ/PZ	FZ	$T_{n2\ max}$ lb•in
1800	**303R4**	**158**	11.4	23,200	4.7	71 to 132	N56C to N280TC	8,220	10,400	2,400	46,024
	303R4	**185**	9.7	20,400	3.6	71 to 132	N56C to N280TC	8,540	10,800	2,530	46,024
	303R4	**214**	8.4	23,800	3.6	71 to 132	N56C to N280TC	8,540	10,800	2,650	46,024
	303R4	**231**	7.8	16,200	2.3	71 to 132	N56C to N280TC	8,540	10,800	2,720	46,024
	303R4	**255**	7.1	16,200	2.0	71 to 132	N56C to N280TC	8,540	10,800	2,810	46,024
	303R4	**290**	6.2	23,400	2.6	71 to 132	N56C to N280TC	8,540	10,800	2,940	46,024
	303R4	**313**	5.8	16,200	1.7	71 to 132	N56C to N280TC	8,540	10,800	3,010	46,024
	303R4	**336**	5.4	19,700	1.9	71 to 132	N56C to N280TC	8,540	10,800	3,080	46,024
	303R4	**364**	4.9	19,800	1.8	71 to 132	N56C to N280TC	8,560	10,800	3,170	46,024
	303R4	**390**	4.6	16,500	1.4	71 to 132	N56C to N280TC	8,640	10,900	3,240	46,024
	303R4	**452**	4.0	19,900	1.4	71 to 132	N56C to N280TC	8,820	11,100	3,400	46,024
	303R4	**528**	3.4	17,400	1.1	71 to 132	N56C to N280TC	9,020	11,400	3,580	46,024
	303R4	**567**	3.2	21,000	1.2	71 to 132	N56C to N280TC	9,110	11,500	3,670	46,024
	303R4	**659**	2.7	18,100	0.89	71 to 132	N56C to N280TC	9,310	11,800	3,860	46,024
	303R4	**797**	2.3	15,700	0.64	71 to 132	N56C to N280TC	9,570	12,100	4,110	46,024
	303R4	**824**	2.2	18,800	0.74	71 to 132	N56C to N280TC	9,610	12,100	4,160	46,024
1200	**303R2**	**9.23**	130	15,900	35	71 to 132	N56C to N280TC	3,960	5,000	1,060	46,024
	303R2	**10.9**	110	18,000	33	71 to 132	N56C to N280TC	4,160	5,250	1,130	46,024
	303R2	**13.7**	88	18,100	26.9	71 to 132	N56C to N280TC	4,450	5,620	1,210	46,024
	303R2	**15.9**	76	16,100	20.5	71 to 132	N56C to N280TC	4,660	5,880	1,280	46,024
	303R2	**19.2**	62	14,200	14.9	71 to 132	N56C to N280TC	4,930	6,230	1,360	46,024
	303R2	**24.8**	48	7,610	6.2	71 to 132	N56C to N280TC	5,320	6,720	1,480	46,024
	303R3	**25.7**	47	18,900	15.4	71 to 132	N56C to N280TC	5,380	6,800	1,500	46,024
	303R3	**31.5**	38	18,900	12.5	71 to 132	N56C to N280TC	5,720	7,220	1,600	46,024
	303R3	**37.1**	32	21,500	12.1	71 to 132	N56C to N280TC	6,010	7,590	1,690	46,024
	303R3	**42.6**	28.2	18,500	9.1	71 to 132	N56C to N280TC	6,260	7,910	1,770	46,024
	303R3	**46.6**	25.7	19,200	8.6	71 to 132	N56C to N280TC	6,430	8,130	1,830	46,024
	303R3	**50.3**	23.9	21,500	8.9	71 to 132	N56C to N280TC	6,580	8,310	1,870	46,024
	303R3	**54.2**	22.1	16,100	6.2	71 to 132	N56C to N280TC	6,730	8,500	1,920	46,024
	303R3	**63.1**	19.0	19,300	6.4	71 to 132	N56C to N280TC	7,040	8,900	2,020	46,024
	303R3	**73.3**	16.4	16,100	4.6	71 to 132	N56C to N280TC	7,370	9,310	2,130	46,024
	303R3	**78.7**	15.2	19,300	5.1	71 to 132	N56C to N280TC	7,530	9,510	2,180	46,024
	303R3	**91.5**	13.1	16,100	3.7	71 to 132	N56C to N280TC	7,880	9,950	2,290	46,024
	303R3	**114**	10.5	16,100	2.9	71 to 132	N56C to N280TC	8,420	10,600	2,460	46,024
	303R4	**129**	9.3	23,600	3.9	71 to 132	N56C to N280TC	8,540	10,800	2,570	46,024
	303R4	**148**	8.1	20,400	3.0	71 to 132	N56C to N280TC	8,540	10,800	2,690	46,024
	303R4	**158**	7.6	24,000	3.3	71 to 132	N56C to N280TC	8,540	10,800	2,750	46,024
	303R4	**185**	6.5	20,400	2.4	71 to 132	N56C to N280TC	8,540	10,800	2,890	46,024
	303R4	**214**	5.6	24,600	2.5	71 to 132	N56C to N280TC	8,540	10,800	3,040	46,024
	303R4	**231**	5.2	16,300	1.5	71 to 132	N56C to N280TC	8,540	10,800	3,120	46,024
	303R4	**255**	4.7	16,500	1.4	71 to 132	N56C to N280TC	8,620	10,900	3,220	46,024
	303R4	**290**	4.1	23,600	1.7	71 to 132	N56C to N280TC	8,780	11,100	3,360	46,024
	303R4	**313**	3.8	17,100	1.2	71 to 132	N56C to N280TC	8,870	11,200	3,450	46,024
	303R4	**336**	3.6	20,900	1.3	71 to 132	N56C to N280TC	8,960	11,300	3,530	46,024
	303R4	**364**	3.3	21,200	1.3	71 to 132	N56C to N280TC	9,070	11,500	3,620	46,024
	303R4	**390**	3.1	17,700	0.98	71 to 132	N56C to N280TC	9,160	11,600	3,710	46,024
	303R4	**452**	2.7	19,900	0.95	71 to 132	N56C to N280TC	9,350	11,800	3,900	46,024
	303R4	**528**	2.3	18,700	0.76	71 to 132	N56C to N280TC	9,560	12,100	4,100	46,024
	303R4	**567**	2.1	22,300	0.85	71 to 132	N56C to N280TC	9,660	12,200	4,200	46,024
	303R4	**659**	1.8	19,500	0.63	71 to 132	N56C to N280TC	9,870	12,500	4,420	46,024
	303R4	**797**	1.5	16,700	0.45	71 to 132	N56C to N280TC	10,100	12,800	4,710	46,024
	303R4	**824**	1.5	20,200	0.53	71 to 132	N56C to N280TC	10,200	12,900	4,760	46,024

304 R	287	35,050 lb•in

n_1 rpm		i	n_2 rpm	T_{n2} lb•in	P_{n1} hp	P (IEC)	NEMA	Rn_2 [lbs] NHC/NPC	HZ/PZ	FZ	$T_{n2\ max}$ lb•in
1800	**304R2**	**9.23**	195	14,100	46	71 to 132	N56C to N280TC	3,500	4,430	930	58,415
	304R2	**10.9**	165	16,600	46	71 to 132	N56C to N280TC	3,680	4,650	980	58,415
	304R2	**13.7**	132	20,900	46	71 to 132	N56C to N280TC	3,940	4,980	1,060	58,415
	304R2	**16.8**	107	20,700	37	71 to 132	N56C to N280TC	4,200	5,300	1,140	58,415
	304R3	**25.7**	70	26,200	20.1	71 to 132	N56C to N280TC	4,760	6,020	1,310	64,610
	304R3	**31.5**	57	26,800	20.1	71 to 132	N56C to N280TC	5,060	6,390	1,400	64,610
	304R3	**37.1**	48	30,400	20.1	71 to 132	N56C to N280TC	5,320	6,720	1,480	64,610
	304R3	**42.6**	42	27,900	20.1	71 to 132	N56C to N280TC	5,540	7,000	1,550	64,610
	304R3	**46.6**	39	25,200	16.9	71 to 132	N56C to N280TC	5,700	7,190	1,600	64,610
	304R3	**50.3**	36	30,600	19.0	71 to 132	N56C to N280TC	5,830	7,360	1,640	64,610
	304R3	**63.1**	28.5	25,200	12.5	71 to 132	N56C to N280TC	6,240	7,880	1,770	64,610
	304R3	**78.7**	22.9	25,200	10.0	71 to 132	N56C to N280TC	6,670	8,420	1,900	64,610
	304R3	**97**	18.6	21,200	6.8	71 to 132	N56C to N280TC	7,100	8,960	2,040	64,610
	304R3	**121**	14.8	21,200	5.5	71 to 132	N56C to N280TC	7,590	9,580	2,200	64,610
	304R4	**89.4**	20.1	29,200	10.5	71 to 132	N56C to N280TC	6,920	8,750	1,980	64,610
	304R4	**109**	16.4	29,500	8.7	71 to 132	N56C to N280TC	7,360	9,300	2,120	64,610
	304R4	**129**	13.9	31,100	7.8	71 to 132	N56C to N280TC	7,730	9,770	2,240	64,610
	304R4	**148**	12.1	30,100	6.6	71 to 132	N56C to N280TC	8,060	10,200	2,350	64,610
	304R4	**158**	11.4	31,300	6.4	71 to 132	N56C to N280TC	8,220	10,400	2,400	64,610
	304R4	**185**	9.7	30,500	5.3	71 to 132	N56C to N280TC	8,540	10,800	2,530	64,610
	304R4	**214**	8.4	31,700	4.8	71 to 132	N56C to N280TC	8,540	10,800	2,650	64,610
	304R4	**227**	7.9	30,600	4.4	71 to 132	N56C to N280TC	8,540	10,800	2,700	64,610
	304R4	**267**	6.7	32,100	3.9	71 to 132	N56C to N280TC	8,540	10,800	2,860	64,610
	304R4	**290**	6.2	32,200	3.6	71 to 132	N56C to N280TC	8,540	10,800	2,940	64,610
	304R4	**307**	5.9	30,900	3.2	71 to 132	N56C to N280TC	8,540	10,800	2,990	64,610
	304R4	**338**	5.3	21,200	2.0	71 to 132	N56C to N280TC	8,540	10,800	3,090	64,610
	304R4	**364**	4.9	25,300	2.2	71 to 132	N56C to N280TC	8,560	10,800	3,170	64,610
	304R4	**414**	4.4	21,400	1.7	71 to 132	N56C to N280TC	8,710	11,000	3,300	64,610
	304R4	**452**	4.0	32,500	2.3	71 to 132	N56C to N280TC	8,820	11,100	3,400	64,610
	304R4	**560**	3.2	22,100	1.3	71 to 132	N56C to N280TC	9,100	11,500	3,660	64,610
	304R4	**699**	2.6	22,600	1.0	71 to 132	N56C to N280TC	9,390	11,900	3,940	64,610
1200	**304R2**	**9.23**	130	15,900	35	71 to 132	N56C to N280TC	3,960	5,000	1,060	58,415
	304R2	**10.9**	110	18,700	35	71 to 132	N56C to N280TC	4,160	5,250	1,130	58,415
	304R2	**13.7**	88	23,100	34	71 to 132	N56C to N280TC	4,450	5,620	1,210	58,415
	304R2	**16.8**	71	21,200	25.4	71 to 132	N56C to N280TC	4,740	5,990	1,300	58,415
	304R3	**25.7**	47	27,400	20.1	71 to 132	N56C to N280TC	5,380	6,800	1,500	64,610
	304R3	**31.5**	38	27,800	18.4	71 to 132	N56C to N280TC	5,720	7,220	1,600	64,610
	304R3	**37.1**	32	30,600	17.2	71 to 132	N56C to N280TC	6,010	7,590	1,690	64,610
	304R3	**42.6**	28.2	28,600	14.0	71 to 132	N56C to N280TC	6,260	7,910	1,770	64,610
	304R3	**46.6**	25.7	25,200	11.3	71 to 132	N56C to N280TC	6,430	8,130	1,830	64,610
	304R3	**50.3**	23.9	30,800	12.8	71 to 132	N56C to N280TC	6,580	8,310	1,870	64,610
	304R3	**63.1**	19.0	25,200	8.3	71 to 132	N56C to N280TC	7,040	8,900	2,020	64,610
	304R3	**78.7**	15.2	25,200	6.7	71 to 132	N56C to N280TC	7,530	9,510	2,180	64,610
	304R3	**97**	12.4	21,200	4.5	71 to 132	N56C to N280TC	8,010	10,100	2,330	64,610
	304R3	**121**	9.9	21,200	3.6	71 to 132	N56C to N280TC	8,540	10,800	2,510	64,610
	304R4	**89.4**	13.4	29,900	7.2	71 to 132	N56C to N280TC	7,820	9,880	2,270	64,610
	304R4	**109**	11.0	30,300	5.9	71 to 132	N56C to N280TC	8,310	10,500	2,430	64,610
	304R4	**129**	9.3	31,500	5.2	71 to 132	N56C to N280TC	8,540	10,800	2,570	64,610
	304R4	**148**	8.1	30,600	4.4	71 to 132	N56C to N280TC	8,540	10,800	2,690	64,610
	304R4	**158**	7.6	31,900	4.3	71 to 132	N56C to N280TC	8,540	10,800	2,750	64,610
	304R4	**185**	6.5	30,800	3.6	71 to 132	N56C to N280TC	8,540	10,800	2,890	64,610
	304R4	**214**	5.6	32,400	3.3	71 to 132	N56C to N280TC	8,540	10,800	3,040	64,610

B

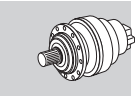

B

304 R

287

35,050 lb•in

n_1 rpm		i	n_2 rpm	T_{n2} lb•in	P_{n1} hp	P (IEC)	NEMA	Rn_2 [lbs] NHC/NPC	HZ/PZ	FZ	$T_{n2\ max}$ lb•in
1200	**304R4**	**227**	5.3	30,900	2.9	71 to 132	N56C to N280TC	8,540	10,800	3,100	64,610
	304R4	**267**	4.5	32,700	2.6	71 to 132	N56C to N280TC	8,680	11,000	3,270	64,610
	304R4	**290**	4.1	32,800	2.4	71 to 132	N56C to N280TC	8,780	11,100	3,360	64,610
	304R4	**307**	3.9	31,000	2.2	71 to 132	N56C to N280TC	8,850	11,200	3,420	64,610
	304R4	**338**	3.6	21,900	1.4	71 to 132	N56C to N280TC	8,970	11,300	3,540	64,610
	304R4	**364**	3.3	27,000	1.6	71 to 132	N56C to N280TC	9,070	11,500	3,620	64,610
	304R4	**414**	2.9	22,300	1.2	71 to 132	N56C to N280TC	9,230	11,700	3,780	64,610
	304R4	**452**	2.7	32,800	1.6	71 to 132	N56C to N280TC	9,350	11,800	3,900	64,610
	304R4	**560**	2.1	23,300	0.89	71 to 132	N56C to N280TC	9,640	12,200	4,180	64,610
	304R4	**699**	1.7	24,200	0.74	71 to 132	N56C to N280TC	9,950	12,600	4,510	64,610

305 R

305

51,330 lb•in

n_1 rpm		i	n_2 rpm	T_{n2} lb•in	P_{n1} hp	P (IEC)	NEMA	Rn_2 [lbs] NHC/NPC	HZ/PZ	FZ	$T_{n2\ max}$ lb•in
1800	**305R2**	**9.23**	195	14,100	46	71 to 132	N56C to N280TC	3,500	4,430	930	68,151
	305R2	**10.9**	165	16,600	46	71 to 132	N56C to N280TC	3,680	4,650	980	68,151
	305R2	**13.7**	132	20,900	46	71 to 132	N56C to N280TC	3,940	4,980	1,060	68,151
	305R2	**15.9**	113	24,200	46	71 to 132	N56C to N280TC	4,120	5,210	1,120	68,151
	305R2	**19.2**	94	24,900	39	71 to 132	N56C to N280TC	4,370	5,520	1,190	68,151
	305R3	**25.7**	70	30,400	20.1	71 to 132	N56C to N280TC	4,760	6,020	1,310	77,887
	305R3	**31.5**	57	31,900	20.1	71 to 132	N56C to N280TC	5,060	6,390	1,400	77,887
	305R3	**37.1**	48	37,400	20.1	71 to 132	N56C to N280TC	5,320	6,720	1,480	77,887
	305R3	**42.6**	42	32,800	20.1	71 to 132	N56C to N280TC	5,540	7,000	1,550	77,887
	305R3	**46.6**	39	38,000	20.1	71 to 132	N56C to N280TC	5,700	7,190	1,600	77,887
	305R3	**50.3**	36	37,900	20.1	71 to 132	N56C to N280TC	5,830	7,360	1,640	77,887
	305R3	**54.2**	33	31,500	18.2	71 to 132	N56C to N280TC	5,960	7,530	1,680	77,887
	305R3	**63.1**	28.5	38,200	19.0	71 to 132	N56C to N280TC	6,240	7,880	1,770	77,887
	305R3	**73.3**	24.5	31,600	13.5	71 to 132	N56C to N280TC	6,530	8,240	1,860	77,887
	305R3	**78.7**	22.9	38,400	15.3	71 to 132	N56C to N280TC	6,670	8,420	1,900	77,887
	305R3	**91.5**	19.7	31,700	10.8	71 to 132	N56C to N280TC	6,970	8,810	2,000	77,887
	305R3	**114**	15.7	31,600	8.6	71 to 132	N56C to N280TC	7,460	9,420	2,150	77,887
	305R4	**129**	13.9	44,900	11.2	71 to 132	N56C to N280TC	7,730	9,770	2,240	77,887
	305R4	**148**	12.1	38,900	8.5	71 to 132	N56C to N280TC	8,060	10,200	2,350	77,887
	305R4	**158**	11.4	46,100	9.4	71 to 132	N56C to N280TC	8,220	10,400	2,400	77,887
	305R4	**185**	9.7	39,700	6.9	71 to 132	N56C to N280TC	8,540	10,800	2,530	77,887
	305R4	**214**	8.4	47,300	7.1	71 to 132	N56C to N280TC	8,540	10,800	2,650	77,887
	305R4	**231**	7.8	31,900	4.4	71 to 132	N56C to N280TC	8,540	10,800	2,720	77,887
	305R4	**255**	7.1	31,900	4.0	71 to 132	N56C to N280TC	8,540	10,800	2,810	77,887
	305R4	**290**	6.2	46,700	5.2	71 to 132	N56C to N280TC	8,540	10,800	2,940	77,887
	305R4	**313**	5.8	31,900	3.3	71 to 132	N56C to N280TC	8,540	10,800	3,010	77,887
	305R4	**336**	5.4	39,500	3.8	71 to 132	N56C to N280TC	8,540	10,800	3,080	77,887
	305R4	**364**	4.9	39,600	3.5	71 to 132	N56C to N280TC	8,560	10,800	3,170	77,887
	305R4	**390**	4.6	32,300	2.7	71 to 132	N56C to N280TC	8,640	10,900	3,240	77,887
	305R4	**452**	4.0	42,000	3.0	71 to 132	N56C to N280TC	8,820	11,100	3,400	77,887
	305R4	**528**	3.4	33,800	2.1	71 to 132	N56C to N280TC	9,020	11,400	3,580	77,887
	305R4	**567**	3.2	42,000	2.4	71 to 132	N56C to N280TC	9,110	11,500	3,670	77,887
	305R4	**659**	2.7	34,900	1.7	71 to 132	N56C to N280TC	9,310	11,800	3,860	77,887
	305R4	**797**	2.3	29,700	1.2	71 to 132	N56C to N280TC	9,570	12,100	4,110	77,887
	305R4	**824**	2.2	36,200	1.4	71 to 132	N56C to N280TC	9,610	12,100	4,160	77,887

305 R

305

51,330 lb•in

n_1 rpm		i	n_2 rpm	T_{n2} lb•in	P_{n1} hp	P (IEC)	NEMA	Rn_2 [lbs] NHC/NPC	HZ/PZ	FZ	$T_{n2\ max}$ lb•in
1200	**305R2**	**9.23**	130	15,900	35	71 to 132	N56C to N280TC	3,960	5,000	1,060	68,151
	305R2	**10.9**	110	18,700	35	71 to 132	N56C to N280TC	4,160	5,250	1,130	68,151
	305R2	**13.7**	88	23,600	35	71 to 132	N56C to N280TC	4,450	5,620	1,210	68,151
	305R2	**15.9**	76	27,400	35	71 to 132	N56C to N280TC	4,660	5,880	1,280	68,151
	305R2	**19.2**	62	25,900	27.3	71 to 132	N56C to N280TC	4,930	6,230	1,360	68,151
	305R3	**25.7**	47	33,900	20.1	71 to 132	N56C to N280TC	5,380	6,800	1,500	77,887
	305R3	**31.5**	38	34,200	20.1	71 to 132	N56C to N280TC	5,720	7,220	1,600	77,887
	305R3	**37.1**	32	39,700	20.1	71 to 132	N56C to N280TC	6,010	7,590	1,690	77,887
	305R3	**42.6**	28.2	34,500	16.9	71 to 132	N56C to N280TC	6,260	7,910	1,770	77,887
	305R3	**46.6**	25.7	38,300	17.1	71 to 132	N56C to N280TC	6,430	8,130	1,830	77,887
	305R3	**50.3**	23.9	40,400	16.8	71 to 132	N56C to N280TC	6,580	8,310	1,870	77,887
	305R3	**54.2**	22.1	31,600	12.2	71 to 132	N56C to N280TC	6,730	8,500	1,920	77,887
	305R3	**63.1**	19.0	38,500	12.7	71 to 132	N56C to N280TC	7,040	8,900	2,020	77,887
	305R3	**73.3**	16.4	31,700	9.0	71 to 132	N56C to N280TC	7,370	9,310	2,130	77,887
	305R3	**78.7**	15.2	38,700	10.2	71 to 132	N56C to N280TC	7,530	9,510	2,180	77,887
	305R3	**91.5**	13.1	31,800	7.2	71 to 132	N56C to N280TC	7,880	9,950	2,290	77,887
	305R3	**114**	10.5	31,800	5.8	71 to 132	N56C to N280TC	8,420	10,600	2,460	77,887
	305R4	**129**	9.3	47,100	7.8	71 to 132	N56C to N280TC	8,540	10,800	2,570	77,887
	305R4	**148**	8.1	39,700	5.8	71 to 132	N56C to N280TC	8,540	10,800	2,690	77,887
	305R4	**158**	7.6	47,500	6.5	71 to 132	N56C to N280TC	8,540	10,800	2,750	77,887
	305R4	**185**	6.5	39,700	4.6	71 to 132	N56C to N280TC	8,540	10,800	2,890	77,887
	305R4	**214**	5.6	48,200	4.8	71 to 132	N56C to N280TC	8,540	10,800	3,040	77,887
	305R4	**231**	5.2	31,900	3.0	71 to 132	N56C to N280TC	8,540	10,800	3,120	77,887
	305R4	**255**	4.7	32,200	2.7	71 to 132	N56C to N280TC	8,620	10,900	3,220	77,887
	305R4	**290**	4.1	47,100	3.5	71 to 132	N56C to N280TC	8,780	11,100	3,360	77,887
	305R4	**313**	3.8	33,200	2.3	71 to 132	N56C to N280TC	8,870	11,200	3,450	77,887
	305R4	**336**	3.6	41,900	2.7	71 to 132	N56C to N280TC	8,960	11,300	3,530	77,887
	305R4	**364**	3.3	42,500	2.5	71 to 132	N56C to N280TC	9,070	11,500	3,620	77,887
	305R4	**390**	3.1	34,300	1.9	71 to 132	N56C to N280TC	9,160	11,600	3,710	77,887
	305R4	**452**	2.7	42,000	2.0	71 to 132	N56C to N280TC	9,350	11,800	3,900	77,887
	305R4	**528**	2.3	36,000	1.5	71 to 132	N56C to N280TC	9,560	12,100	4,100	77,887
	305R4	**567**	2.1	44,400	1.7	71 to 132	N56C to N280TC	9,660	12,200	4,200	77,887
	305R4	**659**	1.8	37,400	1.2	71 to 132	N56C to N280TC	9,870	12,500	4,420	77,887
	305R4	**797**	1.5	31,600	0.85	71 to 132	N56C to N280TC	10,100	12,800	4,710	77,887
	305R4	**824**	1.5	38,900	1.0	71 to 132	N56C to N280TC	10,200	12,900	4,760	77,887

306 R

323

95,940 lb•in

n_1 rpm		i	n_2 rpm	T_{n2} lb•in	P_{n1} hp	P (IEC)	NEMA	Rn_2 [lbs] NHC/NPC	HZ/PZ	FZ	$T_{n2\ max}$ lb•in
1800	**306R2**	**9.23**	195	14,100	46	71 to 160	N56C to N280TC	4,810	6,070	1,360	106,209
	306R2	**10.9**	165	16,600	46	71 to 160	N56C to N280TC	5,060	6,380	1,430	106,209
	306R2	**13.7**	132	20,900	46	71 to 160	N56C to N280TC	5,420	6,830	1,550	106,209
	306R2	**15.9**	113	24,200	46	71 to 160	N56C to N280TC	5,670	7,140	1,630	106,209
	306R2	**19.2**	94	29,200	46	71 to 160	N56C to N280TC	6,000	7,560	1,730	106,209
	306R3	**33.2**	54	49,100	46	71 to 160	N56C to N280TC	7,070	8,910	2,080	131,876
	306R3	**39.2**	46	55,300	44	71 to 160	N56C to N280TC	7,430	9,360	2,200	131,876
	306R3	**46.3**	39	64,000	43	71 to 160	N56C to N280TC	7,810	9,840	2,320	131,876
	306R3	**58.1**	31	64,800	35	71 to 160	N56C to N280TC	8,360	10,500	2,510	131,876
	306R3	**67.5**	26.7	61,800	28.6	71 to 160	N56C to N280TC	8,740	11,000	2,630	131,876
	306R3	**72.9**	24.7	64,500	27.7	71 to 160	N56C to N280TC	8,950	11,300	2,700	131,876

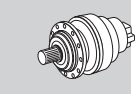

306 R

323

95,940 lb•in

n_1 rpm		i	n_2 rpm	T_{n2} lb•in	P_{n1} hp	P (IEC)	NEMA	Rn_2 [lbs] NHC/NPC	HZ/PZ	FZ	$T_{n2\ max}$ lb•in
1800	**306R3**	**84.7**	21.2	65,400	24.2	71 to 160	N56C to N280TC	9,360	11,800	2,840	131,876
	306R3	**98.5**	18.3	57,400	18.2	71 to 160	N56C to N280TC	9,790	12,300	2,990	131,876
	306R3	**119**	15.1	57,400	15.1	71 to 160	N56C to N280TC	10,400	13,100	3,180	131,876
	306R3	**144**	12.5	48,100	10.4	71 to 160	N56C to N280TC	11,000	13,800	3,390	131,876
	306R4	**158**	11.4	82,700	16.9	71 to 160	N56C to N280TC	11,300	14,200	3,500	131,876
	306R4	**168**	10.7	66,000	12.7	71 to 160	N56C to N280TC	11,500	14,500	3,570	131,876
	306R4	**181**	9.9	83,600	14.9	71 to 160	N56C to N280TC	11,700	14,800	3,660	131,876
	306R4	**214**	8.4	85,500	12.9	71 to 160	N56C to N280TC	11,700	14,800	3,870	131,876
	306R4	**230**	7.8	67,200	9.4	71 to 160	N56C to N280TC	11,700	14,800	3,960	131,876
	306R4	**249**	7.2	71,800	9.3	71 to 160	N56C to N280TC	11,700	14,800	4,070	131,876
	306R4	**289**	6.2	72,500	8.1	71 to 160	N56C to N280TC	11,700	14,800	4,280	131,876
	306R4	**312**	5.8	67,200	7.0	71 to 160	N56C to N280TC	11,700	14,800	4,390	131,876
	306R4	**389**	4.6	67,200	5.6	71 to 160	N56C to N280TC	11,900	15,000	4,720	131,876
	306R4	**420**	4.3	75,400	5.8	71 to 160	N56C to N280TC	12,000	15,100	4,840	131,876
	306R4	**455**	4.0	60,200	4.3	71 to 160	N56C to N280TC	12,100	15,300	4,970	131,876
	306R4	**488**	3.7	77,400	5.1	71 to 160	N56C to N280TC	12,300	15,400	5,090	131,876
	306R4	**550**	3.3	62,200	3.7	71 to 160	N56C to N280TC	12,500	15,700	5,300	131,876
	306R4	**590**	3.0	73,400	4.0	71 to 160	N56C to N280TC	12,600	15,900	5,430	131,876
	306R4	**665**	2.7	51,800	2.5	71 to 160	N56C to N280TC	12,800	16,100	5,650	131,876
	306R4	**830**	2.2	53,600	2.1	71 to 160	N56C to N280TC	13,200	16,700	6,080	131,876
1200	**306R2**	**9.23**	130	15,900	35	71 to 160	N56C to N280TC	5,440	6,850	1,550	106,209
	306R2	**10.9**	110	18,700	35	71 to 160	N56C to N280TC	5,710	7,200	1,640	106,209
	306R2	**13.7**	88	23,600	35	71 to 160	N56C to N280TC	6,120	7,710	1,770	106,209
	306R2	**15.9**	76	27,400	35	71 to 160	N56C to N280TC	6,400	8,060	1,860	106,209
	306R2	**19.2**	62	33,000	35	71 to 160	N56C to N280TC	6,770	8,540	1,980	106,209
	306R3	**33.2**	36	53,900	34	71 to 160	N56C to N280TC	7,980	10,100	2,380	131,876
	306R3	**39.2**	31	61,500	33	71 to 160	N56C to N280TC	8,390	10,600	2,520	131,876
	306R3	**46.3**	25.9	69,600	31	71 to 160	N56C to N280TC	8,820	11,100	2,660	131,876
	306R3	**58.1**	20.7	70,100	25.2	71 to 160	N56C to N280TC	9,440	11,900	2,870	131,876
	306R3	**67.5**	17.8	64,000	19.8	71 to 160	N56C to N280TC	9,880	12,400	3,020	131,876
	306R3	**72.9**	16.5	67,100	19.2	71 to 160	N56C to N280TC	10,100	12,700	3,090	131,876
	306R3	**84.7**	14.2	68,000	16.8	71 to 160	N56C to N280TC	10,600	13,300	3,250	131,876
	306R3	**98.5**	12.2	57,500	12.2	71 to 160	N56C to N280TC	11,100	13,900	3,420	131,876
	306R3	**119**	10.1	57,500	10.1	71 to 160	N56C to N280TC	11,700	14,800	3,640	131,876
	306R3	**144**	8.3	48,700	7.0	71 to 160	N56C to N280TC	11,700	14,800	3,880	131,876
	306R4	**158**	7.6	85,800	11.7	71 to 160	N56C to N280TC	11,700	14,800	4,000	131,876
	306R4	**168**	7.2	67,400	8.6	71 to 160	N56C to N280TC	11,700	14,800	4,080	131,876
	306R4	**181**	6.6	83,600	9.9	71 to 160	N56C to N280TC	11,700	14,800	4,190	131,876
	306R4	**214**	5.6	86,800	8.7	71 to 160	N56C to N280TC	11,700	14,800	4,430	131,876
	306R4	**230**	5.2	67,200	6.3	71 to 160	N56C to N280TC	11,700	14,800	4,540	131,876
	306R4	**249**	4.8	73,900	6.4	71 to 160	N56C to N280TC	11,800	14,900	4,660	131,876
	306R4	**289**	4.2	75,800	5.6	71 to 160	N56C to N280TC	12,100	15,200	4,900	131,876
	306R4	**312**	3.9	67,200	4.6	71 to 160	N56C to N280TC	12,200	15,400	5,020	131,876
	306R4	**389**	3.1	67,200	3.7	71 to 160	N56C to N280TC	12,600	15,800	5,400	131,876
	306R4	**420**	2.9	80,900	4.1	71 to 160	N56C to N280TC	12,700	16,000	5,540	131,876
	306R4	**455**	2.6	64,600	3.1	71 to 160	N56C to N280TC	12,900	16,200	5,690	131,876
	306R4	**488**	2.5	82,800	3.6	71 to 160	N56C to N280TC	13,000	16,400	5,830	131,876
	306R4	**550**	2.2	66,600	2.6	71 to 160	N56C to N280TC	13,200	16,700	6,070	131,876
	306R4	**590**	2.0	77,100	2.8	71 to 160	N56C to N280TC	13,300	16,800	6,210	131,876
	306R4	**665**	1.8	55,500	1.8	71 to 160	N56C to N280TC	13,600	17,100	6,460	131,876
	306R4	**830**	1.4	57,800	1.5	71 to 160	N56C to N280TC	14,000	17,700	6,960	131,876

307 R	341	138,780 lb•in

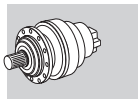

n_1 rpm		i	n_2 rpm	T_{n2} lb•in	P_{n1} hp	P (IEC)	NEMA	Rn_2 [lbs] NHC/NPC	HZ/PZ	FZ	$T_{n2\,max}$ lb•in
1800	**307R2**	**13.0**	139	42,800	100	132 to 200	N56C to N280TC	6,670	9,060	1,950	164,624
	307R2	**15.5**	116	51,100	100	132 to 200	N56C to N280TC	7,030	9,560	2,070	185,866
	307R2	**19.8**	91	65,500	100	132 to 200	N56C to N280TC	7,570	10,300	2,250	185,866
	307R2	**23.5**	76	68,800	89	132 to 200	N56C to N280TC	7,970	10,800	2,380	185,866
	307R3	**31.6**	57	46,700	46	71 to 160	N56C to N280TC	8,710	11,800	2,630	164,624
	307R3	**37.7**	48	55,700	46	71 to 160	N56C to N280TC	9,190	12,500	2,790	185,866
	307R3	**44.6**	40	65,900	46	71 to 160	N56C to N280TC	9,660	13,100	2,950	185,866
	307R3	**55.9**	32	82,600	46	71 to 160	N56C to N280TC	10,300	14,100	3,180	185,866
	307R3	**65.0**	27.7	93,000	45	71 to 160	N56C to N280TC	10,800	14,700	3,340	185,866
	307R3	**71.8**	25.1	87,900	38	71 to 160	N56C to N280TC	11,100	15,100	3,460	185,866
	307R3	**78.6**	22.9	95,600	38	71 to 160	N56C to N280TC	11,500	15,600	3,560	185,866
	307R3	**83.4**	21.6	89,100	33	71 to 160	N56C to N280TC	11,700	15,800	3,630	185,866
	307R3	**99.0**	18.2	75,500	23.9	71 to 160	N56C to N280TC	12,300	16,700	3,850	185,866
	307R3	**120**	15.0	75,900	19.8	71 to 160	N56C to N280TC	13,000	17,700	4,100	185,866
	307R4	**152**	11.8	115,300	20.1	71 to 160	N56C to N280TC	14,000	19,000	4,440	185,866
	307R4	**165**	10.9	94,800	18.5	71 to 160	N56C to N280TC	14,300	19,500	4,560	185,866
	307R4	**191**	9.4	120,500	20.1	71 to 160	N56C to N280TC	14,700	20,000	4,790	185,866
	307R4	**206**	8.8	121,800	19.1	71 to 160	N56C to N280TC	14,700	20,000	4,910	185,866
	307R4	**232**	7.8	97,100	13.5	71 to 160	N56C to N280TC	14,700	20,000	5,110	185,866
	307R4	**258**	7.0	125,800	15.7	71 to 160	N56C to N280TC	14,700	20,000	5,290	185,866
	307R4	**284**	6.3	98,500	11.2	71 to 160	N56C to N280TC	14,700	20,000	5,470	185,866
	307R4	**300**	6.0	122,800	13.2	71 to 160	N56C to N280TC	14,700	20,000	5,570	185,866
	307R4	**331**	5.4	99,500	9.7	71 to 160	N56C to N280TC	14,700	20,000	5,750	185,866
	307R4	**363**	5.0	108,900	9.7	71 to 160	N56C to N280TC	14,700	20,000	5,930	185,866
	307R4	**413**	4.4	102,400	8.0	71 to 160	N56C to N280TC	15,000	20,400	6,190	185,866
	307R4	**453**	4.0	116,800	8.3	71 to 160	N56C to N280TC	15,200	20,600	6,390	185,866
	307R4	**490**	3.7	80,500	5.3	71 to 160	N56C to N280TC	15,300	20,900	6,560	185,866
	307R4	**581**	3.1	108,500	6.0	71 to 160	N56C to N280TC	15,700	21,400	6,940	185,866
	307R4	**690**	2.6	84,500	3.9	71 to 160	N56C to N280TC	16,100	21,900	7,350	185,866
1200	**307R2**	**13.0**	93	48,400	76	132 to 200	N56C to N280TC	7,530	10,200	2,240	164,624
	307R2	**15.5**	78	57,700	76	132 to 200	N56C to N280TC	7,940	10,800	2,370	185,866
	307R2	**19.8**	61	74,000	75	132 to 200	N56C to N280TC	8,550	11,600	2,580	185,866
	307R2	**23.5**	51	72,700	63	132 to 200	N56C to N280TC	9,010	12,200	2,730	185,866
	307R3	**31.6**	38	52,200	34	71 to 160	N56C to N280TC	9,840	13,400	3,010	164,624
	307R3	**37.7**	32	63,000	35	71 to 160	N56C to N280TC	10,400	14,100	3,190	185,866
	307R3	**44.6**	26.9	74,400	35	71 to 160	N56C to N280TC	10,900	14,800	3,370	185,866
	307R3	**55.9**	21.5	93,300	35	71 to 160	N56C to N280TC	11,700	15,900	3,640	185,866
	307R3	**65.0**	18.5	102,800	33	71 to 160	N56C to N280TC	12,200	16,600	3,830	185,866
	307R3	**71.8**	16.7	91,200	26.5	71 to 160	N56C to N280TC	12,600	17,100	3,960	185,866
	307R3	**78.6**	15.3	101,900	27.0	71 to 160	N56C to N280TC	12,900	17,600	4,080	185,866
	307R3	**83.4**	14.4	92,400	23.1	71 to 160	N56C to N280TC	13,200	17,900	4,160	185,866
	307R3	**99.0**	12.1	76,500	16.1	71 to 160	N56C to N280TC	13,900	18,800	4,400	185,866
	307R3	**120**	10.0	77,000	13.4	71 to 160	N56C to N280TC	14,700	20,000	4,690	185,866
	307R4	**152**	7.9	123,600	17.5	71 to 160	N56C to N280TC	14,700	20,000	5,080	185,866
	307R4	**165**	7.3	97,600	12.7	71 to 160	N56C to N280TC	14,700	20,000	5,220	185,866
	307R4	**191**	6.3	127,600	14.4	71 to 160	N56C to N280TC	14,700	20,000	5,480	185,866
	307R4	**206**	5.8	129,000	13.5	71 to 160	N56C to N280TC	14,700	20,000	5,620	185,866
	307R4	**232**	5.2	99,800	9.2	71 to 160	N56C to N280TC	14,700	20,000	5,850	185,866
	307R4	**258**	4.7	131,800	11	71 to 160	N56C to N280TC	14,800	20,200	6,060	185,866
	307R4	**284**	4.2	102,900	7.8	71 to 160	N56C to N280TC	15,000	20,500	6,260	185,866
	307R4	**300**	4.0	124,000	8.9	71 to 160	N56C to N280TC	15,200	20,600	6,370	185,866
	307R4	**331**	3.6	105,600	6.9	71 to 160	N56C to N280TC	15,400	20,900	6,590	185,866
	307R4	**363**	3.3	108,900	6.5	71 to 160	N56C to N280TC	15,600	21,200	6,790	185,866
	307R4	**413**	2.9	109,600	5.7	71 to 160	N56C to N280TC	15,900	21,600	7,090	185,866
	307R4	**453**	2.6	121,500	5.8	71 to 160	N56C to N280TC	16,100	21,900	7,310	185,866
	307R4	**490**	2.4	85,200	3.7	71 to 160	N56C to N280TC	16,300	22,100	7,510	185,866
	307R4	**581**	2.1	115,300	4.3	71 to 160	N56C to N280TC	16,700	22,700	7,940	185,866
	307R4	**690**	1.7	89,700	2.8	71 to 160	N56C to N280TC	17,100	23,200	8,410	185,866

B

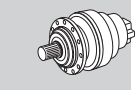

309 R	359	205,690 lb•in

n_1 rpm		i	n_2 rpm	T_{n2} lb•in	P_{n1} hp	P (IEC)	NEMA	Rn_2 [lbs] NHC/NPC	HZ/PZ	FZ	$T_{n2\ max}$ lb•in
1800	**309R2**	**13.0**	139	42,800	100	132 to 200	—	6,670	9,060	1,560	242,511
	309R2	**15.5**	116	51,100	100	132 to 200	—	7,030	9,560	1,660	242,511
	309R2	**19.8**	91	65,500	100	132 to 200	—	7,570	10,300	1,800	242,511
	309R2	**23.5**	76	77,800	100	132 to 200	—	7,970	10,800	1,910	242,511
	309R3	**31.6**	57	46,700	46	71 to 160	N250TC to N280TC	8,710	11,800	2,100	246,936
	309R3	**37.7**	48	55,700	46	71 to 160	N250TC to N280TC	9,190	12,500	2,230	256,672
	309R3	**44.6**	40	65,900	46	71 to 160	N250TC to N280TC	9,660	13,100	2,360	256,672
	309R3	**55.9**	32	82,600	46	71 to 160	N250TC to N280TC	10,300	14,100	2,540	256,672
	309R3	**65.0**	27.7	94,300	45	71 to 160	N250TC to N280TC	10,800	14,700	2,670	256,672
	309R3	**71.8**	25.1	106,000	46	71 to 160	N250TC to N280TC	11,100	15,100	2,760	256,672
	309R3	**83.4**	21.6	118,200	44	71 to 160	N250TC to N280TC	11,700	15,800	2,910	256,672
	309R3	**99.0**	18.2	112,400	36	71 to 160	N250TC to N280TC	12,300	16,700	3,080	256,672
	309R3	**120**	15.0	113,600	29.7	71 to 160	N250TC to N280TC	13,000	17,700	3,280	256,672
	309R4	**152**	11.8	156,300	20.1	71 to 160	N56C to N280TC	14,000	19,000	3,550	256,672
	309R4	**165**	10.9	141,500	20.1	71 to 160	N56C to N280TC	14,300	19,500	3,650	256,672
	309R4	**191**	9.4	152,000	20.1	71 to 160	N56C to N280TC	14,700	20,000	3,830	256,672
	309R4	**206**	8.8	168,800	20.1	71 to 160	N56C to N280TC	14,700	20,000	3,930	256,672
	309R4	**232**	7.8	145,700	20.1	71 to 160	N56C to N280TC	14,700	20,000	4,090	256,672
	309R4	**258**	7.0	153,300	19.2	71 to 160	N56C to N280TC	14,700	20,000	4,240	256,672
	309R4	**284**	6.3	147,600	16.7	71 to 160	N56C to N280TC	14,700	20,000	4,380	256,672
	309R4	**331**	5.4	149,100	14.5	71 to 160	N56C to N280TC	14,700	20,000	4,600	256,672
	309R4	**374**	4.8	126,600	10.9	71 to 160	N56C to N280TC	14,800	20,100	4,800	256,672
	309R4	**413**	4.4	153,500	12.0	71 to 160	N56C to N280TC	15,000	20,400	4,960	256,672
	309R4	**457**	3.9	119,200	8.4	71 to 160	N56C to N280TC	15,200	20,700	5,120	256,672
	309R4	**490**	3.7	120,400	7.9	71 to 160	N56C to N280TC	15,300	20,900	5,250	256,672
	309R4	**581**	3.1	139,800	7.8	71 to 160	N56C to N280TC	15,700	21,400	5,550	256,672
	309R4	**690**	2.6	126,600	5.9	71 to 160	N56C to N280TC	16,100	21,900	5,880	256,672
1200	**309R2**	**13.0**	93	48,400	76	132 to 200	—	7,530	10,200	1,790	242,511
	309R2	**15.5**	78	57,700	76	132 to 200	—	7,940	10,800	1,900	242,511
	309R2	**19.8**	61	74,000	75	132 to 200	—	8,550	11,600	2,060	242,511
	309R2	**23.5**	51	87,800	75	132 to 200	—	9,010	12,200	2,180	242,511
	309R3	**31.6**	38	52,800	35	71 to 160	N250TC to N280TC	9,840	13,400	2,410	246,936
	309R3	**37.7**	32	63,000	35	71 to 160	N250TC to N280TC	10,400	14,100	2,550	256,672
	309R3	**44.6**	26.9	74,400	35	71 to 160	N250TC to N280TC	10,900	14,800	2,700	256,672
	309R3	**55.9**	21.5	93,300	35	71 to 160	N250TC to N280TC	11,700	15,900	2,910	256,672
	309R3	**65.0**	18.5	105,200	34	71 to 160	N250TC to N280TC	12,200	16,600	3,060	256,672
	309R3	**71.8**	16.7	119,800	35	71 to 160	N250TC to N280TC	12,600	17,100	3,160	256,672
	309R3	**83.4**	14.4	130,800	33	71 to 160	N250TC to N280TC	13,200	17,900	3,330	256,672
	309R3	**99.0**	12.1	114,200	24.1	71 to 160	N250TC to N280TC	13,900	18,800	3,520	256,672
	309R3	**120**	10.0	115,100	20.0	71 to 160	N250TC to N280TC	14,700	20,000	3,750	256,672
	309R4	**152**	7.9	172,200	20.1	71 to 160	N56C to N280TC	14,700	20,000	4,060	256,672
	309R4	**165**	7.3	146,300	19.0	71 to 160	N56C to N280TC	14,700	20,000	4,180	256,672
	309R4	**191**	6.3	153,800	17.3	71 to 160	N56C to N280TC	14,700	20,000	4,380	256,672
	309R4	**206**	5.8	182,600	19.1	71 to 160	N56C to N280TC	14,700	20,000	4,500	256,672
	309R4	**232**	5.2	149,600	13.9	71 to 160	N56C to N280TC	14,700	20,000	4,680	256,672
	309R4	**258**	4.7	154,900	12.9	71 to 160	N56C to N280TC	14,800	20,200	4,850	256,672
	309R4	**284**	4.2	152,400	11.5	71 to 160	N56C to N280TC	15,000	20,500	5,010	256,672
	309R4	**331**	3.6	158,400	10.3	71 to 160	N56C to N280TC	15,400	20,900	5,270	256,672
	309R4	**374**	3.2	126,600	7.3	71 to 160	N56C to N280TC	15,600	21,300	5,490	256,672
	309R4	**413**	2.9	164,500	8.6	71 to 160	N56C to N280TC	15,900	21,600	5,670	256,672
	309R4	**457**	2.6	126,500	6.0	71 to 160	N56C to N280TC	16,100	21,900	5,870	256,672
	309R4	**490**	2.4	128,000	5.6	71 to 160	N56C to N280TC	16,300	22,100	6,010	256,672

309 R | 359 | 205,690 lb•in

n_1 rpm		i	n_2 rpm	T_{n2} lb•in	P_{n1} hp	P (IEC)	NEMA	Rn_2 [lbs] NHC/NPC	HZ/PZ	FZ	$T_{n2\ max}$ lb•in
1200	309R4	581	2.1	139,800	5.2	71 to 160	N56C to N280TC	16,700	22,700	6,360	256,672
	309R4	690	1.7	136,100	4.2	71 to 160	N56C to N280TC	17,100	23,200	6,730	256,672

310M R | 375 | 297,740 lb•in

n_1 rpm		i	n_2 rpm	T_{n2} lb•in	P_{n1} hp	P (IEC)	NEMA	Rn_2 [lbs] NHC/NPC	HZ/PZ	FZ	$T_{n2\ max}$ lb•in
1800	310MR2B	12.0	150	99,300	174	160 to 225	N320TC to N360TC	7,650	9,870	2,750	421,296
	310MR2B	15.4	117	127,500	174	160 to 225	N320TC to N360TC	8,240	10,600	2,990	421,296
	310MR2B	18.3	98	147,300	174	160 to 225	N320TC to N360TC	8,670	11,200	3,170	421,296
	310MR2C	16.6	108	125,400	174	160 to 250	N320TC to N360TC	8,430	10,900	3,070	421,296
	310MR2C	21.3	84	156,700	174	160 to 250	N320TC to N360TC	9,080	11,700	3,330	421,296
	310MR2C	25.3	71	152,200	174	160 to 250	N320TC to N360TC	9,560	12,300	3,530	421,296
	310MR3	37.7	48	54,300	45	71 to 160	N56C to N280TC	10,800	13,900	4,030	421,296
	310MR3	44.6	40	64,100	45	71 to 160	N56C to N280TC	11,300	14,600	4,260	421,296
	310MR3	55.9	32	80,400	45	71 to 160	N56C to N280TC	12,100	15,700	4,590	421,296
	310MR3	65.0	27.7	93,500	45	71 to 160	N56C to N280TC	12,700	16,400	4,830	421,296
	310MR3	71.8	25.1	103,200	45	71 to 160	N56C to N280TC	13,100	16,900	4,990	421,296
	310MR3	78.6	22.9	113,100	45	71 to 160	N56C to N280TC	13,400	17,300	5,150	421,296
	310MR3	83.4	21.6	120,000	45	71 to 160	N56C to N280TC	13,700	17,700	5,250	421,296
	310MR3	99.0	18.2	135,600	43	71 to 160	N56C to N280TC	14,400	18,600	5,560	421,296
	310MR3	120	15.0	147,200	38	71 to 160	N56C to N280TC	15,200	19,700	5,920	421,296
	310MR4	136	13.2	189,600	45	71 to 160	N56C to N280TC	15,800	20,400	6,180	421,296
	310MR4	160	11.2	220,200	44	71 to 160	N56C to N280TC	16,600	21,500	6,530	421,296
	310MR4	189	9.5	236,300	40	71 to 160	N56C to N280TC	17,200	22,200	6,900	421,296
	310MR4	206	8.7	193,500	30	71 to 160	N56C to N280TC	17,200	22,200	7,090	421,296
	310MR4	238	7.6	244,400	33	71 to 160	N56C to N280TC	17,200	22,200	7,440	421,296
	310MR4	258	7.0	196,400	24.5	71 to 160	N56C to N280TC	17,200	22,200	7,650	421,296
	310MR4	276	6.5	243,000	28.4	71 to 160	N56C to N280TC	17,200	22,200	7,820	421,296
	310MR4	305	5.9	198,700	21.0	71 to 160	N56C to N280TC	17,200	22,200	8,090	421,296
	310MR4	347	5.2	258,400	24.0	71 to 160	N56C to N280TC	17,200	22,200	8,440	421,296
	310MR4	383	4.7	203,100	17.1	71 to 160	N56C to N280TC	17,400	22,400	8,720	421,296
	310MR4	454	4.0	166,000	11.8	71 to 160	N56C to N280TC	17,800	23,000	9,230	421,296
	310MR4	517	3.5	214,100	13.4	71 to 160	N56C to N280TC	18,100	23,400	9,640	421,296
	310MR4	590	3.1	171,100	9.4	71 to 160	N56C to N280TC	18,500	23,900	10,100	421,296
	310MR4	639	2.8	176,300	8.9	71 to 160	N56C to N280TC	18,700	24,100	10,300	421,296
	310MR4	757	2.4	219,700	9.4	71 to 160	N56C to N280TC	19,100	24,700	10,900	421,296
	310MR4	898	2.0	187,300	6.7	71 to 160	N56C to N280TC	19,600	25,300	11,600	421,296
1200	310MR2B	12.0	100	112,200	174	160 to 225	N320TC to N360TC	8,630	11,100	3,150	421,296
	310MR2B	15.4	78	144,000	174	160 to 225	N320TC to N360TC	9,310	12,000	3,420	421,296
	310MR2B	18.3	66	153,400	170	160 to 225	N320TC to N360TC	9,800	12,600	3,620	421,296
	310MR2C	16.6	72	141,700	172	160 to 250	N320TC to N360TC	9,520	12,300	3,510	421,296
	310MR2C	21.3	56	177,000	168	160 to 250	N320TC to N360TC	10,300	13,200	3,810	421,296
	310MR2C	25.3	47	157,600	126	160 to 250	N320TC to N360TC	10,800	13,900	4,040	421,296
	310MR3	37.7	32	61,300	34	71 to 160	N56C to N280TC	12,200	15,700	4,610	421,296
	310MR3	44.6	26.9	72,400	34	71 to 160	N56C to N280TC	12,800	16,500	4,870	421,296
	310MR3	55.9	21.5	90,800	34	71 to 160	N56C to N280TC	13,700	17,700	5,260	421,296
	310MR3	65.0	18.5	105,600	34	71 to 160	N56C to N280TC	14,300	18,500	5,530	421,296
	310MR3	71.8	16.7	116,600	34	71 to 160	N56C to N280TC	14,800	19,100	5,710	421,296
	310MR3	78.6	15.3	127,800	34	71 to 160	N56C to N280TC	15,200	19,600	5,890	421,296

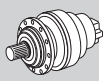

B

310M R

375

297,740 lb•in

n_1 rpm		i	n_2 rpm	T_{n2} lb•in	P_{n1} hp	P (IEC)	NEMA	Rn_2 [lbs] NHC/NPC	HZ/PZ	FZ	$T_{n2\ max}$ lb•in
1200	**310MR3**	**83.4**	14.4	135,500	34	71 to 160	N56C to N280TC	15,400	19,900	6,010	421,296
	310MR3	**99.0**	12.1	150,200	32	71 to 160	N56C to N280TC	16,300	21,000	6,360	421,296
	310MR3	**120**	10.0	157,600	27.4	71 to 160	N56C to N280TC	17,200	22,200	6,780	421,296
	310MR4	**136**	8.8	214,100	34	71 to 160	N56C to N280TC	17,200	22,200	7,070	421,296
	310MR4	**160**	7.5	240,800	32	71 to 160	N56C to N280TC	17,200	22,200	7,470	421,296
	310MR4	**189**	6.3	250,900	28.5	71 to 160	N56C to N280TC	17,200	22,200	7,900	421,296
	310MR4	**206**	5.8	198,800	20.8	71 to 160	N56C to N280TC	17,200	22,200	8,120	421,296
	310MR4	**238**	5.1	259,500	23.5	71 to 160	N56C to N280TC	17,200	22,200	8,520	421,296
	310MR4	**258**	4.6	203,500	16.9	71 to 160	N56C to N280TC	17,400	22,500	8,760	421,296
	310MR4	**276**	4.3	248,400	19.3	71 to 160	N56C to N280TC	17,600	22,700	8,960	421,296
	310MR4	**305**	3.9	209,500	14.8	71 to 160	N56C to N280TC	17,800	23,000	9,260	421,296
	310MR4	**347**	3.5	265,900	16.5	71 to 160	N56C to N280TC	18,100	23,400	9,660	421,296
	310MR4	**383**	3.1	218,100	12.3	71 to 160	N56C to N280TC	18,400	23,800	9,980	421,296
	310MR4	**454**	2.6	178,400	8.4	71 to 160	N56C to N280TC	18,900	24,400	10,600	421,296
	310MR4	**517**	2.3	229,900	9.6	71 to 160	N56C to N280TC	19,200	24,800	11,000	421,296
	310MR4	**590**	2.0	171,400	6.3	71 to 160	N56C to N280TC	19,600	25,300	11,500	421,296
	310MR4	**639**	1.9	189,400	6.4	71 to 160	N56C to N280TC	19,800	25,600	11,800	421,296
	310MR4	**757**	1.6	219,700	6.2	71 to 160	N56C to N280TC	20,300	26,200	12,500	421,296
	310MR4	**898**	1.3	201,200	4.8	71 to 160	N56C to N280TC	20,800	26,800	13,300	421,296

311M R

393

435,550 lb•in

n_1 rpm		i	n_2 rpm	T_{n2} lb•in	P_{n1} hp	P (IEC)	NEMA	Rn_2 [lbs] NHC/NPC	HZ/PZ	FZ	$T_{n2\ max}$ lb•in
1800	**311MR2B**	**12.0**	150	99,300	201	180 to 250	N320TC to N360TC	9,560	12,500	2,750	515,999
	311MR2B	**15.4**	117	127,500	201	180 to 250	N320TC to N360TC	10,300	13,400	2,990	515,999
	311MR2B	**18.3**	98	151,400	201	180 to 250	N320TC to N360TC	10,800	14,200	3,170	515,999
	311MR2C	**16.6**	108	125,400	201	180 to 250	N320TC to N360TC	10,500	13,800	3,070	515,999
	311MR2C	**21.3**	84	161,000	201	180 to 250	N320TC to N360TC	11,400	14,800	3,330	515,999
	311MR2C	**25.3**	71	191,100	201	180 to 250	N320TC to N360TC	12,000	15,600	3,530	515,999
	311MR3	**53.0**	34	169,800	100	132 to 200	N250TC to N280TC	14,900	19,500	4,510	515,999
	311MR3	**63.2**	28.5	202,700	100	132 to 200	N250TC to N280TC	15,700	20,500	4,790	515,999
	311MR3	**68.0**	26.5	218,000	100	132 to 200	N250TC to N280TC	16,100	21,000	4,900	515,999
	311MR3	**81.1**	22.2	251,800	97	132 to 200	N250TC to N280TC	17,000	22,100	5,200	515,999
	311MR3	**96.3**	18.7	253,300	82	132 to 200	N250TC to N280TC	17,900	22,500	5,510	515,999
	311MR3	**104**	17.3	285,200	86	132 to 200	N250TC to N280TC	18,300	22,500	5,650	515,999
	311MR3	**124**	14.6	295,500	75	132 to 200	N250TC to N280TC	19,200	22,500	5,980	515,999
	311MR3	**147**	12.3	240,700	51	132 to 200	N250TC to N280TC	20,300	22,500	6,330	515,999
	311MR4	**154**	11.7	215,500	45	71 to 160	N56C to N280TC	20,600	22,500	6,440	515,999
	311MR4	**182**	9.9	254,300	45	71 to 160	N56C to N280TC	21,500	22,500	6,810	515,999
	311MR4	**198**	9.1	275,800	45	71 to 160	N56C to N280TC	21,500	22,500	7,000	515,999
	311MR4	**229**	7.9	319,300	45	71 to 160	N56C to N280TC	21,500	22,500	7,350	515,999
	311MR4	**266**	6.8	369,000	45	71 to 160	N56C to N280TC	21,500	22,500	7,720	515,999
	311MR4	**294**	6.1	320,300	35	71 to 160	N56C to N280TC	21,500	22,500	7,980	515,999
	311MR4	**341**	5.3	323,600	31	71 to 160	N56C to N280TC	21,500	22,500	8,390	515,999
	311MR4	**413**	4.4	332,600	26	71 to 160	N56C to N280TC	22,000	22,900	8,940	515,999
	311MR4	**438**	4.1	336,000	24.8	71 to 160	N56C to N280TC	22,100	23,100	9,120	515,999
	311MR4	**490**	3.7	283,400	18.7	71 to 160	N56C to N280TC	22,500	23,500	9,470	515,999
	311MR4	**520**	3.5	345,200	21.4	71 to 160	N56C to N280TC	22,700	23,700	9,660	515,999
	311MR4	**629**	2.9	356,300	18.3	71 to 160	N56C to N280TC	23,300	24,300	10,300	515,999
	311MR4	**746**	2.4	276,500	12.0	71 to 160	N56C to N280TC	23,900	24,900	10,900	515,999

311M R

393

435,550 lb•in

n_1 rpm		i	n_2 rpm	T_{n2} lb•in	P_{n1} hp	P (IEC)	NEMA	Rn_2 [lbs] NHC/NPC	HZ/PZ	FZ	$T_{n2\ max}$ lb•in
1200	311MR2B	12.0	100	112,200	189	180 to 250	N320TC to N360TC	10,800	14,100	3,150	515,999
	311MR2B	15.4	78	144,000	189	180 to 250	N320TC to N360TC	11,600	15,200	3,420	515,999
	311MR2B	18.3	66	171,000	189	180 to 250	N320TC to N360TC	12,300	16,000	3,620	515,999
	311MR2C	16.6	72	141,700	172	180 to 250	N320TC to N360TC	11,900	15,500	3,510	515,999
	311MR2C	21.3	56	181,800	172	180 to 250	N320TC to N360TC	12,800	16,700	3,810	515,999
	311MR2C	25.3	47	213,200	170	180 to 250	N320TC to N360TC	13,500	17,600	4,040	515,999
	311MR3	53.0	22.6	191,800	76	132 to 200	N250TC to N280TC	16,900	22,000	5,160	515,999
	311MR3	63.2	19.0	228,900	76	132 to 200	N250TC to N280TC	17,800	22,500	5,480	515,999
	311MR3	68.0	17.6	246,200	76	132 to 200	N250TC to N280TC	18,200	22,500	5,610	515,999
	311MR3	81.1	14.8	279,900	72	132 to 200	N250TC to N280TC	19,200	22,500	5,950	515,999
	311MR3	96.3	12.5	272,400	59	132 to 200	N250TC to N280TC	20,200	22,500	6,300	515,999
	311MR3	104	11.5	303,300	61	132 to 200	N250TC to N280TC	20,600	22,500	6,470	515,999
	311MR3	124	9.7	310,500	52	132 to 200	N250TC to N280TC	21,500	22,500	6,850	515,999
	311MR3	147	8.2	241,400	34	132 to 200	N250TC to N280TC	21,500	22,500	7,250	515,999
	311MR4	154	7.8	243,300	34	71 to 160	N56C to N280TC	21,500	22,500	7,380	515,999
	311MR4	182	6.6	287,300	34	71 to 160	N56C to N280TC	21,500	22,500	7,800	515,999
	311MR4	198	6.1	308,200	33	71 to 160	N56C to N280TC	21,500	22,500	8,020	515,999
	311MR4	229	5.2	360,600	34	71 to 160	N56C to N280TC	21,500	22,500	8,410	515,999
	311MR4	266	4.5	403,700	33	71 to 160	N56C to N280TC	21,900	22,800	8,840	515,999
	311MR4	294	4.1	336,300	24.6	71 to 160	N56C to N280TC	22,200	23,100	9,140	515,999
	311MR4	341	3.5	345,300	21.8	71 to 160	N56C to N280TC	22,600	23,600	9,610	515,999
	311MR4	413	2.9	356,900	18.6	71 to 160	N56C to N280TC	23,300	24,300	10,200	515,999
	311MR4	438	2.7	360,600	17.7	71 to 160	N56C to N280TC	23,500	24,500	10,400	515,999
	311MR4	490	2.4	283,700	12.5	71 to 160	N56C to N280TC	23,800	24,900	10,800	515,999
	311MR4	520	2.3	364,400	15.1	71 to 160	N56C to N280TC	24,000	25,100	11,100	515,999
	311MR4	629	1.9	364,600	12.5	71 to 160	N56C to N280TC	24,700	25,800	11,800	515,999
	311MR4	746	1.6	296,900	8.6	71 to 160	N56C to N280TC	25,300	26,400	12,500	515,999

313M R

411

539,360 lb•in

n_1 rpm		i	n_2 rpm	T_{n2} lb•in	P_{n1} hp	P (IEC)	NEMA	Rn_2 [lbs] NHC/NPC	HZ/PZ	FZ	$T_{n2\ max}$ lb•in
1800	313MR2B	12.2	148	100,700	201	180 to 250	N320TC to N360TC	13,300	16,700	3,400	763,820
	313MR2B	15.9	113	131,100	201	180 to 250	N320TC to N360TC	14,400	18,100	3,710	763,820
	313MR2B	19.1	94	157,900	201	180 to 250	N320TC to N360TC	15,200	19,100	3,950	763,820
	313MR2C	16.8	107	127,000	201	180 to 250	N320TC to N360TC	14,700	18,400	3,790	929,329
	313MR2C	22.0	82	165,600	201	180 to 250	N320TC to N360TC	15,900	19,900	4,140	929,329
	313MR2C	26.4	68	199,300	201	180 to 250	N320TC to N360TC	16,800	21,000	4,400	929,329
	313MR3	53.7	34	172,000	100	132 to 200	N250TC to N280TC	20,800	26,000	5,580	929,329
	313MR3	64.0	28.1	205,200	100	132 to 200	N250TC to N280TC	21,900	27,400	5,910	929,329
	313MR3	69.9	25.7	224,100	100	132 to 200	N250TC to N280TC	22,500	28,200	6,090	929,329
	313MR3	82.2	21.9	263,400	100	132 to 200	N250TC to N280TC	23,600	29,600	6,430	929,329
	313MR3	97.5	18.5	312,600	100	132 to 200	N250TC to N280TC	24,900	31,100	6,810	929,329
	313MR3	107	16.8	323,100	94	132 to 200	N250TC to N280TC	25,600	32,000	7,020	929,329
	313MR3	127	14.2	345,700	85	132 to 200	N250TC to N280TC	26,900	33,700	7,430	929,329
	313MR3	153	11.8	267,300	55	132 to 200	N250TC to N280TC	28,500	35,600	7,910	929,329
	313MR4	185	9.8	257,600	45	71 to 160	N56C to N280TC	29,900	37,400	8,420	929,329
	313MR4	201	9.0	280,100	45	71 to 160	N56C to N280TC	29,900	37,400	8,660	929,329
	313MR4	237	7.6	330,600	45	71 to 160	N56C to N280TC	29,900	37,400	9,150	929,329
	313MR4	281	6.4	392,400	45	71 to 160	N56C to N280TC	29,900	37,400	9,690	929,329
	313MR4	309	5.8	378,500	40	71 to 160	N56C to N280TC	29,900	37,400	9,990	929,329

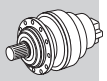

B

313M R

411

539,360 lb•in

n_1 rpm		i	n_2 rpm	T_{n2} lb•in	P_{n1} hp	P (IEC)	NEMA	Rn_2 [lbs] NHC/NPC	HZ/PZ	FZ	$T_{n2\ max}$ lb•in
1800	**313MR4**	**346**	5.2	482,400	45	71 to 160	N56C to N280TC	29,900	37,400	10,400	929,329
	313MR4	**387**	4.6	386,800	32	71 to 160	N56C to N280TC	30,200	37,800	10,800	929,329
	313MR4	**450**	4.0	397,100	28.4	71 to 160	N56C to N280TC	30,800	38,600	11,300	929,329
	313MR4	**496**	3.6	430,500	28.0	71 to 160	N56C to N280TC	31,300	39,200	11,700	929,329
	313MR4	**535**	3.4	409,200	24.7	71 to 160	N56C to N280TC	31,600	39,600	12,000	929,329
	313MR4	**647**	2.8	423,000	21.1	71 to 160	N56C to N280TC	32,500	40,700	12,800	929,329
	313MR4	**778**	2.3	306,500	12.7	71 to 160	N56C to N280TC	33,400	41,800	13,600	929,329
1200	**313MR2B**	**12.2**	99	113,700	189	180 to 250	N320TC to N360TC	15,000	18,800	3,890	763,820
	313MR2B	**15.9**	76	148,100	189	180 to 250	N320TC to N360TC	16,300	20,400	4,250	763,820
	313MR2B	**19.1**	63	178,300	189	180 to 250	N320TC to N360TC	17,200	21,600	4,520	763,820
	313MR2C	**16.8**	71	143,500	172	180 to 250	N320TC to N360TC	16,600	20,800	4,340	929,329
	313MR2C	**22.0**	55	187,000	172	180 to 250	N320TC to N360TC	18,000	22,500	4,740	929,329
	313MR2C	**26.4**	45	221,400	169	180 to 250	N320TC to N360TC	19,000	23,800	5,040	929,329
	313MR3	**53.7**	22.4	194,200	76	132 to 200	N250TC to N280TC	23,500	29,400	6,380	929,329
	313MR3	**64.0**	18.7	231,800	76	132 to 200	N250TC to N280TC	24,700	31,000	6,770	929,329
	313MR3	**69.9**	17.2	253,100	75	132 to 200	N250TC to N280TC	25,400	31,800	6,970	929,329
	313MR3	**82.2**	14.6	297,400	76	132 to 200	N250TC to N280TC	26,700	33,400	7,360	929,329
	313MR3	**97.5**	12.3	353,000	76	132 to 200	N250TC to N280TC	28,100	35,200	7,790	929,329
	313MR3	**107**	11.2	356,700	69	132 to 200	N250TC to N280TC	28,900	36,200	8,040	929,329
	313MR3	**127**	9.4	368,000	60	132 to 200	N250TC to N280TC	29,900	37,400	8,510	929,329
	313MR3	**153**	7.8	267,500	36	132 to 200	N250TC to N280TC	29,900	37,400	9,050	929,329
	313MR4	**185**	6.5	290,900	34	71 to 160	N56C to N280TC	29,900	37,400	9,640	929,329
	313MR4	**201**	6.0	316,200	34	71 to 160	N56C to N280TC	29,900	37,400	9,910	929,329
	313MR4	**237**	5.1	373,400	34	71 to 160	N56C to N280TC	29,900	37,400	10,500	929,329
	313MR4	**281**	4.3	424,500	32	71 to 160	N56C to N280TC	30,600	38,300	11,100	929,329
	313MR4	**309**	3.9	399,100	27.8	71 to 160	N56C to N280TC	31,000	38,800	11,400	929,329
	313MR4	**346**	3.5	499,800	31	71 to 160	N56C to N280TC	31,500	39,400	11,900	929,329
	313MR4	**387**	3.1	415,200	23.0	71 to 160	N56C to N280TC	32,000	40,100	12,300	929,329
	313MR4	**450**	2.7	426,300	20.4	71 to 160	N56C to N280TC	32,700	40,900	13,000	929,329
	313MR4	**496**	2.4	431,200	18.7	71 to 160	N56C to N280TC	33,100	41,500	13,400	929,329
	313MR4	**535**	2.2	439,200	17.7	71 to 160	N56C to N280TC	33,500	41,900	13,700	929,329
	313MR4	**647**	1.9	454,000	15.1	71 to 160	N56C to N280TC	34,400	43,100	14,600	929,329
	313MR4	**778**	1.5	329,000	9.1	71 to 160	N56C to N280TC	35,300	44,300	15,600	929,329

314M R

429

713,720 lb•in

n_1 rpm		i	n_2 rpm	T_{n2} lb•in	P_{n1} hp	P (IEC)	NEMA	Rn_2 [lbs] NHC/NPC	HZ/PZ	FZ	$T_{n2\ max}$ lb•in
1800	**314MR3B**	**51.1**	35	327,800	174	180 to 250	N320TC to N360TC	20,000	24,400	6,170	1,017,836
	314MR3B	**65.5**	27.5	420,600	174	180 to 250	N320TC to N360TC	21,500	26,300	6,710	1,017,836
	314MR3B	**77.8**	23.1	448,400	174	180 to 250	N320TC to N360TC	22,700	27,700	7,100	1,017,836
	314MR3B	**82.3**	21.9	468,200	174	180 to 250	N320TC to N360TC	23,100	28,100	7,230	1,017,836
	314MR3B	**97.6**	18.4	498,700	160	180 to 250	N320TC to N360TC	24,300	29,600	7,660	1,017,836
	314MR3B	**113**	15.9	419,500	116	180 to 250	N320TC to N360TC	25,400	31,000	8,050	1,017,836
	314MR3C	**70.7**	25.5	413,800	174	180 to 250	N320TC to N360TC	22,000	26,900	6,880	1,017,836
	314MR3C	**90.7**	19.8	514,400	174	180 to 250	N320TC to N360TC	23,700	29,000	7,470	1,017,836
	314MR3C	**108**	16.7	477,200	139	180 to 250	N320TC to N360TC	25,000	30,500	7,910	1,017,836
	314MR3C	**114**	15.8	507,800	140	180 to 250	N320TC to N360TC	25,400	31,000	8,060	1,017,836
	314MR3C	**135**	13.3	514,300	119	180 to 250	N320TC to N360TC	26,800	32,700	8,540	1,017,836
	314MR3C	**157**	11.5	419,500	84	180 to 250	N320TC to N360TC	28,000	34,200	8,970	1,017,836
	314MR4	**160**	11.2	223,800	45	71 to 160	N250TC to N280TC	28,200	34,400	9,040	1,017,836
	314MR4	**189**	9.5	264,300	45	71 to 160	N250TC to N280TC	29,200	35,600	9,550	1,017,836
	314MR4	**238**	7.6	331,600	45	71 to 160	N250TC to N280TC	29,200	35,600	10,300	1,017,836

314M R	429	713,720 lb•in

n_1 rpm		i	n_2 rpm	T_{n2} lb•in	P_{n1} hp	P (IEC)	NEMA	Rn_2 [lbs] NHC/NPC	HZ/PZ	FZ	$T_{n2\ max}$ lb•in
1800	**314MR4**	**276**	6.5	385,500	45	71 to 160	N250TC to N280TC	29,200	35,600	10,800	1,017,836
	314MR4	**354**	5.1	494,800	45	71 to 160	N250TC to N280TC	29,200	35,600	11,800	1,017,836
	314MR4	**421**	4.3	581,200	45	71 to 160	N250TC to N280TC	29,800	36,400	12,500	1,017,836
	314MR4	**445**	4.0	496,700	36	71 to 160	N250TC to N280TC	30,100	36,700	12,700	1,017,836
	314MR4	**528**	3.4	564,200	34	71 to 160	N250TC to N280TC	30,800	37,600	13,400	1,017,836
	314MR4	**614**	2.9	465,200	24.4	71 to 160	N250TC to N280TC	31,500	38,400	14,100	1,017,836
1200	**314MR3B**	**51.1**	23.5	370,100	151	180 to 250	N320TC to N360TC	22,600	27,500	7,060	1,017,836
	314MR3B	**65.5**	18.3	475,000	151	180 to 250	N320TC to N360TC	24,300	29,700	7,680	1,017,836
	314MR3B	**77.8**	15.4	484,600	130	180 to 250	N320TC to N360TC	25,600	31,200	8,130	1,017,836
	314MR3B	**82.3**	14.6	498,500	126	180 to 250	N320TC to N360TC	26,000	31,800	8,280	1,017,836
	314MR3B	**97.6**	12.3	518,300	111	180 to 250	N320TC to N360TC	27,400	33,400	8,770	1,017,836
	314MR3B	**113**	10.6	419,500	77	180 to 250	N320TC to N360TC	28,700	35,000	9,220	1,017,836
	314MR3C	**70.7**	17.0	467,300	138	180 to 250	N320TC to N360TC	24,900	30,400	7,870	1,017,836
	314MR3C	**90.7**	13.2	579,800	133	180 to 250	N320TC to N360TC	26,800	32,700	8,560	1,017,836
	314MR3C	**108**	11.1	515,700	100	180 to 250	N320TC to N360TC	28,200	34,500	9,060	1,017,836
	314MR3C	**114**	10.5	526,100	96	180 to 250	N320TC to N360TC	28,700	35,000	9,230	1,017,836
	314MR3C	**135**	8.9	532,400	82	180 to 250	N320TC to N360TC	29,200	35,600	9,770	1,017,836
	314MR3C	**157**	7.6	421,400	56	180 to 250	N320TC to N360TC	29,200	35,600	10,300	1,017,836
	314MR4	**160**	7.5	252,800	34	71 to 160	N250TC to N280TC	29,200	35,600	10,300	1,017,836
	314MR4	**189**	6.3	298,400	34	71 to 160	N250TC to N280TC	29,200	35,600	10,900	1,017,836
	314MR4	**238**	5.1	374,500	34	71 to 160	N250TC to N280TC	29,200	35,600	11,800	1,017,836
	314MR4	**276**	4.3	435,400	34	71 to 160	N250TC to N280TC	29,700	36,300	12,400	1,017,836
	314MR4	**354**	3.4	558,700	34	71 to 160	N250TC to N280TC	30,800	37,600	13,500	1,017,836
	314MR4	**421**	2.9	638,400	33	71 to 160	N250TC to N280TC	31,600	38,600	14,300	1,017,836
	314MR4	**445**	2.7	561,100	27.1	71 to 160	N250TC to N280TC	31,800	38,900	14,500	1,017,836
	314MR4	**528**	2.3	602,500	24.5	71 to 160	N250TC to N280TC	32,600	39,800	15,400	1,017,836
	314MR4	**614**	2.0	498,800	17.5	71 to 160	N250TC to N280TC	33,300	40,700	16,200	1,017,836

315M R	445	892,160 lb•in

n_1 rpm		i	n_2 rpm	T_{n2} lb•in	P_{n1} hp	P (IEC)	NEMA	Rn_2 [lbs] NHC/NPC	HZ/PZ	FZ	$T_{n2\ max}$ lb•in
1800	**315MR3B**	**51.1**	35	409,700	201	180 to 250	N320TC to N360TC	20,000	24,400	6,170	1,194,851
	315MR3B	**65.5**	27.5	525,800	201	180 to 250	N320TC to N360TC	21,500	26,300	6,710	1,194,851
	315MR3B	**77.8**	23.1	618,200	201	180 to 250	N320TC to N360TC	22,700	27,700	7,100	1,194,851
	315MR3B	**82.3**	21.9	585,200	201	180 to 250	N320TC to N360TC	23,100	28,100	7,230	1,194,851
	315MR3B	**97.6**	18.4	627,100	201	180 to 250	N320TC to N360TC	24,300	29,600	7,660	1,194,851
	315MR3B	**113**	15.9	524,400	145	180 to 250	N320TC to N360TC	25,400	31,000	8,050	1,194,851
	315MR3C	**70.7**	25.5	517,200	201	180 to 250	N320TC to N360TC	22,000	26,900	6,880	1,194,851
	315MR3C	**90.7**	19.8	650,500	201	180 to 250	N320TC to N360TC	23,700	29,000	7,470	1,194,851
	315MR3C	**108**	16.7	708,900	201	180 to 250	N320TC to N360TC	25,000	30,500	7,910	1,194,851
	315MR3C	**114**	15.8	635,400	175	180 to 250	N320TC to N360TC	25,400	31,000	8,060	1,194,851
	315MR3C	**135**	13.3	644,700	149	180 to 250	N320TC to N360TC	26,800	32,700	8,540	1,194,851
	315MR3C	**157**	11.5	524,400	104	180 to 250	N320TC to N360TC	28,000	34,200	8,970	1,194,851
	315MR4	**225**	8.0	700,200	100	132 to 200	N250TC to N280TC	29,200	35,600	10,100	1,194,851
	315MR4	**269**	6.7	795,200	95	132 to 200	N250TC to N280TC	29,200	35,600	10,700	1,194,851
	315MR4	**345**	5.2	834,200	78	132 to 200	N250TC to N280TC	29,200	35,600	11,700	1,194,851
	315MR4	**409**	4.4	837,500	66	132 to 200	N250TC to N280TC	29,700	36,200	12,300	1,194,851
	315MR4	**525**	3.4	837,500	51	132 to 200	N250TC to N280TC	30,800	37,600	13,400	1,194,851
	315MR4	**623**	2.9	837,500	43	132 to 200	N250TC to N280TC	31,500	38,500	14,200	1,194,851
	315MR4	**659**	2.7	739,200	36	132 to 200	N250TC to N280TC	31,800	38,800	14,500	1,194,851
	315MR4	**782**	2.3	752,300	31	132 to 200	N250TC to N280TC	32,600	39,800	15,300	1,194,851
	315MR4	**909**	2.0	622,200	22.1	132 to 200	N250TC to N280TC	33,300	40,600	16,100	1,194,851
1200	**315MR3B**	**51.1**	23.5	462,700	189	180 to 250	N320TC to N360TC	22,600	27,500	7,060	1,194,851

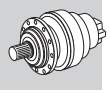

B

315M R

445

892,160 lb•in

n_1 rpm		i	n_2 rpm	T_{n2} lb•in	P_{n1} hp	P (IEC)	NEMA	Rn_2 [lbs] NHC/NPC	HZ/PZ	FZ	$T_{n2\ max}$ lb•in
1200	**315MR3B**	**65.5**	18.3	593,800	189	180 to 250	N320TC to N360TC	24,300	29,700	7,680	1,194,851
	315MR3B	**77.8**	15.4	694,700	186	180 to 250	N320TC to N360TC	25,600	31,200	8,130	1,194,851
	315MR3B	**82.3**	14.6	623,200	158	180 to 250	N320TC to N360TC	26,000	31,800	8,280	1,194,851
	315MR3B	**97.6**	12.3	649,200	139	180 to 250	N320TC to N360TC	27,400	33,400	8,770	1,194,851
	315MR3B	**113**	10.6	524,400	96	180 to 250	N320TC to N360TC	28,700	35,000	9,220	1,194,851
	315MR3C	**70.7**	17.0	584,200	172	180 to 250	N320TC to N360TC	24,900	30,400	7,870	1,194,851
	315MR3C	**90.7**	13.2	728,200	167	180 to 250	N320TC to N360TC	26,800	32,700	8,560	1,194,851
	315MR3C	**108**	11.1	769,900	149	180 to 250	N320TC to N360TC	28,200	34,500	9,060	1,194,851
	315MR3C	**114**	10.5	657,800	120	180 to 250	N320TC to N360TC	28,700	35,000	9,230	1,194,851
	315MR3C	**135**	8.9	665,500	103	180 to 250	N320TC to N360TC	29,200	35,600	9,770	1,194,851
	315MR3C	**157**	7.6	526,700	70	180 to 250	N320TC to N360TC	29,200	35,600	10,300	1,194,851
	315MR4	**225**	5.3	790,800	76	132 to 200	N250TC to N280TC	29,200	35,600	11,600	1,194,851
	315MR4	**269**	4.5	837,500	67	132 to 200	N250TC to N280TC	29,600	36,200	12,300	1,194,851
	315MR4	**345**	3.5	837,500	52	132 to 200	N250TC to N280TC	30,700	37,500	13,400	1,194,851
	315MR4	**409**	2.9	837,500	44	132 to 200	N250TC to N280TC	31,500	38,400	14,100	1,194,851
	315MR4	**525**	2.3	842,700	35	132 to 200	N250TC to N280TC	32,600	39,800	15,400	1,194,851
	315MR4	**623**	1.9	852,700	29.4	132 to 200	N250TC to N280TC	33,400	40,800	16,300	1,194,851
	315MR4	**659**	1.8	768,400	25.1	132 to 200	N250TC to N280TC	33,700	41,100	16,600	1,194,851
	315MR4	**782**	1.5	780,400	21.5	132 to 200	N250TC to N280TC	34,500	42,100	17,500	1,194,851
	315MR4	**909**	1.3	667,200	15.8	132 to 200	N250TC to N280TC	35,300	43,000	18,400	1,194,851

316M R

461

1,189,450 lb•in

n_1 rpm		i	n_2 rpm	T_{n2} lb•in	P_{n1} hp	P (IEC)	NEMA	Rn_2 [lbs] HC/PC	HZ/PZ	FZ	$T_{n2\ max}$ lb•in
1800	**316MR3B**	**51.1**	35	409,700	201	180 to 250	N320TC to N360TC	31,100	34,900	10,300	1,699,344
	316MR3B	**64.1**	28.1	514,100	201	180 to 250	N320TC to N360TC	33,300	37,400	11,100	1,699,344
	316MR3B	**65.5**	27.5	525,800	201	180 to 250	N320TC to N360TC	33,500	37,600	11,200	1,699,344
	316MR3B	**77.8**	23.1	623,900	201	180 to 250	N320TC to N360TC	35,300	39,600	11,800	1,699,344
	316MR3B	**82.3**	21.9	659,800	201	180 to 250	N320TC to N360TC	35,900	40,300	12,100	1,699,344
	316MR3B	**97.6**	18.4	751,800	201	180 to 250	N320TC to N360TC	37,800	42,400	12,800	1,699,344
	316MR3C	**70.7**	25.5	517,200	201	180 to 250	N320TC to N360TC	34,300	38,500	11,500	1,699,344
	316MR3C	**88.7**	20.3	649,100	201	180 to 250	N320TC to N360TC	36,700	41,200	12,400	1,699,344
	316MR3C	**90.7**	19.8	663,700	201	180 to 250	N320TC to N360TC	37,000	41,500	12,500	1,699,344
	316MR3C	**108**	16.7	787,900	201	180 to 250	N320TC to N360TC	38,900	43,700	13,200	1,699,344
	316MR3C	**114**	15.8	785,900	201	180 to 250	N320TC to N360TC	39,600	44,400	13,400	1,699,344
	316MR3C	**135**	13.3	837,900	194	180 to 250	N320TC to N360TC	41,700	46,700	14,200	1,699,344
	316MR4	**225**	8.0	700,200	100	132 to 200	N250TC to N280TC	45,400	50,900	16,900	1,699,344
	316MR4	**269**	6.7	835,400	100	132 to 200	N250TC to N280TC	45,400	50,900	17,900	1,699,344
	316MR4	**289**	6.2	898,600	100	132 to 200	N250TC to N280TC	45,400	50,900	18,300	1,699,344
	316MR4	**337**	5.3	879,700	84	132 to 200	N250TC to N280TC	45,400	50,900	19,300	1,699,344
	316MR4	**363**	5.0	882,000	78	132 to 200	N250TC to N280TC	45,500	51,000	19,800	1,699,344
	316MR4	**430**	4.2	906,700	68	132 to 200	N250TC to N280TC	46,600	52,300	20,900	1,699,344
	316MR4	**443**	4.1	1,101,300	80	132 to 200	N250TC to N280TC	46,800	52,500	21,100	1,699,344
	316MR4	**525**	3.4	1,106,600	68	132 to 200	N250TC to N280TC	47,900	53,800	22,400	1,699,344
	316MR4	**623**	2.9	1,005,900	52	132 to 200	N250TC to N280TC	49,100	55,100	23,700	1,699,344
	316MR4	**659**	2.7	971,100	48	132 to 200	N250TC to N280TC	49,500	55,500	24,100	1,699,344
	316MR4	**782**	2.3	993,400	41	132 to 200	N250TC to N280TC	50,700	56,900	25,500	1,699,344
1200	**316MR3B**	**51.1**	23.5	462,700	189	180 to 250	N320TC to N360TC	35,100	39,400	11,800	1,699,344
	316MR3B	**64.1**	18.7	580,600	189	180 to 250	N320TC to N360TC	37,600	42,200	12,700	1,699,344
	316MR3B	**65.5**	18.3	593,800	189	180 to 250	N320TC to N360TC	37,900	42,500	12,800	1,699,344
	316MR3B	**77.8**	15.4	704,600	189	180 to 250	N320TC to N360TC	39,900	44,700	13,500	1,699,344
	316MR3B	**82.3**	14.6	745,200	189	180 to 250	N320TC to N360TC	40,500	45,500	13,800	1,699,344
	316MR3B	**97.6**	12.3	835,000	178	180 to 250	N320TC to N360TC	42,700	47,900	14,600	1,699,344

Bonfiglioli Riduttori

316M R

461

1,189,450 lb•in

n_1 rpm		i	n_2 rpm	T_{n2} lb•in	P_{n1} hp	P (IEC)	NEMA	Rn_2 [lbs] HC/PC	HZ/PZ	FZ	$T_{n2\ max}$ lb•in
1200	**316MR3C**	**70.7**	17.0	584,100	172	180 to 250	N320TC to N360TC	38,700	43,500	13,100	1,699,344
	316MR3C	**88.7**	13.5	733,100	172	180 to 250	N320TC to N360TC	41,500	46,500	14,200	1,699,344
	316MR3C	**90.7**	13.2	749,600	172	180 to 250	N320TC to N360TC	41,800	46,800	14,300	1,699,344
	316MR3C	**108**	11.1	889,900	172	180 to 250	N320TC to N360TC	44,000	49,300	15,100	1,699,344
	316MR3C	**114**	10.5	869,500	159	180 to 250	N320TC to N360TC	44,700	50,100	15,400	1,699,344
	316MR3C	**135**	8.9	880,900	136	180 to 250	N320TC to N360TC	45,400	50,900	16,300	1,699,344
	316MR4	**225**	5.3	790,700	76	132 to 200	N250TC to N280TC	45,400	50,900	19,300	1,699,344
	316MR4	**269**	4.5	942,600	75	132 to 200	N250TC to N280TC	46,200	51,800	20,500	1,699,344
	316MR4	**289**	4.2	999,500	74	132 to 200	N250TC to N280TC	46,600	52,300	21,000	1,699,344
	316MR4	**337**	3.6	930,600	59	132 to 200	N250TC to N280TC	47,700	53,500	22,100	1,699,344
	316MR4	**363**	3.3	941,600	56	132 to 200	N250TC to N280TC	48,200	54,000	22,600	1,699,344
	316MR4	**430**	2.8	967,900	48	132 to 200	N250TC to N280TC	49,400	55,400	24,000	1,699,344
	316MR4	**443**	2.7	1,114,000	54	132 to 200	N250TC to N280TC	49,600	55,600	24,200	1,699,344
	316MR4	**525**	2.3	1,123,600	46	132 to 200	N250TC to N280TC	50,800	57,000	25,600	1,699,344
	316MR4	**623**	1.9	1,017,000	35	132 to 200	N250TC to N280TC	52,000	58,400	27,100	1,699,344
	316MR4	**659**	1.8	1,017,400	33	132 to 200	N250TC to N280TC	52,500	58,900	27,600	1,699,344
	316MR4	**782**	1.5	1,035,300	28.5	132 to 200	N250TC to N280TC	53,800	60,300	29,200	1,699,344

317M R

473

1,836,440 lb•in

n_1 rpm		i	n_2 rpm	T_{n2} lb•in	P_{n1} hp	P (IEC)	NEMA	Rn_2 [lbs] HC/PC	HZ/PZ	FZ	$T_{n2\ max}$ lb•in
1800	**317MR3B**	**49.8**	36	399,400	201	180 to 250	N320TC to N360TC	48,100	51,000	10,200	3,478,345
	317MR3B	**64.9**	27.7	520,500	201	180 to 250	N320TC to N360TC	52,000	55,300	11,100	3,478,345
	317MR3B	**78.1**	23.0	626,500	201	180 to 250	N320TC to N360TC	55,000	58,400	11,800	3,478,345
	317MR3B	**83.3**	21.6	668,000	201	180 to 250	N320TC to N360TC	56,100	59,600	12,100	3,478,345
	317MR3B	**100**	18.0	804,100	201	180 to 250	N320TC to N360TC	59,300	63,000	12,900	3,478,345
	317MR3B	**119**	15.1	900,800	201	180 to 250	N320TC to N360TC	62,400	66,300	13,600	3,478,345
	317MR3C	**68.9**	26.1	504,200	201	180 to 250	N320TC to N360TC	53,000	56,300	11,400	3,478,345
	317MR3C	**89.8**	20.0	657,200	201	180 to 250	N320TC to N360TC	57,400	60,900	12,400	3,478,345
	317MR3C	**108**	16.6	791,200	201	180 to 250	N320TC to N360TC	60,600	64,400	13,200	3,478,345
	317MR3C	**115**	15.6	843,300	201	180 to 250	N320TC to N360TC	61,800	65,700	13,500	3,478,345
	317MR3C	**139**	13.0	1,015,400	201	180 to 250	N320TC to N360TC	65,400	69,400	14,400	3,478,345
	317MR3C	**165**	10.9	985,000	187	180 to 250	N320TC to N360TC	68,800	73,100	15,200	3,478,345
	317MR4	**220**	8.2	682,500	100	132 to 200	N250TC to N280TC	70,700	75,100	16,700	3,478,345
	317MR4	**262**	6.9	814,400	100	132 to 200	N250TC to N280TC	70,700	75,100	17,700	3,478,345
	317MR4	**336**	5.4	1,045,100	100	132 to 200	N250TC to N280TC	70,700	75,100	19,300	3,478,345
	317MR4	**399**	4.5	1,240,400	100	132 to 200	N250TC to N280TC	71,700	76,200	20,400	3,478,345
	317MR4	**438**	4.1	1,336,300	98	132 to 200	N250TC to N280TC	72,700	77,200	21,100	3,478,345
	317MR4	**520**	3.5	1,463,500	91	132 to 200	N250TC to N280TC	74,500	79,100	22,300	3,478,345
	317MR4	**626**	2.9	1,073,600	55	132 to 200	N250TC to N280TC	76,500	81,200	23,700	3,478,345
	317MR4	**677**	2.7	1,374,600	66	132 to 200	N250TC to N280TC	77,300	82,100	24,300	3,478,345
	317MR4	**803**	2.2	1,380,300	55	132 to 200	N250TC to N280TC	79,200	84,200	25,800	3,478,345
	317MR4	**953**	1.9	1,193,000	40	132 to 200	N250TC to N280TC	81,200	86,300	27,300	3,478,345
1200	**317MR3B**	**49.8**	24.1	451,000	189	180 to 250	N320TC to N360TC	54,300	57,700	11,700	3,478,345
	317MR3B	**64.9**	18.5	587,800	189	180 to 250	N320TC to N360TC	58,800	62,400	12,800	3,478,345
	317MR3B	**78.1**	15.4	707,600	189	180 to 250	N320TC to N360TC	62,100	66,000	13,600	3,478,345
	317MR3B	**83.3**	14.4	754,400	189	180 to 250	N320TC to N360TC	63,300	67,300	13,900	3,478,345
	317MR3B	**100**	12.0	908,100	189	180 to 250	N320TC to N360TC	66,900	71,100	14,700	3,478,345
	317MR3B	**119**	10.1	997,600	175	180 to 250	N320TC to N360TC	70,500	74,900	15,600	3,478,345
	317MR3C	**68.9**	17.4	569,400	172	180 to 250	N320TC to N360TC	59,800	63,600	13,000	3,478,345
	317MR3C	**89.8**	13.4	742,200	172	180 to 250	N320TC to N360TC	64,800	68,800	14,200	3,478,345
	317MR3C	**108**	11.1	893,500	172	180 to 250	N320TC to N360TC	68,500	72,800	15,100	3,478,345
	317MR3C	**115**	10.4	952,400	172	180 to 250	N320TC to N360TC	69,800	74,200	15,400	3,478,345

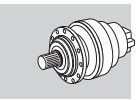

B

317M R

473

1,836,440 lb•in

n_1 rpm		i	n_2 rpm	T_{n2} lb•in	P_{n1} hp	P (IEC)	NEMA	Rn_2 [lbs] HC/PC	HZ/PZ	FZ	$T_{n2\ max}$ lb•in
1200	**317MR3C**	**139**	8.6	1,140,800	171	180 to 250	N320TC to N360TC	70,700	75,100	16,400	3,478,345
	317MR3C	**165**	7.3	1,004,500	127	180 to 250	N320TC to N360TC	70,700	75,100	17,400	3,478,345
	317MR4	**220**	5.5	770,800	76	132 to 200	N250TC to N280TC	70,700	75,100	19,100	3,478,345
	317MR4	**262**	4.6	919,700	76	132 to 200	N250TC to N280TC	71,500	76,000	20,300	3,478,345
	317MR4	**336**	3.6	1,180,300	76	132 to 200	N250TC to N280TC	74,100	78,800	22,100	3,478,345
	317MR4	**399**	3.0	1,400,900	76	132 to 200	N250TC to N280TC	76,000	80,700	23,400	3,478,345
	317MR4	**438**	2.7	1,450,500	71	132 to 200	N250TC to N280TC	77,000	81,800	24,100	3,478,345
	317MR4	**520**	2.3	1,487,100	62	132 to 200	N250TC to N280TC	78,900	83,800	25,500	3,478,345
	317MR4	**626**	1.9	1,085,000	37	132 to 200	N250TC to N280TC	81,000	86,100	27,100	3,478,345
	317MR4	**677**	1.8	1,380,300	44	132 to 200	N250TC to N280TC	81,900	87,000	27,900	3,478,345
	317MR4	**803**	1.5	1,380,200	37	132 to 200	N250TC to N280TC	84,000	89,200	29,500	3,478,345
	317MR4	**953**	1.3	1,278,600	28.8	132 to 200	N250TC to N280TC	86,000	91,400	31,200	3,478,345

318M R

485

2,633,540 lb•in

n_1 rpm		i	n_2 rpm	T_{n2} lb•in	P_{n1} hp	P (IEC)	NEMA	Rn_2 [lbs] HC/PC	HZ/PZ	FZ	$T_{n2\ max}$ lb•in
1800	**318MR4B**	**225**	8.0	1,748,600	201	180 to 250	N320TC to N360TC	72,100	75,900	22,500	4,425,375
	318MR4B	**288**	6.2	2,017,600	201	180 to 250	N320TC to N360TC	72,100	75,900	24,400	4,425,375
	318MR4B	**342**	5.3	2,045,900	193	180 to 250	N320TC to N360TC	72,100	75,900	25,900	4,425,375
	318MR4B	**362**	5.0	2,052,900	183	180 to 250	N320TC to N360TC	72,100	76,000	26,300	4,425,375
	318MR4B	**430**	4.2	2,113,200	159	180 to 250	N320TC to N360TC	73,900	77,800	27,900	4,425,375
	318MR4B	**499**	3.6	2,150,400	139	180 to 250	N320TC to N360TC	75,500	79,500	29,300	4,425,375
	318MR4C	**311**	5.8	2,012,500	201	180 to 250	N320TC to N360TC	72,100	75,900	25,000	4,425,375
	318MR4C	**399**	4.5	2,087,300	169	180 to 250	N320TC to N360TC	73,100	77,000	27,200	4,425,375
	318MR4C	**474**	3.8	2,148,600	146	180 to 250	N320TC to N360TC	75,000	78,900	28,800	4,425,375
	318MR4C	**501**	3.6	2,168,900	140	180 to 250	N320TC to N360TC	75,600	79,600	29,400	4,425,375
	318MR4C	**595**	3.0	2,232,600	121	180 to 250	N320TC to N360TC	77,400	81,500	31,100	4,425,375
	318MR4C	**691**	2.6	2,253,900	105	180 to 250	N320TC to N360TC	79,100	83,300	32,700	4,425,375
1200	**318MR4B**	**225**	5.3	1,974,900	189	180 to 250	N320TC to N360TC	72,100	75,900	25,700	4,425,375
	318MR4B	**288**	4.2	2,115,700	158	180 to 250	N320TC to N360TC	74,000	77,900	28,000	4,425,375
	318MR4B	**342**	3.5	2,177,900	137	180 to 250	N320TC to N360TC	75,800	79,800	29,600	4,425,375
	318MR4B	**362**	3.3	2,198,500	131	180 to 250	N320TC to N360TC	76,400	80,500	30,200	4,425,375
	318MR4B	**430**	2.8	2,263,100	113	180 to 250	N320TC to N360TC	78,300	82,500	31,900	4,425,375
	318MR4B	**499**	2.4	2,270,400	98	180 to 250	N320TC to N360TC	80,000	84,300	33,600	4,425,375
	318MR4C	**311**	3.9	2,143,000	148	180 to 250	N320TC to N360TC	74,800	78,800	28,700	4,425,375
	318MR4C	**399**	3.0	2,235,300	120	180 to 250	N320TC to N360TC	77,500	81,600	31,200	4,425,375
	318MR4C	**474**	2.5	2,300,900	104	180 to 250	N320TC to N360TC	79,400	83,600	33,000	4,425,375
	318MR4C	**501**	2.4	2,320,300	100	180 to 250	N320TC to N360TC	80,100	84,300	33,600	4,425,375
	318MR4C	**595**	2.0	2,378,700	86	180 to 250	N320TC to N360TC	82,000	86,400	35,600	4,425,375
	318MR4C	**691**	1.7	2,297,000	71	180 to 250	N320TC to N360TC	83,800	88,300	37,400	4,425,375

319 R

497

4,170,380 lb•in

n_1 rpm		i	n_2 rpm	T_{n2} lb•in	P_{n1} hp	P (IEC)	NEMA	Rn_2 [lbs] HC/PC	HZ/PZ	FZ	$T_{n2\ max}$ lb•in
1800	**319R4B**	**249**	7.2	1,937,200	201	180 to 250	N320TC to N360TC	81,700	89,900	23,300	6,018,510
	319R4B	**320**	5.6	2,486,100	201	180 to 250	N320TC to N360TC	81,700	89,900	25,300	6,018,510
	319R4B	**379**	4.7	2,803,300	201	180 to 250	N320TC to N360TC	82,300	90,600	26,800	6,018,510
	319R4B	**401**	4.5	2,850,600	201	180 to 250	N320TC to N360TC	82,900	91,300	27,300	6,018,510
	319R4B	**475**	3.8	2,524,900	172	180 to 250	N320TC to N360TC	85,000	93,500	28,800	6,018,510

319 R

497

4,170,380 lb•in

n_1 rpm		i	n_2 rpm	T_{n2} lb•in	P_{n1} hp	P (IEC)	NEMA	Rn_2 [lbs] HC/PC	HZ/PZ	FZ	$T_{n2\ max}$ lb•in
1800	319R4B	563	3.2	2,598,000	149	180 to 250	N320TC to N360TC	87,100	95,900	30,500	6,018,510
	319R4B	655	2.7	2,664,100	131	180 to 250	N320TC to N360TC	89,000	97,900	32,100	6,018,510
	319R4C	345	5.2	2,445,800	201	180 to 250	N320TC to N360TC	81,700	89,900	25,900	6,018,510
	319R4C	442	4.1	2,935,800	201	180 to 250	N320TC to N360TC	84,100	92,600	28,200	6,018,510
	319R4C	525	3.4	3,090,600	190	180 to 250	N320TC to N360TC	86,200	94,900	29,800	6,018,510
	319R4C	555	3.2	3,142,800	183	180 to 250	N320TC to N360TC	86,900	95,700	30,400	6,018,510
	319R4C	657	2.7	2,665,600	131	180 to 250	N320TC to N360TC	89,000	98,000	32,100	6,018,510
	319R4C	780	2.3	2,742,800	113	180 to 250	N320TC to N360TC	91,200	100,400	34,000	6,018,510
	319R4C	906	2.0	2,772,300	99	180 to 250	N320TC to N360TC	93,200	102,600	35,800	6,018,510
1200	319R4B	249	4.8	2,187,800	189	180 to 250	N320TC to N360TC	82,100	90,400	26,600	6,018,510
	319R4B	320	3.8	2,807,600	189	180 to 250	N320TC to N360TC	85,100	93,700	28,900	6,018,510
	319R4B	379	3.2	3,165,900	180	180 to 250	N320TC to N360TC	87,200	96,000	30,600	6,018,510
	319R4B	401	3.0	3,219,300	173	180 to 250	N320TC to N360TC	87,900	96,800	31,200	6,018,510
	319R4B	475	2.5	2,701,500	122	180 to 250	N320TC to N360TC	90,000	99,100	33,000	6,018,510
	319R4B	563	2.1	2,779,700	106	180 to 250	N320TC to N360TC	92,300	101,600	34,900	6,018,510
	319R4B	655	1.8	2,795,500	92	180 to 250	N320TC to N360TC	94,300	103,800	36,700	6,018,510
	319R4C	345	3.5	2,762,100	172	180 to 250	N320TC to N360TC	86,000	94,700	29,700	6,018,510
	319R4C	442	2.7	3,315,500	161	180 to 250	N320TC to N360TC	89,100	98,100	32,200	6,018,510
	319R4C	525	2.3	3,445,700	141	180 to 250	N320TC to N360TC	91,300	100,600	34,100	6,018,510
	319R4C	555	2.2	3,510,100	136	180 to 250	N320TC to N360TC	92,100	101,400	34,800	6,018,510
	319R4C	657	1.8	2,851,900	93	180 to 250	N320TC to N360TC	94,300	103,800	36,800	6,018,510
	319R4C	780	1.5	2,934,600	81	180 to 250	N320TC to N360TC	96,600	106,400	38,900	6,018,510
	319R4C	906	1.3	2,891,800	69	180 to 250	N320TC to N360TC	98,700	108,700	40,900	6,018,510

321 R

509

5,803,790 lb•in

n_1 rpm		i	n_2 rpm	T_{n2} lb•in	P_{n1} hp	P (IEC)	NEMA	Rn_2 [lbs] HC/PC	HZ/PZ	FZ	$T_{n2\ max}$ lb•in
1800	321R4B	221	8.1	1,717,700	201	180 to 250	N320TC to N360TC	115,500	137,500	143,800	8,266,601
	321R4B	288	6.2	2,219,300	201	180 to 250	N320TC to N360TC	115,500	137,500	155,700	8,266,601
	321R4B	347	5.2	2,686,800	201	180 to 250	N320TC to N360TC	115,500	137,500	164,700	8,266,601
	321R4B	370	4.9	2,839,400	201	180 to 250	N320TC to N360TC	116,000	138,100	167,800	8,266,601
	321R4B	446	4.0	3,444,300	201	180 to 250	N320TC to N360TC	119,100	141,800	177,400	8,266,601
	321R4B	529	3.4	4,065,500	201	180 to 250	N320TC to N360TC	122,100	145,300	186,800	8,266,601
	321R4C	306	5.9	2,086,800	201	180 to 250	N320TC to N360TC	115,500	137,500	158,600	8,266,601
	321R4C	399	4.5	2,720,100	201	180 to 250	N320TC to N360TC	117,300	139,600	171,700	8,266,601
	321R4C	481	3.7	3,274,200	201	180 to 250	N320TC to N360TC	120,400	143,300	181,500	8,266,601
	321R4C	512	3.5	3,490,800	201	180 to 250	N320TC to N360TC	121,500	144,600	185,100	8,266,601
	321R4C	617	2.9	4,201,800	201	180 to 250	N320TC to N360TC	124,800	148,500	195,600	8,266,601
	321R4C	732	2.5	4,581,400	201	180 to 250	N320TC to N360TC	127,900	152,200	206,000	8,266,601
1200	321R4B	221	5.4	1,952,900	190	180 to 250	N320TC to N360TC	115,500	137,500	162,400	8,266,601
	321R4B	288	4.2	2,530,100	189	180 to 250	N320TC to N360TC	118,600	141,200	175,900	8,266,601
	321R4B	347	3.5	3,031,700	188	180 to 250	N320TC to N360TC	121,800	145,000	186,000	8,266,601
	321R4B	370	3.2	3,258,300	189	180 to 250	N320TC to N360TC	122,900	146,300	189,600	8,266,601
	321R4B	446	2.7	3,860,500	186	180 to 250	N320TC to N360TC	126,200	150,200	200,400	8,266,601
	321R4B	529	2.3	4,482,500	182	180 to 250	N320TC to N360TC	129,300	153,900	211,000	8,266,601
	321R4C	306	3.9	2,356,700	165	180 to 250	N320TC to N360TC	119,600	142,400	179,100	8,266,601
	321R4C	399	3.0	3,071,800	165	180 to 250	N320TC to N360TC	124,200	147,900	193,900	8,266,601
	321R4C	481	2.5	3,697,500	165	180 to 250	N320TC to N360TC	127,600	151,900	205,000	8,266,601
	321R4C	512	2.3	3,942,400	165	180 to 250	N320TC to N360TC	128,800	153,300	209,000	8,266,601
	321R4C	617	1.9	4,746,400	165	180 to 250	N320TC to N360TC	132,200	157,400	220,900	8,266,601
	321R4C	732	1.6	4,655,400	137	180 to 250	N320TC to N360TC	135,500	161,300	232,600	8,266,601

25.5 3/V_M - PLANETARYWORM RATING CHARTS

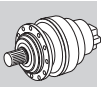

Reading the rating chart.

3/V 13 ML4 | 417 (11) | **539,360 lb•in** (1)

n_1 rpm		i	n_2 rpm	T_{n2} lb•in	P_{n1} hp	P (IEC)	NEMA	Rn_2 [lbs] NHC/NPC	HZ/PZ	FZ
						B5 / B14				
1800	**3/V 13 ML4**	2773	**0.65**	522,600	7.7	80 to 132	N140TC to N210TC	40,000	50,100	18,000
	3/V 13 ML4	3263	**0.55**	479,200	5.5	80 to 132	N140TC to N210TC	40,900	51,300	18,000
	3/V 13 ML4	3515	**0.51**	505,600	5.4	80 to 132	N140TC to N210TC	41,400	51,800	18,000
	3/V 13 ML4	4046	**0.44**	539,400	5.4	80 to 132	N140TC to N210TC	42,200	51,900	18,000
	3/V 13 ML4	4536	**0.40**	505,600	4.5	80 to 132	N140TC to N210TC	42,900	51,900	18,000

(2) (3) (4) (5) (6) (7) (8) (9) (10)

1	Reference torque
2	Gearbox drive speed
3	Frame size of combined worm + planetary gearbox
4	Gear ratio
5	Gearbox output speed
6	Gearbox rated output torque based on: - service factor f_S=1 - 10000 h theoretical lifetime
7	Gearbox rated input power, based on: - service factor f_S=1 - 10000 h theoretical lifetime
8	Frame size of compatible IEC electric motor.
9	Frame size of compatible NEMA electric motor.
10	Permitted overhung loading on output shaft, based on: - service factor f_S=1 - 10000 h theoretical lifetime - speed of output n_2 For forces not applied at shaft middlepoint, see diagrams provided in the specific gearbox overall dimensioning pages
11	Dimensions page

3/V 00 L3 — 241 — 11,060 lb•in

n_1 rpm		i	n_2 rpm	T_{n2} lb•in	P_{n1} hp	P (IEC)	NEMA	Rn_2 [lbs] NHC/NPC	HZ/PZ	FZ
						B5 / B14				
1800	3/V 00 L3	415	4.3	8,620	0.89	63 to 80	N56C	4,540	5,740	1,100
	3/V 00 L3	436	4.1	6,460	0.67	63 to 71	N56C	4,570	5,780	1,120
	3/V 00 L3	509	3.5	8,920	0.75	63 to 80	N56C	4,680	5,910	1,180
	3/V 00 L3	562	3.2	6,200	0.47	63 to 80	N56C	4,740	5,990	1,220
	3/V 00 L3	654	2.8	9,320	0.65	63 to 71	N56C	4,850	6,120	1,280
	3/V 00 L3	689	2.6	9,400	0.58	63 to 80	N56C	4,880	6,170	1,310
	3/V 00 L3	818	2.2	9,680	0.57	63 to 71	N56C	5,000	6,320	1,380
	3/V 00 L3	903	2.0	6,730	0.36	63 to 71	N56C	5,080	6,410	1,430
	3/V 00 L3	997	1.8	6,850	0.28	63 to 80	N56C	5,150	6,500	1,480
	3/V 00 L3	1107	1.6	10,200	0.44	63 to 71	N56C	5,230	6,600	1,530
	3/V 00 L3	1198	1.5	7,080	0.27	63 to 71	N56C	5,290	6,670	1,570
	3/V 00 L3	1381	1.3	10,600	0.37	63 to 71	N56C	5,390	6,810	1,650
	3/V 00 L3	1495	1.2	7,360	0.22	63 to 71	N56C	5,460	6,890	1,690
	3/V 00 L3	1869	0.96	7,610	0.20	63 to 71	N56C	5,630	7,110	1,800
	3/V 00 L3	2337	0.77	7,610	0.16	63 to 71	N56C	5,810	7,340	1,800

3/V 01 L3 — 257 — 21,770 lb•in

n_1 rpm		i	n_2 rpm	T_{n2} lb•in	P_{n1} hp	P (IEC)	NEMA	Rn_2 [lbs] NHC/NPC	HZ/PZ	FZ
						B5 / B14				
1800	3/V 01 L3	430	4.2	16,600	1.44	63 to 80	N56C	4,570	5,420	1,120
	3/V 01 L3	443	4.1	12,100	1.06	63 to 80	N56C	4,580	5,440	1,130
	3/V 01 L3	509	3.5	11,200	0.94	63 to 80	N56C	4,680	5,550	1,180
	3/V 01 L3	562	3.2	12,400	0.94	63 to 80	N56C	4,740	5,630	1,220
	3/V 01 L3	654	2.8	10,400	0.72	63 to 71	N56C	4,850	5,750	1,280
	3/V 01 L3	689	2.6	15,200	0.94	63 to 80	N56C	4,880	5,800	1,310
	3/V 01 L3	799	2.3	13,200	0.67	63 to 80	N56C	4,990	5,920	1,370
	3/V 01 L3	903	2.0	10,900	0.58	63 to 71	N56C	5,080	6,030	1,430
	3/V 01 L3	997	1.8	13,700	0.56	63 to 80	N56C	5,150	6,110	1,480
	3/V 01 L3	1105	1.6	17,600	0.72	63 to 71	N56C	5,220	6,200	1,530
	3/V 01 L3	1198	1.5	14,200	0.54	63 to 71	N56C	5,290	6,270	1,570
	3/V 01 L3	1381	1.3	16,600	0.58	63 to 71	N56C	5,390	6,400	1,650
	3/V 01 L3	1495	1.2	14,700	0.45	63 to 71	N56C	5,460	6,470	1,690
	3/V 01 L3	1869	0.96	15,200	0.39	63 to 71	N56C	5,630	6,680	1,800
	3/V 01 L3	2337	0.77	15,200	0.31	63 to 71	N56C	5,810	6,900	1,800

3/V 03 L3 — 273 — 26,290 lb•in

n_1 rpm		i	n_2 rpm	T_{n2} lb•in	P_{n1} hp	P (IEC)	NEMA	Rn_2 [lbs] NHC/NPC	HZ/PZ	FZ
						B5 / B14				
1800	3/V 03 L3	395	4.6	19,600	1.9	71 to 90	N56C to N140TC	8,660	10,900	3,250
	3/V 03 L3	460	3.9	20,400	1.8	71 to 90	N56C to N140TC	8,850	11,200	3,420
	3/V 03 L3	502	3.6	17,300	1.3	71 to 90	N56C to N140TC	8,960	11,300	3,530
	3/V 03 L3	544	3.3	24,100	1.8	71 to 90	N56C to N140TC	9,060	11,400	3,620
	3/V 03 L3	623	2.9	19,600	1.3	71 to 90	N56C to N140TC	9,240	11,700	3,790
	3/V 03 L3	736	2.4	23,900	1.3	71 to 90	N56C to N140TC	9,460	12,000	4,000
	3/V 03 L3	793	2.3	18,700	0.97	71 to 90	N56C to N140TC	9,560	12,100	4,110
	3/V 03 L3	923	2.0	23,100	1.0	71 to 90	N56C to N140TC	9,770	12,300	4,320
	3/V 03 L3	1023	1.8	23,400	1.0	71 to 80	N56C	9,920	12,500	4,470
	3/V 03 L3	1189	1.5	20,100	0.77	71 to 80	N56C	10,100	12,800	4,700
	3/V 03 L3	1385	1.3	24,400	0.80	71 to 80	N56C	10,400	13,100	4,940
	3/V 03 L3	1610	1.1	21,200	0.60	71 to 80	N56C	10,600	13,400	5,200
	3/V 03 L3	1728	1.0	25,100	0.66	71 to 80	N56C	10,700	13,500	5,320
	3/V 03 L3	2009	0.90	21,600	0.49	71 to 80	N56C	10,900	13,800	5,400
	3/V 03 L3	2511	0.72	20,400	0.37	71 to 80	N56C	11,300	14,200	5,400

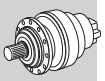

B

3/V 04 L3 — 291 — 35,050 lb•in

n_1 rpm		i	n_2 rpm	T_{n2} lb•in	P_{n1} hp	P (IEC)	NEMA	Rn_2 [lbs] NHC/NPC	HZ/PZ	FZ
						B5				
1800	3/V 04 L3	384	4.7	31,000	3.1	71 to 112	N56C to N180TC	8,620	10,900	3,220
	3/V 04 L3	453	4.0	32,800	2.8	71 to 112	N56C to N180TC	8,830	11,200	3,410
	3/V 04 L3	501	3.6	26,600	2.2	71 to 112	N56C to N180TC	8,960	11,300	3,520
	3/V 04 L3	568	3.2	27,200	1.8	71 to 112	N56C to N180TC	9,120	11,500	3,670
	3/V 04 L3	623	2.9	31,100	2.0	71 to 112	N56C to N180TC	9,240	11,700	3,790
	3/V 04 L3	710	2.5	22,600	1.1	71 to 112	N56C to N180TC	9,410	11,900	3,960
	3/V 04 L3	769	2.3	28,600	1.4	71 to 112	N56C to N180TC	9,520	12,000	4,060
	3/V 04 L3	887	2.0	23,500	0.95	71 to 112	N56C to N180TC	9,720	12,300	4,260
	3/V 04 L3	981	1.8	33,800	1.5	71 to 112	N56C to N180TC	9,860	12,500	4,410
	3/V 04 L3	1152	1.6	30,600	1.0	71 to 112	N56C to N180TC	10,100	12,700	4,650
	3/V 04 L3	1231	1.5	31,000	1.1	71 to 112	N56C to N180TC	10,200	12,900	4,750
	3/V 04 L3	1419	1.3	25,500	0.71	71 to 112	N56C to N180TC	10,400	13,100	4,980
	3/V 04 L3	1536	1.2	32,200	0.88	71 to 112	N56C to N180TC	10,500	13,300	5,120
	3/V 04 L3	1774	1.0	26,500	0.59	71 to 112	N56C to N180TC	10,700	13,600	5,370
	3/V 04 L3	1893	0.95	26,600	0.59	71 to 112	N56C to N180TC	10,800	13,700	5,400
	3/V 04 L3	2366	0.76	26,600	0.47	71 to 112	N56C to N180TC	11,200	14,100	5,400

3/V 05 L3 — 309 — 51,330 lb•in

n_1 rpm		i	n_2 rpm	T_{n2} lb•in	P_{n1} hp	P (IEC)	NEMA	Rn_2 [lbs] NHC/NPC	HZ/PZ	FZ
						B5				
1800	3/V 05 L3	396	4.5	32,300	2.9	71 to 112	N56C to N180TC	8,660	10,900	3,260
	3/V 05 L3	462	3.9	41,300	3.2	71 to 112	N56C to N180TC	8,850	11,200	3,430
	3/V 05 L3	529	3.4	33,800	2.3	71 to 112	N56C to N180TC	9,020	11,400	3,590
	3/V 05 L3	576	3.1	42,100	2.6	71 to 112	N56C to N180TC	9,140	11,500	3,690
	3/V 05 L3	623	2.9	39,300	2.5	71 to 112	N56C to N180TC	9,240	11,700	3,790
	3/V 05 L3	715	2.5	35,400	1.8	71 to 112	N56C to N180TC	9,420	11,900	3,970
	3/V 05 L3	793	2.3	36,000	1.8	71 to 112	N56C to N180TC	9,560	12,100	4,110
	3/V 05 L3	894	2.0	36,800	1.6	71 to 112	N56C to N180TC	9,730	12,300	4,270
	3/V 05 L3	1057	1.7	37,800	1.5	71 to 112	N56C to N180TC	9,960	12,600	4,520
	3/V 05 L3	1116	1.6	38,200	1.3	71 to 112	N56C to N180TC	10,000	12,700	4,600
	3/V 05 L3	1231	1.5	47,400	1.6	71 to 112	N56C to N180TC	10,200	12,900	4,750
	3/V 05 L3	1431	1.3	39,900	1.2	71 to 112	N56C to N180TC	10,400	13,100	5,000
	3/V 05 L3	1674	1.1	38,900	0.92	71 to 112	N56C to N180TC	10,600	13,400	5,270
	3/V 05 L3	1786	1.0	41,500	0.98	71 to 112	N56C to N180TC	10,700	13,600	5,380
	3/V 05 L3	2232	0.81	39,200	0.74	71 to 112	N56C to N180TC	11,100	14,000	5,400

3/V 06 L3 — 327 — 95,940 lb•in

n_1 rpm		i	n_2 rpm	T_{n2} lb•in	P_{n1} hp	P (IEC)	NEMA	Rn_2 [lbs] NHC/NPC	HZ/PZ	FZ
						B5				
1800	3/V 06 L3	395	4.6	67,200	6.1	71 to 112	N56C to N180TC	11,900	15,000	4,750
	3/V 06 L3	427	4.2	75,600	6.3	71 to 112	N56C to N180TC	12,000	15,200	4,870
	3/V 06 L3	527	3.4	67,200	4.6	71 to 112	N56C to N180TC	12,400	15,600	5,220
	3/V 06 L3	569	3.2	75,800	4.8	71 to 112	N56C to N180TC	12,500	15,800	5,360
	3/V 06 L3	661	2.7	81,600	4.5	71 to 112	N56C to N180TC	12,800	16,100	5,640
	3/V 06 L3	698	2.6	64,900	3.3	71 to 112	N56C to N180TC	12,900	16,300	5,740
	3/V 06 L3	791	2.3	67,400	3.4	71 to 112	N56C to N180TC	13,100	16,600	5,980
	3/V 06 L3	930	1.9	67,900	2.6	71 to 112	N56C to N180TC	13,400	16,900	6,310
	3/V 06 L3	992	1.8	83,300	3.4	71 to 112	N56C to N180TC	13,600	17,100	6,450
	3/V 06 L3	1153	1.6	70,700	2.4	71 to 112	N56C to N180TC	13,900	17,500	6,780
	3/V 06 L3	1212	1.5	68,700	2.4	71 to 112	N56C to N180TC	14,000	17,600	6,900
	3/V 06 L3	1395	1.3	72,300	2.1	71 to 112	N56C to N180TC	14,200	18,000	7,230
	3/V 06 L3	1768	1.0	76,100	1.8	71 to 112	N56C to N180TC	14,700	18,600	7,820
	3/V 06 L3	2139	0.84	75,200	1.5	71 to 112	N56C to N180TC	15,100	19,100	7,870
	3/V 06 L3	2588	0.70	62,000	1.0	71 to 112	N56C to N180TC	15,600	19,600	7,870

3/V 07 L3 — 345 — 138,780 lb•in

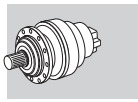

n_1 rpm		i	n_2 rpm	T_{n2} lb•in	P_{n1} hp	P (IEC)	NEMA	Rn_2 [lbs] NHC/NPC	HZ/PZ	FZ
						B5 / B14				
1800	3/V 07 L3	386	4.7	77,800	7.0	80 to 132	N140TC to N210TC	14,800	20,200	6,060
	3/V 07 L3	460	3.9	108,900	8.5	80 to 132	N140TC to N210TC	15,200	20,700	6,420
	3/V 07 L3	507	3.5	120,400	8.6	80 to 132	N140TC to N210TC	15,400	21,000	6,630
	3/V 07 L3	655	2.8	127,200	7.7	80 to 132	N140TC to N210TC	16,000	21,700	7,220
	3/V 07 L3	761	2.4	124,300	6.4	80 to 132	N140TC to N210TC	16,300	22,200	7,590
	3/V 07 L3	773	2.3	85,900	4.0	80 to 132	N140TC to N210TC	16,400	22,300	7,630
	3/V 07 L3	920	2.0	108,900	4.7	80 to 132	N140TC to N210TC	16,800	22,800	8,090
	3/V 07 L3	1015	1.8	126,200	5.0	80 to 132	N140TC to N210TC	17,000	23,100	8,360
	3/V 07 L3	1159	1.6	91,200	3.1	80 to 132	N140TC to N210TC	17,300	23,600	8,740
	3/V 07 L3	1288	1.4	124,100	4.0	80 to 132	N140TC to N210TC	17,600	24,000	9,050
	3/V 07 L3	1411	1.3	108,900	3.2	80 to 132	N140TC to N210TC	17,800	24,300	9,330
	3/V 07 L3	1545	1.2	95,200	2.5	80 to 132	N140TC to N210TC	18,100	24,600	9,610
	3/V 07 L3	1964	0.92	108,900	2.4	80 to 132	N140TC to N210TC	18,700	25,400	10,100
	3/V 07 L3	2150	0.84	97,400	1.9	80 to 132	N140TC to N210TC	18,900	25,800	10,100
	3/V 07 L3	2472	0.73	97,400	1.7	80 to 132	N140TC to N210TC	19,300	26,300	10,100

B

3/V 09 L3 — 363 — 205,690 lb•in

n_1 rpm		i	n_2 rpm	T_{n2} lb•in	P_{n1} hp	P (IEC)	NEMA	Rn_2 [lbs] NHC/NPC	HZ/PZ	FZ
						B5				
1800	3/V 09 L3	370	4.9	115,100	11.8	100 to 132	—	14,700	20,000	4,780
	3/V 09 L3	442	4.1	156,900	13.5	100 to 132	—	15,100	20,600	5,070
	3/V 09 L3	507	3.5	126,600	9.0	100 to 132	—	15,400	21,000	5,310
	3/V 09 L3	655	2.8	154,900	9.0	100 to 132	—	16,000	21,700	5,780
	3/V 09 L3	761	2.4	126,800	6.3	100 to 132	—	16,300	22,200	6,070
	3/V 09 L3	800	2.3	188,500	9.3	100 to 132	—	16,500	22,400	6,180
	3/V 09 L3	840	2.1	172,800	7.8	100 to 132	—	16,600	22,500	6,280
	3/V 09 L3	1004	1.8	158,100	6.2	100 to 132	—	17,000	23,100	6,660
	3/V 09 L3	1159	1.6	138,900	4.5	100 to 132	—	17,300	23,600	6,990
	3/V 09 L3	1288	1.4	184,700	5.7	100 to 132	—	17,600	24,000	7,240
	3/V 09 L3	1497	1.2	161,600	4.3	100 to 132	—	18,000	24,500	7,610
	3/V 09 L3	1623	1.1	129,500	3.4	100 to 132	—	18,200	24,800	7,820
	3/V 09 L3	1792	1.0	194,400	4.6	100 to 132	—	18,500	25,100	8,080
	3/V 09 L3	2150	0.84	150,500	2.8	100 to 132	—	18,900	25,800	8,090
	3/V 09 L3	2472	0.73	150,500	2.6	100 to 132	—	19,300	26,300	8,090

3/V 10 ML3 — 379 — 297,740 lb•in

n_1 rpm		i	n_2 rpm	T_{n2} lb•in	P_{n1} hp	P (IEC)	NEMA	Rn_2 [lbs] NHC/NPC	HZ/PZ	FZ
						B5				
1800	3/V 10 ML3	436	4.1	236,200	19.6	132 to 160	—	17,700	22,900	9,110
	3/V 10 ML3	507	3.5	220,000	15.7	132 to 160	—	18,100	23,400	9,580
	3/V 10 ML3	560	3.2	217,100	14.0	132 to 160	—	18,300	23,700	9,900
	3/V 10 ML3	614	2.9	171,100	10.1	132 to 160	—	18,600	24,000	10,200
	3/V 10 ML3	701	2.6	179,300	8.9	132 to 160	—	18,900	24,500	10,700
	3/V 10 ML3	773	2.3	182,400	8.5	132 to 160	—	19,200	24,800	11,000
	3/V 10 ML3	920	2.0	171,400	7.1	100 to 132	—	19,700	25,400	11,700
	3/V 10 ML3	1004	1.8	279,200	11.0	100 to 132	—	19,900	25,700	12,000
	3/V 10 ML3	1120	1.6	245,200	8.6	100 to 132	—	20,300	26,100	12,500
	3/V 10 ML3	1227	1.5	171,900	5.5	100 to 132	—	20,500	26,500	12,900
	3/V 10 ML3	1411	1.3	172,100	4.8	100 to 132	—	20,900	27,000	13,500

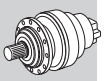

B

3/V 10 ML4 | 381 | 297,740 lb•in

n_1 rpm		i	n_2 rpm	T_{n2} lb•in	P_{n1} hp	P (IEC)	NEMA	Rn_2 [lbs] NHC/NPC	HZ/PZ	FZ
						B5				
1800	3/V 10 ML4	1617	1.10	248,400	5.7	71 to 112	N56C to N180TC	21,300	27,600	14,100
	3/V 10 ML4	1855	0.97	239,700	4.8	71 to 112	N56C to N180TC	21,800	28,100	14,600
	3/V 10 ML4	2016	0.89	260,500	4.8	71 to 112	N56C to N180TC	22,000	28,400	14,600
	3/V 10 ML4	2156	0.83	248,400	4.3	71 to 112	N56C to N180TC	22,200	28,700	14,600
	3/V 10 ML4	2455	0.73	240,300	3.6	71 to 112	N56C to N180TC	22,700	29,200	14,600
	3/V 10 ML4	2987	0.60	266,500	3.3	71 to 112	N56C to N180TC	23,300	30,100	14,600
	3/V 10 ML4	3273	0.55	240,300	2.7	71 to 112	N56C to N180TC	23,600	30,500	14,600
	3/V 10 ML4	3570	0.50	266,500	3.1	71 to 112	N56C to N180TC	23,900	30,900	14,600
	3/V 10 ML4	4036	0.45	266,500	2.5	71 to 112	N56C to N180TC	24,300	31,400	14,600
	3/V 10 ML4	4637	0.39	266,500	2.5	71 to 112	N56C to N180TC	24,800	32,000	14,600
	3/V 10 ML4	4959	0.36	248,400	2.1	71 to 112	N56C to N180TC	25,000	32,300	14,600

3/V 11 ML3 | 397 | 435,550 lb•in

n_1 rpm		i	n_2 rpm	T_{n2} lb•in	P_{n1} hp	P (IEC)	NEMA	Rn_2 [lbs] NHC/NPC	HZ/PZ	FZ
						B5				
1800	3/V 11 ML3	430	4.2	334,900	27.8	160 to 180	—	22,100	23,100	9,060
	3/V 11 ML3	510	3.5	283,400	19.9	160 to 180	—	22,600	23,600	9,600
	3/V 11 ML3	551	3.3	349,800	22.7	160 to 180	—	22,900	23,900	9,850
	3/V 11 ML3	644	2.8	354,100	20.1	132 to 160	—	23,400	24,400	10,400
	3/V 11 ML3	720	2.5	366,400	19.8	132 to 160	—	23,800	24,800	10,800
	3/V 11 ML3	827	2.2	374,500	16.6	132 to 160	—	24,300	25,300	11,300
	3/V 11 ML3	900	2.0	366,600	16.3	100 to 132	—	24,500	25,600	11,600
	3/V 11 ML3	1004	1.8	316,300	12.9	100 to 132	—	24,900	26,000	12,000
	3/V 11 ML3	1103	1.6	391,800	13.8	132 to 160	—	25,300	26,400	12,400
	3/V 11 ML3	1274	1.4	291,600	9.1	100 to 132	—	25,800	26,900	13,000
	3/V 11 ML3	1378	1.3	405,800	11.8	100 to 132	—	26,100	27,200	13,400
	3/V 11 ML3	1636	1.1	365,000	8.9	100 to 132	—	26,700	27,900	14,200
	3/V 11 ML3	1963	0.92	365,100	7.6	100 to 132	—	27,400	28,600	14,600
	3/V 11 ML3	2329	0.77	322,800	5.7	100 to 132	—	28,100	29,400	14,600

3/V 11 ML4 | 399 | 435,550 lb•in

n_1 rpm		i	n_2 rpm	T_{n2} lb•in	P_{n1} hp	P (IEC)	NEMA	Rn_2 [lbs] NHC/NPC	HZ/PZ	FZ
						B5 / B14				
1800	3/V 11 ML4	2663	0.68	423,200	5.9	80 to 132	N140TC to N210TC	28,700	29,900	14,600
	3/V 11 ML4	3063	0.59	423,200	5.2	80 to 132	N140TC to N210TC	29,200	30,500	14,600
	3/V 11 ML4	3222	0.56	423,200	4.9	80 to 132	N140TC to N210TC	29,500	30,700	14,600
	3/V 11 ML4	3557	0.51	374,700	4.5	80 to 132	N140TC to N210TC	29,900	31,200	14,600
	3/V 11 ML4	4106	0.44	432,600	4.5	80 to 132	N140TC to N210TC	30,500	31,800	14,600
	3/V 11 ML4	4410	0.41	423,200	3.9	80 to 132	N140TC to N210TC	30,800	32,200	14,600
	3/V 11 ML4	5326	0.34	423,200	3.3	80 to 132	N140TC to N210TC	31,600	33,000	14,600

3/V 13 ML3 — 415 — 539,360 lb•in

n_1 rpm		i	n_2 rpm	T_{n2} lb•in	P_{n1} hp	P (IEC)	NEMA	Rn_2 [lbs] NHC/NPC	HZ/PZ	FZ
						B5				
1800	3/V 13 ML3	370	4.9	350,000	34	160 to 180	—	30,000	37,600	10,600
	3/V 13 ML3	425	4.2	393,200	32	160 to 180	—	30,600	38,300	11,100
	3/V 13 ML3	516	3.5	430,500	29.8	160 to 180	—	31,500	39,400	11,900
	3/V 13 ML3	567	3.2	413,400	26.0	160 to 180	—	31,900	39,900	12,200
	3/V 13 ML3	673	2.7	425,900	22.6	160 to 180	—	32,700	40,900	13,000
	3/V 13 ML3	741	2.4	405,500	21.3	132 to 160	—	33,100	41,500	13,400
	3/V 13 ML3	810	2.2	308,600	13.6	160 to 180	—	33,500	42,000	13,800
	3/V 13 ML3	870	2.1	476,300	21.3	132 to 160	—	33,900	42,400	14,100
	3/V 13 ML3	1009	1.8	457,100	16.6	132 to 160	—	34,600	43,300	14,800
	3/V 13 ML3	1088	1.7	452,800	16.6	100 to 132	—	35,000	43,800	15,200
	3/V 13 ML3	1291	1.4	442,600	13.7	100 to 132	—	35,900	44,900	16,100
	3/V 13 ML3	1418	1.3	485,000	13.7	100 to 132	—	36,300	45,500	16,600
	3/V 13 ML3	1620	1.1	348,400	8.4	132 to 160	—	37,000	46,400	17,400
	3/V 13 ML3	1682	1.1	499,700	11.9	100 to 132	—	37,200	46,600	17,600
	3/V 13 ML3	2019	0.89	505,600	10.3	100 to 132	—	38,200	47,900	18,000
	3/V 13 ML3	2430	0.74	354,900	6.0	100 to 132	—	39,200	49,100	18,000

3/V 13 ML4 — 417 — 539,360 lb•in

n_1 rpm		i	n_2 rpm	T_{n2} lb•in	P_{n1} hp	P (IEC)	NEMA	Rn_2 [lbs] NHC/NPC	HZ/PZ	FZ
						B5 / B14				
1800	3/V 13 ML4	2773	0.65	522,600	7.7	80 to 132	N140TC to N210TC	40,000	50,100	18,000
	3/V 13 ML4	3263	0.55	479,200	5.5	80 to 132	N140TC to N210TC	40,900	51,300	18,000
	3/V 13 ML4	3515	0.51	505,600	5.4	80 to 132	N140TC to N210TC	41,400	51,800	18,000
	3/V 13 ML4	4046	0.44	539,400	5.4	80 to 132	N140TC to N210TC	42,200	51,900	18,000
	3/V 13 ML4	4536	0.40	505,600	4.5	80 to 132	N140TC to N210TC	42,900	51,900	18,000
	3/V 13 ML4	5046	0.36	449,700	3.8	80 to 132	N140TC to N210TC	43,200	51,900	18,000

3/V 14 ML3 — 433 — 713,720 lb•in

n_1 rpm		i	n_2 rpm	T_{n2} lb•in	P_{n1} hp	P (IEC)	NEMA	Rn_2 [lbs] NHC/NPC	HZ/PZ	FZ
						B5				
1800	3/V 14 ML3	397	4.5	407,900	35	160 to 180	—	29,600	36,100	12,200
	3/V 14 ML3	446	4.0	421,800	34	160 to 180	—	30,100	36,700	12,700
	3/V 14 ML3	498	3.6	511,900	35	160 to 180	—	30,500	37,300	13,200
	3/V 14 ML3	579	3.1	460,600	27.4	160 to 180	—	31,200	38,100	13,900
	3/V 14 ML3	665	2.7	591,900	32	160 to 180	—	31,800	38,800	14,500
	3/V 14 ML3	695	2.6	380,800	21.3	132 to 160	—	32,000	39,100	14,700
	3/V 14 ML3	794	2.3	436,600	20.1	132 to 160	—	32,600	39,800	15,400
	3/V 14 ML3	893	2.0	488,700	21.3	132 to 160	—	33,200	40,500	16,000
	3/V 14 ML3	997	1.8	547,900	20.1	132 to 160	—	33,700	41,200	16,600
	3/V 14 ML3	1116	1.6	464,500	16.6	100 to 132	—	34,300	41,800	17,300
	3/V 14 ML3	1324	1.4	540,300	16.3	100 to 132	—	35,100	42,900	18,300
	3/V 14 ML3	1339	1.3	421,800	12.9	100 to 132	—	35,200	42,900	18,300
	3/V 14 ML3	1589	1.1	500,600	12.9	100 to 132	—	36,000	44,000	19,400
	3/V 14 ML3	1662	1.1	644,100	15.5	100 to 132	—	36,300	44,300	19,700
	3/V 14 ML3	1994	0.90	628,200	12.9	100 to 132	—	37,200	45,400	20,200
	3/V 14 ML3	2318	0.78	559,900	9.9	100 to 132	—	38,000	46,400	20,200

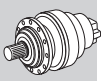

B

3/V 14 ML4 | 434 | 713,720 lb•in

n_1 rpm		i	n_2 rpm	T_{n2} lb•in	P_{n1} hp	P (IEC)	NEMA	Rn_2 [lbs] NHC/NPC	HZ/PZ	FZ
						B5				
1800	3/V 14 ML4	2504	0.72	713,700	11.6	100 to 132	—	38,500	46,900	20,200
	3/V 14 ML4	2782	0.65	713,700	10.0	100 to 132	—	39,000	47,700	20,200
	3/V 14 ML4	3182	0.57	690,600	8.2	100 to 132	—	39,800	48,600	20,200
	3/V 14 ML4	3472	0.52	648,800	7.0	132 to 160	—	40,300	49,200	20,200
	3/V 14 ML4	3993	0.45	648,800	6.1	100 to 132	—	41,100	50,200	20,200
	3/V 14 ML4	4312	0.42	713,700	6.7	100 to 132	—	41,600	50,700	20,200
	3/V 14 ML4	4959	0.36	713,700	5.8	100 to 132	—	42,400	51,800	20,200

3/V 15 ML3 | 449 | 892,160 lb•in

n_1 rpm		i	n_2 rpm	T_{n2} lb•in	P_{n1} hp	P (IEC)	NEMA	Rn_2 [lbs] NHC/NPC	HZ/PZ	FZ
						B5				
1800	3/V 15 ML3	386	4.7	536,900	47	132 to 225	—	29,500	35,900	12,100
	3/V 15 ML3	446	4.0	576,000	46	132 to 225	—	30,100	36,700	12,700
	3/V 15 ML3	498	3.6	715,700	50	132 to 225	—	30,500	37,300	13,200
	3/V 15 ML3	560	3.2	722,800	46	132 to 225	—	31,100	37,900	13,700
	3/V 15 ML3	665	2.7	739,900	40	132 to 225	—	31,800	38,800	14,500
	3/V 15 ML3	840	2.1	711,100	31	132 to 225	—	32,900	40,200	15,700
	3/V 15 ML3	997	1.8	769,000	28.2	132 to 225	—	33,700	41,200	16,600
	3/V 15 ML3	1120	1.6	777,100	27.0	132 to 225	—	34,300	41,900	17,300
	3/V 15 ML3	1329	1.4	789,100	23.1	132 to 225	—	35,100	42,900	18,300
	3/V 15 ML3	1400	1.3	769,400	21.9	132 to 225	—	35,400	43,200	18,600
	3/V 15 ML3	1662	1.1	805,200	19.4	132 to 225	—	36,300	44,300	19,700
	3/V 15 ML3	1994	0.90	811,000	16.9	132 to 225	—	37,200	45,400	20,200
	3/V 15 ML3	2318	0.78	699,800	12.6	132 to 225	—	38,000	46,400	20,200

3/V 15 ML4 | 450 | 892,160 lb•in

n_1 rpm		i	n_2 rpm	T_{n2} lb•in	P_{n1} hp	P (IEC)	NEMA	Rn_2 [lbs] NHC/NPC	HZ/PZ	FZ
						B5				
1800	3/V 15 ML4	2780	0.65	892,200	12.0	132 to 160	—	39,000	47,700	20,200
	3/V 15 ML4	3300	0.55	892,200	10.1	132 to 160	—	40,000	48,800	20,200
	3/V 15 ML4	3489	0.52	811,000	8.7	132 to 160	—	40,300	49,200	20,200
	3/V 15 ML4	4171	0.43	892,200	8.4	100 to 132	—	41,400	50,500	20,200
	3/V 15 ML4	4950	0.36	892,200	7.0	100 to 132	—	42,400	51,700	20,200
	3/V 15 ML4	5234	0.34	811,000	6.1	100 to 132	—	42,700	52,200	20,200

3/V 16 ML3 | 463 | 1,189,450 lb•in

n_1 rpm		i	n_2 rpm	T_{n2} lb•in	P_{n1} hp	P (IEC)	NEMA	Rn_2 [lbs] HC/PC	HZ/PZ	FZ
						B5				
1800	3/V 16 ML3	397	4.5	882,000	77	132 to 225	—	46,100	51,700	20,400
	3/V 16 ML3	446	4.0	826,800	65	132 to 225	—	46,800	52,500	21,200
	3/V 16 ML3	530	3.4	981,300	65	132 to 225	—	48,000	53,800	22,400
	3/V 16 ML3	669	2.7	743,200	40	132 to 225	—	49,600	55,700	24,200
	3/V 16 ML3	794	2.3	882,000	40	132 to 225	—	50,800	57,000	25,700
	3/V 16 ML3	893	2.0	891,800	38	132 to 225	—	51,700	58,000	26,700
	3/V 16 ML3	1059	1.7	1,022,300	37	132 to 225	—	53,000	59,400	28,300
	3/V 16 ML3	1324	1.4	992,300	29.9	132 to 225	—	54,700	61,400	30,400
	3/V 16 ML3	1589	1.1	992,300	24.9	132 to 225	—	56,100	63,000	32,300

B

3/V 16 ML4 | 464 | 1,189,450 lb•in

n_1 rpm		i	n_2 rpm	T_{n2} lb•in	P_{n1} hp	P (IEC)	NEMA	Rn_2 [lbs] HC/PC	HZ/PZ	FZ
						B5				
1800	3/V 16 ML4	1785	1.0	937,200	19.6	132 to 160	—	57,100	64,000	33,600
	3/V 16 ML4	1920	0.94	1,008,000	19.6	132 to 160	—	57,700	64,700	33,700
	3/V 16 ML4	2343	0.77	1,189,500	18.9	132 to 160	—	59,300	66,600	33,700
	3/V 16 ML4	2678	0.67	987,700	14.4	100 to 132	—	60,500	67,900	33,700
	3/V 16 ML4	2880	0.63	1,062,400	14.4	100 to 132	—	61,100	68,600	33,700
	3/V 16 ML4	3514	0.51	1,189,500	13.2	100 to 132	—	62,900	70,500	33,700
	3/V 16 ML4	4171	0.43	1,189,500	11.2	100 to 132	—	64,400	72,300	33,700
	3/V 16 ML4	4950	0.36	1,045,400	8.3	100 to 132	—	66,000	74,100	33,700

3/V 17 ML3 | 475 | 1,836,440 lb•in

n_1 rpm		i	n_2 rpm	T_{n2} lb•in	P_{n1} hp	P (IEC)	NEMA	Rn_2 [lbs] HC/PC	HZ/PZ	FZ
						B5				
1800	3/V 17 ML3	405	4.4	1,030,700	86	132 to 225	—	71,900	76,300	20,500
	3/V 17 ML3	425	4.2	944,300	77	132 to 225	—	72,400	76,900	20,800
	3/V 17 ML3	512	3.5	1,136,600	77	132 to 225	—	74,300	78,900	22,200
	3/V 17 ML3	567	3.2	1,050,500	65	132 to 225	—	75,400	80,100	22,900
	3/V 17 ML3	608	3.0	1,104,600	63	132 to 225	—	76,100	80,900	23,500
	3/V 17 ML3	683	2.6	1,264,500	65	132 to 225	—	77,400	82,200	24,400
	3/V 17 ML3	810	2.2	1,160,300	51	132 to 225	—	79,300	84,300	25,800
	3/V 17 ML3	851	2.1	944,300	40	132 to 225	—	79,900	84,900	26,300
	3/V 17 ML3	1024	1.8	1,136,600	40	132 to 225	—	82,000	87,200	27,900
	3/V 17 ML3	1134	1.6	1,133,100	38	132 to 225	—	83,200	88,400	28,900
	3/V 17 ML3	1215	1.5	1,243,500	37	132 to 225	—	84,100	89,300	29,600
	3/V 17 ML3	1365	1.3	1,364,000	38	132 to 225	—	85,500	90,800	30,800

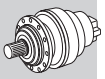

B

3/V 17 ML4 — 476 — 1,836,440 lb•in

n_1 rpm		i	n_2 rpm	T_{n2} lb•in	P_{n1} hp	P (IEC)	NEMA	Rn_2 [lbs] HC/PC	HZ/PZ	FZ
						B5				
1800	3/V 17 ML4	1780	1.0	1,631,500	34	132 to 225	—	88,800	94,300	33,600
	3/V 17 ML4	2065	0.87	1,591,500	27.4	132 to 225	—	90,700	96,300	33,700
	3/V 17 ML4	2485	0.72	1,113,300	15.9	132 to 225	—	93,100	98,900	33,700
	3/V 17 ML4	2773	0.65	1,472,900	21.3	132 to 225	—	94,600	100,500	33,700
	3/V 17 ML4	3168	0.57	1,688,800	20.1	132 to 225	—	96,400	102,400	33,700
	3/V 17 ML4	3583	0.50	1,380,300	14.2	132 to 225	—	98,100	104,200	33,700
	3/V 17 ML4	4129	0.44	1,591,500	14.5	132 to 225	—	99,400	105,700	33,700
	3/V 17 ML4	4449	0.40	1,796,700	16.6	132 to 225	—	99,400	105,700	33,700
	3/V 17 ML4	4970	0.36	1,113,300	8.4	132 to 225	—	99,400	105,700	33,700

3/V 18 ML4 — 487 — 2,633,540 lb•in

n_1 rpm		i	n_2 rpm	T_{n2} lb•in	P_{n1} hp	P (IEC)	NEMA	Rn_2 [lbs] HC/PC	HZ/PZ	FZ
						B5				
1800	3/V 18 ML4	765	2.4	1,637,500	75	132 to 225	—	80,300	84,500	33,800
	3/V 18 ML4	982	1.8	2,101,400	75	132 to 225	—	83,200	87,600	36,700
	3/V 18 ML4	1165	1.5	2,472,500	75	132 to 225	—	85,200	89,800	38,900
	3/V 18 ML4	1232	1.5	2,492,600	71	132 to 225	—	85,900	90,500	39,600
	3/V 18 ML4	1473	1.2	2,260,000	55	132 to 225	—	88,100	92,800	42,100
	3/V 18 ML4	1748	1.0	2,622,300	53	132 to 225	—	90,300	95,100	44,500
	3/V 18 ML4	1848	0.97	2,633,500	51	132 to 225	—	91,000	95,900	45,000
	3/V 18 ML4	2295	0.78	1,884,600	31	132 to 225	—	93,900	98,900	45,000
	3/V 18 ML4	2464	0.73	2,633,500	39	132 to 225	—	94,900	99,900	45,000
	3/V 18 ML4	2945	0.61	2,418,600	31	132 to 225	—	97,300	102,500	45,000
	3/V 18 ML4	3495	0.51	2,633,500	28.4	132 to 225	—	99,700	105,000	45,000
	3/V 18 ML4	3696	0.49	2,633,500	26.9	132 to 225	—	100,500	105,900	45,000
	3/V 18 ML4	4386	0.41	2,633,500	22.6	132 to 225	—	103,000	108,500	45,000
	3/V 18 ML4	5099	0.35	2,342,800	17.3	132 to 225	—	105,300	110,800	45,000

3/V 19 L4 — 499 — 4,170,380 lb•in

n_1 rpm		i	n_2 rpm	T_{n2} lb•in	P_{n1} hp	P (IEC)	NEMA	Rn_2 [lbs] HC/PC	HZ/PZ	FZ
						B5				
1800	3/V 19 L4	2582	0.70	3,232,400	46	132 to 225	—	108,200	119,200	45,000
	3/V 19 L4	3231	0.56	3,153,300	36	132 to 225	—	111,700	123,000	45,000
	3/V 19 L4	4095	0.44	3,362,800	31	132 to 225	—	115,600	127,300	45,000
	3/V 19 L4	4457	0.40	2,977,700	24.6	132 to 225	—	117,000	128,800	45,000
	3/V 19 L4	5164	0.35	3,649,500	28.4	132 to 225	—	119,500	131,600	45,000

3/V 21 L4	511	5,803,790 lb•in

n_1 rpm		i	n_2 rpm	T_{n2} lb•in	P_{n1} hp	P (IEC)	NEMA	Rn_2 [lbs] HC/PC	HZ/PZ	FZ
						B5				
1800	**3/V 21 L4**	**1062**	1.7	3,920,100	127	132 to 225	—	134,800	160,500	230,300
	3/V 21 L4	**1260**	1.4	3,765,600	104	132 to 225	—	138,200	164,500	242,400
	3/V 21 L4	**1517**	1.2	4,532,600	104	132 to 225	—	141,900	168,900	256,300
	3/V 21 L4	**1800**	1.0	4,747,100	92	132 to 225	—	145,400	173,100	269,800
	3/V 21 L4	**1890**	0.95	4,070,900	77	132 to 225	—	146,400	174,300	269,800
	3/V 21 L4	**2275**	0.79	4,900,100	77	132 to 225	—	150,300	179,000	269,800
	3/V 21 L4	**2520**	0.71	4,528,900	65	132 to 225	—	152,600	181,600	269,800
	3/V 21 L4	**2700**	0.67	4,747,100	63	132 to 225	—	154,100	183,400	269,800
	3/V 21 L4	**3600**	0.50	4,747,100	48	132 to 225	—	160,500	191,100	269,800
	3/V 21 L4	**3780**	0.48	4,070,900	40	132 to 225	—	161,700	192,400	269,800
	3/V 21 L4	**4550**	0.40	4,900,100	40	132 to 225	—	166,000	197,600	269,800
	3/V 21 L4	**5040**	0.36	4,885,100	38	132 to 225	—	168,400	200,500	269,800

25.6 3/A - COMBINED UNITS RATING CHARTS

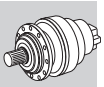

Reading the rating chart.

3/A 01 L2	259	21,770 lb•in

n_1 rpm		i	n_2 rpm	T_{n2} lb•in	P_{n1} hp	P (IEC)	NEMA	Rn_2 [lbs] NHC/NPC	HZ/PZ	FZ
1800	**3/A 01 L2**	18.8	**96**	3,410	5.7	80 to 112	N140TC to N180TC	2,260	2,680	390
	3/A 01 L2	23.0	**78**	4,180	5.7	80 to 112	N140TC to N180TC	2,400	2,850	420
	3/A 01 L2	31.2	**58**	5,650	5.7	80 to 112	N140TC to N180TC	2,630	3,120	470
	3/A 01 L2	35.8	**50**	6,720	5.9	80 to 112	N140TC to N180TC	2,740	3,260	490
	3/A 01 L2	40.1	**45**	5,290	4.1	63 to 112	N56C to N180TC	2,840	3,370	510

1	Reference torque
2	Gearbox drive speed
3	Frame size of combined planetary + bevel helical unit
4	Gear ratio
5	Gearbox output speed
6	Gearbox rated output torque based on: - service factor f_S=1 - 10000 h theoretical lifetime
7	Gearbox rated input power, based on: - service factor f_S=1 - 10000 h theoretical lifetime
8	Frame size of available IEC motor
9	Frame size of available NEMA motor
10	Permitted overhung loading on output shaft, based on: - service factor f_S=1 - 10000 h theoretical lifetime - speed of output n_2 For forces not applied at shaft middlepoint, see diagrams provided in the specific gearbox overall dimensioning pages
11	Dimensions page

3/A 00 L2 | 243 | 11,060 lb•in

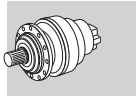

n_1 rpm		i	n_2 rpm	T_{n2} lb•in	P_{n1} hp	P (IEC)	NEMA	Rn_2 [lbs] NHC/NPC	HZ/PZ	FZ
1800	**3/A 00 L2**	**19.1**	94	2,190	3.6	63 to 112	N56C to N180TC	2,270	2,870	400
	3/A 00 L2	**23.4**	77	2,690	3.6	63 to 112	N56C to N180TC	2,420	3,050	420
	3/A 00 L2	**31.7**	57	3,640	3.6	63 to 112	N56C to N180TC	2,640	3,340	470
	3/A 00 L2	**39.6**	45	4,540	3.6	63 to 112	N56C to N180TC	2,830	3,570	500
	3/A 00 L2	**41.5**	43	4,590	3.5	63 to 112	N56C to N180TC	2,870	3,620	510
	3/A 00 L2	**51.8**	35	4,870	2.9	63 to 112	N56C to N180TC	3,060	3,870	550
	3/A 00 L2	**61.2**	29.4	5,750	2.9	63 to 112	N56C to N180TC	3,220	4,070	580
	3/A 00 L2	**71.0**	25.4	5,750	2.5	63 to 112	N56C to N180TC	3,370	4,250	610
	3/A 00 L2	**80.2**	22.4	5,750	2.2	63 to 112	N56C to N180TC	3,490	4,410	640
	3/A 00 L2	**88.6**	20.3	4,870	1.7	63 to 112	N56C to N180TC	3,600	4,540	660
	3/A 00 L2	**100**	18.0	4,870	1.5	63 to 112	N56C to N180TC	3,730	4,710	690
	3/A 00 L2	**107**	16.8	5,750	1.7	63 to 112	N56C to N180TC	3,810	4,810	700
	3/A 00 L2	**134**	13.4	4,870	1.1	63 to 112	N56C to N180TC	4,070	5,140	760
	3/A 00 L2	**171**	10.5	4,870	0.89	63 to 112	N56C to N180TC	4,390	5,540	820
	3/A 00 L2	**203**	8.9	5,750	0.89	63 to 112	N56C to N180TC	4,450	5,620	870
	3/A 00 L2	**219**	8.2	5,500	0.79	63 to 112	N56C to N180TC	4,450	5,620	890
	3/A 00 L2	**253**	7.1	4,870	0.60	63 to 112	N56C to N180TC	4,450	5,620	930
	3/A 00 L2	**296**	6.1	5,750	0.61	63 to 112	N56C to N180TC	4,450	5,620	990
	3/A 00 L2	**319**	5.6	3,880	0.38	63 to 71	N56C	4,450	5,620	1,010
	3/A 00 L2	**369**	4.9	4,880	0.41	63 to 112	N56C to N180TC	4,470	5,640	1,060
	3/A 00 L2	**391**	4.6	4,760	0.38	63 to 71	N56C	4,500	5,690	1,080
	3/A 00 L2	**441**	4.1	5,950	0.42	63 to 71	N56C	4,580	5,790	1,130
	3/A 00 L2	**550**	3.3	5,130	0.29	63 to 71	N56C	4,730	5,970	1,210
	3/A 00 L2	**660**	2.7	5,250	0.25	63 to 71	N56C	4,850	6,130	1,290

B

3/A 01 L2 | 259 | 21,770 lb•in

n_1 rpm		i	n_2 rpm	T_{n2} lb•in	P_{n1} hp	P (IEC)	NEMA	Rn_2 [lbs] NHC/NPC	HZ/PZ	FZ
1800	**3/A 01 L2**	**18.8**	96	3,410	5.7	80 to 112	N140TC to N180TC	2,260	2,680	390
	3/A 01 L2	**23.0**	78	4,180	5.7	80 to 112	N140TC to N180TC	2,400	2,850	420
	3/A 01 L2	**31.2**	58	5,650	5.7	80 to 112	N140TC to N180TC	2,630	3,120	470
	3/A 01 L2	**35.8**	50	6,720	5.9	80 to 112	N140TC to N180TC	2,740	3,260	490
	3/A 01 L2	**40.1**	45	5,290	4.1	63 to 112	N56C to N180TC	2,840	3,370	510
	3/A 01 L2	**43.9**	41	8,230	5.9	80 to 112	N140TC to N180TC	2,920	3,460	520
	3/A 01 L2	**49.1**	37	7,330	4.7	63 to 112	N56C to N180TC	3,010	3,580	540
	3/A 01 L2	**54.2**	33	7,160	4.1	63 to 112	N56C to N180TC	3,110	3,690	560
	3/A 01 L2	**59.4**	30	11,100	5.9	80 to 112	N140TC to N180TC	3,190	3,790	580
	3/A 01 L2	**74.2**	24.3	10,200	4.3	80 to 112	N140TC to N180TC	3,410	4,050	620
	3/A 01 L2	**81.3**	22.1	11,500	4.4	63 to 112	N56C to N180TC	3,510	4,160	640
	3/A 01 L2	**102**	17.7	10,200	3.1	63 to 112	N56C to N180TC	3,750	4,450	690
	3/A 01 L2	**133**	13.5	11,500	2.7	63 to 112	N56C to N180TC	4,070	4,830	760
	3/A 01 L2	**166**	10.8	10,200	1.9	63 to 112	N56C to N180TC	4,350	5,160	810
	3/A 01 L2	**184**	9.8	9,140	1.6	63 to 112	N56C to N180TC	4,450	5,280	840
	3/A 01 L2	**204**	8.8	11,500	1.8	63 to 112	N56C to N180TC	4,450	5,280	870
	3/A 01 L2	**220**	8.2	7,330	1.0	63 to 112	N56C to N180TC	4,450	5,280	890
	3/A 01 L2	**255**	7.1	10,200	1.3	63 to 112	N56C to N180TC	4,450	5,280	940
	3/A 01 L2	**269**	6.7	8,970	1.0	63 to 112	N56C to N180TC	4,450	5,280	950
	3/A 01 L2	**311**	5.8	10,200	1.0	63 to 112	N56C to N180TC	4,450	5,280	1,000
	3/A 01 L2	**364**	4.9	11,500	0.99	63 to 112	N56C to N180TC	4,460	5,290	1,060
	3/A 01 L2	**393**	4.6	7,320	0.58	63 to 71	N56C	4,510	5,350	1,080
	3/A 01 L2	**454**	4.0	10,200	0.70	63 to 112	N56C to N180TC	4,600	5,460	1,140
	3/A 01 L2	**533**	3.4	9,910	0.58	63 to 71	N56C	4,710	5,590	1,200
	3/A 01 L2	**665**	2.7	10,200	0.48	63 to 71	N56C	4,860	5,770	1,290

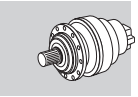

B

3/A 03 L2 — 275 — 26,290 lb•in

n_1 rpm		i	n_2 rpm	T_{n2} lb•in	P_{n1} hp	P (IEC)	NEMA	Rn_2 [lbs] NHC/NPC	HZ/PZ	FZ
1800	**3/A 03 L2**	**19.4**	93	6,810	11.0	80 to 112	N140TC to N180TC	4,380	5,530	1,190
	3/A 03 L2	**23.0**	78	8,040	11.0	80 to 112	N140TC to N180TC	4,610	5,820	1,260
	3/A 03 L2	**28.8**	63	10,100	11.0	80 to 112	N140TC to N180TC	4,930	6,230	1,360
	3/A 03 L2	**33.5**	54	11,700	11.0	80 to 112	N140TC to N180TC	5,160	6,510	1,430
	3/A 03 L2	**40.5**	44	14,200	11.0	80 to 112	N140TC to N180TC	5,460	6,900	1,520
	3/A 03 L2	**43.4**	41	13,100	9.4	80 to 112	N140TC to N180TC	5,580	7,040	1,560
	3/A 03 L2	**52.5**	34	14,600	8.7	80 to 112	N140TC to N180TC	5,900	7,460	1,660
	3/A 03 L2	**62.9**	28.6	13,300	6.6	63 to 112	N56C to N180TC	6,230	7,870	1,760
	3/A 03 L2	**73.2**	24.6	15,500	6.6	63 to 112	N56C to N180TC	6,520	8,240	1,860
	3/A 03 L2	**88.5**	20.3	14,600	5.2	63 to 112	N56C to N180TC	6,900	8,720	1,980
	3/A 03 L2	**96.9**	18.6	15,000	4.8	63 to 112	N56C to N180TC	7,090	8,960	2,040
	3/A 03 L2	**182**	9.9	16,100	2.8	63 to 112	N56C to N180TC	8,540	10,800	2,510
	3/A 03 L2	**220**	8.2	14,600	2.1	63 to 112	N56C to N180TC	8,540	10,800	2,680
	3/A 03 L2	**269**	6.7	16,200	1.9	63 to 112	N56C to N180TC	8,540	10,800	2,860
	3/A 03 L2	**326**	5.5	14,600	1.41	63 to 112	N56C to N180TC	8,540	10,800	3,050
	3/A 03 L2	**352**	5.1	17,800	1.59	63 to 112	N56C to N180TC	8,540	10,800	3,130
	3/A 03 L2	**409**	4.4	16,700	1.28	63 to 112	N56C to N180TC	8,700	11,000	3,290
	3/A 03 L2	**495**	3.6	15,000	0.95	63 to 112	N56C to N180TC	8,940	11,300	3,510
	3/A 03 L2	**574**	3.1	15,200	0.83	63 to 112	N56C to N180TC	9,130	11,500	3,690
	3/A 03 L2	**605**	3.0	16,000	0.83	63 to 112	N56C to N180TC	9,200	11,600	3,750
	3/A 03 L2	**731**	2.5	15,500	0.66	63 to 112	N56C to N180TC	9,450	11,900	4,000

3/A 04 L2 — 293 — 35,050 lb•in

n_1 rpm		i	n_2 rpm	T_{n2} lb•in	P_{n1} hp	P (IEC)	NEMA	Rn_2 [lbs] NHC/NPC	HZ/PZ	FZ
1800	**3/A 04 L2**	**18.7**	96	17,000	28.5	80 to 132	N140TC to N210TC	4,330	5,470	1,180
	3/A 04 L2	**22.1**	81	20,100	28.5	80 to 132	N140TC to N210TC	4,550	5,750	1,240
	3/A 04 L2	**25.6**	70	17,000	20.8	80 to 132	N140TC to N210TC	4,760	6,010	1,310
	3/A 04 L2	**27.7**	65	24,800	28.0	80 to 132	N140TC to N210TC	4,870	6,160	1,340
	3/A 04 L2	**30.2**	60	20,100	20.8	80 to 132	N140TC to N210TC	5,000	6,310	1,380
	3/A 04 L2	**35.3**	51	20,100	17.8	80 to 132	N140TC to N210TC	5,240	6,620	1,450
	3/A 04 L2	**39.1**	46	20,100	16.1	80 to 132	N140TC to N210TC	5,400	6,830	1,510
	3/A 04 L2	**44.3**	41	20,100	14.2	80 to 132	N140TC to N210TC	5,610	7,080	1,570
	3/A 04 L2	**49.7**	36	20,100	12.6	63 to 132	N56C to N210TC	5,810	7,340	1,630
	3/A 04 L2	**54.5**	33	20,100	11.5	80 to 132	N140TC to N210TC	5,970	7,540	1,680
	3/A 04 L2	**62.4**	28.8	25,200	12.6	63 to 132	N56C to N210TC	6,220	7,850	1,760
	3/A 04 L2	**68.4**	26.3	25,200	11.5	80 to 132	N56C to N210TC	6,390	8,070	1,810
	3/A 04 L2	**81.7**	22.0	21,000	8.1	63 to 132	N56C to N210TC	6,740	8,510	1,920
	3/A 04 L2	**90.7**	19.8	21,200	7.3	80 to 132	N140TC to N210TC	6,950	8,780	1,990
	3/A 04 L2	**102**	17.7	22,600	6.9	63 to 132	N56C to N210TC	7,200	9,100	2,070
	3/A 04 L2	**117**	15.4	21,200	5.7	80 to 132	N140TC to N210TC	7,510	9,480	2,170
	3/A 04 L2	**129**	13.9	24,100	5.8	63 to 132	N56C to N210TC	7,730	9,770	2,240
	3/A 04 L2	**149**	12.1	21,200	4.4	63 to 132	N56C to N210TC	8,070	10,200	2,350
	3/A 04 L2	**162**	11.1	25,700	5.0	63 to 132	N56C to N210TC	8,280	10,500	2,420
	3/A 04 L2	**174**	10.4	25,700	4.6	63 to 132	N56C to N180TC	8,450	10,700	2,480
	3/A 04 L2	**205**	8.8	25,700	3.9	63 to 132	N56C to N180TC	8,540	10,800	2,620
	3/A 04 L2	**226**	8.0	31,000	4.3	63 to 132	N56C to N180TC	8,540	10,800	2,700
	3/A 04 L2	**250**	7.2	31,000	3.9	63 to 132	N56C to N180TC	8,540	10,800	2,790
	3/A 04 L2	**283**	6.4	25,200	2.8	63 to 132	N56C to N180TC	8,540	10,800	2,910
	3/A 04 L2	**317**	5.7	21,200	2.1	63 to 132	N56C to N180TC	8,540	10,800	3,030
	3/A 04 L2	**349**	5.2	21,200	1.9	63 to 132	N56C to N180TC	8,540	10,800	3,120
	3/A 04 L2	**386**	4.7	21,300	1.7	63 to 132	N56C to N180TC	8,630	10,900	3,230
	3/A 04 L2	**469**	3.8	21,700	1.5	63 to 132	N56C to N180TC	8,870	11,200	3,440
	3/A 04 L2	**520**	3.5	21,900	1.3	63 to 132	N56C to N180TC	9,000	11,400	3,570

3/A 05 L2 — 311 — 51,330 lb•in

n_1 rpm		i	n_2 rpm	T_{n2} lb•in	P_{n1} hp	P (IEC)	NEMA	Rn_2 [lbs] NHC/NPC	HZ/PZ	FZ
1800	**3/A 05L2**	**18.7**	96	17,000	28.5	80 to 132	N140TC to N210TC	4,330	5,470	1,180
	3/A 05L2	**22.1**	81	20,100	28.5	80 to 132	N140TC to N210TC	4,550	5,750	1,240
	3/A 05L2	**27.7**	65	25,200	28.5	80 to 132	N140TC to N210TC	4,870	6,160	1,340
	3/A 05L2	**32.2**	56	29,300	28.5	80 to 132	N140TC to N210TC	5,100	6,440	1,410
	3/A 05L2	**39.0**	46	26,600	21.4	80 to 132	N140TC to N210TC	5,400	6,820	1,500
	3/A 05L2	**44.0**	41	29,300	20.8	80 to 132	N140TC to N210TC	5,600	7,070	1,570
	3/A 05L2	**53.3**	34	26,800	15.7	80 to 132	N140TC to N210TC	5,930	7,490	1,670
	3/A 05L2	**57.0**	32	29,300	16.1	80 to 132	N140TC to N210TC	6,050	7,640	1,710
	3/A 05L2	**62.6**	28.7	28,400	14.2	80 to 132	N140TC to N210TC	6,220	7,860	1,760
	3/A 05L2	**72.5**	24.8	29,300	12.6	63 to 132	N56C to N210TC	6,500	8,220	1,850
	3/A 05L2	**75.8**	23.8	27,000	11.1	80 to 132	N140TC to N210TC	6,590	8,320	1,880
	3/A 05L2	**85.6**	21.0	31,200	11.4	80 to 132	N140TC to N210TC	6,830	8,630	1,950
	3/A 05L2	**104**	17.4	27,100	8.2	80 to 132	N140TC to N210TC	7,240	9,140	2,080
	3/A 05L2	**121**	14.9	31,100	8.1	63 to 132	N56C to N210TC	7,580	9,580	2,190
	3/A 05L2	**141**	12.8	31,800	7.1	63 to 132	N56C to N210TC	7,930	10,000	2,310
	3/A 05L2	**162**	11.1	25,700	5.0	63 to 132	N56C to N210TC	8,280	10,500	2,420
	3/A 05L2	**175**	10.3	31,900	5.7	63 to 132	N56C to N210TC	8,480	10,700	2,480
	3/A 05L2	**212**	8.5	27,400	4.0	63 to 132	N56C to N210TC	8,540	10,800	2,650
	3/A 05L2	**241**	7.5	38,000	5.0	63 to 132	N56C to N210TC	8,540	10,800	2,760
	3/A 05L2	**280**	6.4	31,900	3.6	63 to 132	N56C to N210TC	8,540	10,800	2,900
	3/A 05L2	**329**	5.5	31,900	3.0	63 to 132	N56C to N180TC	8,540	10,800	3,060
	3/A 05L2	**398**	4.5	27,700	2.2	63 to 132	N56C to N180TC	8,670	10,900	3,260
	3/A 05L2	**422**	4.3	36,600	2.7	63 to 132	N56C to N180TC	8,740	11,000	3,330
	3/A 05L2	**491**	3.7	33,400	2.1	63 to 132	N56C to N180TC	8,930	11,300	3,500
	3/A 05L2	**594**	3.0	28,700	1.5	63 to 132	N56C to N180TC	9,180	11,600	3,730

3/A 06 L2 — 329 — 95,940 lb•in

n_1 rpm		i	n_2 rpm	T_{n2} lb•in	P_{n1} hp	P (IEC)	NEMA	Rn_2 [lbs] NHC/NPC	HZ/PZ	FZ
1800	**3/A 06L2**	**27.7**	65	21,700	24.5	80 to 180	N140TC to N280TC	6,690	8,440	1,960
	3/A 06L2	**32.7**	55	25,600	24.5	80 to 180	N140TC to N280TC	7,040	8,870	2,070
	3/A 06L2	**34.9**	52	23,200	20.8	80 to 180	N140TC to N280TC	7,180	9,040	2,110
	3/A 06L2	**41.1**	44	32,100	24.5	80 to 180	N140TC to N280TC	7,530	9,500	2,230
	3/A 06L2	**47.2**	38	23,200	15.4	80 to 180	N140TC to N280TC	7,850	9,900	2,340
	3/A 06L2	**51.7**	35	34,300	20.8	80 to 180	N140TC to N280TC	8,070	10,200	2,410
	3/A 06L2	**55.7**	32	27,400	15.4	80 to 180	N140TC to N280TC	8,250	10,400	2,470
	3/A 06L2	**60.1**	29.9	39,900	20.8	80 to 180	N140TC to N280TC	8,450	10,600	2,530
	3/A 06L2	**69.9**	25.8	34,300	15.4	80 to 180	N140TC to N280TC	8,830	11,100	2,660
	3/A 06L2	**81.2**	22.2	39,900	15.4	80 to 180	N140TC to N280TC	9,240	11,700	2,800
	3/A 06L2	**88.5**	20.3	36,600	13.0	80 to 180	N140TC to N280TC	9,480	12,000	2,880
	3/A 06L2	**98.3**	18.3	47,100	15.0	80 to 180	N140TC to N280TC	9,790	12,300	2,980
	3/A 06L2	**112**	16.0	54,800	15.8	80 to 180	N140TC to N280TC	10,200	12,800	3,120
	3/A 06L2	**125**	14.5	47,700	12.0	80 to 180	N140TC to N280TC	10,500	13,200	3,230
	3/A 06L2	**141**	12.8	68,700	15.8	80 to 180	N140TC to N280TC	10,900	13,700	3,360
	3/A 06L2	**164**	11.0	57,500	11.4	80 to 180	N140TC to N280TC	11,400	14,400	3,540
	3/A 06L2	**190**	9.5	68,800	11.7	80 to 180	N140TC to N280TC	11,700	14,800	3,720
	3/A 06L2	**198**	9.1	48,700	8.0	80 to 180	N140TC to N280TC	11,700	14,800	3,770
	3/A 06L2	**221**	8.2	57,600	8.4	80 to 180	N140TC to N280TC	11,700	14,800	3,910
	3/A 06L2	**267**	6.7	48,700	5.9	80 to 180	N140TC to N280TC	11,700	14,800	4,170
	3/A 06L2	**276**	6.5	68,800	8.1	63 to 180	N56C to N280TC	11,700	14,800	4,210
	3/A 06L2	**321**	5.6	57,800	5.8	63 to 180	N56C to N280TC	11,700	14,800	4,430
	3/A 06L2	**388**	4.6	49,000	4.1	63 to 180	N56C to N280TC	11,900	15,000	4,720
	3/A 06L2	**380**	4.7	54,800	4.7	63 to 180	N56C to N280TC	11,800	14,900	4,690
	3/A 06L2	**435**	4.1	68,800	5.1	63 to 180	N56C to N280TC	12,100	15,200	4,900
	3/A 06L2	**505**	3.6	61,300	3.9	63 to 180	N56C to N280TC	12,300	15,500	5,150
	3/A 06L2	**555**	3.2	62,300	3.6	63 to 180	N56C to N280TC	12,500	15,700	5,320
	3/A 06L2	**611**	2.9	51,400	2.7	63 to 180	N56C to N280TC	12,700	16,000	5,490
	3/A 06L2	**671**	2.7	51,800	2.5	63 to 180	N56C to N280TC	12,800	16,200	5,660

3/A 07 L2

347

138,780 lb•in

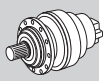

n_1 rpm		i	n_2 rpm	T_{n2} lb•in	P_{n1} hp	P (IEC)	NEMA	Rn_2 [lbs] NHC/NPC	HZ/PZ	FZ
1800	**3/A 07L2**	**27.1**	66	35,300	41	132 to 180	N210TC to N280TC	8,320	11,300	2,500
	3/A 07L2	**32.3**	56	42,100	41	132 to 180	N210TC to N280TC	8,770	11,900	2,650
	3/A 07L2	**41.5**	43	54,000	41	132 to 180	N210TC to N280TC	9,450	12,900	2,880
	3/A 07L2	**49.2**	37	64,100	41	132 to 180	N210TC to N280TC	9,950	13,500	3,050
	3/A 07L2	**57.3**	31	38,200	21	80 to 180	N140TC to N280TC	10,400	14,200	3,210
	3/A 07L2	**68.3**	26.3	45,600	21	80 to 180	N140TC to N280TC	11,000	14,900	3,400
	3/A 07L2	**87.7**	20.5	58,600	21	80 to 180	N140TC to N280TC	11,800	16,100	3,690
	3/A 07L2	**109**	16.6	77,700	23.1	80 to 180	N140TC to N280TC	12,600	17,200	3,970
	3/A 07L2	**130**	13.9	98,400	24.6	80 to 180	N140TC to N280TC	13,300	18,100	4,210
	3/A 07L2	**140**	12.8	98,400	22.7	80 to 180	N140TC to N280TC	13,600	18,500	4,320
	3/A 07L2	**155**	11.6	79,100	16.5	80 to 180	N140TC to N280TC	14,000	19,100	4,470
	3/A 07L2	**180**	10.0	95,500	17.2	80 to 180	N140TC to N280TC	14,700	20,000	4,700
	3/A 07L2	**198**	9.1	77,000	12.6	80 to 180	N140TC to N280TC	14,700	20,000	4,840
	3/A 07L2	**223**	8.1	79,700	11.6	80 to 180	N56C to N280TC	14,700	20,000	5,040
	3/A 07L2	**241**	7.5	79,700	10.7	80 to 180	N56C to N280TC	14,700	20,000	5,180
	3/A 07L2	**282**	6.4	77,000	8.8	80 to 180	N140TC to N280TC	14,700	20,000	5,450
	3/A 07L2	**341**	5.3	99,700	9.4	80 to 180	N56C to N280TC	14,700	20,000	5,810
	3/A 07L2	**405**	4.4	78,300	6.3	80 to 180	N56C to N280TC	14,900	20,300	6,150
	3/A 07L2	**439**	4.1	79,200	5.8	80 to 180	N56C to N280TC	15,100	20,500	6,320

25.7 RATING CHARTS FOR INLINE UNITS 300M L

Reading the rating chart.

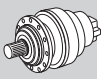

11 1

313M L	409	539,360 lb•in

	i	T_{n2} [lb•in]						P_1	P_{TB}	n_1	n_{1max}		T_{2max}
		n_2•h	n_2•h	n_2•h	n_2•h	n_2•h	n_2•h						
	1:	10,000	25,000	50,000	100,000	500,000	1,000,000	[hp]	[hp]	[rpm]	[rpm]		[lb•in]
L2	16.9	539,365	510,334	492,367	446,078	304,643	247,467	201	*	1500	2000	—	929,329
	18.5	505,643	430,943	381,910	366,687	363,677	295,438	201	*	1500	2000	—	929,329
	21.8	539,365	510,334	492,367	446,078	297,562	241,625	201	52.3	1500	2000	6L	929,329
	25.8	449,707	430,500	430,500	430,500	293,845	238,705	201	56.9	1500	2000	6G	929,329

2 3 4 5 6 7 8 9 10

1	Reference torque
2	Number of reduction stages (in-line gear unit)
3	Gear ratio
4	Gearbox rated output torque based on: - service factor f_S=1 - n_2•h indicated
5	Maximum power transmitted to input shaft
6	Gearbox thermal capacity
7	Input angular velocity
8	Maximum input angular velocity
9	Negative multidisc hydraulic brake
10	Maximum output torque at gearbox
11	Page where dimensions can be sorted from

C

300 L | 235 | 11,060 lb•in

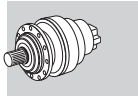

	i	T_{n2} [lb•in]						P_1	P_{TB}	n_1	n_{1max}		T_{2max}
	1:	n_2•h 10,000	n_2•h 25,000	n_2•h 50,000	n_2•h 100,000	n_2•h 500,000	n_2•h 1,000,000	[hp]	[hp]	[rpm]	[rpm]		[lb•in]
L1	3.48	6,727	6,461	6,461	6,461	6,461	6,461	27	*	2000	4000	4F	17,702
	4.26	11,063	9,470	8,408	7,612	7,435	6,373	27	*	2000	4000	4H	21,242
	5.77	7,612	6,461	5,753	5,753	5,753	5,576	27	*	2000	4000	4F	21,242
	7.20	6,196	5,310	4,868	4,868	4,868	4,514	22	*	2000	4000	4D	21,242
	9.00	4,071	3,452	3,275	3,275	3,275	3,275	11.9	*	2000	4000	4D	21,242
L2	12.1	6,727	6,461	6,461	6,461	6,461	6,461	16.0	10.2	2000	4000	4B	17,702
	14.8	11,063	9,470	8,408	7,612	7,435	6,373	16.9	10.4	2000	4000	4B	17,702
	18.2	11,063	9,470	8,408	7,612	7,435	6,373	13.9	11.2	2000	4000	4B	21,242
	20.1	7,612	6,461	5,753	5,753	5,753	5,576	9.7	8.8	2000	4000	4B	17,702
	24.6	11,063	9,470	8,408	7,612	7,435	6,373	10.5	10.3	2000	4000	4B	21,242
	30.7	11,063	9,470	8,408	7,612	7,435	6,373	8.5	9.4	2000	4000	4A	21,242
	33.3	7,612	6,461	5,753	5,753	5,753	5,576	5.8	8.8	2000	4000	4A	21,242
	38.4	11,063	9,470	8,408	7,612	7,435	6,373	6.9	9.1	2000	4000	4A	21,242
	41.5	7,612	6,461	5,753	5,753	5,753	5,576	4.7	8.1	2000	4000	4A	21,242
	51.9	7,612	6,461	5,753	5,753	5,753	5,576	3.9	7.9	2000	4000	4A	21,242
	64.8	6,196	5,310	4,868	4,868	4,868	4,514	2.7	7.0	2000	4000	4A	21,242
L3	51.6	11,063	9,470	8,408	7,612	7,435	6,373	5.6	7.5	2000	4000	4A	17,702
	63.2	11,063	9,470	8,408	7,612	7,435	6,373	4.7	8.0	2000	4000	4A	21,242
	69.9	7,612	6,461	5,753	5,753	5,753	5,576	3.2	6.6	2000	4000	4A	17,702
	77.5	11,063	9,470	8,408	7,612	7,435	6,373	4.0	7.9	2000	4000	4A	21,242
	85.6	11,063	9,470	8,408	7,612	7,435	6,373	3.6	7.6	2000	4000	4A	21,242
	105	11,063	9,470	8,408	7,612	7,435	6,373	2.9	7.5	2000	4000	4A	21,242
	116	7,612	6,461	5,753	5,753	5,753	5,576	2.1	6.7	2000	4000	4A	21,242
	131	11,063	9,470	8,408	7,612	7,435	6,373	2.4	7.1	2000	4000	4A	21,242
	142	11,063	9,470	8,408	7,612	7,435	6,373	2.2	6.8	2000	4000	4A	21,242
	177	11,063	9,470	8,408	7,612	7,435	6,373	1.7	6.4	2000	4000	4A	21,242
	192	7,612	6,461	5,753	5,753	5,753	5,576	1.4	6.1	2000	4000	4A	21,242
	221	11,063	9,470	8,408	7,612	7,435	6,373	1.4	5.9	2000	4000	4A	21,242
	240	7,612	6,461	5,753	5,753	5,753	5,576	1.1	5.9	2000	4000	4A	21,242
	299	7,612	6,461	5,753	5,753	5,753	5,576	0.88	5.5	2000	4000	4A	21,242
	374	7,612	6,461	5,753	5,753	5,753	5,576	0.71	5.4	2000	4000	4A	21,242
L4	330	11,063	9,470	8,408	7,612	7,435	6,373	1.0	5.6	2000	4000	4A	21,242
	403	7,612	6,461	5,753	5,753	5,753	5,576	0.68	5.1	2000	4000	4A	21,242
	447	11,063	9,470	8,408	7,612	7,435	6,373	0.71	5.4	2000	4000	4A	21,242
	494	11,063	9,470	8,408	7,612	7,435	6,373	0.64	5.1	2000	4000	4A	21,242
	558	11,063	9,470	8,408	7,612	7,435	6,373	0.57	5.3	2000	4000	4A	21,242
	616	11,063	9,470	8,408	7,612	7,435	6,373	0.51	4.9	2000	4000	4A	21,242
	755	11,063	9,470	8,408	7,612	7,435	6,373	0.42	4.8	2000	4000	4A	21,242
	819	11,063	9,470	8,408	7,612	7,435	6,373	0.39	4.7	2000	4000	4A	21,242
	942	11,063	9,470	8,408	7,612	7,435	6,373	0.34	4.6	2000	4000	4A	21,242
	1022	11,063	9,470	8,408	7,612	7,435	6,373	0.31	4.5	2000	4000	4A	21,242
	1108	7,612	6,461	5,753	5,753	5,753	5,576	0.25	4.4	2000	4000	4A	21,242
	1275	11,063	9,470	8,408	7,612	7,435	6,373	0.25	4.3	2000	4000	4A	21,242
	1383	7,612	6,461	5,753	5,753	5,753	5,576	0.20	4.3	2000	4000	4A	21,242
	1591	11,063	9,470	8,408	7,612	7,435	6,373	0.20	4.2	2000	4000	4A	21,242
	1725	7,612	6,461	5,753	5,753	5,753	5,576	0.16	4.1	2000	4000	4A	21,242
	2153	7,612	6,461	5,753	5,753	5,753	5,576	0.13	4.0	2000	4000	4A	21,242
	2692	8,851	8,851	7,877	7,523	6,727	5,576	0.12	3.9	2000	4000	4A	21,242

301 L | 251 | 21,770 lb•in

	i	T_{n2} [lb•in]						P_1	P_{TB}	n_1	n_{1max}		T_{2max}
	1:	n_2•h 10,000	n_2•h 25,000	n_2•h 50,000	n_2•h 100,000	n_2•h 500,000	n_2•h 1,000,000	[hp]	[hp]	[rpm]	[rpm]		[lb•in]
L1	3.48	13,188	12,657	12,657	12,657	12,657	11,506	40	*	2000	4000	4L	30,093
	4.26	21,773	18,941	16,728	15,312	13,984	11,329	40	*	2000	4000	4L	30,093
	5.77	15,223	12,922	11,506	11,506	11,506	10,975	40	*	2000	4000	4K	30,093
	7.20	10,178	10,178	10,178	10,178	10,178	8,320	40	*	2000	4000	4F	30,093
	9.00	8,143	6,904	6,461	6,461	6,461	6,461	21	*	2000	4000	4F	30,093
L2	12.1	13,188	12,657	12,657	12,657	12,657	11,506	32	10.2	2000	4000	4D	30,093
	14.8	21,773	18,941	16,728	15,312	13,984	11,329	34	10.4	2000	4000	4D	30,093

C

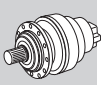

301 L

251

21,770 lb•in

	i	T_{n2} [lb•in]						P_1	P_{TB}	n_1	n_{1max}		T_{2max}
		n_2•h	n_2•h	n_2•h	n_2•h	n_2•h	n_2•h						
	1:	10,000	25,000	50,000	100,000	500,000	1,000,000	[hp]	[hp]	[rpm]	[rpm]		[lb•in]
L2	18.2	21,773	18,941	16,728	15,312	13,984	11,329	28	11.2	2000	4000	4D	30,093
	20.1	15,223	12,922	11,506	11,506	11,506	10,975	19.3	8.8	2000	4000	4D	30,093
	24.6	21,773	18,941	16,728	15,312	13,984	11,329	21	10.3	2000	4000	4D	30,093
	30.7	17,702	17,702	16,197	15,312	13,984	11,329	16.9	9.4	2000	4000	4B	30,093
	33.3	15,223	12,922	11,506	11,506	11,506	10,975	11.7	8.8	2000	4000	4B	30,093
	38.4	14,161	13,896	13,896	13,896	13,542	11,329	13.6	9.1	2000	4000	4B	30,093
	41.5	15,223	12,922	11,506	11,506	11,506	10,975	9.4	8.1	2000	4000	4B	30,093
	51.9	15,223	12,922	11,506	11,506	11,506	10,975	7.9	7.9	2000	4000	4A	30,093
	64.8	10,178	10,178	10,178	10,178	10,178	8,320	5.3	7.0	2000	4000	4A	30,093
L3	51.6	21,773	18,941	16,728	15,312	13,984	11,329	11.1	7.5	2000	4000	4A	30,093
	63.2	21,773	18,941	16,728	15,312	13,984	11,329	9.4	8.0	2000	4000	4A	30,093
	69.9	15,223	12,922	11,506	11,506	11,506	10,975	6.3	6.6	2000	4000	4A	30,093
	77.5	21,773	18,941	16,728	15,312	13,984	11,329	7.9	7.9	2000	4000	4A	30,093
	85.6	21,773	18,941	16,728	15,312	13,984	11,329	7.2	7.6	2000	4000	4A	30,093
	105	21,773	18,941	16,728	15,312	13,984	11,329	5.9	7.5	2000	4000	4A	30,093
	116	15,223	12,922	11,506	11,506	11,506	10,975	4.2	6.7	2000	4000	4A	30,093
	131	21,773	18,941	16,728	15,312	13,984	11,329	4.7	7.1	2000	4000	4A	30,093
	142	21,773	18,941	16,728	15,312	13,984	11,329	4.3	6.8	2000	4000	4A	30,093
	177	21,773	18,941	16,728	15,312	13,984	11,329	3.5	6.4	2000	4000	4A	30,093
	192	15,223	12,922	11,506	11,506	11,506	10,975	2.7	6.1	2000	4000	4A	30,093
	221	17,702	17,702	16,197	15,312	13,984	11,329	2.8	5.9	2000	4000	4A	30,093
	240	15,223	12,922	11,506	11,506	11,506	10,975	2.2	5.9	2000	4000	4A	30,093
	299	15,223	12,922	11,506	11,506	11,506	10,975	1.7	5.5	2000	4000	4A	30,093
	374	15,223	12,922	11,506	11,506	11,506	10,975	1.4	5.4	2000	4000	4A	30,093
L4	330	21,773	18,941	16,728	15,312	13,984	11,329	1.9	5.6	2000	4000	4A	30,093
	403	15,223	12,922	11,506	11,506	11,506	10,975	1.3	5.1	2000	4000	4A	30,093
	447	21,773	18,941	16,728	15,312	13,984	11,329	1.4	5.4	2000	4000	4A	30,093
	494	21,773	18,941	16,728	15,312	13,984	11,329	1.3	5.1	2000	4000	4A	30,093
	558	21,773	18,941	16,728	15,312	13,984	11,329	1.1	5.3	2000	4000	4A	30,093
	616	21,773	18,941	16,728	15,312	13,984	11,329	1.0	4.9	2000	4000	4A	30,093
	755	21,773	18,941	16,728	15,312	13,984	11,329	0.84	4.8	2000	4000	4A	30,093
	819	21,773	18,941	16,728	15,312	13,984	11,329	0.78	4.7	2000	4000	4A	30,093
	942	21,773	18,941	16,728	15,312	13,984	11,329	0.67	4.6	2000	4000	4A	30,093
	1022	21,773	18,941	16,728	15,312	13,984	11,329	0.62	4.5	2000	4000	4A	30,093
	1108	15,223	12,922	11,506	11,506	11,506	10,975	0.49	4.4	2000	4000	4A	30,093
	1275	21,773	18,941	16,728	15,312	13,984	11,329	0.50	4.3	2000	4000	4A	30,093
	1383	15,223	12,922	11,506	11,506	11,506	10,975	0.39	4.3	2000	4000	4A	30,093
	1591	17,702	17,702	16,197	15,312	13,984	11,329	0.40	4.2	2000	4000	4A	30,093
	1725	15,223	12,922	11,506	11,506	11,506	10,975	0.31	4.1	2000	4000	4A	30,093
	2153	15,223	12,922	11,506	11,506	11,506	10,975	0.25	4.0	2000	4000	4A	30,093
	2692	15,223	12,922	11,506	11,506	11,506	10,975	0.20	3.9	2000	4000	4A	30,093

303 L

267

26,290 lb•in

	i	T_{n2} [lb•in]						P_1	P_{TB}	n_1	n_{1max}		T_{2max}
		n_2•h	n_2•h	n_2•h	n_2•h	n_2•h	n_2•h						
	1:	10,000	25,000	50,000	100,000	500,000	1,000,000	[hp]	[hp]	[rpm]	[rpm]		[lb•in]
L1	3.60	21,330	20,445	20,445	20,445	20,445	18,764	54	11.2	1800	3800	5G	46,024
	4.25	26,287	24,871	24,871	23,454	22,746	18,498	54	8.8	1800	3800	5G	46,024
	5.33	25,225	22,304	19,737	19,472	18,941	17,967	54	10.3	1800	3800	5E	46,024
	6.20	21,596	18,410	16,285	16,108	16,108	16,108	54	9.4	1800	3800	5C	46,024
	7.50	17,702	15,489	14,604	14,604	14,604	13,276	54	8.8	1800	3800	5B	46,024
	9.67	9,293	7,966	7,612	7,612	7,612	7,612	23	9.1	1800	3800	5B	46,024
L2	12.5	21,330	20,445	20,445	20,445	18,852	15,312	27	8.1	2000	4000	4F	46,024
	15.3	21,330	20,445	20,445	20,445	18,587	15,046	27	7.9	2000	4000	4F	46,024
	18.1	26,287	24,871	24,871	23,454	20,799	16,905	27	7.0	2000	4000	4F	46,024
	20.8	21,330	19,560	19,560	19,560	17,967	14,604	27	7.5	2000	4000	4D	46,024
	22.7	25,225	22,304	19,737	19,472	18,941	17,967	27	8.0	2000	4000	4D	46,024
	24.5	24,517	23,897	23,454	23,189	20,180	16,374	27	6.6	2000	4000	4D	46,024
	26.4	21,596	18,410	16,285	16,108	16,108	16,108	20	7.9	2000	4000	4D	46,024
	30.8	25,225	22,304	19,737	19,472	18,941	17,967	21	7.6	2000	4000	4D	46,024

Bonfiglioli Riduttori

303 L | 267 | 26,290 lb•in

	i	T_{n2} [lb•in]						P_1	P_{TB}	n_1	n_{1max}		T_{2max}
		n_2•h	n_2•h	n_2•h	n_2•h	n_2•h	n_2•h						
	1:	10,000	25,000	50,000	100,000	500,000	1,000,000	[hp]	[hp]	[rpm]	[rpm]		[lb•in]
L2	35.8	21,596	18,410	16,285	16,108	16,108	16,108	15.0	7.5	2000	4000	4B	46,024
	38.4	25,225	21,684	19,737	19,472	18,941	17,967	17.1	6.7	2000	4000	4B	46,024
	44.6	21,596	18,410	16,285	16,108	16,108	16,108	12.3	7.1	2000	4000	4B	46,024
	55.8	20,357	18,410	16,285	16,108	16,108	16,108	10.2	6.8	2000	4000	4B	46,024
L3	53.4	21,330	20,445	20,445	20,445	18,587	15,046	12.5	6.4	2000	4000	4B	46,024
	63.1	26,287	24,871	24,871	23,454	21,153	17,170	13.1	6.1	2000	4000	4B	46,024
	72.3	21,330	20,445	20,445	20,445	18,852	15,312	9.3	5.9	2000	4000	4A	46,024
	77.2	26,287	24,871	24,871	23,454	20,799	16,905	10.9	5.9	2000	4000	4A	46,024
	90.2	21,330	20,445	20,445	20,445	18,852	15,312	7.6	5.5	2000	4000	4A	46,024
	105	26,287	24,871	24,871	23,454	20,799	16,905	8.3	5.4	2000	4000	4A	46,024
	113	21,596	18,410	16,285	16,108	16,108	16,108	5.9	5.6	2000	4000	4A	46,024
	124	21,596	18,410	16,285	16,108	16,108	16,108	5.4	5.1	2000	4000	4A	46,024
	141	24,517	23,897	23,454	23,189	20,180	16,374	6.0	5.4	2000	4000	4A	46,024
	152	21,596	18,410	16,285	16,108	16,108	16,108	4.5	5.1	2000	4000	4A	46,024
	164	25,225	22,304	19,737	19,472	18,941	17,967	5.2	5.3	2000	4000	4A	46,024
	178	25,225	22,304	19,737	19,472	18,941	17,967	4.9	4.9	2000	4000	4A	46,024
	190	21,596	18,410	16,285	16,108	16,108	16,108	3.7	4.8	2000	4000	4A	46,024
	220	19,914	19,472	19,914	19,914	16,197	15,931	3.1	4.7	2000	4000	4A	46,024
	258	21,596	18,410	16,285	16,108	16,108	16,108	2.7	4.6	2000	4000	4A	46,024
	276	25,225	21,684	19,737	19,472	18,941	17,967	3.2	4.5	2000	4000	4A	46,024
	321	21,596	18,410	16,285	16,108	16,108	16,108	2.2	4.4	2000	4000	4A	46,024
	389	17,702	15,489	14,604	14,604	14,604	13,276	1.6	4.3	2000	4000	4A	46,024
	402	21,596	18,410	16,285	16,108	16,108	16,108	1.8	4.3	2000	4000	4A	46,024
L4	413	25,225	22,304	19,737	19,472	18,941	17,967	2.2	4.2	2000	4000	4A	46,024
	446	26,287	24,871	24,871	23,454	20,799	16,905	2.1	4.1	2000	4000	4A	46,024
	492	24,517	23,897	23,454	23,189	20,180	16,374	1.8	4.0	2000	4000	4A	46,024
	556	26,287	24,871	24,871	23,454	20,799	16,905	1.7	3.9	2000	4000	4A	46,024
	649	21,330	20,445	20,445	20,445	18,852	15,312	1.1	8.0	2000	4000	4A	46,024
	718	21,596	18,410	16,285	16,108	16,108	16,108	1.0	8.0	2000	4000	4A	46,024
	816	24,517	23,897	23,454	23,189	20,180	16,374	1.1	8.0	2000	4000	4A	46,024
	896	21,596	18,410	16,285	16,108	16,108	16,108	0.81	8.0	2000	4000	4A	46,024
	1018	24,517	23,897	23,454	23,189	20,180	16,374	0.86	8.0	2000	4000	4A	46,024
	1098	21,596	18,410	16,285	16,108	16,108	16,108	0.66	8.0	2000	4000	4A	46,024
	1278	25,225	22,304	19,737	19,472	18,941	17,967	0.71	8.0	2000	4000	4A	46,024
	1370	21,596	18,410	16,285	16,108	16,108	16,108	0.53	8.0	2000	4000	4A	46,024
	1586	19,914	19,914	19,914	19,914	16,197	15,931	0.45	8.0	2000	4000	4A	46,024
	1854	21,596	18,410	16,285	16,108	16,108	16,108	0.39	8.0	2000	4000	4A	46,024
	1991	25,225	21,684	19,737	19,472	18,941	17,967	0.45	8.0	2000	4000	4A	46,024
	2243	17,702	15,489	14,604	14,604	14,604	13,276	0.28	8.0	2000	4000	4A	46,024
	2799	17,702	15,489	14,604	14,604	14,604	13,276	0.23	8.0	2000	4000	4A	46,024

304 L | 285 | 35,050 lb•in

	i	T_{n2} [lb•in]						P_1	P_{TB}	n_1	n_{1max}		T_{2max}
		n_2•h	n_2•h	n_2•h	n_2•h	n_2•h	n_2•h						
	1:	10,000	25,000	50,000	100,000	500,000	1,000,000	[hp]	[hp]	[rpm]	[rpm]		[lb•in]
L1	3.60	32,836	31,155	30,978	30,447	27,614	25,048	67	*	1800	3800	5G	64,610
	4.25	35,049	33,190	32,659	31,332	30,358	24,605	67	*	1800	3800	5G	64,610
	5.33	33,102	28,234	25,225	25,225	25,225	23,986	67	*	1800	3800	5E	64,610
	6.57	26,552	22,658	21,153	21,153	21,153	21,153	67	*	1800	3800	5C	64,610
L2	12.5	32,836	31,155	30,978	30,447	27,614	25,048	40	17.3	2000	4000	4F	64,610
	15.3	32,836	31,155	30,978	30,447	27,614	25,048	40	18.6	2000	4000	4F	64,610
	18.1	35,049	33,190	32,659	31,332	30,358	24,605	40	19.1	2000	4000	4F	64,610
	20.8	32,836	31,155	30,978	30,447	27,614	25,048	40	16.6	2000	4000	4D	64,610
	22.7	33,102	28,234	25,225	25,225	25,225	23,986	37	17.4	2000	4000	4D	64,610
	24.5	35,049	33,190	32,659	31,332	30,358	24,605	40	16.8	2000	4000	4D	64,610
	30.8	33,102	28,234	25,225	25,225	25,225	23,986	27	15.5	2000	4000	4D	64,610
	38.4	33,102	28,234	25,225	25,225	25,225	23,986	22	13.9	2000	4000	4D	64,610
	47.3	26,552	22,658	21,153	21,153	21,153	21,153	14.7	12.1	2000	4000	4B	64,610
	59.1	26,552	22,658	21,153	21,153	21,153	21,153	11.9	11.6	2000	4000	4B	64,610

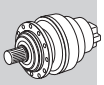

304 L — 285 — 35,050 lb•in

	i	T_{n2} [lb•in]						P_1	P_{TB}	n_1	n_{1max}		T_{2max}
		n_2•h	n_2•h	n_2•h	n_2•h	n_2•h	n_2•h						
	1:	10,000	25,000	50,000	100,000	500,000	1,000,000	[hp]	[hp]	[rpm]	[rpm]		[lb•in]
L3	43.6	32,836	31,155	30,978	30,447	27,614	25,048	25	11.4	2000	4000	4A	64,610
	53.4	32,836	31,155	30,978	30,447	27,614	25,048	20	11.6	2000	4000	4A	64,610
	63.1	35,049	33,190	32,659	31,332	30,358	24,605	18.0	11.7	2000	4000	4A	64,610
	72.3	32,836	31,155	30,978	30,447	27,614	25,048	15.0	10.4	2000	4000	4A	64,610
	77.2	35,049	33,190	32,659	31,332	30,358	24,605	14.8	12.3	2000	4000	4A	64,610
	90.2	32,836	31,155	30,978	30,447	27,260	25,048	12.1	9.5	2000	4000	4A	64,610
	105	35,049	33,190	32,659	31,332	30,358	24,605	11.2	11.4	2000	4000	4A	64,610
	111	32,836	31,155	30,978	30,447	27,614	25,048	10.0	10.5	2000	4000	4A	64,610
	130	35,049	33,190	32,659	31,332	30,358	24,605	9.1	10.5	2000	4000	4A	64,610
	141	35,049	33,190	32,659	31,332	30,358	24,605	8.5	10.1	2000	4000	4A	64,610
	150	32,836	31,155	30,978	30,447	27,614	25,048	7.5	9.4	2000	4000	4A	64,610
	165	26,552	22,658	21,153	21,153	21,153	21,153	5.0	9.0	2000	4000	4A	64,610
	178	33,102	28,234	25,225	25,225	25,225	23,986	6.0	9.6	2000	4000	4A	64,610
	202	26,552	22,658	21,153	21,153	21,153	21,153	4.2	8.9	2000	4000	4A	64,610
	220	35,049	32,836	32,394	31,332	30,358	24,605	5.5	8.6	2000	4000	4A	64,610
	273	26,552	22,658	21,153	21,153	21,153	21,153	3.1	8.1	2000	4000	4A	64,610
	341	26,552	22,658	21,153	21,153	21,153	21,153	2.5	7.8	2000	4000	4A	64,610
	426	26,552	22,658	21,153	21,153	21,153	21,153	2.0	7.2	2000	4000	4A	64,610
L4	413	33,102	28,234	25,225	25,225	25,225	23,986	2.7	8.3	2000	4000	4A	64,610
	446	35,049	33,190	32,659	31,332	30,358	24,605	2.8	7.9	2000	4000	4A	64,610
	492	35,049	33,190	32,659	31,332	30,358	24,605	2.6	7.1	2000	4000	4A	64,610
	556	35,049	33,190	32,659	31,332	30,358	24,605	2.3	7.8	2000	4000	4A	64,610
	649	32,836	31,155	30,978	30,447	27,614	25,048	1.8	6.6	2000	4000	4A	64,610
	702	26,552	22,658	21,153	21,153	21,153	21,153	1.2	6.8	2000	4000	4A	64,610
	816	35,049	33,190	32,659	31,332	30,358	24,605	1.5	6.9	2000	4000	4A	64,610
	1018	35,049	33,190	32,659	31,332	30,358	24,605	1.2	6.6	2000	4000	4A	64,610
	1164	26,552	22,658	21,153	21,153	21,153	21,153	0.75	6.4	2000	4000	4A	64,610
	1271	35,049	33,190	32,659	31,332	30,358	24,605	1.0	6.1	2000	4000	4A	64,610
	1344	32,836	31,155	30,978	30,447	27,260	25,048	0.88	5.8	2000	4000	4A	64,610
	1586	35,049	32,836	32,394	31,332	30,358	24,605	0.79	5.8	2000	4000	4A	64,610
	1815	26,552	22,658	21,153	21,153	21,153	21,153	0.48	5.9	2000	4000	4A	64,610
	1991	33,102	28,234	25,225	25,225	25,225	23,986	0.56	5.6	2000	4000	4A	64,610
	2269	26,552	22,658	21,153	21,153	21,153	21,153	0.38	5.7	2000	4000	4A	64,610
	2453	26,552	22,658	21,153	21,153	21,153	21,153	0.36	5.4	2000	4000	4A	64,610

305 L — 303 — 51,330 lb•in

	i	T_{n2} [lb•in]						P_1	P_{TB}	n_1	n_{1max}		T_{2max}
		n_2•h	n_2•h	n_2•h	n_2•h	n_2•h	n_2•h						
	1:	10,000	25,000	50,000	100,000	500,000	1,000,000	[hp]	[hp]	[rpm]	[rpm]		[lb•in]
L1	3.60	41,599	39,740	39,740	39,740	39,651	32,217	80	*	1800	3800	5K	77,887
	4.25	51,334	48,679	48,502	46,909	39,032	31,686	80	*	1800	3800	5K	77,887
	5.33	49,564	44,608	39,563	38,943	37,881	30,889	80	*	1800	3800	5K	77,887
	6.20	41,510	35,403	31,863	31,863	31,420	30,624	80	*	1800	3800	5G	77,887
	7.50	33,633	29,207	27,437	27,437	26,552	24,694	80	*	1800	3800	5E	77,887
L2	12.5	41,599	39,740	39,740	39,740	33,633	27,349	40	17.8	2000	4000	4K	77,887
	15.3	41,599	39,740	39,740	39,740	33,190	26,906	40	19.2	2000	4000	4H	77,887
	18.1	51,334	48,679	48,502	46,909	37,262	30,270	40	20.0	2000	4000	4K	77,887
	20.8	41,599	39,386	39,209	39,209	32,128	26,110	40	17.3	2000	4000	4F	77,887
	22.7	49,564	44,608	39,563	38,943	37,881	30,889	40	18.6	2000	4000	4H	77,887
	24.5	48,945	47,794	46,909	46,289	36,023	29,296	40	17.8	2000	4000	4H	77,887
	26.4	41,510	35,403	31,863	31,863	31,420	30,624	40	16.7	2000	4000	4F	77,887
	30.8	49,564	44,608	39,563	38,943	37,881	30,889	40	16.5	2000	4000	4F	77,887
	35.8	41,510	35,403	31,863	31,863	31,420	30,624	30	15.0	2000	4000	4D	77,887
	38.4	49,564	43,369	39,563	38,943	37,881	30,889	34	14.7	2000	4000	4D	77,887
	44.6	41,510	35,403	31,863	31,863	31,420	30,624	25	13.5	2000	4000	4D	77,887
	55.8	39,209	35,403	31,863	31,863	30,978	30,624	20	13.0	2000	4000	4D	77,887
L3	53.4	41,599	39,740	39,740	39,740	33,190	26,906	25	12.2	2000	4000	4B	77,887
	63.1	51,334	48,502	48,502	46,909	37,793	30,712	26	12.8	2000	4000	4D	77,887
	72.3	41,599	39,740	39,740	39,740	33,633	27,349	18.9	11.9	2000	4000	4B	77,887
	77.2	51,334	48,679	48,502	46,909	37,262	30,270	22	12.9	2000	4000	4B	77,887

305 L | 303 | 51,330 lb•in

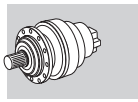

	i	T_{n2} [lb•in]						P_1	P_{TB}	n_1	n_{1max}		T_{2max}
	1:	n_2•h 10,000	n_2•h 25,000	n_2•h 50,000	n_2•h 100,000	n_2•h 500,000	n_2•h 1,000,000	[hp]	[hp]	[rpm]	[rpm]		[lb•in]
L3	90.2	41,599	39,740	39,740	39,740	33,633	27,349	15.3	11.0	2000	4000	4B	77,887
	105	51,334	48,679	48,502	46,909	37,262	30,270	16.5	11.9	2000	4000	4B	77,887
	113	41,510	35,403	31,863	31,863	31,420	30,624	11.6	11.2	2000	4000	4B	77,887
	124	41,510	35,403	31,863	31,863	31,420	30,624	10.7	10.5	2000	4000	4A	77,887
	141	48,945	47,352	46,909	46,289	36,023	29,296	11.9	10.6	2000	4000	4B	77,887
	152	41,510	35,403	31,863	31,863	31,420	30,624	9.0	10.5	2000	4000	4A	77,887
	164	49,564	44,608	39,563	38,943	37,881	30,889	10.3	10.4	2000	4000	4A	77,887
	178	49,564	44,608	39,563	38,943	37,881	30,889	9.6	10.0	2000	4000	4A	77,887
	190	41,510	35,403	31,863	31,863	31,420	30,624	7.4	9.7	2000	4000	4A	77,887
	220	42,041	42,041	42,041	42,041	32,394	28,411	6.6	9.0	2000	4000	4A	77,887
	258	41,510	35,403	31,863	31,863	31,420	30,624	5.5	8.8	2000	4000	4A	77,887
	276	49,564	43,369	39,563	38,943	37,881	30,889	6.2	8.6	2000	4000	4A	77,887
	321	41,510	35,403	31,863	31,863	31,420	30,624	4.4	8.1	2000	4000	4A	77,887
	389	33,633	29,207	27,437	27,437	26,552	24,694	3.0	7.7	2000	4000	4A	77,887
	402	41,510	35,403	31,863	31,863	31,420	30,624	3.5	7.9	2000	4000	4A	77,887
L4	413	49,564	44,608	39,563	38,943	37,881	30,889	4.3	8.6	2000	4000	4A	77,887
	446	51,334	48,679	48,502	46,909	37,262	30,270	4.1	8.6	2000	4000	4A	77,887
	492	48,945	47,352	46,909	46,289	36,023	29,296	3.5	7.9	2000	4000	4A	77,887
	556	51,334	48,679	48,502	46,909	37,262	30,270	3.3	8.1	2000	4000	4A	77,887
	649	41,599	39,740	39,740	39,740	33,633	27,349	2.3	6.9	2000	4000	4A	77,887
	718	41,510	35,403	31,863	31,863	31,420	30,624	2.0	7.1	2000	4000	4A	77,887
	816	48,945	47,352	46,909	46,289	36,023	29,296	2.1	7.1	2000	4000	4A	77,887
	896	41,510	35,403	31,863	31,863	31,420	30,624	1.6	6.8	2000	4000	4A	77,887
	1018	48,945	47,352	46,909	46,289	36,023	29,296	1.7	6.8	2000	4000	4A	77,887
	1098	41,510	35,403	31,863	31,863	31,420	30,624	1.3	6.6	2000	4000	4A	77,887
	1278	49,564	44,608	39,563	38,943	37,881	30,889	1.4	6.5	2000	4000	4A	77,887
	1370	41,510	35,403	31,863	31,863	31,420	30,624	1.1	6.3	2000	4000	4A	77,887
	1586	42,041	42,041	42,041	42,041	32,394	28,411	0.95	6.0	2000	4000	4A	77,887
	1854	41,510	35,403	31,863	31,863	31,420	30,624	0.79	5.9	2000	4000	4A	77,887
	1991	49,564	43,369	39,563	38,943	37,881	30,889	0.89	5.8	2000	4000	4A	77,887
	2243	33,633	29,207	27,437	27,437	26,552	24,694	0.54	5.8	2000	4000	4A	77,887
	2799	33,633	29,207	27,437	27,437	26,552	24,694	0.43	5.6	2000	4000	4A	77,887

306 L | 321 | 95,940 lb•in

	i	T_{n2} [lb•in]						P_1	P_{TB}	n_1	n_{1max}		T_{2max}
	1:	n_2•h 10,000	n_2•h 25,000	n_2•h 50,000	n_2•h 100,000	n_2•h 500,000	n_2•h 1,000,000	[hp]	[hp]	[rpm]	[rpm]		[lb•in]
L1	3.60	95,942	91,871	91,871	91,871	62,840	51,069	101	*	1600	3000	6K	131,876
	4.25	92,225	87,180	87,180	84,967	61,867	50,272	101	*	1600	3000	6K	131,876
	5.33	89,216	82,755	73,461	70,363	60,274	48,945	101	*	1600	3000	6G	131,876
	6.20	76,382	65,230	57,795	57,530	57,176	48,502	101	*	1600	3000	6E	131,876
	7.50	61,955	52,219	48,679	48,679	44,608	44,608	101	*	1600	3000	6C	131,876
L2	13.0	70,983	70,983	70,983	70,983	54,963	44,608	54	28.5	1800	3800	5G	131,876
	15.3	86,472	82,666	82,666	82,312	54,078	43,900	54	30.6	1800	3800	5G	131,876
	18.1	92,225	87,180	87,180	84,967	60,716	49,299	54	31.8	1800	3800	5E	131,876
	22.7	84,613	80,542	80,542	80,542	59,123	48,060	54	30.1	1800	3800	5C	131,876
	26.4	69,832	67,177	67,177	67,177	58,592	47,617	54	27.4	1800	3800	5B	131,876
	28.4	89,216	82,755	73,461	70,363	60,274	48,945	54	27.0	1800	3800	5B	131,876
	33.1	84,436	82,755	73,461	70,363	60,274	48,945	54	24.8	1800	3800	5B	131,876
	38.4	76,382	65,230	57,795	57,530	57,176	48,502	46	22.3	1800	3800	5B	131,876
	46.5	75,231	65,230	57,795	57,530	57,176	48,502	39	20.8	1800	3800	5B	131,876
	56.3	61,955	52,219	48,679	48,679	44,608	44,608	28	19.5	1800	3800	5B	131,876
	72.5	56,645	52,219	48,679	48,679	44,608	44,608	22	17.0	1800	3800	5B	131,876
L3	53.2	86,472	82,666	82,666	82,312	54,078	43,900	27	17.4	2000	4000	4F	131,876
	65.2	86,472	82,666	82,666	82,312	54,078	43,900	27	18.0	2000	4000	4D	131,876
	77.0	92,225	87,180	87,180	84,967	60,716	49,299	27	18.2	2000	4000	4D	131,876
	81.9	73,638	68,151	68,151	66,646	52,662	42,749	27	16.7	2000	4000	4D	131,876
	88.3	83,640	83,640	83,640	83,640	61,690	50,095	27	16.5	2000	4000	4D	131,876
	104	92,225	87,180	87,180	84,967	60,716	49,299	27	16.5	2000	4000	4D	131,876
	112	69,832	67,177	67,177	67,177	58,592	47,617	20	15.5	2000	4000	4D	131,876

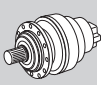

306 L

321

95,940 lb•in

	i	T_{n2} [lb•in]						P_1	P_{TB}	n_1	n_{1max}		T_{2max}
		n_2•h	n_2•h	n_2•h	n_2•h	n_2•h	n_2•h						
	1:	10,000	25,000	50,000	100,000	500,000	1,000,000	[hp]	[hp]	[rpm]	[rpm]		[lb•in]
L3	121	89,216	82,755	73,461	70,363	60,274	48,945	23	15.7	2000	4000	4B	131,876
	141	84,436	82,755	73,461	70,363	60,274	48,945	19.8	14.6	2000	4000	4B	131,876
	152	69,832	67,177	67,177	67,177	58,592	47,617	15.1	14.3	2000	4000	4B	131,876
	190	76,382	65,230	57,795	57,530	57,176	48,502	13.7	13.2	2000	4000	4B	131,876
	205	89,216	82,755	73,461	70,363	60,274	48,945	14.3	13.3	2000	4000	4B	131,876
	222	76,382	65,230	57,795	57,530	57,176	48,502	11.8	12.6	2000	4000	4A	131,876
	238	84,436	82,755	73,461	70,363	60,274	48,945	12.0	12.4	2000	4000	4A	131,876
	268	61,955	52,219	48,679	48,679	44,608	44,608	8.0	12.0	2000	4000	4A	131,876
	288	61,955	52,219	48,679	48,679	44,608	44,608	7.5	11.9	2000	4000	4A	131,876
	325	61,955	52,219	48,679	48,679	44,608	44,608	6.6	11.3	2000	4000	4A	131,876
	405	61,955	52,219	48,679	48,679	44,608	44,608	5.3	10.6	2000	4000	4A	131,876
L4	391	76,382	65,230	57,795	57,530	57,176	48,502	6.9	10.7	2000	4000	4A	131,876
	444	92,225	87,180	87,180	84,967	60,716	49,299	7.1	10.9	2000	4000	4A	131,876
	509	83,640	83,640	83,640	83,640	61,690	50,095	5.5	10.3	2000	4000	4A	131,876
	589	89,216	82,755	73,461	70,363	60,274	48,945	5.1	10.2	2000	4000	4A	131,876
	636	83,640	83,640	83,640	83,640	61,690	50,095	4.4	9.7	2000	4000	4A	131,876
	700	89,216	82,755	73,461	70,363	60,274	48,945	4.3	10.2	2000	4000	4A	131,876
	809	69,832	67,177	67,177	67,177	58,592	47,617	2.9	9.6	2000	4000	4A	131,876
	877	69,832	67,177	67,177	67,177	58,592	47,617	2.7	9.2	2000	4000	4A	131,876
	1015	84,436	82,755	73,461	70,363	60,274	48,945	2.9	9.1	2000	4000	4A	131,876
	1095	69,832	67,177	67,177	67,177	58,592	47,617	2.2	8.7	2000	4000	4A	131,876
	1279	76,382	65,230	57,795	57,530	57,176	48,502	2.1	8.4	2000	4000	4A	131,876
	1475	89,216	82,755	73,461	70,363	60,274	48,945	2.0	8.2	2000	4000	4A	131,876
	1597	76,382	65,230	57,795	57,530	57,176	48,502	1.7	7.9	2000	4000	4A	131,876
	1843	89,216	82,755	73,461	70,363	60,274	48,945	1.6	7.9	2000	4000	4A	131,876
	2074	61,955	52,219	48,679	48,679	44,608	44,608	1.1	7.6	2000	4000	4A	131,876
	2337	61,955	52,219	48,679	48,679	44,608	44,608	1.0	7.4	2000	4000	4A	131,876
	2916	61,955	52,219	48,679	48,679	44,608	44,608	0.76	7.0	2000	4000	4A	131,876

307 L

339

138,780 lb•in

	i	T_{n2} [lb•in]						P_1	P_{TB}	n_1	n_{1max}		T_{2max}
		n_2•h	n_2•h	n_2•h	n_2•h	n_2•h	n_2•h						
	1:	10,000	25,000	50,000	100,000	500,000	1,000,000	[hp]	[hp]	[rpm]	[rpm]		[lb•in]
L1	3.43	79,657	79,657	79,657	79,657	73,461	70,452	154	*	1500	2500	6L	164,624
	4.09	138,780	131,788	131,788	119,574	84,613	68,770	154	*	1500	2500	6L	185,866
	5.25	131,345	112,405	100,013	95,500	82,666	67,177	154	*	1500	2500	6L	185,866
	6.23	97,358	84,967	77,002	77,002	72,930	66,292	154	*	1500	2500	6G	185,866
L2	12.3	79,657	79,657	79,657	79,657	73,461	70,452	80	23.8	1800	3800	5K	164,624
	14.7	138,780	131,788	131,788	119,574	84,613	68,770	80	22.8	1800	3800	5G	185,866
	17.4	138,780	131,788	131,788	119,574	84,613	68,770	80	28.4	1800	3800	5K	185,866
	21.8	138,780	131,788	131,788	119,574	84,613	68,770	80	29.3	1800	3800	5G	185,866
	25.4	129,841	123,999	123,999	119,574	84,613	68,770	80	27.7	1800	3800	5E	185,866
	28.0	131,345	112,405	100,013	95,500	82,666	67,177	80	28.4	1800	3800	5C	185,866
	30.7	108,864	108,864	108,864	108,864	84,613	68,770	80	26.1	1800	3800	5C	185,866
	32.6	131,345	112,405	100,013	95,500	82,666	67,177	80	26.7	1800	3800	5C	185,866
	38.6	97,358	84,967	77,002	77,002	72,930	66,292	61	24.1	1800	3800	5B	185,866
	46.7	97,358	84,967	77,002	77,002	72,930	66,292	52	22.9	1800	3800	5B	185,866
L3	51.3	138,780	131,788	131,788	119,574	84,613	68,770	40	19.3	2000	4000	4H	185,866
	60.5	138,780	131,788	131,788	119,574	84,613	68,770	40	19.5	2000	4000	4H	185,866
	74.1	138,780	131,788	131,788	119,574	84,613	68,770	40	20.2	2000	4000	4F	185,866
	80.6	131,345	112,405	100,013	95,500	82,666	67,177	40	19.2	2000	4000	4F	185,866
	93.0	138,780	131,788	131,788	119,574	84,613	68,770	40	19.1	2000	4000	4F	185,866
	100	138,780	131,788	131,788	119,574	84,613	68,770	40	18.5	2000	4000	4F	185,866
	113	131,345	112,405	100,013	95,500	82,666	67,177	35	16.7	2000	4000	4D	185,866
	126	138,780	131,788	131,788	119,574	84,613	68,770	36	17.4	2000	4000	4D	185,866
	139	131,345	112,405	100,013	95,500	82,666	67,177	30	17.1	2000	4000	4D	185,866
	146	132,761	123,999	123,999	119,574	84,613	68,770	31	16.2	2000	4000	4D	185,866
	162	131,345	112,405	100,013	95,500	82,666	67,177	26	16.8	2000	4000	4B	185,866
	177	108,864	108,864	108,864	108,864	84,613	68,770	21	15.2	2000	4000	4B	185,866
	202	131,345	112,405	100,013	95,500	82,666	67,177	21	15.5	2000	4000	4B	185,866

307 L

339

138,780 lb•in

	i	T_{n2} [lb•in]						P_1	P_{TB}	n_1	n_{1max}		T_{2max}
	1:	n_2•h 10,000	n_2•h 25,000	n_2•h 50,000	n_2•h 100,000	n_2•h 500,000	n_2•h 1,000,000	[hp]	[hp]	[rpm]	[rpm]		[lb•in]
L3	221	132,761	122,140	114,175	110,634	84,613	68,770	21	14.1	2000	4000	4B	185,866
	239	97,358	84,967	77,002	77,002	72,930	66,292	14.1	14.5	2000	4000	4A	185,866
	284	126,831	112,405	100,013	95,500	82,666	67,177	15.2	13.7	2000	4000	4A	185,866
	336	97,358	84,967	77,002	77,002	72,930	66,292	10.1	12.9	2000	4000	4A	185,866
L4	349	138,780	131,788	131,788	119,574	84,613	68,770	13.6	13.1	2000	4000	4A	185,866
	406	131,345	112,405	100,013	95,500	82,666	67,177	11.0	13.5	2000	4000	4A	185,866
	465	131,345	112,405	100,013	95,500	82,666	67,177	9.6	12.7	2000	4000	4A	185,866
	509	132,761	123,999	123,999	119,574	84,613	68,770	9.3	11.2	2000	4000	4A	185,866
	579	138,780	131,788	131,788	119,574	84,613	68,770	8.2	11.8	2000	4000	4A	185,866
	654	131,345	112,405	100,013	95,500	82,666	67,177	6.8	11.5	2000	4000	4A	185,866
	722	138,780	131,788	131,788	119,574	84,613	68,770	6.6	11.0	2000	4000	4A	185,866
	801	131,345	112,405	100,013	95,500	82,666	67,177	5.5	11.3	2000	4000	4A	185,866
	906	138,780	131,788	131,788	119,574	84,613	68,770	5.3	10.6	2000	4000	4A	185,866
	999	131,345	112,405	100,013	95,500	82,666	67,177	4.4	10.7	2000	4000	4A	185,866
	1157	131,345	112,405	100,013	95,500	82,666	67,177	3.8	10.0	2000	4000	4A	185,866
	1274	108,864	108,864	108,864	108,864	84,613	68,770	3.1	9.6	2000	4000	4A	185,866
	1408	138,780	131,788	131,788	119,574	84,613	68,770	3.4	9.5	2000	4000	4A	185,866
	1591	132,761	122,140	114,175	110,634	84,613	68,770	3.0	8.9	2000	4000	4A	185,866
	1767	138,780	131,788	131,788	119,574	84,613	68,770	2.7	9.1	2000	4000	4A	185,866
	2041	126,831	112,405	100,013	95,500	82,666	67,177	2.2	8.7	2000	4000	4A	185,866
	2423	97,358	84,967	77,002	77,002	72,930	66,292	1.4	8.3	2000	4000	4A	185,866

C

309 L

357

205,690 lb•in

	i	T_{n2} [lb•in]						P_1	P_{TB}	n_1	n_{1max}		T_{2max}
	1:	n_2•h 10,000	n_2•h 25,000	n_2•h 50,000	n_2•h 100,000	n_2•h 500,000	n_2•h 1,000,000	[hp]	[hp]	[rpm]	[rpm]		[lb•in]
L1	3.43	115,060	115,060	115,060	115,060	108,953	96,650	201	*	1500	2000	6L	246,936
	4.09	205,691	195,336	195,336	179,316	116,122	94,349	201	*	1500	2000	6L	256,672
	5.25	194,539	168,695	149,932	143,294	113,378	92,136	201	*	1500	2000	6L	256,672
	6.23	150,463	127,451	115,060	115,060	109,484	90,986	201	*	1500	2000	6L	256,672
L2	12.3	115,060	115,060	115,060	115,060	91,074	73,992	80	34.5	1800	3800	5K	246,936
	14.7	156,924	156,924	156,924	156,924	103,111	83,728	80	34.0	1800	3800	5K	256,672
	17.4	191,353	188,167	188,167	164,447	101,430	82,400	80	40.3	1800	3800	5K	256,672
	21.8	163,827	154,888	154,888	151,702	98,774	80,276	80	40.6	1800	3800	5K	256,672
	25.4	129,841	126,566	126,566	126,566	97,889	79,568	80	38.0	1800	3800	5G	256,672
	28.0	194,539	168,695	149,932	143,294	113,378	92,136	80	39.9	1800	3800	5G	256,672
	32.6	161,969	160,199	149,932	143,294	113,378	92,136	80	37.1	1800	3800	5E	256,672
	38.6	150,463	127,451	115,060	115,060	109,484	90,986	80	33.6	1800	3800	5C	256,672
	46.7	150,463	127,451	115,060	115,060	109,484	90,986	78	31.6	1800	3800	5B	256,672
L3	51.3	156,924	156,924	156,924	156,924	103,111	83,728	40	27.1	2000	4000	4K	256,672
	60.5	191,353	188,167	188,167	164,447	101,430	82,400	40	27.3	2000	4000	4K	256,672
	74.1	191,353	188,167	188,167	164,447	101,430	82,400	40	27.8	2000	4000	4F	256,672
	80.6	194,539	168,695	149,932	143,294	113,378	92,136	40	26.7	2000	4000	4F	256,672
	93.0	163,827	154,888	154,888	151,702	98,774	80,276	40	25.9	2000	4000	4F	256,672
	100	191,353	188,167	188,167	164,447	101,430	82,400	40	24.9	2000	4000	4F	256,672
	113	161,969	160,199	149,932	143,294	113,378	92,136	40	22.9	2000	4000	4F	256,672
	126	163,827	154,888	154,888	151,702	98,774	80,276	40	23.3	2000	4000	4F	256,672
	139	161,969	160,199	149,932	143,294	113,378	92,136	40	23.1	2000	4000	4D	256,672
	162	194,539	168,695	149,932	143,294	113,378	92,136	39	22.6	2000	4000	4D	256,672
	183	129,841	126,566	126,566	126,566	97,889	79,568	24	19.9	2000	4000	4B	256,672
	202	194,539	168,695	149,932	143,294	113,378	92,136	32	20.7	2000	4000	4B	256,672
	223	150,463	127,451	115,060	115,060	109,484	90,986	23	19.7	2000	4000	4B	256,672
	239	150,463	127,451	115,060	115,060	109,484	90,986	22	19.4	2000	4000	4B	256,672
	284	139,842	139,842	139,842	132,761	113,378	92,136	17.1	18.2	2000	4000	4B	256,672
	336	150,463	127,451	115,060	115,060	109,484	90,986	15.5	17.2	2000	4000	4B	256,672
L4	349	191,353	188,167	188,167	164,447	101,430	82,400	19.4	17.1	2000	4000	4B	256,672
	406	194,539	168,695	149,932	143,294	113,378	92,136	16.4	17.8	2000	4000	4A	256,672
	465	194,539	168,695	149,932	143,294	113,378	92,136	14.3	16.5	2000	4000	4A	256,672
	509	129,841	126,566	126,566	126,566	97,889	79,568	9.0	14.7	2000	4000	4A	256,672
	579	191,353	188,167	188,167	164,447	101,430	82,400	11.7	15.3	2000	4000	4A	256,672

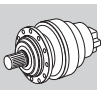

309 L — 357 — 205,690 lb•in

	i	T_{n2} [lb•in]						P_1	P_{TB}	n_1	n_{1max}		T_{2max}
		n_2•h	n_2•h	n_2•h	n_2•h	n_2•h	n_2•h						
	1:	10,000	25,000	50,000	100,000	500,000	1,000,000	[hp]	[hp]	[rpm]	[rpm]		[lb•in]
L4	654	161,969	160,199	149,932	143,294	113,378	92,136	8.9	15.0	2000	4000	4A	256,672
	722	191,353	188,167	188,167	164,447	101,430	82,400	9.4	14.3	2000	4000	4A	256,672
	801	161,969	160,199	149,932	143,294	113,378	92,136	7.3	14.8	2000	4000	4A	256,672
	906	163,827	154,888	154,888	151,702	98,774	80,276	6.3	13.7	2000	4000	4A	256,672
	999	161,969	160,199	149,932	143,294	113,378	92,136	5.8	13.8	2000	4000	4A	256,672
	1149	150,463	127,451	115,060	115,060	109,484	90,986	4.7	13.3	2000	4000	4A	256,672
	1286	150,463	127,451	115,060	115,060	109,484	90,986	4.2	12.8	2000	4000	4A	256,672
	1380	150,463	127,451	115,060	115,060	109,484	90,986	3.9	12.5	2000	4000	4A	256,672
	1605	150,463	127,451	115,060	115,060	109,484	90,986	3.4	12.1	2000	4000	4A	256,672
	1723	150,463	127,451	115,060	115,060	109,484	90,986	3.1	11.9	2000	4000	4A	256,672
	2003	150,463	127,451	115,060	115,060	109,484	90,986	2.6	11.2	2000	4000	4A	256,672
	2423	150,463	127,451	115,060	115,060	109,484	90,986	2.2	10.8	2000	4000	4A	256,672

310M L — 373 — 297,740 lb•in

	i	T_{n2} [lb•in]						P_1	P_{TB}	n_1	n_{1max}		T_{2max}
		n_2•h	n_2•h	n_2•h	n_2•h	n_2•h	n_2•h						
	1:	10,000	25,000	50,000	100,000	500,000	1,000,000	[hp]	[hp]	[rpm]	[rpm]		[lb•in]
L1	4.09	297,739	282,339	259,858	234,456	187,547	152,410	235	*	1750	1800	—	421,296
	5.25	266,496	226,933	200,912	191,707	183,299	148,870	235	*	1750	1800	—	421,296
	6.23	211,798	180,113	159,314	157,632	157,632	147,099	235	*	1750	1800	—	421,296
L2	14.7	297,739	282,339	259,858	234,456	163,473	132,761	101	36.9	1750	3000	6K	421,296
	17.4	297,739	282,339	259,858	234,456	160,907	130,726	101	46.2	1750	3000	6G	421,296
	21.8	293,579	271,275	259,858	234,456	156,658	127,274	101	47.8	1750	3000	6G	421,296
	25.4	230,651	220,030	220,030	220,030	155,242	126,123	101	45.0	1750	3000	6E	421,296
	28.0	266,496	226,933	200,912	191,707	183,299	148,870	101	46.4	1750	3000	6E	421,296
	30.7	172,413	171,085	171,085	171,085	151,525	123,025	101	43.9	1750	3000	6C	421,296
	32.6	266,496	226,933	200,912	191,707	183,299	148,870	101	43.7	1750	3000	6C	421,296
	38.6	211,798	180,113	159,314	157,632	157,632	147,099	101	38.7	1750	3000	6B	421,296
	46.7	211,798	180,113	159,314	157,632	157,632	147,099	101	37.3	1750	3000	6B	421,296
L3	53.0	271,984	271,984	259,858	231,536	142,851	116,033	54	35.0	1800	3800	5E	421,296
	62.6	297,739	282,339	259,858	227,907	140,638	114,263	54	36.0	1800	3800	5E	421,296
	73.9	297,739	282,339	259,858	234,456	157,986	128,336	54	36.4	1800	3800	5C	421,296
	80.3	266,496	226,933	200,912	191,707	167,456	136,036	54	34.2	1800	3800	5B	421,296
	92.7	297,739	282,339	259,770	232,332	153,826	124,884	54	34.7	1800	3800	5B	421,296
	101	266,496	226,933	200,912	191,707	163,031	132,407	54	32.7	1800	3800	5B	421,296
	108	248,352	248,352	248,352	234,545	152,410	123,822	54	32.4	1800	3800	5B	421,296
	119	266,496	226,933	200,912	191,707	183,299	148,870	54	31.9	1800	3800	5B	421,296
	135	293,579	271,187	259,770	234,545	156,658	127,274	54	30.1	1800	3800	5B	421,296
	149	266,496	226,933	200,912	191,707	183,299	148,870	54	30.5	1800	3800	5B	421,296
	164	240,298	240,298	240,298	234,456	156,658	127,274	46	28.1	1800	3800	5B	421,296
	177	211,798	180,113	159,314	157,632	157,632	147,099	37	27.6	1800	3800	5B	421,296
	202	266,496	226,933	200,912	191,707	183,299	148,870	41	26.7	1800	3800	5B	421,296
	230	172,413	171,085	171,085	171,085	151,525	123,025	23	24.9	1800	3800	5B	421,296
	249	211,798	180,113	159,314	157,632	157,632	147,099	27	24.7	1800	3800	5B	421,296
	295	219,676	219,676	200,912	191,707	180,378	146,480	23	23.9	1800	3800	5B	421,296
	350	211,798	180,113	159,314	157,632	157,632	147,099	18.9	22.0	1800	3800	5B	421,296
L4	392	211,798	180,113	159,314	157,632	157,632	147,099	19.4	20.7	2000	4000	4B	421,296
	453	256,229	256,229	256,229	221,888	136,921	111,254	20	20.1	2000	4000	4B	421,296
	507	266,496	226,933	200,912	191,707	183,299	148,870	18.8	21.2	2000	4000	4B	421,296
	590	266,496	226,933	200,912	191,707	181,529	146,922	16.2	19.8	2000	4000	4B	421,296
	637	266,496	226,933	200,912	191,707	183,299	148,870	15.0	20.0	2000	4000	4B	421,296
	726	266,496	226,933	200,912	191,707	163,031	132,407	13.2	17.9	2000	4000	4A	421,296
	798	266,496	226,933	200,912	191,707	181,529	147,453	12.0	18.3	2000	4000	4A	421,296
	974	293,579	271,187	259,770	234,545	156,658	127,274	10.8	16.6	2000	4000	4A	421,296
	1002	266,496	226,933	200,912	191,707	183,299	148,870	9.5	17.4	2000	4000	4A	421,296
	1164	266,496	226,933	200,912	191,707	183,299	148,870	8.2	16.5	2000	4000	4A	421,296
	1259	219,676	219,676	200,912	191,707	180,378	146,480	6.3	16.0	2000	4000	4A	421,296
	1438	211,798	180,113	159,314	157,632	157,632	147,099	5.3	15.3	2000	4000	4A	421,296
	1672	211,798	180,113	159,314	157,632	157,632	147,099	4.5	14.7	2000	4000	4A	421,296
	1794	211,798	180,113	159,314	157,632	157,632	147,099	4.2	14.3	2000	4000	4A	421,296

310M L — 373 — 297,740 lb•in

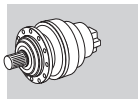

	i	T_{n2} [lb•in]						P_1	P_{TB}	n_1	n_{1max}		T_{2max}
		n_2•h	n_2•h	n_2•h	n_2•h	n_2•h	n_2•h						
	1:	10,000	25,000	50,000	100,000	500,000	1,000,000	[hp]	[hp]	[rpm]	[rpm]		[lb•in]
L4	2022	211,798	180,113	159,314	157,632	157,632	147,099	3.8	14.0	2000	4000	4A	421,296
	2523	211,798	180,113	159,314	157,632	157,632	147,099	3.0	13.3	2000	4000	4A	421,296

311M L — 391 — 435,550 lb•in

	i	T_{n2} [lb•in]						P_1	P_{TB}	n_1	n_{1max}		T_{2max}
		n_2•h	n_2•h	n_2•h	n_2•h	n_2•h	n_2•h						
	1:	10,000	25,000	50,000	100,000	500,000	1,000,000	[hp]	[hp]	[rpm]	[rpm]		[lb•in]
L1	4.09	435,545	412,356	402,267	363,323	267,381	217,197	268	*	1500	1800	—	515,999
	5.25	423,154	366,421	324,734	309,865	261,097	212,064	268	*	1500	1800	—	515,999
	6.23	322,787	274,727	243,219	240,652	240,652	209,497	268	*	1500	1800	—	515,999
L2	14.0	286,941	286,941	286,941	286,941	225,606	183,299	154	42.2	1500	2500	6L	515,999
	16.7	435,545	412,356	402,267	356,774	220,118	178,785	154	50.9	1500	2500	6L	515,999
	18.0	367,306	366,421	324,734	309,865	261,097	212,064	154	41.6	1500	2500	6K	515,999
	21.5	423,154	366,421	324,734	309,865	203,833	165,509	154	49.6	1500	2500	6K	515,999
	25.5	296,677	283,401	283,401	283,401	212,329	172,501	154	54.9	1500	2500	6E	515,999
	27.6	423,154	366,421	324,734	309,865	256,052	207,904	154	55.2	1500	2500	6G	515,999
	32.7	365,093	364,385	324,734	309,865	252,866	205,337	154	53.1	1500	2500	6E	515,999
	38.8	322,787	274,727	243,219	240,652	240,652	209,497	154	49.6	1500	2500	6E	515,999
L3	50.5	286,941	286,941	286,941	286,941	225,606	183,299	80	35.9	1800	3800	5G	515,999
	60.2	435,545	412,356	402,267	356,774	220,118	178,785	80	34.7	1800	3800	5K	515,999
	71.1	435,545	412,356	402,267	356,774	220,118	178,785	80	37.9	1800	3800	5G	515,999
	77.3	423,154	366,421	324,734	309,865	261,097	212,064	80	33.2	1800	3800	5G	515,999
	89.3	435,545	412,356	402,267	356,774	220,118	178,785	80	37.3	1800	3800	5G	515,999
	104	435,545	412,356	402,267	356,774	220,118	178,785	80	35.4	1800	3800	5G	515,999
	115	423,154	366,421	324,734	309,865	261,097	212,064	80	35.6	1800	3800	5C	515,999
	133	423,154	366,421	324,734	309,865	261,097	212,064	80	33.8	1800	3800	5B	515,999
	147	423,154	366,421	324,734	309,865	256,052	207,904	80	34.3	1800	3800	5B	515,999
	161	423,154	366,421	324,734	309,865	261,097	212,064	80	32.2	1800	3800	5B	515,999
	171	423,154	366,421	324,734	309,865	256,052	207,904	77	32.6	1800	3800	5B	515,999
	191	296,677	283,401	283,401	283,401	212,329	172,501	49	30.1	1800	3800	5B	515,999
	203	365,093	364,385	324,734	309,865	252,866	205,337	56	30.3	1800	3800	5B	515,999
	245	365,093	364,385	324,734	309,865	252,866	205,337	47	28.9	1800	3800	5B	515,999
	291	322,787	274,727	243,219	240,652	240,652	209,497	35	27.4	1800	3800	5B	515,999
L4	348	435,545	412,356	402,267	351,817	217,109	176,307	40	25.1	2000	4000	4D	515,999
	410	435,545	412,356	402,267	356,774	220,118	178,785	38	24.9	2000	4000	4D	515,999
	512	435,545	412,356	402,267	356,774	220,118	178,785	30	23.1	2000	4000	4B	515,999
	568	423,154	366,421	324,734	309,865	261,097	212,064	27	23.2	2000	4000	4B	515,999
	627	423,154	366,421	324,734	309,865	256,052	207,904	24	23.8	2000	4000	4B	515,999
	825	423,154	366,421	324,734	309,865	261,097	212,064	18.4	21.1	2000	4000	4B	515,999
	986	423,154	366,421	324,734	309,865	256,052	207,904	15.4	20.7	2000	4000	4A	515,999
	1058	423,154	366,421	324,734	309,865	256,052	207,904	14.3	20.4	2000	4000	4A	515,999
	1230	423,154	366,421	324,734	309,865	256,052	207,904	12.3	19.4	2000	4000	4A	515,999
	1415	365,093	364,385	324,734	309,865	252,866	205,337	9.2	18.7	2000	4000	4A	515,999
	1680	322,787	274,727	243,219	240,652	240,652	209,497	6.9	17.9	2000	4000	4A	515,999
	1766	365,093	364,385	324,734	309,865	252,866	205,337	7.4	17.4	2000	4000	4A	515,999
	2096	322,787	274,727	243,219	243,219	243,219	209,497	5.5	16.8	2000	4000	4A	515,999

313M L — 409 — 539,360 lb•in

	i	T_{n2} [lb•in]						P_1	P_{TB}	n_1	n_{1max}		T_{2max}
		n_2•h	n_2•h	n_2•h	n_2•h	n_2•h	n_2•h						
	1:	10,000	25,000	50,000	100,000	500,000	1,000,000	[hp]	[hp]	[rpm]	[rpm]		[lb•in]
L1	4.14	539,365	510,334	492,367	446,078	373,059	303,050	335	*	1000	1300	—	929,329
	5.40	505,643	430,943	381,910	366,687	363,677	295,438	335	*	1000	1300	—	929,329
	6.50	354,915	302,342	267,824	267,293	267,293	267,293	335	*	1000	1300	—	929,329
L2	14.2	430,500	430,500	430,500	430,500	312,254	253,574	201	*	1500	2000	—	929,329

C

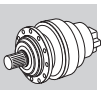

313M L

409

539,360 lb•in

	i	T_{n2} [lb•in]						P_1	P_{TB}	n_1	n_{1max}		T_{2max}
		n_2•h	n_2•h	n_2•h	n_2•h	n_2•h	n_2•h						
	1:	10,000	25,000	50,000	100,000	500,000	1,000,000	[hp]	[hp]	[rpm]	[rpm]		[lb•in]
L2	16.9	539,365	510,334	492,367	446,078	304,643	247,467	201	*	1500	2000	—	929,329
	18.5	505,643	430,943	381,910	366,687	363,677	295,438	201	*	1500	2000	—	929,329
	21.8	539,365	510,334	492,367	446,078	297,562	241,625	201	52.3	1500	2000	6L	929,329
	25.8	449,707	430,500	430,500	430,500	293,845	238,705	201	56.9	1500	2000	6G	929,329
	28.4	505,643	430,943	381,910	366,687	358,190	290,924	201	47.8	1500	2000	6L	929,329
	33.6	505,643	430,943	381,910	366,687	353,764	287,295	201	52.0	1500	2000	6G	929,329
	40.5	354,915	302,342	267,824	267,293	267,293	267,293	178	49.7	1500	2000	6E	929,329
L3	51.1	430,500	430,500	430,500	387,220	238,970	194,097	80	44.5	1800	3800	—	929,329
	61.0	539,365	510,334	492,367	438,201	270,390	219,676	80	43.4	1800	3800	—	929,329
	72.0	539,365	510,334	492,367	431,386	266,231	216,224	80	47.0	1800	3800	5K	929,329
	78.3	539,365	510,334	492,367	446,078	297,562	241,625	80	42.5	1800	3800	5K	929,329
	92.4	539,365	510,334	492,367	446,078	297,562	241,625	80	45.7	1800	3800	5G	929,329
	110	449,707	430,500	430,500	430,500	293,845	238,705	80	42.1	1800	3800	5G	929,329
	120	505,643	430,943	381,910	366,687	358,190	290,924	80	41.6	1800	3800	5C	929,329
	135	539,365	510,334	492,367	446,078	297,562	241,625	80	42.1	1800	3800	5C	929,329
	143	505,643	430,943	381,910	366,687	353,764	287,295	80	38.7	1800	3800	5C	929,329
	151	505,643	430,943	381,910	366,687	358,190	290,924	80	41.0	1800	3800	5C	929,329
	163	479,180	479,180	479,180	446,078	297,562	241,625	80	39.8	1800	3800	5B	929,329
	176	505,643	430,943	381,910	366,687	358,190	290,924	80	38.8	1800	3800	5B	929,329
	182	354,915	302,342	267,824	267,293	267,293	267,293	61	38.8	1800	3800	5B	929,329
	194	449,707	430,500	430,500	430,500	293,845	238,705	73	36.9	1800	3800	5B	929,329
	209	505,643	430,943	381,910	366,687	353,764	287,295	76	36.1	1800	3800	5B	929,329
	252	505,643	430,943	381,910	366,687	353,764	287,295	63	34.3	1800	3800	5B	929,329
	304	354,915	302,342	267,824	267,293	267,293	267,293	37	32.7	1800	3800	5B	929,329
L4	394	539,365	510,334	492,367	446,078	297,562	241,625	40	31.6	2000	4000	4F	929,329
	452	539,365	510,334	492,367	422,712	260,832	211,887	40	29.0	2000	4000	4D	929,329
	514	505,643	430,943	381,910	366,687	358,190	290,924	35	29.5	2000	4000	4D	929,329
	564	480,065	480,065	480,065	410,586	253,308	205,780	31	26.8	2000	4000	4D	929,329
	633	449,707	430,500	430,500	430,500	293,845	238,705	25	27.2	2000	4000	4B	929,329
	695	505,643	430,943	381,910	366,687	352,614	286,410	26	27.1	2000	4000	4B	929,329
	790	449,707	430,500	430,500	430,500	293,845	238,705	20	25.1	2000	4000	4B	929,329
	889	505,643	430,943	381,910	366,687	353,764	287,295	20	24.7	2000	4000	4B	929,329
	1014	505,643	430,943	381,910	366,687	358,190	290,924	18	24.1	2000	4000	4B	929,329
	1117	449,707	430,500	430,500	430,500	293,845	238,705	14	22.8	2000	4000	4A	929,329
	1266	505,643	430,943	381,910	366,687	358,190	290,924	14	22.5	2000	4000	4A	929,329
	1394	449,707	430,500	430,500	430,500	293,845	238,705	12	21.4	2000	4000	4A	929,329
	1502	505,643	430,943	381,910	366,687	353,764	287,295	12	21.4	2000	4000	4A	929,329
	1817	505,643	430,943	381,910	366,687	353,764	287,295	10	20.2	2000	4000	4A	929,329
	2187	354,915	302,342	267,824	267,293	267,293	267,293	5.8	19.7	2000	4000	4A	929,329

314M L

427

713,720 lb•in

	i	T_{n2} [lb•in]						P_1	P_{TB}	n_1	n_{1max}		T_{2max}
		n_2•h	n_2•h	n_2•h	n_2•h	n_2•h	n_2•h						
	1:	10,000	25,000	50,000	100,000	500,000	1,000,000	[hp]	[hp]	[rpm]	[rpm]		[lb•in]
L1	4.25	713,724	669,896	669,896	629,607	476,949	387,450	349	*	500	900	—	1,017,836
	5.33	648,795	597,390	551,437	528,496	460,664	374,210	349	*	500	900	—	1,017,836
	6.20	559,863	478,153	424,340	419,526	419,526	369,891	349	*	500	900	—	1,017,836
L2	17.4	713,724	669,896	669,896	629,607	400,833	325,566	235	*	1500	1800	—	1,017,836
	22.3	690,571	641,007	641,007	629,607	391,628	318,061	235	72.3	1500	1800	—	1,017,836
	26.5	547,401	526,513	526,513	526,513	386,884	314,237	235	77.7	1500	1800	—	1,017,836
	28.0	648,795	597,390	551,437	528,496	459,035	372,864	235	70.7	1500	1800	—	1,017,836
	33.2	648,795	597,390	551,437	528,496	453,512	368,333	235	73.9	1500	1800	—	1,017,836
	38.6	559,863	478,153	424,340	419,526	419,526	369,891	235	72.6	1500	1800	6G	1,017,836
L3	62.6	713,724	669,896	669,896	565,952	349,215	283,649	101	72.3	1600	3000	6E	1,017,836
	73.9	713,724	669,896	669,896	557,172	343,763	279,259	101	78.6	1600	3000	6E	1,017,836
	92.7	713,724	669,896	667,913	542,516	334,771	271,895	101	75.2	1600	3000	6E	1,017,836
	108	713,724	669,896	661,894	537,630	331,726	269,488	101	70.3	1600	3000	6E	1,017,836
	138	690,571	641,007	641,007	629,607	391,628	318,061	101	66.8	1600	3000	6E	1,017,836
	164	547,401	526,513	526,513	526,513	386,884	314,237	93	60.0	1600	3000	6C	1,017,836
	174	648,795	597,390	551,437	528,496	459,035	372,864	101	62.8	1600	3000	6C	1,017,836

314M L

427

713,720 lb•in

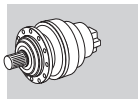

	i	T_{n2} [lb•in]						P_1	P_{TB}	n_1	n_{1max}		T_{2max}
		n_2•h	n_2•h	n_2•h	n_2•h	n_2•h	n_2•h						
	1:	10,000	25,000	50,000	100,000	500,000	1,000,000	[hp]	[hp]	[rpm]	[rpm]		[lb•in]
L3	206	648,795	597,390	551,437	528,496	453,512	368,333	88	56.8	1600	3000	6B	1,017,836
	240	559,863	478,153	424,340	419,526	419,526	369,891	65	55.2	1600	3000	6B	1,017,836
L4	314	713,724	669,896	669,896	546,976	337,461	274,161	54	54.9	1800	3800	5B	1,017,836
	394	713,724	669,966	655,664	532,603	328,611	266,939	54	51.5	1800	3800	5B	1,017,836
	458	713,724	669,896	649,787	527,788	325,708	264,531	50	48.2	1800	3800	5B	1,017,836
	495	713,724	669,896	667,913	542,516	334,771	271,895	47	48.0	1800	3800	5B	1,017,836
	575	648,795	597,390	551,437	528,496	381,786	310,130	36	45.9	1800	3800	5B	1,017,836
	588	690,571	641,007	641,007	629,607	391,628	318,061	38	45.3	1800	3800	5B	1,017,836
	668	713,724	669,896	661,894	537,630	331,726	269,488	34	42.1	1800	3800	5B	1,017,836
	738	690,571	641,007	641,007	629,607	391,628	318,061	30	42.9	1800	3800	5B	1,017,836
	858	690,571	641,007	641,007	629,607	391,628	318,061	26	40.4	1800	3800	5B	1,017,836
	926	648,795	597,390	551,437	528,496	459,035	372,864	23	41.0	1800	3800	5B	1,017,836
	1038	690,571	641,007	641,007	629,607	391,628	318,061	21	38.0	1800	3800	5B	1,017,836
	1099	648,795	597,390	551,437	528,496	453,512	368,333	19	38.1	1800	3800	5B	1,017,836
	1277	648,795	597,390	551,437	528,496	453,512	368,333	16	36.2	1800	3800	5B	1,017,836
	1485	559,863	478,153	424,340	419,526	419,526	369,891	12	35.3	1800	3800	5B	1,017,836
	1796	559,863	478,153	424,340	419,526	419,526	369,891	10	33.2	1800	3800	5B	1,017,836

315M L

443

892,160 lb•in

	i	T_{n2} [lb•in]						P_1	P_{TB}	n_1	n_{1max}		T_{2max}
		n_2•h	n_2•h	n_2•h	n_2•h	n_2•h	n_2•h						
	1:	10,000	25,000	50,000	100,000	500,000	1,000,000	[hp]	[hp]	[rpm]	[rpm]		[lb•in]
L1	4.25	892,156	837,369	837,369	787,009	596,187	484,313	349	*	500	900	—	135,000
	5.33	810,994	746,738	689,296	660,620	575,830	467,762	349	*	500	900	—	135,000
	6.20	699,829	597,691	530,425	524,407	524,407	462,363	349	*	500	900	—	135,000
L2	17.4	892,156	837,369	837,369	787,009	596,187	484,313	268	*	1500	1800	—	135,000
	22.3	892,156	837,369	837,369	787,009	596,187	484,313	268	62.9	1500	1800	—	135,000
	26.5	892,156	837,369	837,369	787,009	596,187	484,313	268	80.0	1500	1800	—	135,000
	28.0	810,994	746,738	689,296	660,620	575,830	467,762	268	62.9	1500	1800	—	135,000
	33.2	810,994	746,738	689,296	660,620	575,830	467,762	268	75.9	1500	1800	—	135,000
	38.6	699,829	597,691	530,425	524,407	524,407	462,363	268	74.5	1500	1800	—	135,000
L3	59.6	892,156	837,369	837,369	787,009	596,187	484,313	154	73.2	1500	2500	6K	135,000
	71.1	892,156	837,369	837,369	787,009	587,955	477,586	154	77.6	1500	2500	6G	135,000
	91.3	892,156	837,369	837,369	787,009	574,237	466,435	154	80.1	1500	2500	6E	135,000
	108	892,156	837,369	837,369	787,009	567,068	460,593	154	75.4	1500	2500	6C	135,000
	139	892,156	837,369	837,369	787,009	596,187	484,313	154	71.4	1500	2500	6B	135,000
	165	892,156	837,369	837,369	787,009	596,187	484,313	141	66.9	1500	2500	6B	135,000
	174	810,994	746,738	689,296	660,620	575,830	467,762	121	66.9	1500	2500	6B	135,000
	207	810,994	746,738	689,296	660,620	575,830	467,762	102	63.0	1500	2500	6B	135,000
	241	699,829	597,691	530,425	524,407	524,407	462,363	76	61.1	1500	2500	6B	135,000
L4	302	892,156	837,369	837,369	787,009	587,955	477,586	80	54.2	1800	3800	5B	135,000
	370	892,156	837,369	837,369	787,009	596,187	484,313	78	51.9	1800	3800	5B	135,000
	441	892,156	837,369	837,369	787,009	587,955	477,586	65	49.5	1800	3800	5B	135,000
	487	892,156	837,369	837,369	787,009	574,237	466,435	59	50.0	1800	3800	5B	135,000
	533	892,156	837,369	837,369	787,009	587,955	477,586	54	47.0	1800	3800	5B	135,000
	591	892,156	837,369	837,369	787,009	596,187	484,313	49	45.9	1800	3800	5B	135,000
	672	892,156	837,369	837,369	787,009	567,068	460,593	43	44.4	1800	3800	5B	135,000
	741	892,156	837,369	837,369	787,009	596,187	484,313	39	44.5	1800	3800	5B	135,000
	862	892,156	837,369	837,369	787,009	596,187	484,313	33	42.4	1800	3800	5B	135,000
	930	810,994	746,738	689,296	660,620	575,830	467,762	28	42.4	1800	3800	5B	135,000
	1043	892,156	837,369	837,369	787,009	596,187	484,313	28	40.4	1800	3800	5B	135,000
	1104	810,994	746,738	689,296	660,620	575,830	467,762	24	40.3	1800	3800	5B	135,000
	1284	810,994	746,738	689,296	660,620	575,830	467,762	20	38.7	1800	3800	5B	135,000
	1492	699,829	597,691	530,425	524,407	524,407	462,363	15.1	37.7	1800	3800	5B	135,000
	1805	699,829	597,691	530,425	524,407	524,407	462,363	12.5	36.0	1800	3800	5B	135,000

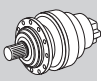

316M L

459

1,189,450 lb•in

	i	T_{n2} [lb•in]						P_1	P_{TB}	n_1	n_{1max}		T_{2max}
		n_2•h	n_2•h	n_2•h	n_2•h	n_2•h	n_2•h						
	1:	10,000	25,000	50,000	100,000	500,000	1,000,000	[hp]	[hp]	[rpm]	[rpm]		[lb•in]
L1	4.25	1,189,452	1,116,522	1,094,838	1,049,345	794,974	645,751	375	*	350	500	—	1,699,344
	5.33	1,081,473	985,088	880,827	880,827	767,803	623,624	375	*	350	500	—	1,699,344
L2	17.4	1,189,452	1,116,522	1,094,838	1,049,345	714,079	579,990	268	*	1500	1800	—	1,699,344
	21.8	1,081,473	985,088	880,827	880,827	767,803	623,624	268	*	1500	1800	—	1,699,344
	22.3	1,189,452	1,116,522	1,094,838	1,049,345	697,351	566,448	268	66.1	1500	1800	—	1,699,344
	26.5	1,045,362	1,005,799	1,005,799	1,005,799	688,765	559,456	268	86.4	1500	1800	—	1,699,344
	28.0	1,081,473	985,088	880,827	880,827	767,803	623,624	268	70.0	1500	1800	—	1,699,344
	33.2	1,081,473	985,088	880,827	880,827	767,803	623,624	268	83.4	1500	1800	—	1,699,344
L3	59.6	1,149,624	1,116,522	1,094,838	976,592	602,559	489,446	154	81.9	1500	2500	6L	1,699,344
	71.1	1,189,452	1,116,522	1,094,838	952,872	587,955	477,586	154	85.4	1500	2500	6K	1,699,344
	76.5	1,189,452	1,116,522	1,094,838	1,049,345	697,351	566,448	154	79.1	1500	2500	6G	1,699,344
	89.3	1,081,473	985,088	880,827	880,827	689,208	559,810	154	79.6	1500	2500	6G	1,699,344
	96.0	1,081,473	985,088	880,827	880,827	767,803	623,624	154	73.7	1500	2500	6E	1,699,344
	114	1,081,473	985,088	880,827	880,827	767,803	623,624	154	69.1	1500	2500	6E	1,699,344
	117	1,189,452	1,116,522	1,094,838	1,049,345	683,720	555,385	154	81.6	1500	2500	6E	1,699,344
	139	1,189,452	1,116,522	1,094,838	1,049,345	675,312	548,569	154	77.3	1500	2500	6E	1,699,344
	165	1,045,362	1,005,799	1,005,799	1,005,799	688,765	559,456	154	72.3	1500	2500	6C	1,699,344
	174	1,081,473	985,088	880,827	880,827	767,803	623,624	154	72.6	1500	2500	6C	1,699,344
	207	1,081,473	985,088	880,827	880,827	767,803	623,624	136	68.2	1500	2500	6C	1,699,344
L4	215	1,149,624	1,116,522	1,094,838	976,592	602,559	489,446	80	60.3	1800	3800	5G	1,699,344
	253	1,149,624	1,116,522	1,094,838	976,592	602,559	489,446	80	61.9	1800	3800	5G	1,699,344
	275	1,189,452	1,116,522	1,094,838	1,049,345	697,351	566,448	80	57.4	1800	3800	5E	1,699,344
	318	1,149,624	1,116,522	1,094,838	976,592	602,559	489,446	80	59.3	1800	3800	5E	1,699,344
	346	1,081,473	985,088	880,827	880,827	767,803	623,624	80	54.3	1800	3800	5C	1,699,344
	399	1,081,473	985,088	880,827	880,827	706,378	573,794	80	56.3	1800	3800	5B	1,699,344
	447	1,149,624	1,116,522	1,094,838	950,217	586,274	476,259	80	52.8	1800	3800	5B	1,699,344
	500	1,189,452	1,116,522	1,094,838	1,049,345	675,312	548,569	77	48.3	1800	3800	5B	1,699,344
	563	1,045,362	1,005,799	1,005,799	1,005,799	688,765	559,456	60	50.4	1800	3800	5B	1,699,344
	628	1,081,473	985,088	880,827	880,827	767,803	623,624	56	46.1	1800	3800	5B	1,699,344
	706	1,081,473	985,088	880,827	880,827	767,803	623,624	49	48.0	1800	3800	5B	1,699,344
	784	1,081,473	985,088	880,827	880,827	767,803	623,624	44	48.7	1800	3800	5B	1,699,344
	880	1,045,362	1,005,799	1,005,799	1,005,799	688,765	559,456	38	45.4	1800	3800	5B	1,699,344
	1020	1,081,473	985,088	880,827	880,827	664,780	539,984	34	43.5	1800	3800	5B	1,699,344
	1104	1,081,473	985,088	880,827	880,827	767,803	623,624	32	43.4	1800	3800	5B	1,699,344
	1237	1,045,362	1,005,799	1,005,799	1,005,799	688,765	559,456	27	41.3	1800	3800	5B	1,699,344
	1308	1,081,473	985,088	880,827	880,827	767,803	623,624	27	41.4	1800	3800	5B	1,699,344
	1553	1,081,473	985,088	880,827	880,827	767,803	623,624	22	39.8	1800	3800	5B	1,699,344

317M L

471

1,836,440 lb•in

	i	T_{n2} [lb•in]						P_1	P_{TB}	n_1	n_{1max}		T_{2max}
		n_2•h	n_2•h	n_2•h	n_2•h	n_2•h	n_2•h						
	1:	10,000	25,000	50,000	100,000	500,000	1,000,000	[hp]	[hp]	[rpm]	[rpm]		[lb•in]
L1	4.09	1,836,442	1,736,871	1,674,827	1,517,107	1,075,366	873,481	402	*	200	300	—	3,478,345
	5.25	1,731,561	1,482,589	1,318,319	1,259,727	1,050,230	853,035	402	*	200	300	—	3,478,345
	6.23	1,329,914	1,137,144	1,010,136	999,781	999,781	842,503	402	*	200	300	—	3,478,345
L2	16.9	1,836,442	1,736,871	1,674,827	1,517,107	970,131	787,982	335	62.2	1000	1300	—	3,478,345
	22.1	1,591,542	1,477,456	1,477,456	1,477,456	945,791	768,245	335	87.9	1000	1300	—	3,478,345
	26.6	1,113,336	1,073,596	1,073,596	1,073,596	919,239	746,649	335	92.8	1000	1300	—	3,478,345
	28.4	1,731,561	1,482,589	1,318,319	1,259,727	1,050,230	853,035	335	85.9	1000	1300	—	3,478,345
	34.1	1,380,274	1,380,274	1,318,319	1,259,727	1,050,230	853,035	335	89.7	1000	1300	—	3,478,345
	40.5	1,329,914	1,137,144	1,010,136	999,781	999,781	842,503	335	81.5	1000	1300	—	3,478,345
L3	58.1	1,661,817	1,661,817	1,620,041	1,315,841	811,968	659,469	201	45.2	1500	2000	—	3,478,345
	69.3	1,836,442	1,736,871	1,580,655	1,283,890	792,231	643,450	201	63.3	1500	2000	—	3,478,345
	89.0	1,836,442	1,736,871	1,543,659	1,253,886	773,644	628,403	201	77.8	1500	2000	6K	3,478,345
	106	1,714,302	1,714,302	1,524,630	1,238,397	764,174	620,703	201	78	1500	2000	6G	3,478,345
	116	1,591,542	1,477,456	1,477,456	1,477,456	931,364	756,474	201	72	1500	2000	6G	3,478,345
	138	1,591,542	1,477,456	1,477,456	1,477,456	919,858	747,180	201	72	1500	2000	6E	3,478,345
	166	1,113,336	1,073,596	1,073,596	1,073,596	919,239	746,649	175	68	1500	2000	6C	3,478,345
	179	1,380,274	1,380,274	1,318,319	1,259,727	1,050,230	853,035	201	65	1500	2000	6C	3,478,345
	213	1,380,274	1,380,274	1,318,319	1,259,727	1,050,230	853,035	169	65	1500	2000	6B	3,478,345

317M L

471

1,836,440 lb•in

	i	T_{n2} [lb•in]						P_1	P_{TB}	n_1	n_{1max}		T_{2max}
		n_2•h	n_2•h	n_2•h	n_2•h	n_2•h	n_2•h						
	1:	10,000	25,000	50,000	100,000	500,000	1,000,000	[hp]	[hp]	[rpm]	[rpm]		[lb•in]
L3	252	1,329,914	1,137,144	1,010,136	999,781	999,781	842,503	137	61	1500	2000	6B	3,478,345
L4	378	1,836,531	1,736,871	1,543,659	1,253,886	773,644	628,403	80	60	1800	3800	5G	3,478,345
	449	1,714,302	1,714,302	1,524,630	1,238,397	764,174	620,703	80	56	1800	3800	5C	3,478,345
	493	1,591,542	1,477,456	1,477,456	1,477,456	931,364	756,474	80	56	1800	3800	5B	3,478,345
	552	1,836,442	1,736,871	1,543,659	1,253,886	773,644	628,403	80	55	1800	3800	5B	3,478,345
	619	1,591,542	1,477,456	1,477,456	1,477,456	931,364	756,474	80	54	1800	3800	5B	3,478,345
	719	1,591,542	1,477,456	1,477,456	1,477,456	931,364	756,474	71	51	1800	3800	5B	3,478,345
	792	1,714,302	1,714,302	1,524,630	1,238,397	764,174	620,703	70	49	1800	3800	5B	3,478,345
	904	1,380,274	1,380,274	1,318,319	1,259,727	1,050,230	853,035	49	48	1800	3800	5B	3,478,345
	1032	1,591,542	1,477,456	1,477,456	1,477,456	919,858	747,180	50	46	1800	3800	5B	3,478,345
	1134	1,380,274	1,380,274	1,318,319	1,259,727	1,050,230	853,035	39	46	1800	3800	5B	3,478,345
	1318	1,380,274	1,380,274	1,318,319	1,259,727	1,050,230	853,035	34	44	1800	3800	5B	3,478,345
	1595	1,380,274	1,380,274	1,318,319	1,259,727	1,050,230	853,035	28	42	1800	3800	5B	3,478,345
	1893	1,329,914	1,137,144	1,010,136	999,781	999,781	842,503	23	40	1800	3800	5B	3,478,345

318M L

483

2,633,540 lb•in

	i	T_{n2} [lb•in]						P_1	P_{TB}	n_1	n_{1max}		T_{2max}
		n_2•h	n_2•h	n_2•h	n_2•h	n_2•h	n_2•h						
	1:	10,000	25,000	50,000	100,000	500,000	1,000,000	[hp]	[hp]	[rpm]	[rpm]		[lb•in]
L1	4.40	2,633,541	2,305,797	2,050,896	1,981,683	1,421,342	1,154,492	456	*	200	300	—	4,425,375
L2	18.7	2,633,541	2,305,797	2,050,896	1,981,683	1,421,342	1,154,492	349	175.6	500	900	—	4,425,375
	23.5	2,633,541	2,305,797	2,050,896	1,981,683	1,421,342	1,154,492	349	170.3	500	900	—	4,425,375
	27.3	2,342,794	2,267,031	2,050,896	1,981,683	1,421,342	1,154,492	349	164.8	500	900	—	4,425,375
L3	76.5	2,633,541	2,305,797	2,050,896	1,981,683	1,421,342	1,154,492	268	78.2	1500	1800	—	4,425,375
	98.2	2,633,541	2,305,797	2,050,896	1,981,683	1,421,342	1,154,492	268	103.6	1500	1800	—	4,425,375
	117	2,633,541	2,305,797	2,050,896	1,981,683	1,421,342	1,154,492	268	107.1	1500	1800	6L	4,425,375
	123	2,633,541	2,305,797	2,050,896	1,981,683	1,421,342	1,154,492	268	99.1	1500	1800	6L	4,425,375
	146	2,633,541	2,305,797	2,050,896	1,981,683	1,421,342	1,154,492	268	100.6	1500	1800	6K	4,425,375
	170	2,342,794	2,267,031	2,050,896	1,981,683	1,421,342	1,154,492	268	97.8	1500	1800	6G	4,425,375
L4	262	2,633,541	2,305,797	2,050,896	1,981,683	1,421,342	1,154,492	154	93.2	1500	2500	6E	4,425,375
	313	2,633,541	2,305,797	2,050,896	1,981,683	1,421,342	1,154,492	154	93.8	1500	2500	6C	4,425,375
	337	2,633,541	2,305,797	2,050,896	1,981,683	1,421,342	1,154,492	154	89.1	1500	2500	6C	4,425,375
	402	2,633,541	2,305,797	2,050,896	1,981,683	1,421,342	1,154,492	154	93.2	1500	2500	6B	4,425,375
	422	2,633,541	2,305,797	2,050,896	1,981,683	1,421,342	1,154,492	154	83.6	1500	2500	6B	4,425,375
	477	2,633,541	2,305,797	2,050,896	1,981,683	1,421,342	1,154,492	149	88.1	1500	2500	6B	4,425,375
	515	2,633,541	2,305,797	2,050,896	1,981,683	1,421,342	1,154,492	137	87.8	1500	2500	6B	4,425,375
	612	2,633,541	2,305,797	2,050,896	1,981,683	1,421,342	1,154,492	116	83.8	1500	2500	6B	4,425,375
	647	2,633,541	2,305,797	2,050,896	1,981,683	1,421,342	1,154,492	109	82.8	1500	2500	6B	4,425,375
	726	2,633,541	2,305,797	2,050,896	1,981,683	1,421,342	1,154,492	98	79.4	1500	2500	6B	4,425,375
	768	2,633,541	2,305,797	2,050,896	1,981,683	1,421,342	1,154,492	92	79.2	1500	2500	6B	4,425,375
	911	2,633,541	2,305,797	2,050,896	1,981,683	1,421,342	1,154,492	78	75.0	1500	2500	6B	4,425,375
	1059	2,342,794	2,267,031	2,050,896	1,981,683	1,421,342	1,154,492	59	73.0	1500	2500	6B	4,425,375

319 L

495

4,170,380 lb•in

	i	T_{n2} [lb•in]						P_1	P_{TB}	n_1	n_{1max}		T_{2max}
		n_2•h	n_2•h	n_2•h	n_2•h	n_2•h	n_2•h						
	1:	10,000	25,000	50,000	100,000	500,000	1,000,000	[hp]	[hp]	[rpm]	[rpm]		[lb•in]
L1	4.88	4,170,385	3,397,803	2,759,929	2,241,718	1,383,195	1,123,514	510	*	200	300	—	6,018,510
	5.77	3,153,257	2,706,825	2,411,210	2,205,961	1,361,157	1,105,547	510	*	200	300	—	6,018,510
L2	20.7	4,170,385	3,397,803	2,759,929	2,241,718	1,383,195	1,123,514	349	221	500	900	—	6,018,510
	24.5	3,153,257	2,706,825	2,411,210	2,205,961	1,361,157	1,105,547	349	211	500	900	—	6,018,510
	26.0	4,170,385	3,397,803	2,759,929	2,241,718	1,383,195	1,123,514	349	217	500	900	—	6,018,510
	30.8	3,153,257	2,706,825	2,411,210	2,205,961	1,361,157	1,105,547	349	208	500	900	—	6,018,510
	35.8	2,977,658	2,706,825	2,411,210	2,205,961	1,361,157	1,105,547	349	208	500	900	—	6,018,510
L3	84.8	4,170,385	3,397,803	2,759,929	2,241,718	1,383,195	1,123,514	268	114	1500	1800	—	6,018,510
	100	3,153,257	2,706,825	2,411,210	2,205,961	1,361,157	1,105,547	268	113	1500	1800	—	6,018,510

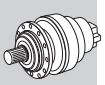

319 L

495

4,170,380 lb•in

	i	T_{n2} [lb•in]						P_1	P_{TB}	n_1	n_{1max}		T_{2max}
		n_2•h	n_2•h	n_2•h	n_2•h	n_2•h	n_2•h						
	1:	10,000	25,000	50,000	100,000	500,000	1,000,000	[hp]	[hp]	[rpm]	[rpm]		[lb•in]
L3	109	4,170,385	3,397,803	2,759,929	2,241,718	1,383,195	1,123,514	268	142	1500	1800	—	6,018,510
	126	3,153,257	2,706,825	2,411,210	2,205,961	1,361,157	1,105,547	268	114	1500	1800	6L	6,018,510
	129	3,921,148	3,397,803	2,759,929	2,241,718	1,383,195	1,123,514	268	144	1500	1800	—	6,018,510
	137	4,170,385	3,397,803	2,759,929	2,241,718	1,383,195	1,123,514	268	136	1500	1800	—	6,018,510
	162	3,153,257	2,706,825	2,411,210	2,205,961	1,361,157	1,105,547	268	132	1500	1800	6K	6,018,510
	188	2,552,733	2,513,613	2,513,524	2,241,718	1,383,195	1,123,514	268	130	1500	1800	6G	6,018,510
	192	3,153,257	2,706,825	2,411,210	2,205,961	1,361,157	1,105,547	268	132	1500	1800	6G	6,018,510
	223	2,977,658	2,706,825	2,411,210	2,205,961	1,361,157	1,105,547	268	126	1500	1800	6G	6,018,510
L4	291	4,170,385	3,397,803	2,759,929	2,241,718	1,383,195	1,123,514	154	123	1500	2500	6G	6,018,510
	347	4,170,385	3,397,803	2,759,929	2,241,718	1,383,195	1,123,514	154	122	1500	2500	6G	6,018,510
	410	3,153,257	2,706,825	2,411,210	2,205,961	1,361,157	1,105,547	154	119	1500	2500	6C	6,018,510
	445	4,170,385	3,397,803	2,759,929	2,241,718	1,383,195	1,123,514	154	119	1500	2500	6G	6,018,510
	515	3,153,257	2,706,825	2,411,210	2,205,961	1,361,157	1,105,547	154	112	1500	2500	6B	6,018,510
	528	3,597,741	3,397,803	2,759,929	2,241,718	1,383,195	1,123,514	154	112	1500	2500	6B	6,018,510
	558	4,170,385	3,397,803	2,759,929	2,241,718	1,383,195	1,123,514	154	112	1500	2500	6B	6,018,510
	571	3,921,148	3,397,803	2,759,929	2,241,718	1,383,195	1,123,514	154	110	1500	2500	6B	6,018,510
	625	3,153,257	2,706,825	2,411,210	2,205,961	1,361,157	1,105,547	136	109	1500	2500	6B	6,018,510
	678	3,832,552	3,397,803	2,759,929	2,241,718	1,383,195	1,123,514	152	105	1500	2500	6B	6,018,510
	717	4,170,385	3,397,803	2,759,929	2,241,718	1,383,195	1,123,514	154	106	1500	2500	6B	6,018,510
	802	3,153,257	2,706,825	2,411,210	2,205,961	1,361,157	1,105,547	106	104	1500	2500	6B	6,018,510
	850	3,883,267	3,397,803	2,759,929	2,241,718	1,383,195	1,123,514	123	101	1500	2500	6B	6,018,510
	912	2,977,658	2,706,825	2,411,210	2,205,961	1,361,157	1,105,547	88	95	1500	2500	6B	6,018,510
	1007	3,153,257	2,706,825	2,411,210	2,205,961	1,361,157	1,105,547	84	97	1500	2500	6B	6,018,510
	1195	3,153,257	2,706,825	2,411,210	2,205,961	1,361,157	1,105,547	71	92	1500	2500	6B	6,018,510
	1389	2,977,658	2,706,825	2,411,210	2,205,961	1,361,157	1,105,547	58	89	1500	2500	6B	6,018,510

C

321 L

507

5,803,790 lb•in

	i	T_{n2} [lb•in]						P_1	P_{TB}	n_1	n_{1max}		T_{2max}
		n_2•h	n_2•h	n_2•h	n_2•h	n_2•h	n_2•h						
	1:	10,000	25,000	50,000	100,000	500,000	1,000,000	[hp]	[hp]	[rpm]	[rpm]		[lb•in]
L1	4.44	5,803,791	4,578,404	3,718,820	3,020,672	1,863,791	1,513,921	724	*	200	300	—	8,266,601
L2	18.2	5,803,791	4,578,404	3,718,820	3,020,672	1,863,791	1,513,921	402	*	200	300	—	8,266,601
	23.3	5,803,791	4,578,404	3,718,820	3,020,672	1,863,791	1,522,329	402	*	200	300	—	8,266,601
	27.7	4,747,100	4,578,404	3,718,820	3,020,672	1,863,791	1,513,921	402	*	200	300	—	8,266,601
L3	75.3	5,803,791	4,578,404	3,718,820	3,020,672	1,863,791	1,513,921	335	176.5	1000	1200	—	8,266,601
	98.2	5,803,791	4,578,404	3,718,820	3,020,672	1,863,791	1,513,921	335	181.7	1000	1200	—	8,266,601
	118	5,803,791	4,578,404	3,718,820	3,020,672	1,863,791	1,513,921	335	177.6	1000	1200	—	8,266,601
	126	5,803,791	4,578,404	3,718,820	3,020,672	1,863,791	1,522,329	335	170.2	1000	1200	—	8,266,601
	152	5,803,791	4,578,404	3,718,820	3,020,672	1,863,791	1,522,329	335	167.5	1000	1200	—	8,266,601
	180	4,747,100	4,578,404	3,718,820	3,020,672	1,863,791	1,513,921	335	154.0	1000	1200	—	8,266,601
L4	258	5,803,791	4,578,404	3,718,820	3,020,672	1,863,791	1,513,921	201	135.8	1500	2000	6G	8,266,601
	308	5,803,791	4,578,404	3,718,820	3,020,672	1,863,791	1,513,921	201	141.3	1500	2000	6G	8,266,601
	395	5,803,791	4,578,404	3,718,820	3,020,672	1,863,791	1,513,921	201	144.0	1500	2000	6G	8,266,601
	469	5,803,791	4,578,404	3,718,820	3,020,672	1,863,791	1,513,921	201	138.0	1500	2000	6E	8,266,601
	515	5,803,791	4,578,404	3,718,820	3,020,672	1,863,791	1,513,921	201	131.3	1500	2000	6E	8,266,601
	612	5,803,791	4,578,404	3,718,820	3,020,672	1,863,791	1,513,921	201	126.8	1500	2000	6C	8,266,601
	736	5,803,791	4,578,404	3,718,820	3,020,672	1,863,791	1,513,921	174	120.4	1500	2000	6B	8,266,601
	796	5,803,791	4,578,404	3,718,820	3,020,672	1,863,791	1,522,329	161	118.3	1500	2000	6B	8,266,601
	945	5,803,791	4,578,404	3,718,820	3,020,672	1,863,791	1,522,329	136	115.1	1500	2000	6B	8,266,601
	1122	4,747,100	4,578,404	3,718,820	3,020,672	1,863,791	1,513,921	106	108.1	1500	2000	6B	8,266,601

323 L

519

7,879,910 lb•in

	i	T_{n2} [lb•in]						P_1	P_{TB}	n_1	n_{1max}		T_{2max}
	1:	n_2•h 10,000	n_2•h 25,000	n_2•h 50,000	n_2•h 100,000	n_2•h 500,000	n_2•h 1,000,000	[hp]	[hp]	[rpm]	[rpm]		[lb•in]
L1	4.60	7,879,911	7,345,591	6,567,699	5,334,701	3,291,682	2,673,635	1140	*	150	250	—	13,984,185
L2	19.6	7,879,911	7,345,591	6,567,699	5,334,701	3,291,682	2,673,635	510	*	200	300	—	13,984,185
	22.4	7,879,911	7,345,591	6,567,699	5,334,701	3,291,682	2,673,635	510	*	200	300	—	13,984,185
	26.5	7,879,911	7,345,591	6,567,699	5,334,701	3,291,682	2,673,635	510	*	200	300	—	13,984,185
	33.1	7,879,911	7,345,591	6,567,699	5,334,701	3,291,682	2,673,635	510	*	200	300	—	13,984,185
L3	83.3	7,879,911	7,345,591	6,567,699	5,334,701	3,291,682	2,673,635	349	239.5	500	800	—	13,984,185
	105	7,879,911	7,345,591	6,567,699	5,334,701	3,291,682	2,673,635	349	224.6	500	800	—	13,984,185
	113	7,879,911	7,345,591	6,567,699	5,334,701	3,291,682	2,673,635	349	210.4	500	800	—	13,984,185
	120	7,879,911	7,345,591	6,567,699	5,334,701	3,291,682	2,673,635	349	207.4	500	800	—	13,984,185
	142	7,879,911	7,345,591	6,567,699	5,334,701	3,291,682	2,673,635	349	199.7	500	800	—	13,984,185
	165	7,879,911	7,345,591	6,567,699	5,334,701	3,291,682	2,673,635	349	192.6	500	800	—	13,984,185
	205	7,879,911	7,345,591	6,567,699	5,334,701	3,291,682	2,673,635	281	181.5	500	800	—	13,984,185
L4	341	7,879,911	7,345,591	6,567,699	5,334,701	3,291,682	2,673,635	268	130.5	1500	1800	6L	13,984,185
	390	7,879,911	7,345,591	6,567,699	5,334,701	3,291,682	2,673,635	268	124.3	1500	1800	6L	13,984,185
	438	7,879,911	7,345,591	6,567,699	5,334,701	3,291,682	2,673,635	268	145.9	1500	1800	6L	13,984,185
	500	7,879,911	7,345,591	6,567,699	5,334,701	3,291,682	2,673,635	268	136.7	1500	1800	6L	13,984,185
	569	7,879,911	7,345,591	6,567,699	5,334,701	3,291,682	2,673,635	268	116.9	1500	1800	6K	13,984,185
	628	7,879,911	7,345,591	6,567,699	5,334,701	3,291,682	2,673,635	268	128.7	1500	1800	6K	13,984,185
	703	7,879,911	7,345,591	6,567,699	5,334,701	3,291,682	2,673,635	264	132.3	1500	1800	6K	13,984,185
	758	7,879,911	7,345,591	6,567,699	5,334,701	3,291,682	2,673,635	244	130.3	1500	1800	6K	13,984,185
	882	7,879,911	7,345,591	6,567,699	5,334,701	3,291,682	2,673,635	210	123.9	1500	1800	6K	13,984,185
	1025	7,879,911	7,345,591	6,567,699	5,334,701	3,291,682	2,673,635	181	119.5	1500	1800	6K	13,984,185
	1101	7,879,911	7,345,591	6,567,699	5,334,701	3,291,682	2,673,635	168	117.9	1500	1800	6K	13,984,185
	1279	7,879,911	7,345,591	6,567,699	5,334,701	3,291,682	2,673,635	145	114.3	1500	1800	6K	13,984,185

325 L

523

11,388,260 lb•in

	i	T_{n2} [lb•in]						P_1	P_{TB}	n_1	n_{1max}		T_{2max}
	1:	n_2•h 10,000	n_2•h 25,000	n_2•h 50,000	n_2•h 100,000	n_2•h 500,000	n_2•h 1,000,000	[hp]	[hp]	[rpm]	[rpm]		[lb•in]
L1	4.60	11,388,260	10,328,383	8,389,272	6,814,192	4,204,549	3,415,150	1408	*	120	250	—	17,701,500
L2	19.6	11,387,375	9,771,671	7,936,999	6,452,197	3,977,970	3,231,055	510	*	200	300	—	17,701,500
	22.4	11,388,260	9,591,912	7,791,050	6,328,286	3,904,774	3,171,666	510	*	200	300	—	17,701,500
	26.5	11,388,260	9,438,705	7,666,608	6,227,211	3,842,376	3,121,040	510	*	200	300	—	17,701,500
	33.1	8,524,777	8,524,777	7,478,884	6,073,031	3,747,231	3,043,684	510	*	200	300	—	17,701,500
L3	83.3	11,387,375	9,771,671	7,936,999	6,446,886	3,977,970	3,231,055	349	275.7	500	800	—	17,701,500
	105	11,387,375	9,771,671	7,936,999	6,446,886	3,977,970	3,231,055	349	257.0	500	800	—	17,701,500
	113	11,388,260	9,438,705	7,666,608	6,227,211	3,842,376	3,121,040	349	242.3	500	800	—	17,701,500
	120	11,388,260	9,591,912	7,791,050	6,328,286	3,904,774	3,171,666	349	237.1	500	800	—	17,701,500
	142	11,388,260	9,438,705	7,666,608	6,227,211	3,842,376	3,121,040	349	228.1	500	800	—	17,701,500
	165	11,388,260	9,438,705	7,666,608	6,227,211	3,842,376	3,121,040	349	219.4	500	800	—	17,701,500
	205	8,524,777	8,524,777	7,478,884	6,073,031	3,747,231	3,043,684	303	206.6	500	800	—	17,701,500
L4	341	11,387,375	9,771,671	7,936,999	6,446,886	3,977,970	3,231,055	268	160.4	1500	1800	6L	17,701,500
	390	11,388,260	9,591,912	7,791,050	6,328,286	3,904,774	3,171,666	268	151.8	1500	1800	6L	17,701,500
	438	11,387,375	9,771,671	7,936,999	6,446,886	3,977,970	3,231,055	268	172.1	1500	1800	6L	17,701,500
	500	11,388,260	9,591,912	7,791,050	6,328,286	3,904,774	3,171,666	268	161.2	1500	1800	6L	17,701,500
	569	11,388,260	9,591,912	7,791,050	6,328,286	3,904,774	3,171,666	268	140.3	1500	1800	6L	17,701,500
	628	11,388,260	9,591,912	7,791,050	6,328,286	3,904,774	3,171,666	268	151.2	1500	1800	6L	17,701,500
	703	11,388,260	9,438,705	7,666,608	6,227,211	3,842,376	3,121,040	268	154.2	1500	1800	6L	17,701,500
	758	11,387,375	9,771,671	7,936,999	6,446,886	3,977,970	3,231,055	268	151.7	1500	1800	6K	17,701,500
	882	11,388,260	9,438,705	7,666,608	6,227,211	3,842,376	3,121,040	268	144.2	1500	1800	6K	17,701,500
	1025	11,388,260	9,438,705	7,666,608	6,227,211	3,842,376	3,121,040	259	139.0	1500	1800	6K	17,701,500
	1101	8,524,777	8,524,777	7,479,946	6,074,712	3,748,735	3,043,684	181	137.3	1500	1800	6K	17,701,500
	1279	8,524,777	8,524,777	7,479,946	6,074,712	3,748,735	3,043,684	156	132.9	1500	1800	6K	17,701,500

25.8 RATING CHARTS FOR RIGHT ANGLE UNITS 300M R

Reading the rating chart.

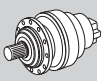

310M R	375	297,740 lb•in

	i	T_{n2} [lb•in]						P_1	P_{TB}	n_1	n_{1max}		T_{2max}
		n_2•h	n_2•h	n_2•h	n_2•h	n_2•h	n_2•h						
	1:	10000	25000	50000	100000	500000	1000000	[hp]	[hp]	[rpm]	[rpm]		[lb•in]
R2	12.0	220,207	215,250	215,250	215,250	138,072	112,139	174	*	1500	2500	6L	421,296
	15.4	266,496	226,933	200,912	191,707	164,447	133,558	174	*	1500	2500	6K	421,296
	18.3	211,798	180,113	159,314	157,632	157,632	147,099	174	*	1500	2500	6G	421,296
	16.6	297,739	282,339	259,858	234,545	158,163	128,424	174	*	1500	2500	6K	421,296
	21.3	266,496	226,933	200,912	191,707	183,299	148,870	174	*	1500	2500	6K	421,296

1	Reference torque
2	Number of reduction stages (right-angled gear unit)
3	Gear ratio
4	Gearbox rated output torque based on: - service factor f_S=1 - n_2•h indicated
5	Maximum power transmitted to the input shaft
6	Gearbox thermal capacity
7	Input angular velocity
8	Maximum input angular velocity
9	Negative multidisc hydraulic brake
10	Maximum output torque at gearbox
11	Page where dimensions can be sorted from

C

300 R | 237 | 11,060 lb•in

	i	T_{n2} [lb•in]						P_1	P_{TB}	n_1	n_{1max}		T_{2max}
		n_2•h	n_2•h	n_2•h	n_2•h	n_2•h	n_2•h						
	1:	10,000	25,000	50,000	100,000	500,000	1,000,000	[hp]	[hp]	[rpm]	[rpm]		[lb•in]
R2	7.13	6,727	6,461	6,461	6,461	6,461	6,461	20	16.4	2000	4000	4D	17,702
	8.74	11,063	9,470	8,408	7,612	7,435	6,373	20	16.5	2000	4000	4D	21,242
	11.8	7,612	6,461	5,753	5,753	5,753	5,576	16.4	13.5	2000	4000	4B	21,242
	14.8	6,196	5,310	4,868	4,868	4,868	4,514	11.1	11.8	2000	4000	4B	21,242
	18.5	4,071	3,452	3,275	3,275	3,275	3,275	6.0	11.3	2000	4000	4B	21,242
R3	24.8	6,727	6,461	6,461	6,461	6,461	6,461	8.3	10.4	2000	4000	4A	17,702
	30.4	11,063	9,470	8,408	7,612	7,435	6,373	8.9	10.5	2000	4000	4A	21,242
	37.3	11,063	9,470	8,408	7,612	7,435	6,373	7.3	10.6	2000	4000	4A	21,242
	41.2	7,612	6,461	5,753	5,753	5,753	5,576	4.9	9.2	2000	4000	4A	21,242
	50.4	11,063	9,470	8,408	7,612	7,435	6,373	5.7	9.5	2000	4000	4A	21,242
	62.9	11,063	9,470	8,408	7,612	7,435	6,373	4.7	8.7	2000	4000	4A	21,242
	68.2	7,612	6,461	5,753	5,753	5,753	5,576	3.2	8.4	2000	4000	4A	21,242
	78.7	11,063	9,470	8,408	7,612	7,435	6,373	3.9	8.3	2000	4000	4A	21,242
	85.2	7,612	6,461	5,753	5,753	5,753	5,576	2.7	7.8	2000	4000	4A	21,242
	106	7,612	6,461	5,753	5,753	5,753	5,576	2.3	7.5	2000	4000	4A	21,242
	133	6,196	5,310	4,868	4,868	4,868	4,514	1.5	7.0	2000	4000	4A	21,242
R4	106	11,063	9,470	8,408	7,612	7,435	6,373	3.0	7.7	2000	4000	4A	21,242
	130	11,063	9,470	8,408	7,612	7,435	6,373	2.4	7.7	2000	4000	4A	21,242
	143	7,612	6,461	5,753	5,753	5,753	5,576	1.8	6.9	2000	4000	4A	21,242
	159	11,063	9,470	8,408	7,612	7,435	6,373	2.0	7.6	2000	4000	4A	21,242
	175	11,063	9,470	8,408	7,612	7,435	6,373	1.8	7.1	2000	4000	4A	21,242
	215	11,063	9,470	8,408	7,612	7,435	6,373	1.5	7.1	2000	4000	4A	21,242
	237	7,612	6,461	5,753	5,753	5,753	5,576	1.1	6.56	2000	4000	4A	21,242
	268	11,063	9,470	8,408	7,612	7,435	6,373	1.2	6.66	2000	4000	4A	21,242
	291	11,063	9,470	8,408	7,612	7,435	6,373	1.1	6.42	2000	4000	4A	21,242
	363	11,063	9,470	8,408	7,612	7,435	6,373	0.87	6.14	2000	4000	4A	21,242
	394	7,612	6,461	5,753	5,753	5,753	5,576	0.69	6.07	2000	4000	4A	21,242
	453	11,063	9,470	8,408	7,612	7,435	6,373	0.70	5.74	2000	4000	4A	21,242
	491	7,612	6,461	5,753	5,753	5,753	5,576	0.56	5.78	2000	4000	4A	21,242
	613	7,612	6,461	5,753	5,753	5,753	5,576	0.44	5.50	2000	4000	4A	21,242
	766	7,612	6,461	5,753	5,753	5,753	5,576	0.36	5.34	2000	4000	4A	21,242

301 R | 253 | 21,770 lb•in

	i	T_{n2} [lb•in]						P_1	P_{TB}	n_1	n_{1max}		T_{2max}
		n_2•h	n_2•h	n_2•h	n_2•h	n_2•h	n_2•h						
	1:	10,000	25,000	50,000	100,000	500,000	1,000,000	[hp]	[hp]	[rpm]	[rpm]		[lb•in]
R2	7.13	13,188	12,657	12,657	12,657	12,657	11,506	20	18.7	2000	4000	4F	30,093
	8.74	18,233	18,233	16,728	15,312	13,984	11,329	20	19.4	2000	4000	4H	30,093
	11.8	15,223	12,922	11,506	11,506	11,506	10,975	20	16.3	2000	4000	4F	30,093
	14.8	10,178	10,178	10,178	10,178	10,178	8,320	20	14.3	2000	4000	4D	30,093
	18.5	8,143	6,904	6,550	6,550	6,550	6,550	10.7	13.6	2000	4000	4D	30,093
R3	24.8	13,188	12,657	12,657	12,657	12,657	11,506	16.6	11.9	2000	4000	4B	30,093
	30.4	21,773	18,941	16,816	15,312	13,984	11,329	17.5	12.0	2000	4000	4B	30,093
	37.3	21,773	18,941	16,816	15,312	13,984	11,329	14.4	12.1	2000	4000	4B	30,093
	41.2	15,223	12,922	11,506	11,506	11,506	10,975	9.8	10.6	2000	4000	4B	30,093
	50.4	21,773	18,941	16,816	15,312	13,984	11,329	11.3	10.7	2000	4000	4B	30,093
	62.9	17,702	17,702	16,197	15,312	13,984	11,329	9.4	9.8	2000	4000	4A	30,093
	68.2	15,223	12,922	11,506	11,506	11,506	10,975	6.4	9.6	2000	4000	4A	30,093
	78.7	14,161	14,161	14,161	14,161	13,542	11,329	7.8	9.4	2000	4000	4A	30,093
	85.2	15,223	12,922	11,506	11,506	11,506	10,975	5.3	8.8	2000	4000	4A	30,093
	106	15,223	12,922	11,506	11,506	11,506	10,975	4.5	8.5	2000	4000	4A	30,093
	133	10,178	10,178	10,178	10,178	10,178	8,320	2.7	7.8	2000	4000	4A	30,093
R4	106	21,773	18,941	16,816	15,312	13,984	11,329	6.0	8.5	2000	4000	4A	30,093
	130	21,773	18,941	16,816	15,312	13,984	11,329	4.9	8.5	2000	4000	4A	30,093
	143	15,223	12,922	11,506	11,506	11,506	10,975	3.6	7.7	2000	4000	4A	30,093
	159	21,773	18,941	16,816	15,312	13,984	11,329	4.0	8.5	2000	4000	4A	30,093
	175	21,773	18,941	16,816	15,312	13,984	11,329	3.6	7.9	2000	4000	4A	30,093
	215	21,773	18,941	16,816	15,312	13,984	11,329	3.0	7.8	2000	4000	4A	30,093
	237	15,223	12,922	11,506	11,506	11,506	10,975	2.3	7.2	2000	4000	4A	30,093
	268	21,773	18,941	16,816	15,312	13,984	11,329	2.4	7.3	2000	4000	4A	30,093

C

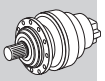

301 R | 253 | 21,770 lb•in

	i	T_{n2} [lb•in]						P_1	P_{TB}	n_1	n_{1max}		T_{2max}
		n_2•h	n_2•h	n_2•h	n_2•h	n_2•h	n_2•h						
	1:	10,000	25,000	50,000	100,000	500,000	1,000,000	[hp]	[hp]	[rpm]	[rpm]		[lb•in]
R4	291	21,773	18,941	16,816	15,312	13,984	11,329	2.2	7.1	2000	4000	4A	30,093
	363	21,773	18,941	16,816	15,312	13,984	11,329	1.7	6.7	2000	4000	4A	30,093
	394	15,223	12,922	11,506	11,506	11,506	10,975	1.4	6.6	2000	4000	4A	30,093
	453	17,702	17,702	16,197	15,312	13,984	11,329	1.4	6.2	2000	4000	4A	30,093
	491	15,223	12,922	11,506	11,506	11,506	10,975	1.1	6.24	2000	4000	4A	30,093
	613	15,223	12,922	11,506	11,506	11,506	10,975	0.88	5.90	2000	4000	4A	30,093
	766	15,223	12,922	11,506	11,506	11,506	10,975	0.70	5.72	2000	4000	4A	30,093

303 R | 269 | 26,290 lb•in

	i	T_{n2} [lb•in]						P_1	P_{TB}	n_1	n_{1max}		T_{2max}
		n_2•h	n_2•h	n_2•h	n_2•h	n_2•h	n_2•h						
	1:	10,000	25,000	50,000	100,000	500,000	1,000,000	[hp]	[hp]	[rpm]	[rpm]		[lb•in]
R2	9.23	21,330	20,445	20,445	20,445	20,445	17,170	47	24	1800	3800	4H	46,024
	10.9	26,287	24,871	24,871	23,454	22,746	18,498	47	25	1800	3800	4H	46,024
	13.7	25,225	22,304	19,737	19,472	18,941	17,967	43	22	1800	3800	4F	46,024
	15.9	21,596	18,410	16,285	16,108	16,108	16,108	30	19	1800	3800	4F	46,024
	19.2	17,702	15,489	14,604	14,604	14,604	13,276	23	17.5	1800	3800	4D	46,024
	24.8	9,293	7,966	7,612	7,612	7,612	7,612	9.3	15.0	1800	3800	4D	46,024
R3	25.7	21,330	20,445	20,445	20,445	18,852	15,312	20	14.2	2,000	4,000	4D	46,024
	31.5	21,330	20,445	20,445	20,445	18,587	15,046	20	14.2	2,000	4,000	4B	46,024
	37.1	26,287	24,871	24,871	23,454	20,799	16,905	20	14.4	2,000	4,000	4B	46,024
	42.6	21,330	19,560	19,560	19,560	17,967	14,604	15.6	12.4	2,000	4,000	4B	46,024
	46.6	25,225	22,304	19,737	19,472	18,941	17,967	15.0	13.4	2,000	4,000	4B	46,024
	50.3	24,517	23,897	23,454	23,189	20,180	16,374	16.3	12.5	2,000	4,000	4B	46,024
	54.2	21,596	18,410	16,285	16,108	16,108	16,108	10.8	12.4	2,000	4,000	4B	46,024
	63.1	25,225	22,304	19,737	19,472	18,941	17,967	11.6	11.8	2,000	4,000	4B	46,024
	73.3	21,596	18,410	16,285	16,108	16,108	16,108	8.3	11.0	2,000	4,000	4A	46,024
	78.7	25,225	21,684	19,737	19,472	18,941	17,967	9.6	10.7	2,000	4,000	4A	46,024
	91.5	21,596	18,410	16,285	16,108	16,108	16,108	6.9	10.0	2,000	4,000	4A	46,024
	114	20,357	18,410	16,285	16,108	16,108	16,108	5.8	9.6	2,000	4,000	4A	46,024
R4	129	26,287	24,871	24,871	23,454	21,153	17,170	6.9	9.6	2,000	4,000	4A	46,024
	148	21,330	20,445	20,445	20,445	18,852	15,312	4.9	8.8	2,000	4,000	4A	46,024
	158	26,287	24,871	24,871	23,454	20,799	16,905	5.8	9.6	2,000	4,000	4A	46,024
	185	21,330	20,445	20,445	20,445	18,852	15,312	3.9	8.1	2,000	4,000	4A	46,024
	214	26,287	24,871	24,871	23,454	20,799	16,905	4.3	8.8	2,000	4,000	4A	46,024
	231	21,596	18,410	16,285	16,108	16,108	16,108	3.2	8.5	2,000	4,000	4A	46,024
	255	21,596	18,410	16,285	16,108	16,108	16,108	2.9	7.9	2,000	4,000	4A	46,024
	290	24,517	23,897	23,454	23,189	20,180	16,374	3.0	7.9	2,000	4,000	4A	46,024
	313	21,596	18,410	16,285	16,108	16,108	16,108	2.3	7.9	2,000	4,000	4A	46,024
	336	25,225	22,304	19,737	19,472	18,941	17,967	2.7	7.8	2,000	4,000	4A	46,024
	364	25,225	22,304	19,737	19,472	18,941	17,967	2.5	7.6	2,000	4,000	4A	46,024
	390	21,596	18,410	16,285	16,108	16,108	16,108	1.9	7.4	2,000	4,000	4A	46,024
	452	19,914	19,914	19,914	19,914	16,197	15,931	1.6	6.9	2,000	4,000	4A	46,024
	528	21,596	18,410	16,285	16,108	16,108	16,108	1.4	6.8	2,000	4,000	4A	46,024
	567	25,225	21,684	19,737	19,472	18,941	17,967	1.6	6.6	2,000	4,000	4A	46,024
	659	21,596	18,410	16,285	16,108	16,108	16,108	1.1	6.31	2,000	4,000	4A	46,024
	797	17,702	15,489	14,604	14,604	14,604	13,276	0.80	6.16	2,000	4,000	4A	46,024
	824	21,596	18,410	16,285	16,108	16,108	16,108	0.89	6.21	2,000	4,000	4A	46,024

304 R

287

35,050 lb•in

	i	T_{n2} [lb•in]						P_1	P_{TB}	n_1	n_{1max}		T_{2max}
		n_2•h	n_2•h	n_2•h	n_2•h	n_2•h	n_2•h						
	1:	10,000	25,000	50,000	100,000	500,000	1,000,000	[hp]	[hp]	[rpm]	[rpm]		[lb•in]
R2	9.23	32,836	31,155	30,978	28,499	21,153	17,170	47	24	1800	3800	4H	58,415
	10.9	35,049	33,190	32,659	31,332	23,720	19,295	47	25	1800	3800	4H	58,415
	13.7	33,102	28,234	25,225	25,225	25,225	22,658	47	22	1800	3800	4F	58,415
	16.8	26,552	22,658	21,153	21,153	21,153	21,153	37	18	1800	3800	4F	58,415
R3	25.7	32,836	31,155	30,978	30,447	27,260	25,048	20	14.4	2,000	4,000	4D	64,610
	31.5	32,836	31,155	30,978	30,447	27,260	25,048	20	14.7	2,000	4,000	4B	64,610
	37.1	35,049	33,190	32,659	31,332	30,358	24,605	20	14.8	2,000	4,000	4B	64,610
	42.6	32,836	31,155	30,978	30,447	27,614	25,048	20	13.0	2,000	4,000	4B	64,610
	46.6	33,102	28,234	25,225	25,225	25,225	23,986	19.0	13.8	2,000	4,000	4B	64,610
	50.3	35,049	33,190	32,659	31,332	30,358	24,605	20	13.2	2,000	4,000	4B	64,610
	63.1	33,102	28,234	25,225	25,225	25,225	23,986	14.7	12.3	2,000	4,000	4B	64,610
	78.7	33,102	28,234	25,225	25,225	25,225	23,986	12.0	11.4	2,000	4,000	4B	64,610
	97.0	26,641	22,658	21,153	21,153	21,153	21,153	7.9	10.1	2,000	4,000	4A	64,610
	121	26,641	22,658	21,153	21,153	21,153	21,153	6.6	9.9	2,000	4,000	4A	64,610
R4	89.4	32,836	31,155	30,978	30,447	27,614	25,048	12.6	10.0	2,000	4,000	4A	64,610
	109	32,836	31,155	30,978	30,447	27,614	25,048	10.4	10.0	2,000	4,000	4A	64,610
	129	35,049	33,190	32,659	31,332	30,358	24,605	9.5	10.0	2,000	4,000	4A	64,610
	148	32,836	31,155	30,978	30,447	27,614	25,048	7.8	9.0	2,000	4,000	4A	64,610
	158	35,049	33,190	32,659	31,332	30,358	24,605	7.8	10.0	2,000	4,000	4A	64,610
	185	32,836	31,155	30,978	30,447	27,260	25,048	6.3	8.3	2,000	4,000	4A	64,610
	214	35,049	33,190	32,659	31,332	30,358	24,605	5.9	9.1	2,000	4,000	4A	64,610
	227	32,836	31,155	30,978	30,447	27,614	25,048	5.2	8.4	2,000	4,000	4A	64,610
	267	35,049	33,190	32,659	31,332	30,358	24,605	4.7	8.5	2,000	4,000	4A	64,610
	290	35,049	33,190	32,659	31,332	30,358	24,605	4.3	8.3	2,000	4,000	4A	64,610
	307	32,836	31,155	30,978	30,447	27,614	25,048	3.8	7.7	2,000	4,000	4A	64,610
	338	26,641	22,658	21,153	21,153	21,153	21,153	2.6	7.5	2,000	4,000	4A	64,610
	364	33,102	28,234	25,225	25,225	25,225	23,986	3.1	8.0	2,000	4,000	4A	64,610
	414	26,641	22,658	21,153	21,153	21,153	21,153	2.1	7.4	2,000	4,000	4A	64,610
	452	35,049	32,836	32,394	31,332	30,358	24,605	2.8	7.2	2,000	4,000	4A	64,610
	560	26,641	22,658	21,153	21,153	21,153	21,153	1.6	6.8	2,000	4,000	4A	64,610
	699	26,641	22,658	21,153	21,153	21,153	21,153	1.2	6.63	2,000	4,000	4A	64,610

305 R

305

51,330 lb•in

	i	T_{n2} [lb•in]						P_1	P_{TB}	n_1	n_{1max}		T_{2max}
		n_2•h	n_2•h	n_2•h	n_2•h	n_2•h	n_2•h						
	1:	10,000	25,000	50,000	100,000	500,000	1,000,000	[hp]	[hp]	[rpm]	[rpm]		[lb•in]
R2	9.23	41,156	35,846	35,403	34,252	21,153	17,170	47	24	1800	3800	4L	68,151
	10.9	46,909	41,776	41,776	38,501	23,720	19,295	47	25	1800	3800	4L	68,151
	13.7	49,564	44,608	39,563	37,881	27,880	22,658	47	23	1800	3800	4L	68,151
	15.9	41,510	35,403	31,863	31,863	30,978	25,136	47	20	1800	3800	4H	68,151
	19.2	33,633	29,207	27,437	27,437	26,552	24,694	43	19	1800	3800	4F	68,151
R3	25.7	41,422	39,740	39,740	39,740	33,633	27,349	20	14.6	2000	4000	4F	77,887
	31.5	41,599	39,740	39,740	39,740	33,190	26,906	20	15.0	2000	4000	4F	77,887
	37.1	51,334	48,679	48,502	46,909	37,262	30,270	20	15.2	2000	4000	4F	77,887
	42.6	41,599	39,386	39,209	39,209	32,128	26,110	20	13.4	2000	4000	4D	77,887
	46.6	49,564	44,608	39,563	38,943	37,881	30,889	20	14.2	2000	4000	4D	77,887
	50.3	48,945	47,352	46,909	46,289	36,023	29,296	20	13.5	2000	4000	4D	77,887
	54.2	41,510	35,403	31,863	31,863	31,420	30,624	20	13.1	2000	4000	4B	77,887
	63.1	49,564	44,608	39,563	38,943	37,881	30,889	20	12.7	2000	4000	4B	77,887
	73.3	41,510	35,403	31,863	31,863	31,420	30,624	16.4	11.8	2000	4000	4B	77,887
	78.7	49,564	43,369	39,563	38,943	37,881	30,889	19.1	11.7	2000	4000	4B	77,887
	91.5	41,510	35,403	31,863	31,863	31,420	30,624	13.7	10.9	2000	4000	4B	77,887
	114	39,209	35,403	31,863	31,863	30,978	30,624	11.5	10.6	2000	4000	4A	77,887
R4	129	51,334	48,502	48,502	46,909	37,793	30,712	13.9	10.2	2000	4000	4A	77,887
	148	41,599	39,740	39,740	39,740	33,633	27,349	9.9	9.3	2000	4000	4A	77,887
	158	51,334	48,679	48,502	46,909	37,262	30,270	11.5	10.2	2000	4000	4A	77,887
	185	41,599	39,740	39,740	39,740	33,633	27,349	8.0	8.6	2000	4000	4A	77,887
	214	51,334	48,679	48,502	46,909	37,262	30,270	8.6	9.3	2000	4000	4A	77,887
	231	41,510	35,403	31,863	31,863	31,420	30,624	6.3	9.1	2000	4000	4A	77,887
	255	41,510	35,403	31,863	31,863	31,420	30,624	5.7	8.4	2000	4000	4A	77,887

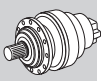

305 R

305

51,330 lb•in

	i	T_{n2} [lb•in]						P_1	P_{TB}	n_1	n_{1max}		T_{2max}
		n_2•h	n_2•h	n_2•h	n_2•h	n_2•h	n_2•h						
	1:	10,000	25,000	50,000	100,000	500,000	1,000,000	[hp]	[hp]	[rpm]	[rpm]		[lb•in]
R4	290	48,945	47,794	46,909	46,289	36,023	29,296	6.0	8.4	2000	4000	4A	77,887
	313	41,510	35,403	31,863	31,863	31,420	30,624	4.7	8.4	2000	4000	4A	77,887
	336	49,564	44,608	39,563	38,943	37,881	30,889	5.3	8.2	2000	4000	4A	77,887
	364	49,564	44,608	39,563	38,943	37,881	30,889	4.9	8.1	2000	4000	4A	77,887
	390	41,510	35,403	31,863	31,863	31,420	30,624	3.7	7.8	2000	4000	4A	77,887
	452	42,041	42,041	42,041	42,041	32,394	28,411	3.3	7.3	2000	4000	4A	77,887
	528	41,510	35,403	31,863	31,863	31,420	30,624	2.8	7.2	2000	4000	4A	77,887
	567	49,564	43,369	39,563	38,943	37,881	30,889	3.1	7.1	2000	4000	4A	77,887
	659	41,510	35,403	31,863	31,863	31,420	30,624	2.2	6.7	2000	4000	4A	77,887
	797	33,633	29,207	27,437	27,437	26,552	24,694	1.5	6.4	2000	4000	4A	77,887
	824	41,510	35,403	31,863	31,863	31,420	30,624	1.8	6.5	2000	4000	4A	77,887

306 R

323

95,940 lb•in

	i	T_{n2} [lb•in]						P_1	P_{TB}	n_1	n_{1max}		T_{2max}
		n_2•h	n_2•h	n_2•h	n_2•h	n_2•h	n_2•h						
	1:	10,000	25,000	50,000	100,000	500,000	1,000,000	[hp]	[hp]	[rpm]	[rpm]		[lb•in]
R2	9.23	41,156	35,846	35,403	34,252	21,153	17,170	47	25	1800	3800	4L	106,209
	10.9	46,909	41,776	41,776	38,501	23,720	19,295	47	27	1800	3800	4L	106,209
	13.7	57,530	52,396	52,396	45,139	27,880	22,658	47	24	1800	3800	4L	106,209
	15.9	64,610	60,982	57,795	50,184	30,978	25,136	47	22	1800	3800	4L	106,209
	19.2	61,955	52,219	48,679	47,794	35,314	28,676	47	20	1800	3800	4K	106,209
R3	33.2	70,983	70,983	70,983	70,983	50,272	40,890	47	19	2000	4000	4F	131,876
	39.2	86,472	82,666	82,666	82,312	54,078	43,900	47	20	2000	4000	4F	131,876
	46.3	92,225	87,180	87,180	84,967	60,716	49,299	47	20	2000	4000	4F	131,876
	58.1	84,613	80,542	80,542	80,542	59,123	48,060	47	18	2000	4000	4F	131,876
	67.5	69,832	67,177	67,177	67,177	58,592	47,617	34	17	2000	4000	4F	131,876
	72.9	89,216	82,755	73,461	70,363	60,274	48,945	36	17	2000	4000	4D	131,876
	84.7	84,436	82,755	73,461	70,363	60,274	48,945	31	16	2000	4000	4D	131,876
	98.5	76,382	65,230	57,795	57,530	57,176	48,502	24	14.5	2000	4000	4B	131,876
	119	75,231	65,230	57,795	57,530	57,176	48,502	20	13.6	2000	4000	4B	131,876
	144	61,955	52,219	48,679	48,679	44,608	44,608	14.3	12.9	2000	4000	4B	131,876
R4	158	92,225	87,180	87,180	84,967	60,716	49,299	20.0	13.3	2000	4000	4B	131,876
	168	73,638	68,151	68,151	66,646	52,662	42,749	15.2	12.5	2000	4000	4B	131,876
	181	83,640	83,640	83,640	83,640	61,690	50,095	15.6	11.9	2000	4000	4B	131,876
	214	92,225	87,180	87,180	84,967	60,716	49,299	14.8	11.9	2000	4000	4A	131,876
	230	69,832	67,177	67,177	67,177	58,592	47,617	10.3	11.8	2000	4000	4A	131,876
	249	89,216	82,755	73,461	70,363	60,274	48,945	12.1	11.9	2000	4000	4A	131,876
	289	84,436	82,755	73,461	70,363	60,274	48,945	10.2	11.1	2000	4000	4A	131,876
	312	69,832	67,177	67,177	67,177	58,592	47,617	7.6	10.6	2000	4000	4A	131,876
	389	75,231	67,177	67,177	67,177	58,592	47,617	6.9	9.8	2000	4000	4A	131,876
	420	89,216	82,755	73,461	70,363	60,274	48,945	7.2	9.9	2000	4000	4A	131,876
	455	76,382	65,230	57,795	57,530	57,176	48,502	5.9	9.6	2000	4000	4A	131,876
	488	84,436	82,755	73,461	70,363	60,274	48,945	6.0	9.4	2000	4000	4A	131,876
	550	75,231	65,230	57,795	57,530	57,176	48,502	4.9	9.1	2000	4000	4A	131,876
	590	84,082	75,231	69,036	69,036	60,274	48,945	5.1	9.0	2000	4000	4A	131,876
	665	61,955	52,219	48,679	48,679	44,608	44,608	3.3	8.8	2000	4000	4A	131,876
	830	61,955	52,219	48,679	48,679	44,608	44,608	2.7	8.2	2000	4000	4A	131,876

307 R | 341 | 138,780 lb•in

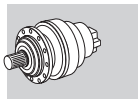

	i	T_{n2} [lb•in]						P_1	P_{TB}	n_1	n_{1max}		T_{2max}
		n_2•h	n_2•h	n_2•h	n_2•h	n_2•h	n_2•h						
	1:	10,000	25,000	50,000	100,000	500,000	1,000,000	[hp]	[hp]	[rpm]	[rpm]		[lb•in]
R2	13.0	79,657	75,231	73,196	70,452	58,149	47,263	114	*	1800	3800	5K	164,624
	15.5	100,899	94,615	85,233	84,259	65,850	53,459	114	*	1800	3800	5K	185,866
	19.8	123,911	112,405	100,013	95,500	78,329	63,637	114	*	1800	3800	5G	185,866
	23.5	97,358	84,967	77,002	77,002	72,930	66,292	99	*	1800	3800	5C	185,866
R3	31.6	79,657	79,657	79,657	73,461	48,591	39,474	47	23	2000	4000	4K	164,624
	37.7	138,780	131,788	109,749	89,127	54,963	44,696	47	22	2000	4000	4L	185,866
	44.6	138,780	131,788	123,291	100,102	61,778	50,184	47	23	2000	4000	4K	185,866
	55.9	138,780	131,788	131,788	117,361	72,399	58,857	47	21	2000	4000	4H	185,866
	65.0	129,841	123,999	123,999	119,574	80,453	65,319	47	20	2000	4000	4F	185,866
	71.8	131,345	112,405	100,013	95,500	82,666	67,177	47	20	2000	4000	4F	185,866
	78.6	108,864	108,864	108,864	108,864	84,613	68,770	47	18	2000	4000	4F	185,866
	83.4	131,345	112,405	100,013	95,500	82,666	67,177	45	19	2000	4000	4F	185,866
	99.0	97,358	84,967	77,002	77,002	72,930	66,292	31	18	2000	4000	4D	185,866
	120	97,358	84,967	77,002	77,002	72,930	66,292	27	16.6	2000	4000	4D	185,866
R4	152	138,780	131,788	131,788	119,574	84,613	68,770	20	15.9	2000	4000	4B	185,866
	165	131,345	112,405	100,013	95,500	82,666	67,177	20	15.5	2000	4000	4B	185,866
	191	138,780	131,788	131,788	119,574	84,613	68,770	20	15.0	2000	4000	4B	185,866
	206	138,780	131,788	131,788	119,574	84,613	68,770	20	14.4	2000	4000	4B	185,866
	232	131,345	112,405	100,013	95,500	82,666	67,177	19.1	13.8	2000	4000	4B	185,866
	258	138,780	131,788	131,788	119,574	84,613	68,770	18.4	13.7	2000	4000	4B	185,866
	284	131,345	112,405	100,013	95,500	82,666	67,177	15.6	13.7	2000	4000	4B	185,866
	300	132,761	123,999	123,999	119,574	84,613	68,770	15.9	12.9	2000	4000	4B	185,866
	331	131,345	112,405	100,013	95,500	82,666	67,177	13.4	13.3	2000	4000	4A	185,866
	363	108,864	108,864	108,864	108,864	84,613	68,770	10.8	12.2	2000	4000	4A	185,866
	413	131,345	112,405	100,013	95,500	82,666	67,177	10.7	12.5	2000	4000	4A	185,866
	453	132,761	122,140	114,175	110,634	84,613	68,770	10.5	11.5	2000	4000	4A	185,866
	490	97,358	84,967	77,002	77,002	72,930	66,292	7.1	11.7	2000	4000	4A	185,866
	581	126,831	112,493	100,013	95,500	82,666	67,177	7.6	11.2	2000	4000	4A	185,866
	690	97,358	84,967	77,002	77,002	72,930	66,292	5.1	10.6	2000	4000	4A	185,866

309 R | 359 | 205,690 lb•in

	i	T_{n2} [lb•in]						P_1	P_{TB}	n_1	n_{1max}		T_{2max}
		n_2•h	n_2•h	n_2•h	n_2•h	n_2•h	n_2•h						
	1:	10,000	25,000	50,000	100,000	500,000	1,000,000	[hp]	[hp]	[rpm]	[rpm]		[lb•in]
R2	13.0	86,737	80,719	73,196	70,452	58,149	47,263	114	*	1800	3800	5K	242,511
	15.5	100,899	94,615	85,233	84,259	65,850	53,459	114	*	1800	3800	5K	242,511
	19.8	123,911	117,449	108,599	108,599	78,329	63,637	114	*	1800	3800	5K	242,511
	23.5	145,683	124,530	110,634	109,484	88,330	71,780	114	*	1800	3800	5G	242,511
R3	31.6	113,290	108,953	97,004	78,772	48,591	39,474	47	32	2000	4000	4L	246,936
	37.7	140,107	135,062	109,749	89,127	54,963	44,696	47	31	2000	4000	4L	256,672
	44.6	165,244	151,790	123,291	100,102	61,778	50,184	47	31	2000	4000	4K	256,672
	55.9	163,827	151,702	144,533	117,361	72,399	58,857	47	29	2000	4000	4K	256,672
	65.0	129,841	126,566	126,566	123,999	80,453	65,319	47	27	2000	4000	4F	256,672
	71.8	194,539	168,695	149,932	139,753	86,206	70,009	47	28	2000	4000	4H	256,672
	83.4	161,969	160,199	149,932	143,294	95,854	77,798	47	26	2000	4000	4F	256,672
	99.0	150,463	127,451	115,060	115,060	108,068	87,711	47	24	2000	4000	4F	256,672
	120	150,463	127,451	115,060	115,060	109,484	90,986	41	23	2000	4000	4D	256,672
R4	152	191,353	188,167	188,167	164,447	101,430	82,400	20	21.2	2000	4000	4D	256,672
	165	194,539	168,695	149,932	143,294	113,378	92,136	20	20.6	2000	4000	4D	256,672
	191	163,827	154,888	154,888	151,702	98,774	80,276	20	20.0	2000	4000	4D	256,672
	206	191,353	188,167	188,167	164,447	101,430	82,400	20	19.0	2000	4000	4D	256,672
	232	161,969	160,199	149,932	143,294	113,378	92,136	20	18.3	2000	4000	4B	256,672
	258	163,827	154,888	154,888	151,702	98,774	80,276	20	18.0	2000	4000	4B	256,672
	284	161,969	160,199	149,932	143,294	113,378	92,136	20	18.2	2000	4000	4B	256,672
	331	194,539	168,695	149,932	143,294	113,378	92,136	20	17.6	2000	4000	4B	256,672
	374	129,841	126,566	126,566	123,999	97,889	79,568	12.3	15.7	2000	4000	4B	256,672
	413	194,539	168,695	149,932	143,294	113,378	92,136	16.1	16.2	2000	4000	4B	256,672
	457	150,463	127,451	115,060	115,060	109,484	90,986	11.8	15.7	2000	4000	4A	256,672
	490	150,463	127,451	115,060	115,060	109,484	90,986	11.0	15.4	2000	4000	4A	256,672
	581	139,842	139,842	139,842	132,761	113,378	92,136	8.6	14.6	2000	4000	4A	256,672
	690	150,463	127,451	115,060	115,060	109,484	90,986	7.8	13.9	2000	4000	4A	256,672

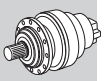

310M R

375

297,740 lb•in

	i	T_{n2} [lb•in]						P_1	P_{TB}	n_1	n_{1max}		T_{2max}
		n_2•h	n_2•h	n_2•h	n_2•h	n_2•h	n_2•h						
	1:	10,000	25,000	50,000	100,000	500,000	1,000,000	[hp]	[hp]	[rpm]	[rpm]		[lb•in]
R2	12.0	220,207	215,250	215,250	215,250	138,072	112,139	174	*	1500	2500	6L	421,296
	15.4	266,496	226,933	200,912	191,707	164,447	133,558	174	*	1500	2500	6K	421,296
	18.3	211,798	180,113	159,314	157,632	157,632	147,099	174	*	1500	2500	6G	421,296
	16.6	297,739	282,339	259,858	234,545	158,163	128,424	174	*	1500	2500	6K	421,296
	21.3	266,496	226,933	200,912	191,707	183,299	148,870	174	*	1500	2500	6K	421,296
	25.3	211,798	180,113	159,314	157,632	157,632	147,099	159	*	1500	2500	6G	421,296
R3	37.7	139,842	131,522	106,829	86,737	53,547	43,457	47	37	1800	3800	5C	421,296
	44.6	164,978	147,719	119,928	97,447	60,097	48,856	47	38	1800	3800	5C	421,296
	55.9	206,754	173,209	140,638	114,263	70,452	57,264	47	36	1800	3800	5C	421,296
	65.0	230,651	192,415	156,304	126,920	78,329	63,637	47	33	1800	3800	5C	421,296
	71.8	264,903	206,222	167,456	136,036	83,905	68,151	47	34	1800	3800	5C	421,296
	78.6	172,413	171,085	171,085	145,064	89,481	72,665	47	31	1800	3800	4H	421,296
	83.4	266,496	226,933	186,131	151,171	93,287	75,762	47	32	1800	3800	4K	421,296
	99.0	211,798	180,113	159,314	157,632	105,147	85,410	47	29	1800	3800	4H	421,296
	120	211,798	180,113	159,314	157,632	120,193	97,624	47	27	1800	3800	4F	421,296
R4	136	271,984	271,984	254,017	206,311	127,274	103,377	47	27	2000	4000	4F	421,296
	160	297,739	282,339	259,858	227,907	140,638	114,263	47	28	2000	4000	4F	421,296
	189	297,739	282,339	259,858	234,545	157,986	128,336	47	28	2000	4000	4F	421,296
	206	266,496	226,933	200,912	191,707	167,456	136,036	46	27	2000	4000	4F	421,296
	238	297,739	282,339	259,858	234,545	153,826	124,884	45	26	2000	4000	4D	421,296
	258	266,496	226,933	200,912	191,707	163,031	132,407	37	25	2000	4000	4D	421,296
	276	248,352	248,441	248,441	234,545	152,410	123,822	32	24	2000	4000	4D	421,296
	305	266,496	226,933	200,912	191,707	183,299	148,870	31	25	2000	4000	4D	421,296
	347	293,579	271,275	259,858	234,545	156,658	127,274	30	23	2000	4000	4D	421,296
	383	266,496	226,933	200,912	191,707	183,299	148,870	25	24	2000	4000	4B	421,296
	454	211,798	180,113	159,314	157,632	157,632	147,099	16.7	22	2000	4000	4B	421,296
	517	266,496	226,933	200,912	191,707	183,299	148,870	18.5	21	2000	4000	4B	421,296
	590	172,413	171,085	171,085	171,085	151,525	123,025	10.5	19.5	2000	4000	4A	421,296
	639	211,798	180,113	159,314	157,632	157,632	147,099	11.9	19.5	2000	4000	4A	421,296
	757	219,676	219,676	200,912	191,707	180,378	146,480	10.4	18.9	2000	4000	4A	421,296
	898	211,798	180,113	159,314	157,632	157,632	147,099	8.5	17.7	2000	4000	4A	421,296

311M R

393

435,550 lb•in

	i	T_{n2} [lb•in]						P_1	P_{TB}	n_1	n_{1max}		T_{2max}
		n_2•h	n_2•h	n_2•h	n_2•h	n_2•h	n_2•h						
	1:	10,000	25,000	50,000	100,000	500,000	1,000,000	[hp]	[hp]	[rpm]	[rpm]		[lb•in]
R2	12.0	220,207	215,250	215,250	215,250	138,072	112,139	201	*	1500	2500	6L	515,999
	15.4	276,055	276,055	276,055	266,496	164,447	133,558	201	*	1500	2500	6L	515,999
	18.3	322,787	274,727	243,219	240,652	185,423	150,640	201	*	1500	2500	6K	515,999
	16.6	401,736	388,548	315,529	256,318	158,163	128,424	201	*	1500	2500	6L	515,999
	21.3	423,154	366,421	324,734	305,262	188,344	152,941	201	*	1500	2500	6K	515,999
	25.3	322,787	274,727	243,219	240,652	212,329	172,501	201	*	1500	2500	6G	515,999
R3	53.0	286,853	286,941	286,941	245,077	151,259	122,848	114	32	2000	4000	5G	515,999
	63.2	366,067	351,109	341,462	277,383	171,174	139,045	114	31	2000	4000	5G	515,999
	68.0	367,306	366,421	324,734	291,898	180,113	146,303	114	31	2000	4000	5G	515,999
	81.1	423,154	366,421	324,734	309,865	203,833	165,509	114	30	2000	4000	5G	515,999
	96.3	296,677	283,401	283,401	283,401	212,329	172,501	104	29	2000	4000	5C	515,999
	104	423,154	366,421	324,734	309,865	242,688	197,106	114	30	2000	4000	5C	515,999
	124	365,093	364,385	324,734	309,865	252,866	205,337	103	28	2000	4000	5B	515,999
	147	322,787	274,727	243,219	240,652	240,652	209,497	74	27	2000	4000	5B	515,999
R4	154	435,545	342,081	277,737	225,606	139,222	113,113	47	32	2000	4000	5B	515,999
	182	435,545	384,211	311,989	253,397	156,393	127,008	47	32	2000	4000	4H	515,999
	198	423,154	366,421	324,734	268,709	165,775	134,708	47	31	2000	4000	4F	515,999
	229	435,545	412,356	365,890	297,120	183,299	148,958	47	30	2000	4000	4F	515,999
	266	435,545	412,356	402,267	330,221	203,656	165,509	47	28	2000	4000	4F	515,999
	294	423,154	366,421	324,734	309,865	218,348	177,369	47	29	2000	4000	4D	515,999
	341	423,154	366,421	324,734	309,865	242,599	197,018	44	27	2000	4000	4D	515,999
	413	423,154	366,421	324,734	309,865	261,097	212,064	37	26	2000	4000	4D	515,999

311M R | 393 | 435,550 lb•in

	i	T_{n2} [lb•in]						P_1	P_{TB}	n_1	n_{1max}		T_{2max}
		n_2•h	n_2•h	n_2•h	n_2•h	n_2•h	n_2•h						
	1:	10,000	25,000	50,000	100,000	500,000	1,000,000	[hp]	[hp]	[rpm]	[rpm]		[lb•in]
R4	438	423,154	366,421	324,734	309,865	256,052	207,904	35	26	2000	4000	4D	515,999
	490	296,677	283,401	283,401	283,401	212,329	172,501	22	24.3	2000	4000	4B	515,999
	520	365,093	364,385	324,734	309,865	252,866	205,337	25	24.8	2000	4000	4B	515,999
	629	365,093	364,385	324,734	309,865	252,866	205,337	21	23.5	2000	4000	4B	515,999
	746	322,787	274,727	243,219	240,652	240,652	209,497	15.5	22.5	2000	4000	4B	515,999

313M R | 411 | 539,360 lb•in

	i	T_{n2} [lb•in]						P_1	P_{TB}	n_1	n_{1max}		T_{2max}
		n_2•h	n_2•h	n_2•h	n_2•h	n_2•h	n_2•h						
	1:	10,000	25,000	50,000	100,000	500,000	1,000,000	[hp]	[hp]	[rpm]	[rpm]		[lb•in]
R2	12.2	222,685	217,905	217,905	217,905	139,311	113,201	201	*	1500	2500	6L	763,820
	15.9	283,844	283,844	283,844	271,807	167,722	136,213	201	*	1500	2500	6L	763,820
	19.1	341,462	302,342	267,824	267,293	190,999	155,154	201	*	1500	2500	6L	763,820
	16.8	406,249	392,000	318,361	258,530	159,579	129,575	201	*	1500	2500	6L	929,329
	22.0	505,643	431,032	381,910	311,281	192,061	156,039	201	*	1500	2500	6L	929,329
	26.4	354,915	302,342	267,824	267,293	218,702	177,635	201	*	1500	2500	6K	929,329
R3	53.7	317,122	296,677	296,677	247,290	152,587	123,911	114	39	1800	3800	5G	929,329
	64.0	370,138	355,623	344,560	279,861	172,678	140,284	114	38	1800	3800	5G	929,329
	69.9	399,877	389,433	366,510	297,651	183,653	149,224	114	36	1800	3800	5G	929,329
	82.2	460,505	459,531	410,232	333,231	205,603	167,014	114	38	1800	3800	5G	929,329
	97.5	449,707	430,500	430,500	375,714	231,801	188,255	114	36	1800	3800	5E	929,329
	107	505,643	431,032	381,910	366,775	247,555	201,089	114	35	1800	3800	5E	929,329
	127	505,643	431,032	381,910	366,775	279,064	226,668	114	33	1800	3800	5C	929,329
	153	354,915	302,342	267,824	267,293	267,293	258,088	71	32	1800	3800	5B	929,329
R4	185	510,246	387,486	314,733	255,698	157,720	128,159	47	39	2000	4000	4K	929,329
	201	539,365	410,852	333,673	271,098	167,279	135,859	47	38	2000	4000	4K	929,329
	237	539,365	461,567	374,829	304,466	187,901	152,587	47	38	2000	4000	4F	929,329
	281	449,707	430,500	422,712	343,232	211,798	172,059	47	35	2000	4000	4F	929,329
	309	505,643	431,032	381,910	366,598	226,137	183,742	47	35	2000	4000	4F	929,329
	346	539,365	510,334	488,384	396,602	244,723	198,788	47	33	2000	4000	4F	929,329
	387	505,643	431,032	381,910	366,775	265,257	215,427	47	33	2000	4000	4D	929,329
	450	505,643	431,032	381,910	366,775	294,730	239,324	40	31	2000	4000	4D	929,329
	496	449,707	430,500	430,500	430,500	293,845	238,705	32	29	2000	4000	4D	929,329
	535	505,643	431,032	381,910	366,775	332,257	269,859	34	29	2000	4000	4D	929,329
	647	505,643	431,032	381,910	366,775	353,764	287,295	28	27	2000	4000	4B	929,329
	778	354,915	302,342	267,824	267,293	267,293	267,293	16.3	26.3	2000	4000	4B	929,329

314M R | 429 | 713,720 lb•in

	i	T_{n2} [lb•in]						P_1	P_{TB}	n_1	n_{1max}		T_{2max}
		n_2•h	n_2•h	n_2•h	n_2•h	n_2•h	n_2•h						
	1:	10,000	25,000	50,000	100,000	500,000	1,000,000	[hp]	[hp]	[rpm]	[rpm]		[lb•in]
R3	51.1	704,661	669,966	588,823	478,224	295,119	239,678	174	57	1500	2500	6G	1,017,836
	65.5	690,571	641,078	641,078	569,563	351,410	285,419	174	57	1500	2500	6G	1,017,836
	77.8	547,401	526,584	526,513	526,513	386,884	314,237	174	52	1500	2500	6G	1,017,836
	82.3	648,866	597,390	551,437	528,567	411,949	334,629	174	54	1500	2500	6G	1,017,836
	97.6	648,795	597,390	551,437	528,567	453,512	368,333	168	49	1500	2500	6G	1,017,836
	113	559,863	478,153	424,340	419,526	419,526	369,891	125	48	1500	2500	6G	1,017,836
	70.7	713,724	669,966	669,966	547,755	337,886	274,515	174	57	1500	2500	6G	1,017,836
	90.7	690,500	641,078	641,078	629,607	391,628	318,061	174	55	1500	2500	6L	1,017,836
	108	547,401	526,584	526,513	526,513	386,884	314,237	131	50	1500	2500	6K	1,017,836
	114	648,866	597,390	551,437	528,567	459,035	372,864	146	52	1500	2500	6K	1,017,836
	135	648,795	597,390	551,437	528,567	453,512	368,333	124	47	1500	2500	6G	1,017,836
	157	559,863	478,153	424,340	419,526	419,526	369,891	93	46	1500	2500	6G	1,017,836
R4	160	462,452	351,198	285,260	231,713	143,028	116,122	47	60	1800	3800	4L	1,017,836

C

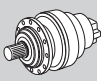

314M R

429

713,720 lb•in

	i	T_{n2} [lb•in]						P_1	P_{TB}	n_1	n_{1max}		T_{2max}
		n_2•h	n_2•h	n_2•h	n_2•h	n_2•h	n_2•h						
	1:	10,000	25,000	50,000	100,000	500,000	1,000,000	[hp]	[hp]	[rpm]	[rpm]		[lb•in]
R4	189	519,451	394,478	320,397	260,301	160,641	130,460	47	60	1800	3800	4L	1,017,836
	238	609,020	462,452	375,626	305,085	188,255	152,941	47	56	1800	3800	4K	1,017,836
	276	676,728	513,875	417,401	339,072	209,232	169,934	47	52	1800	3800	4K	1,017,836
	354	805,861	611,852	497,058	403,771	249,149	202,417	47	50	1800	3800	4K	1,017,836
	421	684,251	658,230	560,607	455,194	280,834	228,172	42	46	1800	3800	4H	1,017,836
	445	648,866	574,095	466,116	378,670	233,660	189,831	47	47	1800	3800	4K	1,017,836
	528	648,866	597,390	525,735	426,889	263,398	213,976	40	44	1800	3800	4H	1,017,836
	614	559,863	478,153	424,340	419,526	292,783	237,767	29	43	1800	3800	4F	1,017,836

315M R

445

892,160 lb•in

	i	T_{n2} [lb•in]						P_1	P_{TB}	n_1	n_{1max}		T_{2max}
		n_2•h	n_2•h	n_2•h	n_2•h	n_2•h	n_2•h						
	1:	10,000	25,000	50,000	100,000	500,000	1,000,000	[hp]	[hp]	[rpm]	[rpm]		[lb•in]
R3	51.1	880,738	837,458	736,028	597,780	368,899	299,598	201	56	1500	2500	6K	1,194,851
	65.5	892,156	837,458	837,458	711,954	439,263	356,774	201	56	1500	2500	6G	1,194,851
	77.8	892,156	837,458	837,458	787,009	495,288	402,267	201	54	1500	2500	6G	1,194,851
	82.3	811,083	746,738	689,296	660,708	514,937	418,286	201	53	1500	2500	6E	1,194,851
	97.6	811,083	746,738	689,296	660,708	575,830	467,762	201	50	1500	2500	6E	1,194,851
	113	699,829	597,691	530,425	524,407	524,407	462,363	156	49	1500	2500	6B	1,194,851
	70.7	892,156	837,458	837,458	684,694	422,358	343,144	201	56	1500	2500	6G	1,194,851
	90.7	892,156	837,458	837,458	787,009	503,077	408,639	201	55	1500	2500	6E	1,194,851
	108	892,156	837,458	837,458	787,009	567,245	460,682	201	52	1500	2500	6E	1,194,851
	114	810,994	746,738	689,296	660,708	575,830	467,762	183	51	1500	2500	6C	1,194,851
	135	810,994	746,738	689,296	660,708	575,830	467,762	156	49	1500	2500	6C	1,194,851
	157	699,829	597,691	530,425	524,407	524,407	462,363	116	48	1500	2500	6B	1,194,851
R4	225	892,156	837,458	806,038	654,690	403,948	328,097	121	50	1800	3800	5E	1,194,851
	269	892,156	837,458	837,458	740,808	457,141	371,289	107	48	1800	3800	5C	1,194,851
	345	892,156	837,458	837,458	787,009	544,321	442,183	83	46	1800	3800	5B	1,194,851
	409	892,156	837,458	837,458	787,009	567,068	460,593	70	44	1800	3800	5B	1,194,851
	525	892,156	837,458	837,458	787,009	596,187	484,313	55	42	1800	3800	5B	1,194,851
	623	892,156	837,458	837,458	787,009	596,187	484,313	46	40	1800	3800	5B	1,194,851
	659	811,083	746,738	689,296	660,708	575,830	467,762	40	40	1800	3800	5B	1,194,851
	782	811,083	746,738	689,296	660,708	575,830	467,762	33	39	1800	3800	5B	1,194,851
	909	699,829	597,691	530,425	524,407	524,407	462,363	25	38.0	1800	3800	5B	1,194,851

316M R

461

1,189,450 lb•in

	i	T_{n2} [lb•in]						P_1	P_{TB}	n_1	n_{1max}		T_{2max}
		n_2•h	n_2•h	n_2•h	n_2•h	n_2•h	n_2•h						
	1:	10,000	25,000	50,000	100,000	500,000	1,000,000	[hp]	[hp]	[rpm]	[rpm]		[lb•in]
R3	51.1	880,827	880,827	736,028	597,780	368,899	299,598	201	62	1500	2500	6K	1,699,344
	64.1	1,081,473	985,088	862,860	700,802	432,448	351,286	201	60	1500	2500	6K	1,699,344
	65.5	1,127,320	1,079,083	876,401	711,866	439,263	356,774	201	62	1500	2500	6K	1,699,344
	77.8	1,045,362	1,005,888	988,098	802,498	495,199	402,267	201	60	1500	2500	6G	1,699,344
	82.3	1,081,385	985,088	880,915	834,626	514,937	418,286	201	59	1500	2500	6G	1,699,344
	97.6	1,081,385	985,088	880,915	880,915	580,609	471,568	201	56	1500	2500	6G	1,699,344
	70.7	1,189,541	1,037,839	842,768	684,517	422,358	343,144	201	63	1500	2500	6G	1,699,344
	88.7	1,081,473	985,088	880,915	802,675	495,199	402,267	201	59	1500	2500	6G	1,699,344
	90.7	1,189,541	1,116,611	1,003,852	815,154	502,988	408,639	201	61	1500	2500	6G	1,699,344
	108	1,045,362	1,005,888	1,005,799	919,239	567,068	460,682	201	58	1500	2500	6E	1,699,344
	114	1,081,473	985,088	880,915	880,915	589,814	479,003	201	57	1500	2500	6E	1,699,344
	135	1,081,473	985,088	880,915	880,915	664,957	540,073	201	54	1500	2500	6E	1,699,344
R4	225	1,149,624	992,346	805,949	654,690	403,948	328,097	114	54	1800	3800	5G	1,699,344
	269	1,189,541	1,116,611	912,070	740,808	457,141	371,289	114	52	1800	3800	5E	1,699,344
	289	1,189,541	1,116,611	959,775	779,574	481,038	390,761	114	52	1800	3800	5E	1,699,344
	337	1,081,385	985,088	880,915	868,436	535,824	435,280	103	50	1800	3800	5C	1,699,344

316M R

461

1,189,450 lb•in

	i	T_{n2} [lb•in]						P_1	P_{TB}	n_1	n_{1max}		T_{2max}
		n_2•h	n_2•h	n_2•h	n_2•h	n_2•h	n_2•h						
	1:	10,000	25,000	50,000	100,000	500,000	1,000,000	[hp]	[hp]	[rpm]	[rpm]		[lb•in]
R4	363	1,081,473	985,088	880,915	880,915	563,881	458,026	96	50	1800	3800	5B	1,699,344
	430	1,081,473	985,088	880,915	880,915	635,749	516,353	81	47	1800	3800	5B	1,699,344
	443	1,189,541	1,116,611	1,094,838	1,049,522	648,229	526,531	87	48	1800	3800	5B	1,699,344
	525	1,189,541	1,116,611	1,094,838	1,049,522	675,312	548,569	73	45	1800	3800	5B	1,699,344
	623	1,045,362	1,005,888	1,005,799	1,005,799	688,765	559,456	54	43	1800	3800	5B	1,699,344
	659	1,081,385	985,088	880,915	880,915	767,803	623,624	53	43	1800	3800	5B	1,699,344
	782	1,081,473	985,088	880,915	880,915	767,803	623,624	45	42	1800	3800	5B	1,699,344

317M R

473

1,836,440 lb•in

	i	T_{n2} [lb•in]						P_1	P_{TB}	n_1	n_{1max}		T_{2max}
		n_2•h	n_2•h	n_2•h	n_2•h	n_2•h	n_2•h						
	1:	10,000	25,000	50,000	100,000	500,000	1,000,000	[hp]	[hp]	[rpm]	[rpm]		[lb•in]
R3	49.8	858,788	858,788	723,018	587,159	362,350	294,287	201	64	1500	2500	6K	3,478,345
	64.9	1,116,257	1,071,560	870,294	706,909	436,165	354,296	201	65	1500	2500	6K	3,478,345
	78.1	1,113,424	1,073,596	991,018	804,887	496,616	403,417	201	64	1500	2500	6K	3,478,345
	83.3	1,427,626	1,276,013	1,036,334	841,795	519,451	421,915	201	63	1500	2500	6K	3,478,345
	100	1,380,274	1,380,274	1,180,159	958,448	591,407	480,419	201	62	1500	2500	6G	3,478,345
	119	1,329,914	1,137,144	1,010,136	999,781	666,816	541,577	201	58	1500	2500	6E	3,478,345
	68.9	1,341,951	1,019,164	827,811	672,391	414,923	337,037	201	68	1500	2500	6K	3,478,345
	89.8	1,591,630	1,227,245	996,594	809,490	499,536	405,807	201	65	1500	2500	6K	3,478,345
	108	1,113,336	1,073,596	1,073,596	921,894	568,749	462,009	201	62	1500	2500	6G	3,478,345
	115	1,731,561	1,461,436	1,186,709	963,935	594,770	483,251	201	62	1500	2500	6G	3,478,345
	139	1,380,186	1,380,274	1,318,319	1,097,847	677,259	550,163	201	60	1500	2500	6E	3,478,345
	165	1,329,914	1,137,144	1,010,136	999,781	763,731	620,261	201	56	1500	2500	6C	3,478,345
R4	220	1,229,015	974,733	791,700	643,095	396,779	322,344	121	57	1800	3800	5G	3,478,345
	262	1,451,966	1,102,980	895,873	727,709	448,999	364,739	121	55	1800	3800	5G	3,478,345
	336	1,729,083	1,313,451	1,066,869	866,577	534,674	434,306	121	54	1800	3800	5G	3,478,345
	399	1,714,213	1,480,819	1,202,728	976,946	602,825	489,623	121	51	1800	3800	5E	3,478,345
	438	1,591,630	1,477,456	1,284,332	1,043,149	643,715	522,814	117	51	1800	3800	5C	3,478,345
	520	1,591,630	1,477,456	1,447,983	1,175,999	725,673	589,460	99	48	1800	3800	5B	3,478,345
	626	1,113,336	1,073,596	1,073,596	1,073,596	826,306	671,152	57	46	1800	3800	5B	3,478,345
	677	1,380,274	1,380,274	1,318,319	1,259,904	872,772	708,857	66	47	1800	3800	5B	3,478,345
	803	1,380,186	1,380,274	1,318,319	1,259,904	983,938	799,223	55	45	1800	3800	5B	3,478,345
	953	1,329,914	1,137,144	1,010,136	999,781	999,781	842,503	45	42	1800	3800	5B	3,478,345

318M R

485

2,622,540 lb•in

	i	T_{n2} [lb•in]						P_1	P_{TB}	n_1	n_{1max}		T_{2max}
		n_2•h	n_2•h	n_2•h	n_2•h	n_2•h	n_2•h						
	1:	10,000	25,000	50,000	100,000	500,000	1,000,000	[hp]	[hp]	[rpm]	[rpm]		[lb•in]
R4	225	2,633,541	2,305,974	2,014,342	1,635,884	1,009,428	820,022	201	83	1500	2500	6E	4,425,375
	288	2,633,541	2,305,974	2,051,073	1,948,404	1,202,020	976,415	201	81	1500	2500	6E	4,425,375
	342	2,633,452	2,305,974	2,051,073	1,981,860	1,355,404	1,100,856	201	77	1500	2500	6C	4,425,375
	362	2,633,541	2,305,974	2,051,073	1,981,860	1,409,393	1,144,667	196	77	1500	2500	6C	4,425,375
	430	2,633,541	2,305,974	2,051,073	1,981,860	1,421,342	1,154,492	165	73	1500	2500	6B	4,425,375
	499	2,342,882	2,267,208	2,051,073	1,981,860	1,421,342	1,154,492	126	71	1500	2500	6B	4,425,375
	311	2,633,541	2,305,974	2,051,073	1,874,058	1,155,996	939,153	201	81	1500	2500	6C	4,425,375
	399	2,633,364	2,305,974	2,051,073	1,981,860	1,377,088	1,118,381	177	77	1500	2500	6B	4,425,375
	474	2,633,541	2,305,974	2,051,073	1,981,860	1,421,342	1,154,492	149	73	1500	2500	6B	4,425,375
	501	2,633,541	2,305,974	2,051,073	1,981,860	1,421,342	1,154,492	141	74	1500	2500	6B	4,425,375
	595	2,633,541	2,305,974	2,051,073	1,981,860	1,421,342	1,154,492	119	71	1500	2500	6B	4,425,375
	691	2,342,882	2,267,208	2,051,073	1,981,860	1,421,342	1,154,492	91	68	1500	2500	6B	4,425,375

C

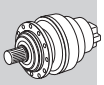

319 R

497

4,170,380 lb•in

	i	T_{n2} [lb•in]						P_1	P_{TB}	n_1	n_{1max}		T_{2max}
		n_2•h	n_2•h	n_2•h	n_2•h	n_2•h	n_2•h						
	1:	10,000	25,000	50,000	100,000	500,000	1,000,000	[hp]	[hp]	[rpm]	[rpm]		[lb•in]
R4	249	3,507,464	2,663,899	2,163,831	1,757,582	1,084,571	881,004	201	114	1500	2500	6G	6,018,510
	320	4,170,385	3,172,197	2,576,630	2,092,937	1,291,501	1,049,079	201	110	1500	2500	6G	6,018,510
	379	3,921,148	3,397,803	2,759,929	2,241,718	1,383,195	1,123,514	201	102	1500	2500	6E	6,018,510
	401	4,170,296	3,397,803	2,759,929	2,241,718	1,383,195	1,123,514	201	105	1500	2500	6E	6,018,510
	475	3,153,080	2,706,648	2,411,210	2,205,961	1,361,157	1,105,547	179	99	1500	2500	6C	6,018,510
	563	3,153,345	2,706,648	2,411,210	2,205,961	1,361,157	1,105,547	151	96	1500	2500	6B	6,018,510
	655	2,977,481	2,706,648	2,411,210	2,205,961	1,361,157	1,105,547	122	92	1500	2500	6B	6,018,510
	345	4,017,621	3,050,499	2,477,944	2,012,749	1,242,026	1,009,074	201	110	1500	2500	6E	6,018,510
	442	4,170,119	3,397,803	2,759,929	2,241,718	1,383,195	1,123,514	201	105	1500	2500	6E	6,018,510
	525	3,921,148	3,397,803	2,759,929	2,241,718	1,383,195	1,123,514	201	96	1500	2500	6C	6,018,510
	555	4,170,385	3,397,803	2,759,929	2,241,718	1,383,195	1,123,514	201	99	1500	2500	6B	6,018,510
	657	3,153,080	2,706,648	2,411,210	2,205,961	1,361,157	1,105,547	129	95	1500	2500	6B	6,018,510
	780	3,153,345	2,706,648	2,411,210	2,205,961	1,361,157	1,105,547	109	92	1500	2500	6B	6,018,510
	906	2,977,481	2,706,648	2,411,210	2,205,961	1,361,157	1,105,547	88	86	1500	2500	6B	6,018,510

321 R

509

5,803,790 lb•in

	i	T_{n2} [lb•in]						P_1	P_{TB}	n_1	n_{1max}		T_{2max}
		n_2•h	n_2•h	n_2•h	n_2•h	n_2•h	n_2•h						
	1:	10,000	25,000	50,000	100,000	500,000	1,000,000	[hp]	[hp]	[rpm]	[rpm]		[lb•in]
R4	221	3,310,181	2,489,716	2,003,810	1,609,066	983,584	799,400	201	151	1500	2000	6K	8,266,601
	288	3,960,711	3,010,140	2,376,426	1,918,843	1,184,142	962,431	201	143	1500	2000	6G	8,266,601
	347	4,481,135	3,337,618	2,717,180	2,193,216	1,348,323	1,096,608	201	136	1500	2000	6G	8,266,601
	370	4,677,621	3,558,887	2,812,768	2,338,368	1,410,190	1,146,172	201	136	1500	2000	6G	8,266,601
	446	5,198,134	3,942,301	3,243,800	2,601,855	1,605,792	1,305,132	201	129	1500	2000	6G	8,266,601
	529	4,747,100	4,452,281	3,630,578	2,933,404	1,810,421	1,471,526	201	122	1500	2000	6E	8,266,601
	306	3,552,160	2,696,469	2,190,384	1,779,266	1,097,936	892,067	201	148	1500	2000	6G	8,266,601
	399	4,276,505	3,246,190	2,636,904	2,142,059	1,321,860	1,074,039	201	135	1500	2000	6G	8,266,601
	481	4,869,417	3,696,073	3,002,440	2,438,913	1,505,070	1,222,908	178	128	1500	2000	6C	8,266,601
	512	5,092,810	3,865,654	3,140,158	2,550,786	1,574,106	1,279,022	168	130	1500	2000	6C	8,266,601
	617	5,799,011	4,401,389	3,575,349	2,904,374	1,792,277	1,456,302	160	123	1500	2000	6C	8,266,601
	732	4,747,188	4,578,404	3,718,820	3,020,672	1,863,791	1,513,921	151	116	1500	2000	6B	8,266,601

26 DIMENSIONS

Metric output versions are available also in combination with NEMA motor adaptor or inches solid input and viceversa.

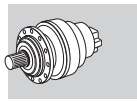

Metric

300 L

	Hydraulic motor							542			Kg
	MG										
cm³	050	080	100	125	160	200	250				
	M1							M2	M3	M4	
300 L1	162	167	171	175	181	—	—	113	60	1/4G	14
300 L2	162	167	171	—	—	—	—	113	60	1/4G	14

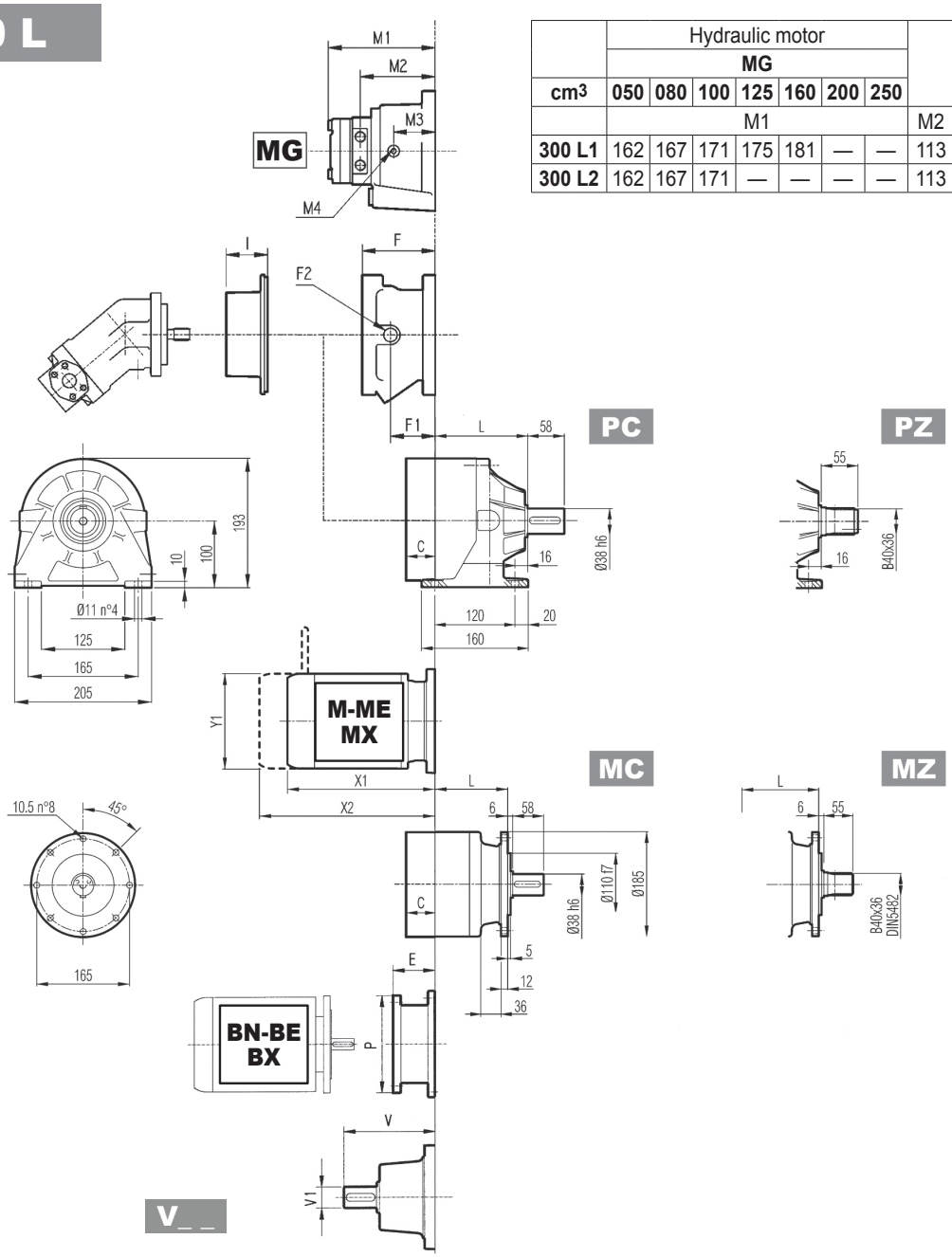

Dimensions are in mm

	L				Kg			
	MC - MZ	PC - PZ	HC - HZ	FP - FZ - FDK	MC - MZ	PC - PZ	HC - HZ	FP - FZ - FDK
300 L1	80	86	115	80	18	23	20	16
300 L2	133	139	168	133	22	27	24	20
300 L3	186	192	221	186	26	31	28	24
300 L4	239	245	274	239	30	35	32	28

	V	V1	Kg	V	V1	Kg	C	Input	I	F	F1	F2	Type	Input	Kg
300 L1	137.5	24	6	158	38	7	37	A	532	105	65	1/4 G	4	A	10
300 L2	137.5	24	6	158	38	7	37	A		105	65	1/4 G	4	A	10
300 L3	137.5	24	6	158	38	7	37	A		105	65	1/4 G	4	A	10
300 L4	137.5	24	6	158	38	7	37	A		105	65	1/4 G	4	A	10

300 L

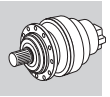

Metric

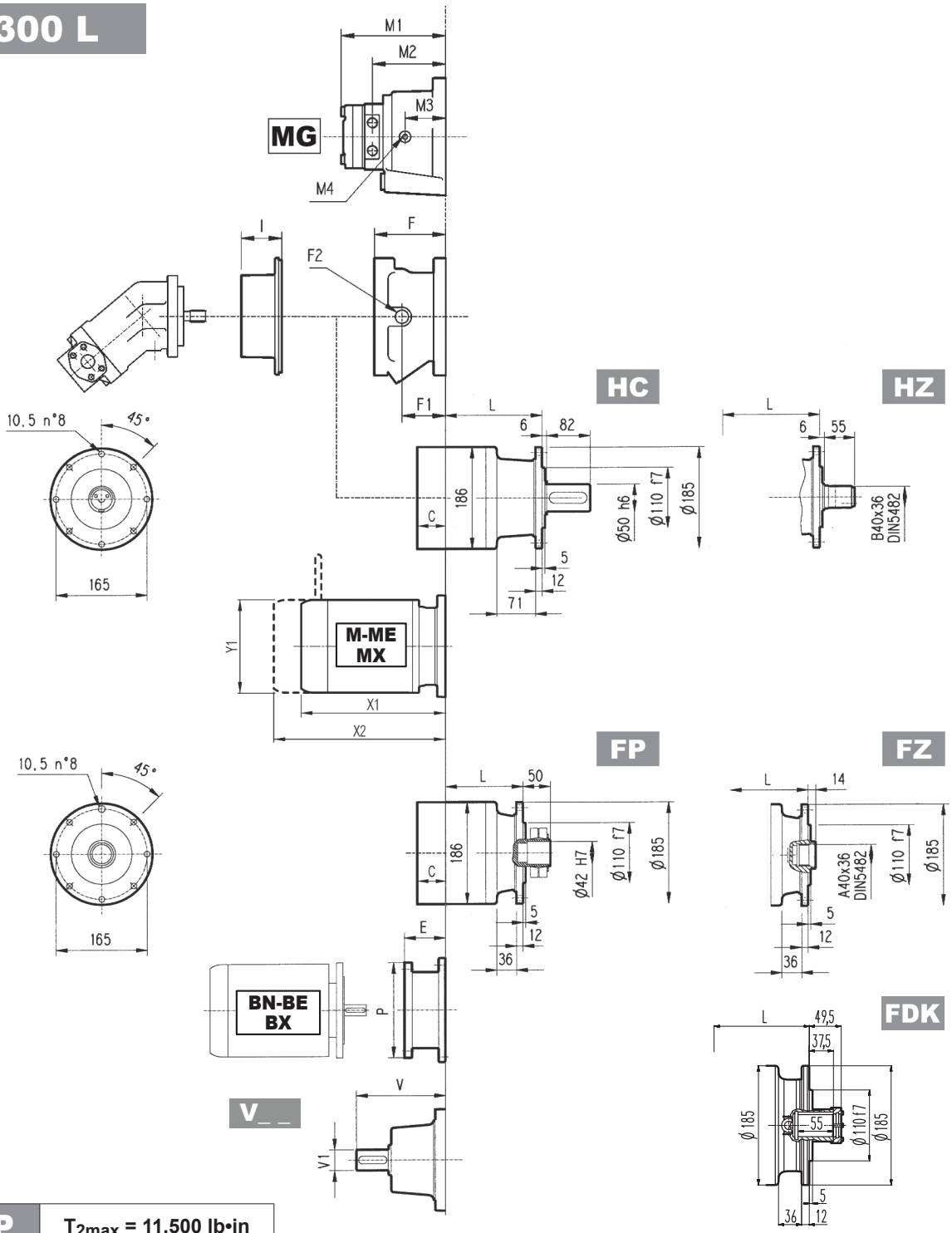

FP | T_{2max} = 11,500 lb•in

Dimensions are in mm

	P71		P80		P90		P100		P112		P132	
	E	P	E	P	E	P	E	P	E	P	E	P
300 L1	65	160	84	200	84	200	94	250	94	250	114	300
300 L2	65	160	84	200	84	200	94	250	94	250	114	300
300 L3	65	160	84	200	84	200	94	250	94	250	114	300
300 L4	65	160	84	200	84	200	94	250	94	250	114	300

	S1 + M1			S2 + ME2S			S3 + ME3S			S3 + ME3L			S4 + ME4/MX4		
	X1	X2	Y1	X1	X2	Y1	X1	X2	Y1	X1	X2	Y1	X1	X2	Y1
300 L1	253	314	138	280	—	156	325	—	195	357	—	195	460	—	258
300 L2	253	314	138	280	—	156	325	—	195	357	—	195	460	—	258
300 L3	253	314	138	280	—	156	325	—	195	357	—	195	460	—	258
300 L4	253	314	138	280	—	156	325	—	195	357	—	195	460	—	258

Bonfiglioli Riduttori

300 R

	Hydraulic motor										
	MG										
cm³	050	080	100	125	160	200	250	542			Kg
	M1							M2	M3	M4	
300 R2	162	167	171	—	—	—	—	113	60	1/4G	14

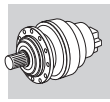

Metric

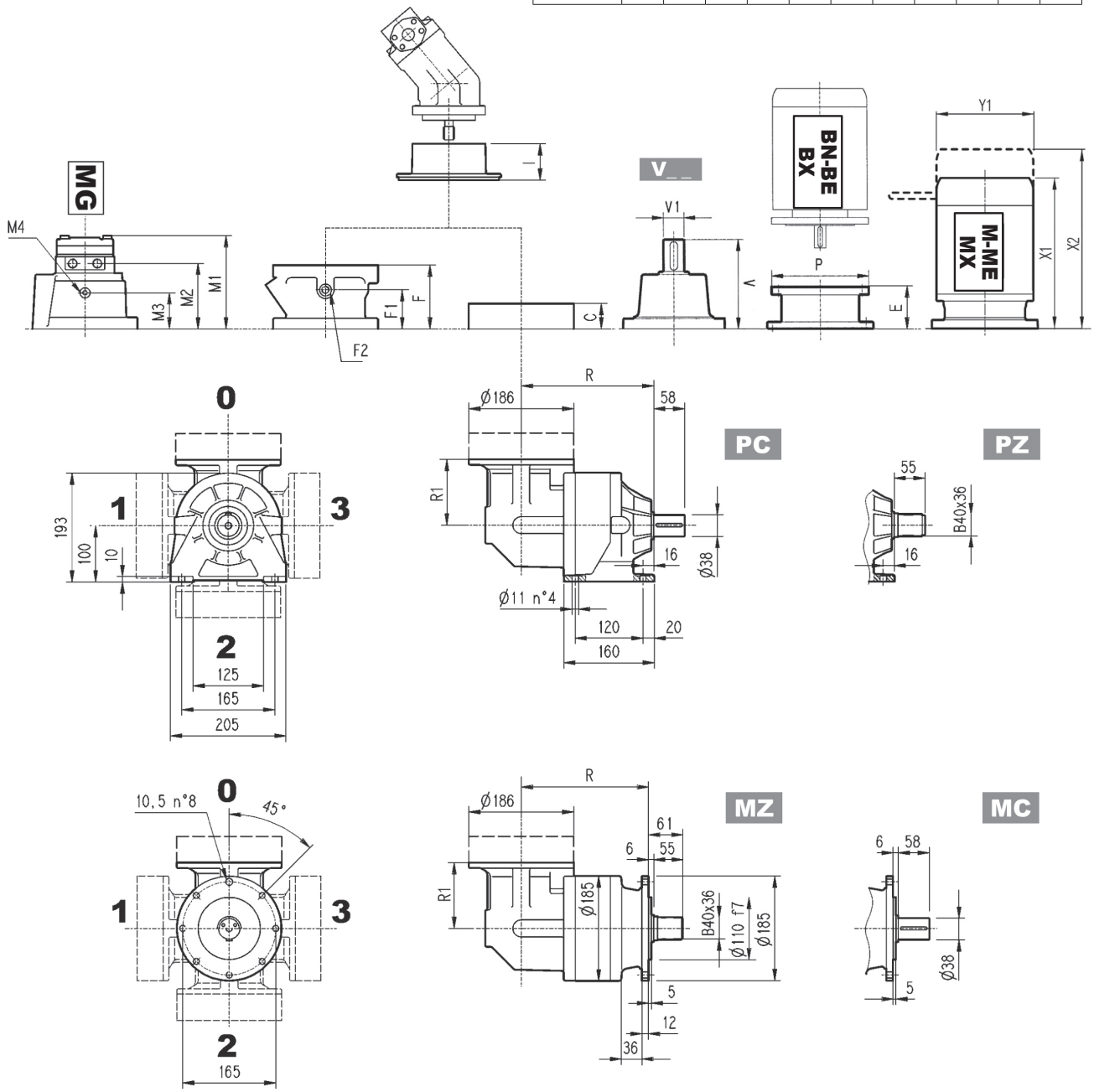

Dimensions are in mm

	R				R1	Kg			
	MC - MZ	PC - PZ	HC - HZ	FP - FZ - FDK		MC - MZ	PC - PZ	HC - HZ	FP - FZ - FDK
300 R2	172	178	207	172	122	32	37	34	30
300 R3	225	231	260	225	122	36	41	38	34
300 R4	278	284	313	278	122	40	45	42	38

	V	V1	Kg	V	V1	Kg	C	Input	I	F	F1	F2	Type	Input	Kg
300 R2	137.5	24	6	158	38	7	37	A		105	65	1/4 G	4	A	10
300 R3	137.5	24	6	158	38	7	37	A		105	65	1/4 G	4	A	10
300 R4	137.5	24	6	158	38	7	37	A	532	105	65	1/4 G	4	A	10

300 R

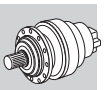

Metric

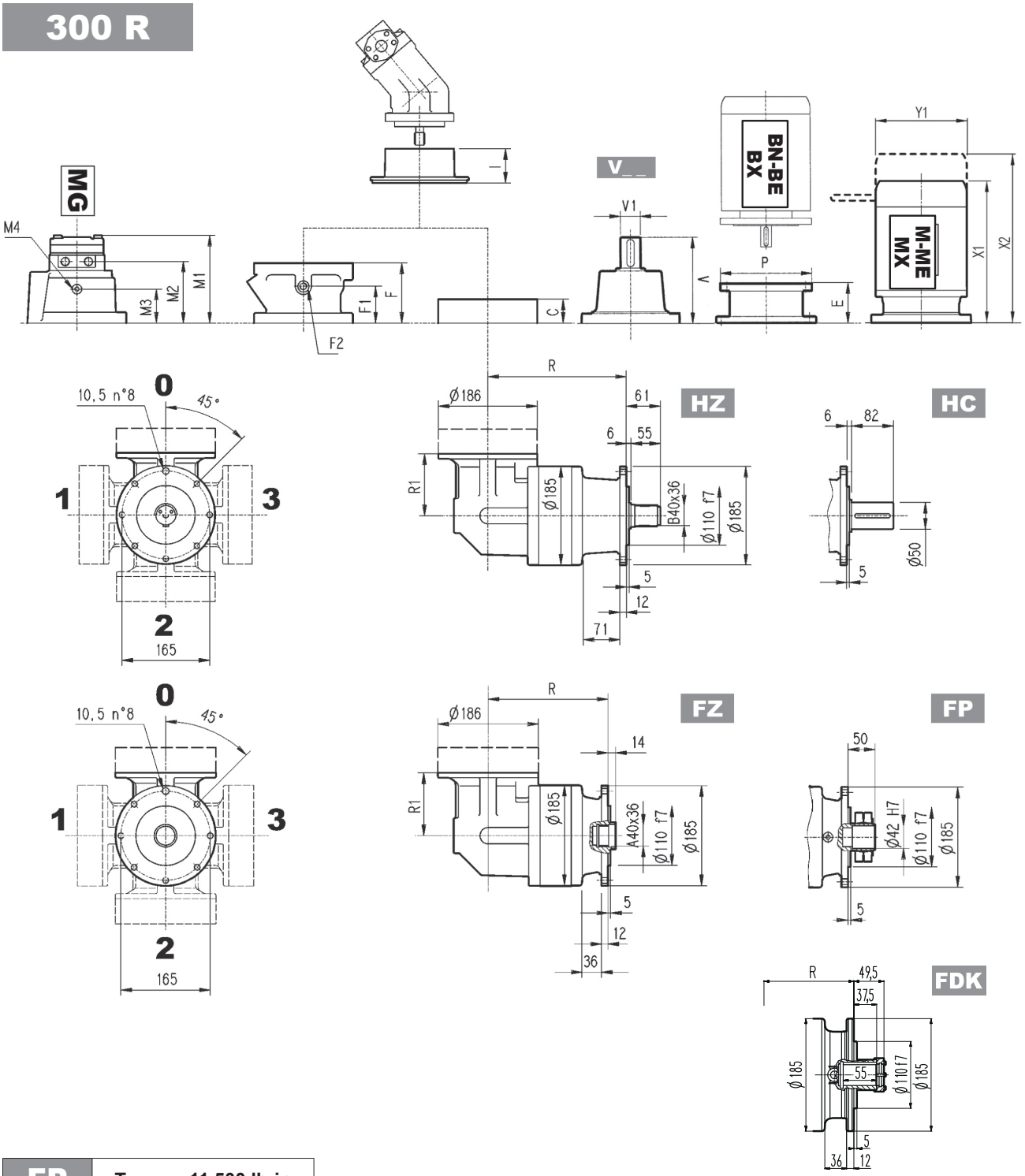

FP	T_{2max} = 11,500 lb•in

Dimensions are in mm

	P71		P80		P90		P100		P112		P132	
	E	P	E	P	E	P	E	P	E	P	E	P
300 R2	65	160	84	200	84	200	94	250	94	250	114	300
300 R3	65	160	84	200	84	200	94	250	94	250	114	300
300 R4	65	160	84	200	84	200	94	250	94	250	114	300

	S1 + M1			S2 + ME2S			S3 + ME3S			S3 + ME3L			S4 + ME4/MX4		
	X1	X2	Y1	X1	X2	Y1	X1	X2	Y1	X1	X2	Y1	X1	X2	Y1
300 R2	253	314	138	328	—	156	373	—	195	405	—	195	508	—	258
300 R3	253	314	138	328	—	156	373	—	195	405	—	195	—	—	—
300 R4	253	314	138	328	—	156	373	—	195	—	—	—	—	—	—

Bonfiglioli Riduttori

300 L

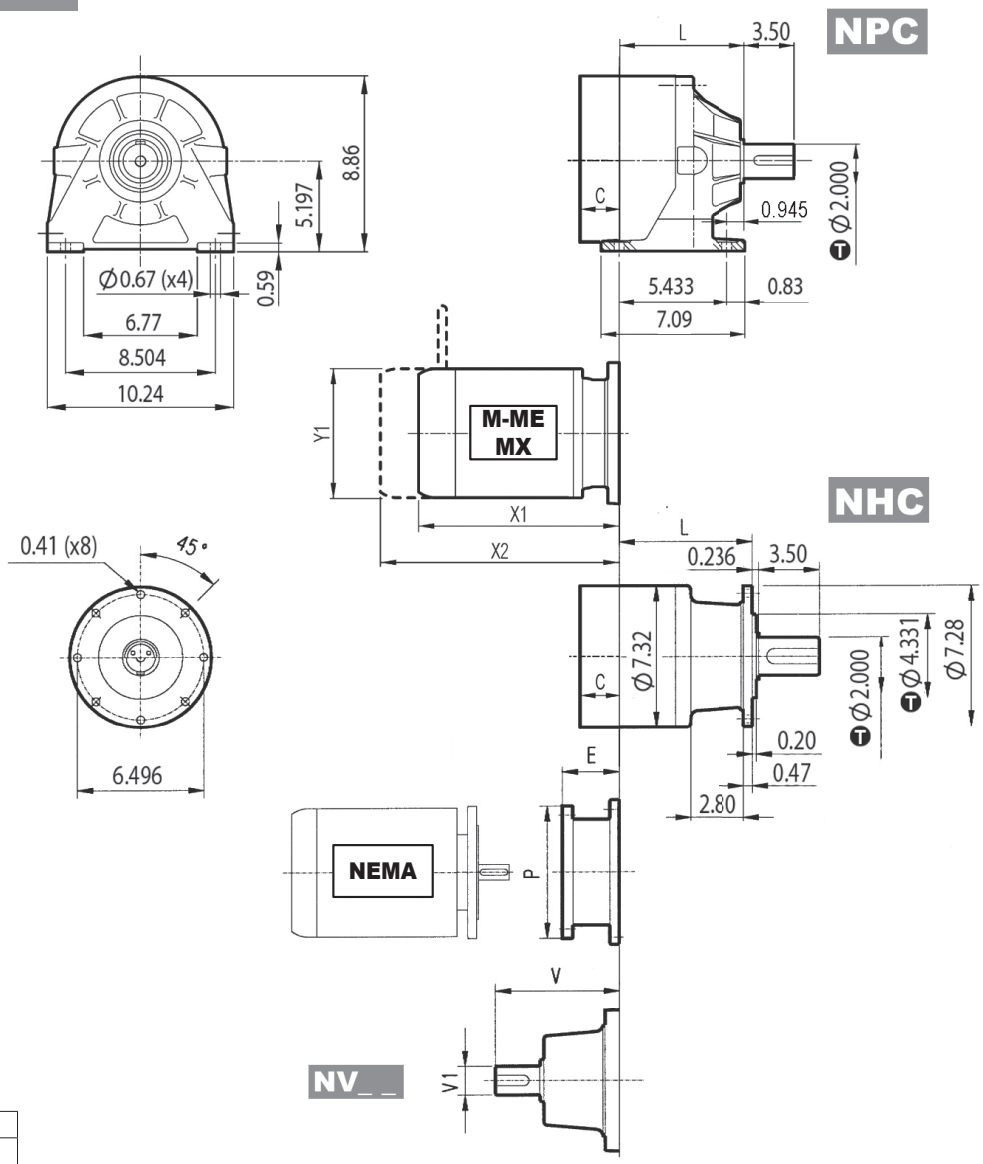

inch	T
4.331	-0.00142 -0.00280
2.000	0 -0.00075

Dimensions are in Inch except when shown in *italic [mm]*

	L		lbs	
	NPC	NHC	NPC	NHC
300 L1	4.77	4.53	50.7	44.1
300 L2	6.85	6.61	59.5	52.9
300 L3	8.94	8.70	68.4	61.7
300 L4	11.03	10.79	77.2	70.6

	V	V1	lbs	V	V1	lbs	C	Input
300 L1	5.996	1.125	13.2	6.437	1.625	15.4	1.457	A
300 L2	5.996	1.125	13.2	6.437	1.625	15.4	1.457	A
300 L3	5.996	1.125	13.2	6.437	1.625	15.4	1.457	A
300 L4	5.996	1.125	13.2	6.437	1.625	15.4	1.457	A

	N56C		N140TC		N180TC		N210TC		N250TC		N280TC	
	E	P	E	P	E	P	E	P	E	P	E	P
300 L1	4.51	6.70	4.51	6.70	5.22	8.82	5.22	8.82	5.22	8.82	6.12	11.81
300 L2	4.51	6.70	4.51	6.70	5.22	8.82	5.22	8.82	5.22	8.82	6.12	11.81
300 L3	4.51	6.70	4.51	6.70	5.22	8.82	5.22	8.82	5.22	8.82	6.12	11.81
300 L4	4.51	6.70	4.51	6.70	5.22	8.82	5.22	8.82	5.22	8.82	6.12	11.81

	S1 + M1			S2 + ME2S			S3 + ME3S			S3 + ME3L			S4 + ME4/MX4		
	X1	X2	Y1	X1	X2	Y1	X1	X2	Y1	X1	X2	Y1	X1	X2	Y1
300 L1	9.96	12.36	5.43	11.02	—	6.14	12.80	—	7.67	14.06	—	7.67	18.11	—	10.15
300 L2	9.96	12.36	5.43	11.02	—	6.14	12.80	—	7.67	14.06	—	7.67	18.11	—	10.15
300 L3	9.96	12.36	5.43	11.02	—	6.14	12.80	—	7.67	14.06	—	7.67	18.11	—	10.15
300 L4	9.96	12.36	5.43	11.02	—	6.14	12.80	—	7.67	14.06	—	7.67	18.11	—	10.15

300 R

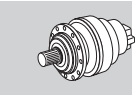

Imperial

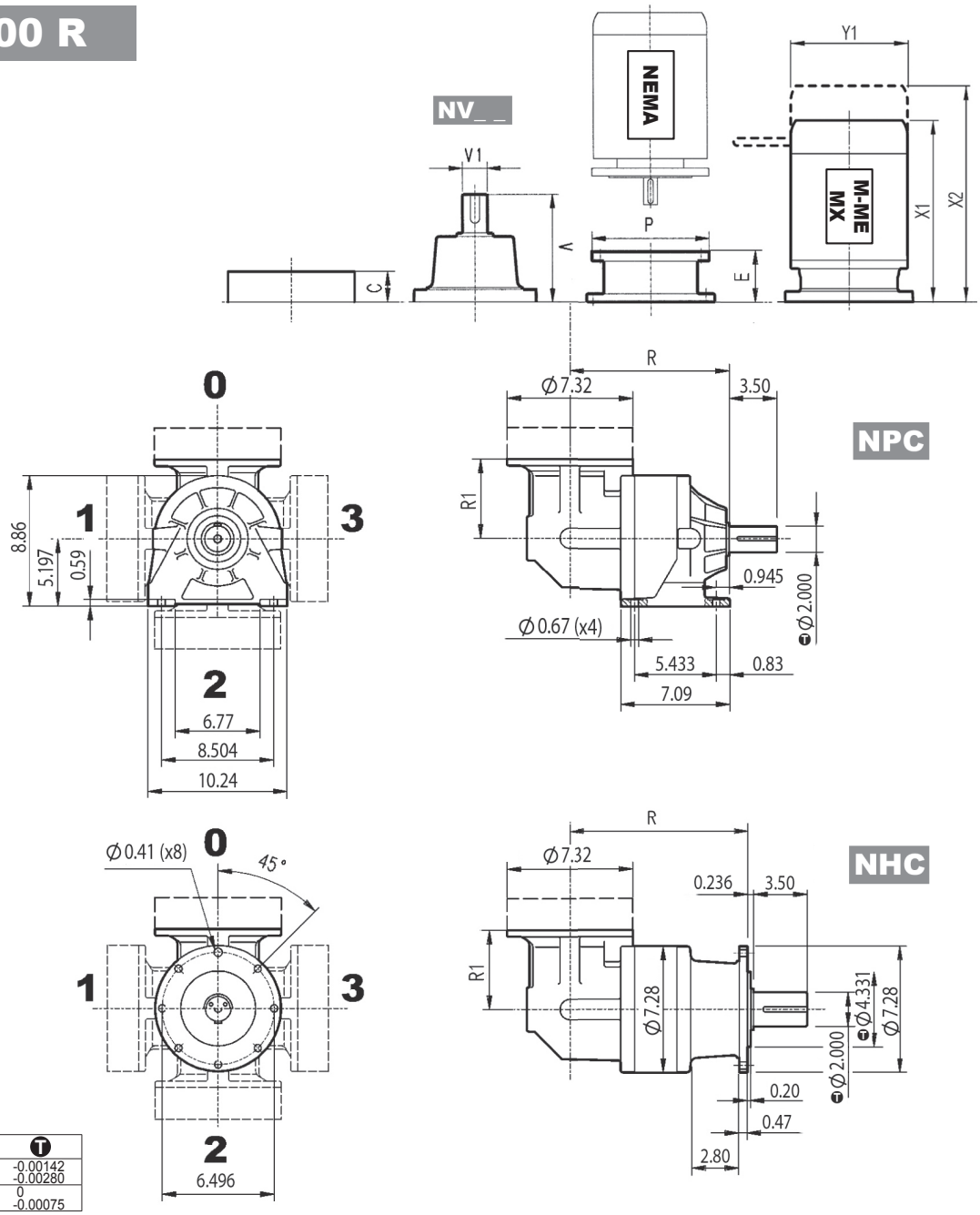

inch	T
4.331	-0.00142 -0.00280
2.000	0 -0.00075

Dimensions are in Inch except when shown in *italic [mm]*

	R		R1	lbs	
	NPC	NHC		NPC	NHC
300 R2	7.00	8.15	4.80	81.6	75.0
300 R3	9.09	10.24	4.80	90.4	83.8
300 R4	11.18	12.32	4.80	99.2	92.6

	V	V1	lbs	V	V1	lbs	C	Input
300 R2	5.996	1.125	13.2	6.437	1.625	15.4	1.457	A
300 R3	5.996	1.125	13.2	6.437	1.625	15.4	1.457	A
300 R4	5.996	1.125	13.2	6.437	1.625	15.4	1.457	A

	N56C		N140TC		N180TC		N210TC		N250TC		N280TC	
	E	P	E	P	E	P	E	P	E	P	E	P
300 R2	4.51	6.70	4.51	6.70	5.22	8.82	5.22	8.82	5.22	8.82	6.12	11.81
300 R3	4.51	6.70	4.51	6.70	5.22	8.82	5.22	8.82	5.22	8.82	6.12	11.81
300 R4	4.51	6.70	4.51	6.70	5.22	8.82	5.22	8.82	5.22	8.82	6.12	11.81

	S1 + M1			S2 + ME2S			S3 + ME3S			S3 + ME3L			S4 + ME4/MX4		
	X1	X2	Y1	X1	X2	Y1	X1	X2	Y1	X1	X2	Y1	X1	X2	Y1
300 R2	9.96	12.36	5.43	12.91	—	6.14	14.69	—	7.67	15.94	—	7.67	20	—	10.15
300 R3	9.96	12.36	5.43	12.91	—	6.14	14.69	—	7.67	15.94	—	7.67	—	—	—
300 R4	9.96	12.36	5.43	12.91	—	6.14	14.69	—	7.67	—	—	—	—	—	—

3/V 00 L3

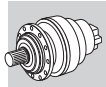

Metric

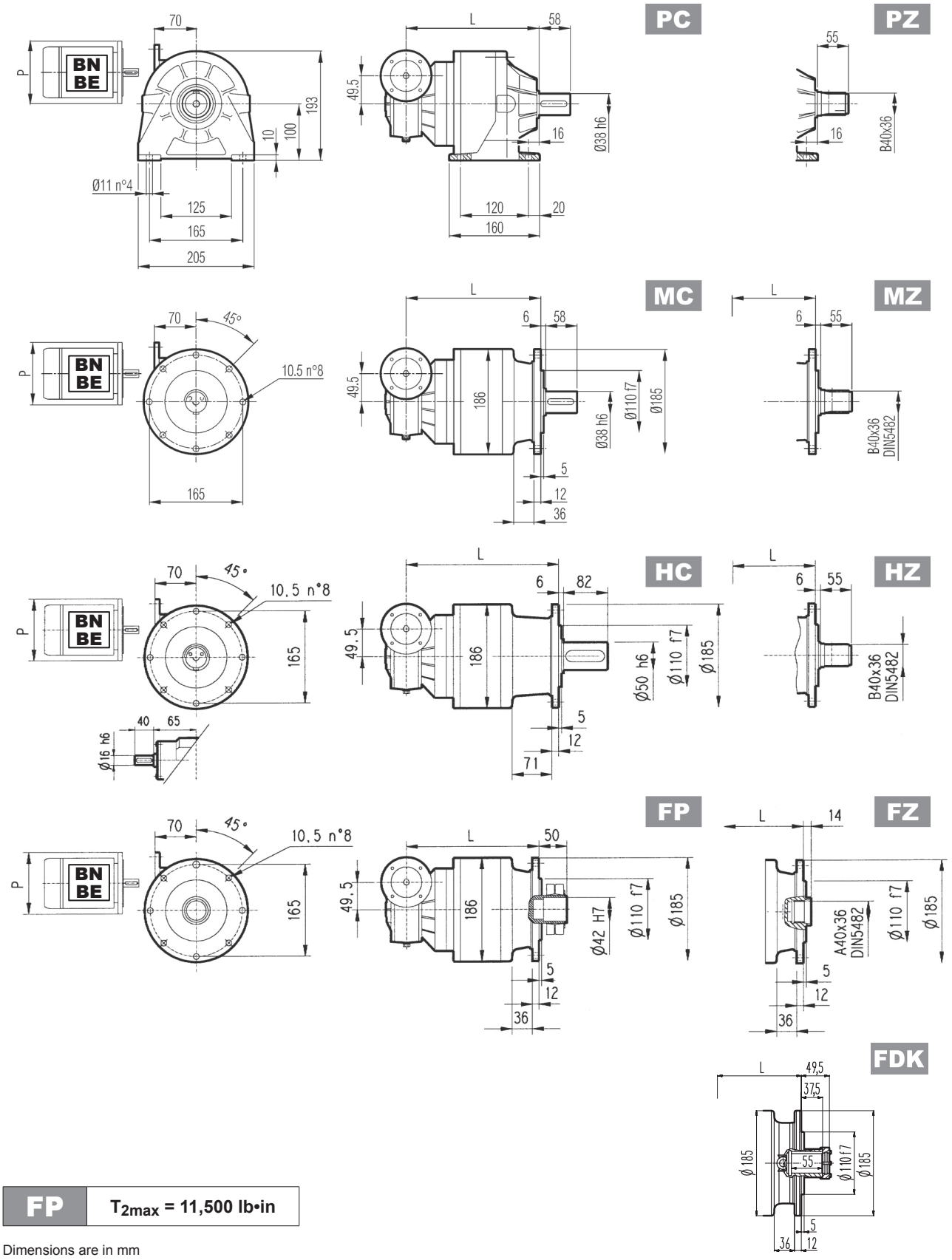

FP	T_{2max} = 11,500 lb•in

Dimensions are in mm

	L				Kg				P63	P71	P80
	MC - MZ	PC - PZ	HC - HZ	FP - FZ - FDK	MC - MZ	PC - PZ	HC - HZ	FP - FZ - FDK	P	P	P
3/V 00 L3	255	261	290	255	25	30	27	23	140	160	200

3/V 00 L3

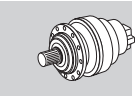

Imperial

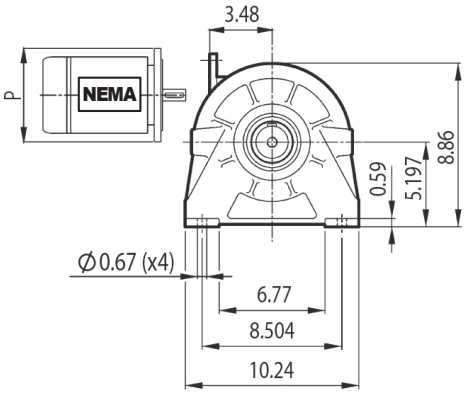

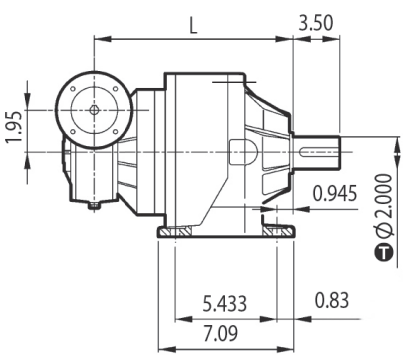

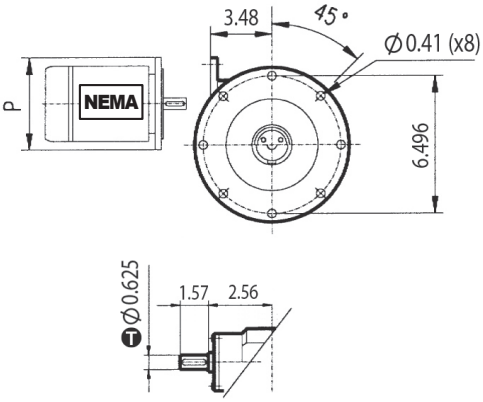

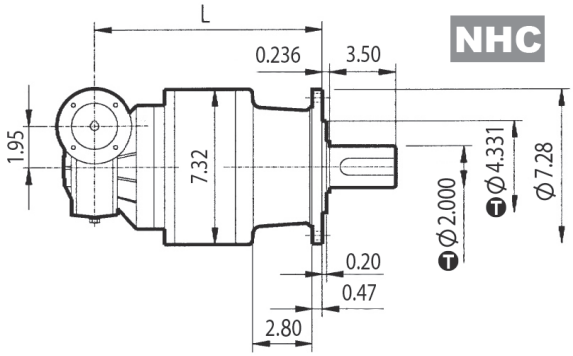

inch	T
4.331	-0.00142 -0.00280
2.000	0 -0.00075
0.625	0 -0.00043

Dimensions are in Inch except when shown in *italic [mm]*

	L		lbs		N56C
	NPC - PZ	NHC - HZ	NPC	NHC	P
3/V 00 L3	10.27	11.42	66.2	59.5	6.54

Bonfiglioli Riduttori

3/A 00 L2

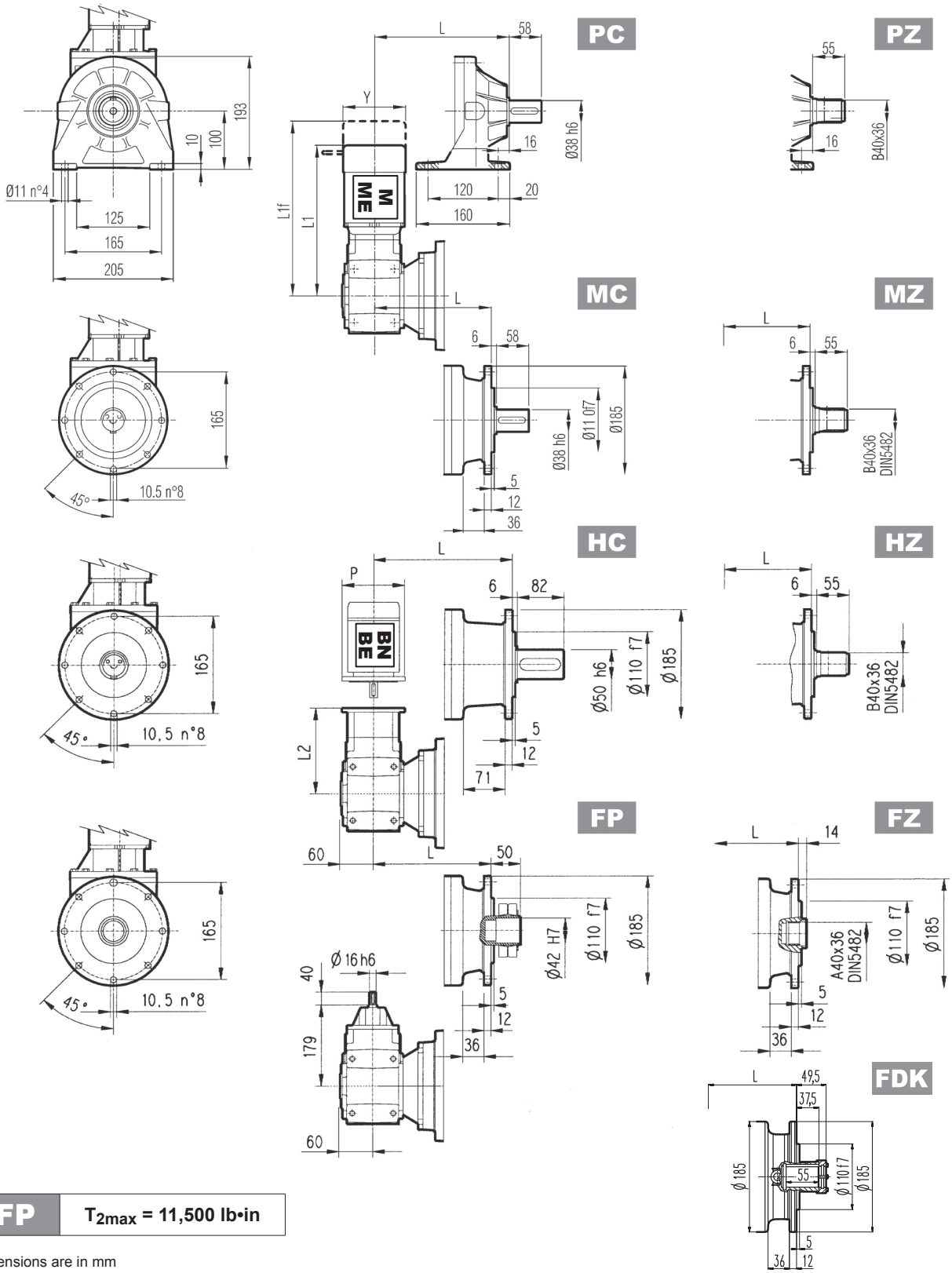

FP	T_{2max} = 11,500 lb•in

Dimensions are in mm

	L				Kg			
	MC - MZ	PC - PZ	HC - HZ	FP - FZ - FDK	MC - MZ	PC - PZ	HC - HZ	FP - FZ - FDK
3/A 00 L2	193	199	228	193	38	43	40	36

	P63		P71		P80		P90		P100		S1 + M1			S2 + ME2S			S3 + ME3S			S3 + ME3L		
	L2	P	L2	P	L2	P	L2	P	L2	P	L1	L1f	Y	L1	L1f	Y	L1	L1f	Y	L1	L1f	Y
3/A 00 L2	212.5	140	212.5	160	232	200	232	200	242	250	368	428	138	394	—	156	439	—	195	470	—	195

3/A 00 L2

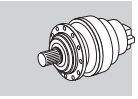

Imperial

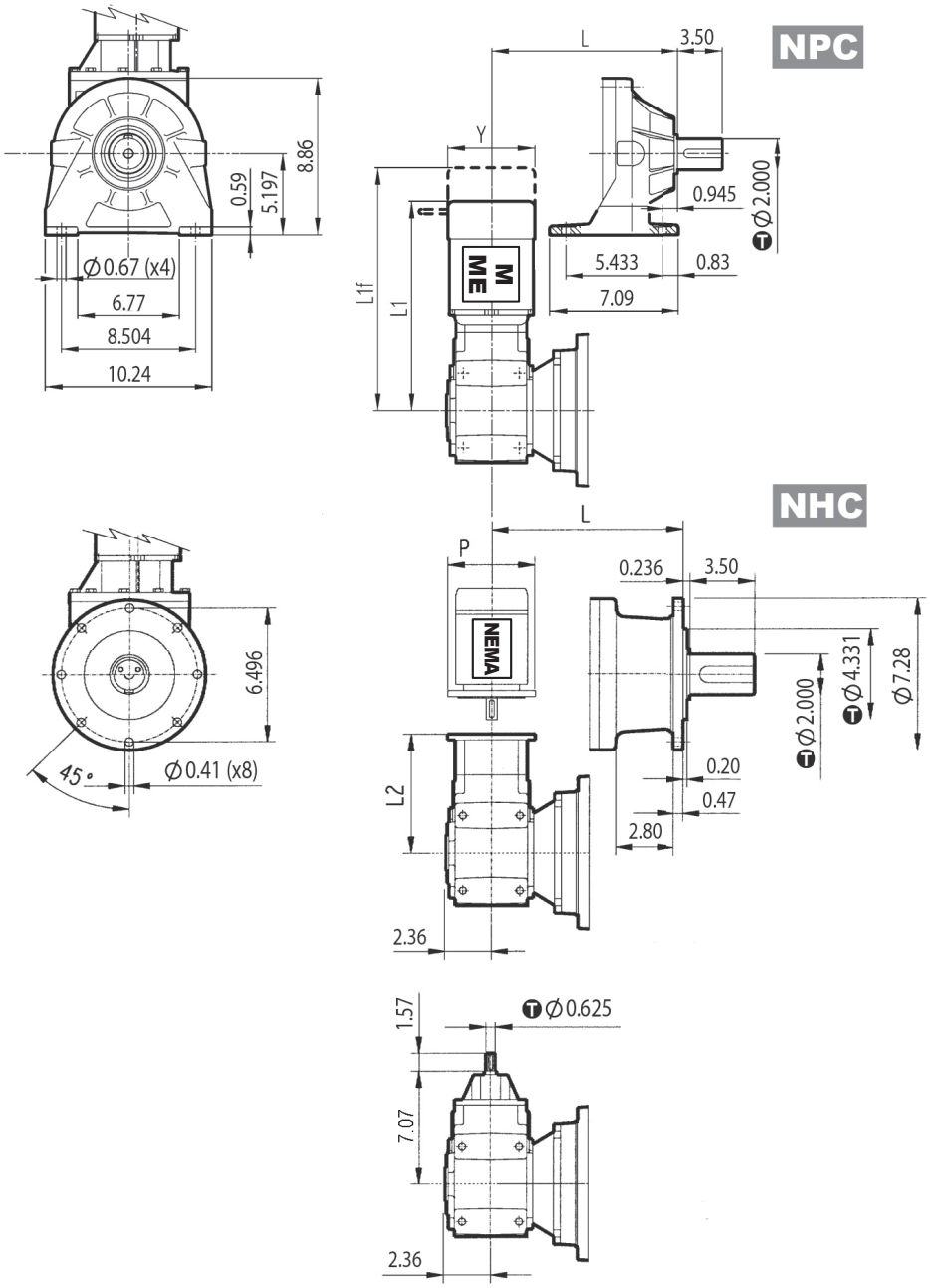

inch	T
4.331	-0.00142 / -0.00280
2.000	0 / -0.00075
0.625	0 / -0.00043

Dimensions are in Inch except when shown in *italic [mm]*

	L		lbs	
	NPC	NHC	NPC	NHC
3/A 00 L2	7.83	8.98	94.8	88.2

	N56C		N140TC		N180TC		S1 + M1			S2 + ME2S			S3 + ME3S			S3 + ME3L		
	L2	P	L2	P	L2	P	L1	L1f	Y	L1	L1f	Y	L1	L1f	Y	L1	L1f	Y
3/A 00 L2	9.15	6.50	9.15	6.50	9.90	9.00	14.49	16.85	5.43	15.51	—	6.14	17.28	—	7.68	18.50	—	7.68

Bonfiglioli Riduttori

300 L | 300 R | 3/V 00 L3 | 3/A 00 L2

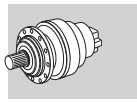

Metric

Imperial

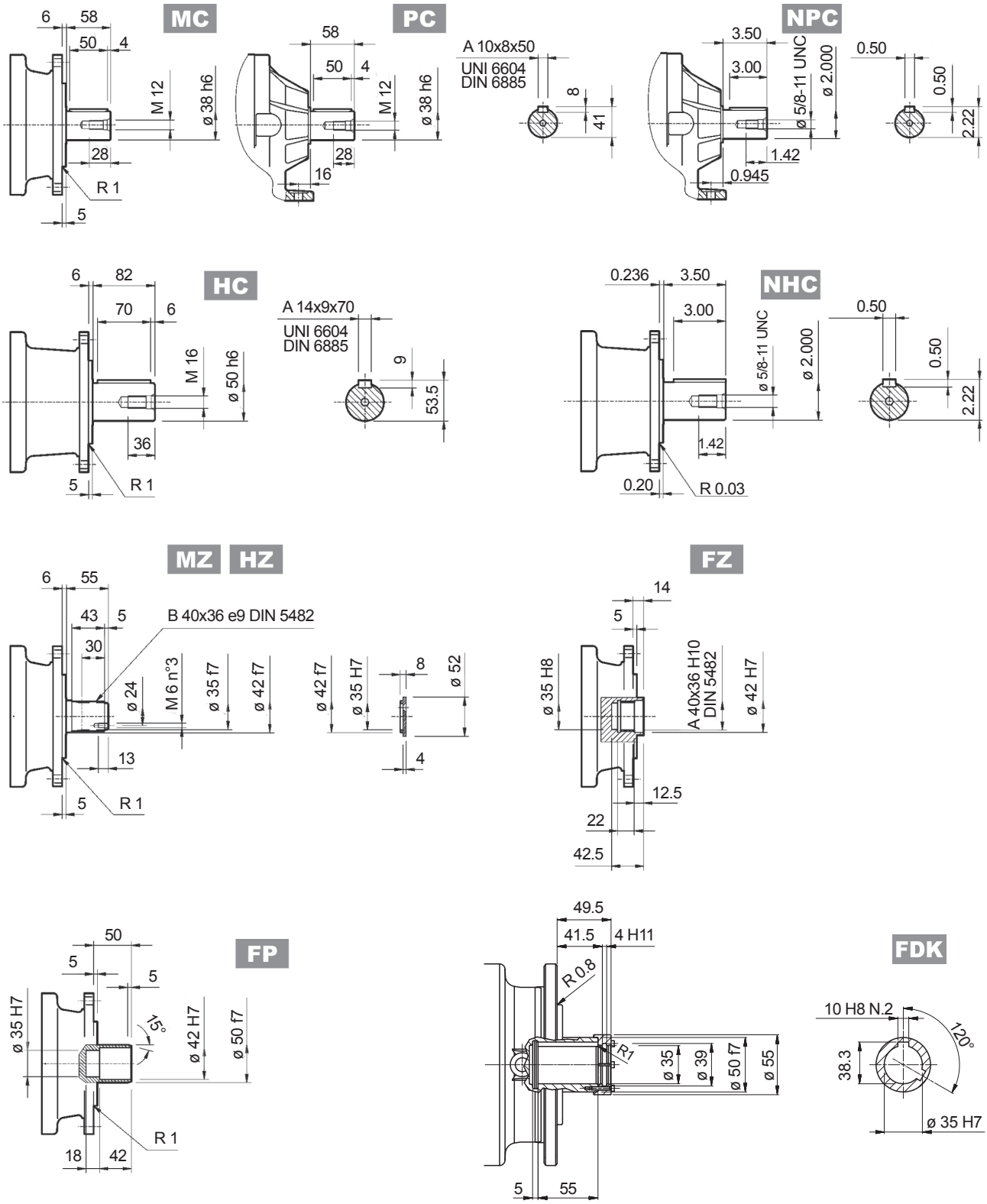

FP	T_{2max} = 11,500 lb•in

Dimensions are in mm when shown in italic, otherwise dimensions are in inches

inch	T
2.000	0 / -0.00075

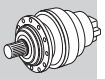

Flange

W0A

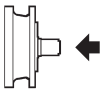

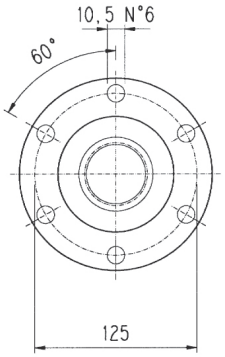

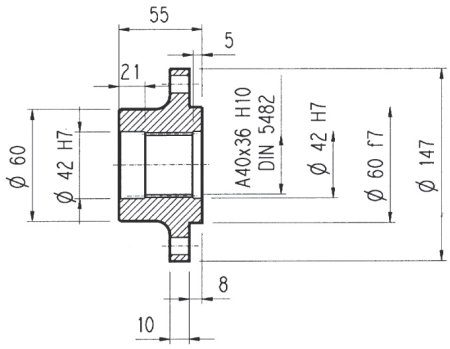

Material: Steel C40

Dimensions are in mm

Pinions

P...

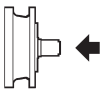

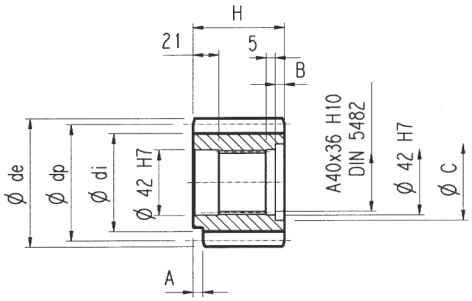

α = 20°

Dimensions are in mm

	m	z	x	dp	di	de	H	A	B	C	Material
PBE	4.5	14	0.507	63	56	75.5	55	—	—	—	Steel 39NiCrMo3 hardened and tempered
PCE	5	14	0.500	70	62.5	84.8	65	—	10	53	
PDC	6	12	0.250	72	61	84.8	59	14	4	54	
PDE	6	14	0.500	84	73	99.6	65	—	10	54	

Sleeve coupling

M0A

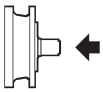

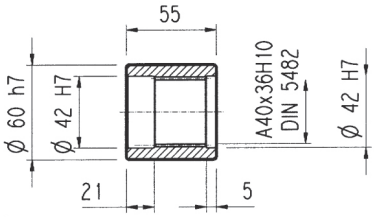

Material: Steel 16CrNi4

Dimensions are in mm

Splined bars

B0A

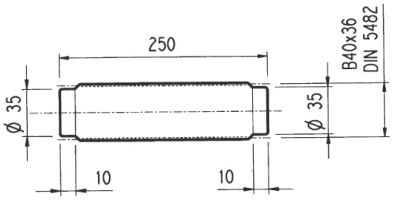

Material: Case hardening steel 18NiCrMo5 UNI 5331
must be case hardened 50-55 HRC

Shrink disc

G0A

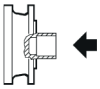

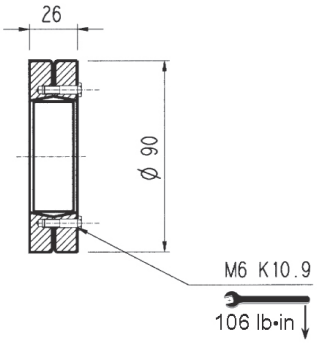

Dimensions are in mm

300 L 300 R

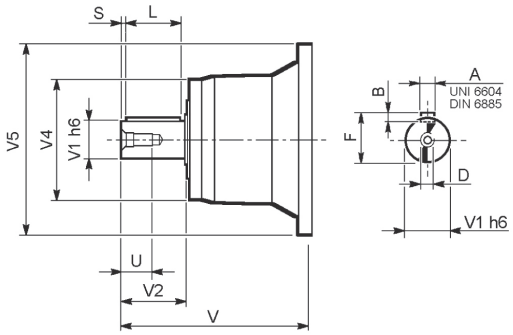

Dimensions are in mm

		V	V1	V2	V4	V5	A	B	F	L	S	D	U
300 L1	**V01A**	137.5	24	36	120	186	8	7	27	30	3	M8	19
	V01B	158	38	58	120	186	10	8	41	50	4	M12	28
300 L2	**V01A**	137.5	24	36	120	186	8	7	27	30	3	M8	19
	V01B	158	38	58	120	186	10	8	41	50	4	M12	28
300 L3	**V01A**	137.5	24	36	120	186	8	7	27	30	3	M8	19
	V01B	158	38	58	120	186	10	8	41	50	4	M12	28
300 L4	**V01A**	137.5	24	36	120	186	8	7	27	30	3	M8	19
	V01B	158	38	58	120	186	10	8	41	50	4	M12	28
300 R2-R3-R4	**V01A**	137.5	24	36	120	186	8	7	27	30	3	M8	19
	V01B	158	38	58	120	186	10	8	41	50	4	M12	28

300 L 300 R

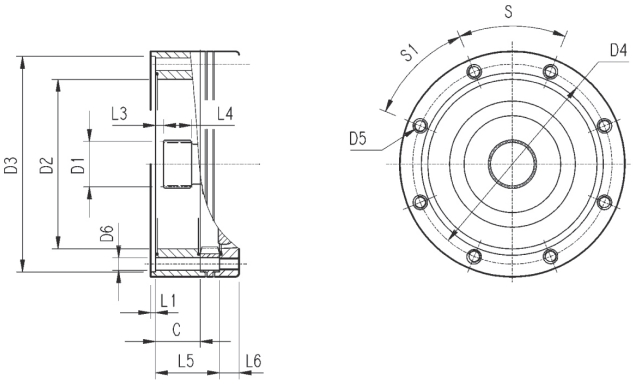

Dimensions are in mm

		C	D1	D2	D3	D4	D5	D6	L1	L2	L3	L4	L5	L6	S	S1	Input
300 L1	**V9AA**	37	40x36 DIN5482	140	178 H7	165	M10 n°8	11	4	—	9	18	53	18	45°	45°	A
300 L2	**V9AA**	37	40x36 DIN5482	140	178 H7	165	M10 n°8	11	4	—	9	18	106	18	45°	45°	A
300 L3	**V9AA**	37	40x36 DIN5482	140	178 H7	165	M10 n°8	11	4	—	9	18	159	18	45°	45°	A
300 L4	**V9AA**	37	40x36 DIN5482	140	178 H7	165	M10 n°8	11	4	—	9	18	212	18	45°	45°	A
300 R2-R3-R4	**V9AA**	37	40x36 DIN5482	140	178 H7	165	M10 n°8	11	4	—	9	18	37	18	45°	45°	A

3/V 00 L3

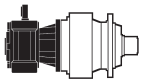

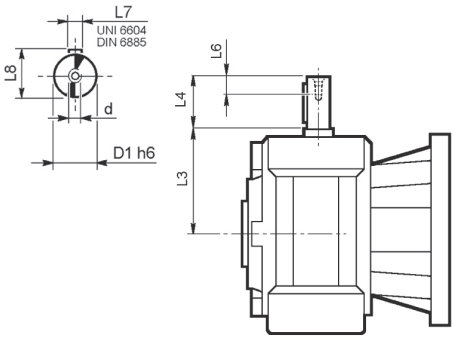

Dimensions are in mm

	D1 h6	L3	L4	L6	L7	L8	d
3/V 00 L3_HS	16	65	40	16	5	18	M6

3/A 00 L2

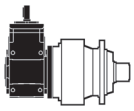

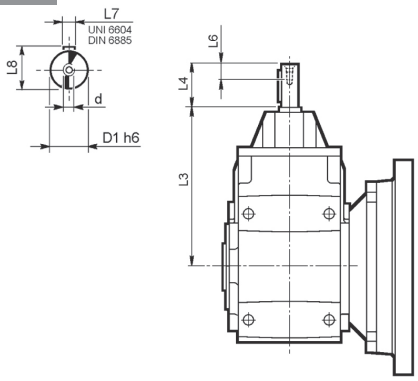

Dimensions are in mm

	D1 h6	L3	L4	L6	L7	L8	d
3/A 00 L2_HS	16	179	40	16	5	18	M6

300 L 300 R

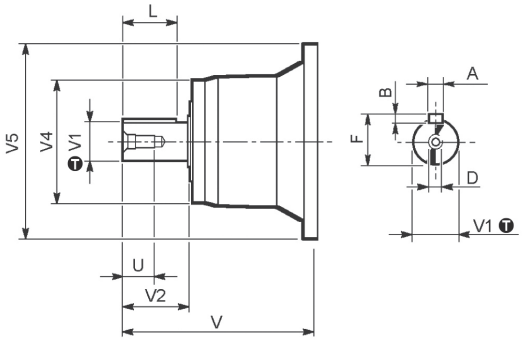

inch	T
1.125	0 -0.00051
1.625	0 -0.00053

Dimensions are in Inch except when shown in *italic [mm]*

		V	V1	V2	V4	V5	A	B	F	L	D	U
300 L1	**NV01A**	5.996	1.125	2.000	4.980	7.323	0.250	0.250	1.236	1.752	3/8-16 UNC	0.866
	NV01B	6.437	1.625	2.500	4.980	7.323	0.375	0.375	1.791	2.000	1/2-13 UNC	1.102
300 L2	**NV01A**	5.996	1.125	2.000	4.980	7.323	0.250	0.250	1.236	1.752	3/8-16 UNC	0.866
	NV01B	6.437	1.625	2.500	4.980	7.323	0.375	0.375	1.791	2.000	1/2-13 UNC	1.102
300 L3	**NV01A**	5.996	1.125	2.000	4.980	7.323	0.250	0.250	1.236	1.752	3/8-16 UNC	0.866
	NV01B	6.437	1.625	2.500	4.980	7.323	0.375	0.375	1.791	2.000	1/2-13 UNC	1.102
300 L4	**NV01A**	5.996	1.125	2.000	4.980	7.323	0.250	0.250	1.236	1.752	3/8-16 UNC	0.866
	NV01B	6.437	1.625	2.500	4.980	7.323	0.375	0.375	1.791	2.000	1/2-13 UNC	1.102
300 R2-R3-R4	**NV01A**	5.996	1.125	2.000	4.980	7.323	0.250	0.250	1.236	1.752	3/8-16 UNC	0.866
	NV01B	6.437	1.625	2.500	4.980	7.323	0.375	0.375	1.791	2.000	1/2-13 UNC	1.102

300 L 300 R

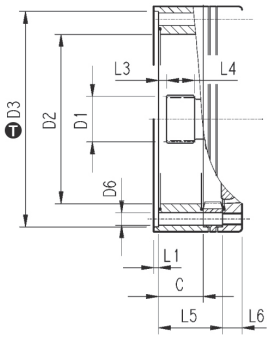

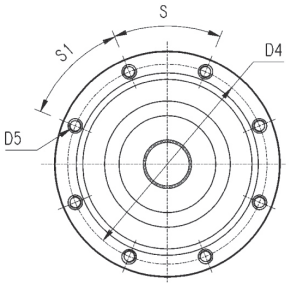

inch	T
7.01	+0.00157 0

Dimensions are in Inch except when shown in *italic [mm]*

		C	D1	D2	D3	D4	D5	D6	L1	L2	L3	L4	L5	L6	S	S1	Input
300 L1	**V9AA**	1.46	*40x36 DIN5482*	5.51	7.01	5.51	*M10 n°8*	0.43	0.16	—	0.35	0.71	2.09	0.71	45°	45°	A
300 L2	**V9AA**	1.46	*40x36 DIN5482*	5.51	7.01	5.51	*M10 n°8*	0.43	0.16	—	0.35	0.71	4.17	0.71	45°	45°	A
300 L3	**V9AA**	1.46	*40x36 DIN5482*	5.51	7.01	5.51	*M10 n°8*	0.43	0.16	—	0.35	0.71	6.26	0.71	45°	45°	A
300 L4	**V9AA**	1.46	*40x36 DIN5482*	5.51	7.01	5.51	*M10 n°8*	0.43	0.16	—	0.35	0.71	8.35	0.71	45°	45°	A
300 R2-R3-R4	**V9AA**	1.46	*40x36 DIN5482*	5.51	7.01	5.51	*M10 n°8*	0.43	0.16	—	0.35	0.71	1.46	0.71	45°	45°	A

3/V 00 L3

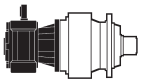

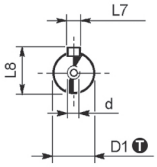

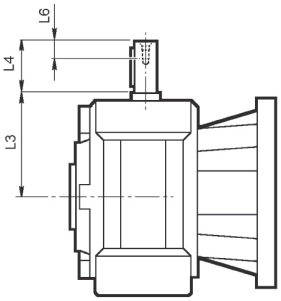

inch	T
0.625	0 -0.00043

Dimensions are in Inch except when shown in *italic [mm]*

	D1	L3	L4	L6	L7	L8	d
3/V 00 L3_NHS	0.625	2.57	1.575	0.63	0.188	0.705	1/4-20UNC

3/A 00 L2

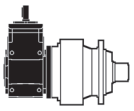

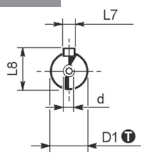

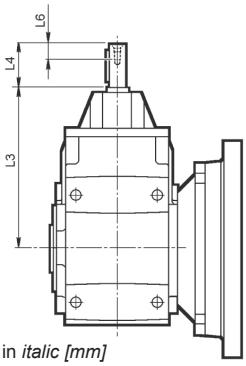

inch	T
0.625	0 -0.00043

Dimensions are in Inch except when shown in *italic [mm]*

	D1	L3	L4	L6	L7	L8	d
3/A 00 L2_NHS	0.625	7.07	1.575	0.63	0.188	0.705	1/4-20UNC

Permissible radial and axial loads on output shaft with $Fh_2 : n_2 \cdot h = 100000$

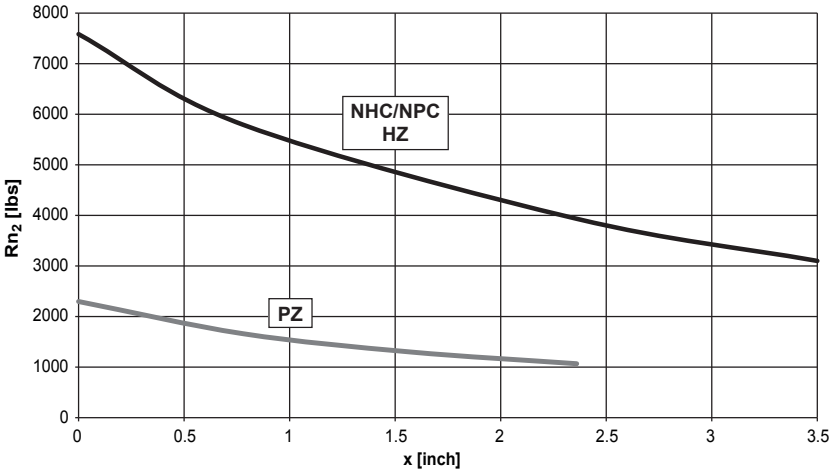

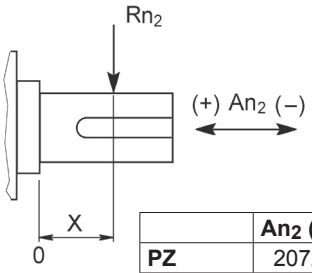

	An_2 (+)	An_2 (-)
PZ	2072	1554
NPC NHC - HZ	4504	4504

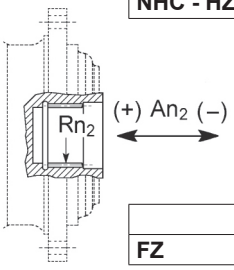

	Rn_2	An_2 (+/-)
FZ	836	836

Load corrective factor fh_2 on shafts	$Fh_2 = n_2 \cdot h$		10000	25000	50000	100000	500000	1000000
	fh_2	**FZ**	**2.15**	**1.59**	**1.26**	**1.00**	**0.58**	**0.46**
		PZ	**2.15**	**1.59**	**1.26**	**1.00**	**0.58**	**0.46**
		NHC - NPC - HZ	**1.27**	**1.27**	**1.26**	**1.00**	**0.62**	**0.50**

Permissible radial loads on input shaft with $Fh_1 : n_1 \cdot h = 250000$

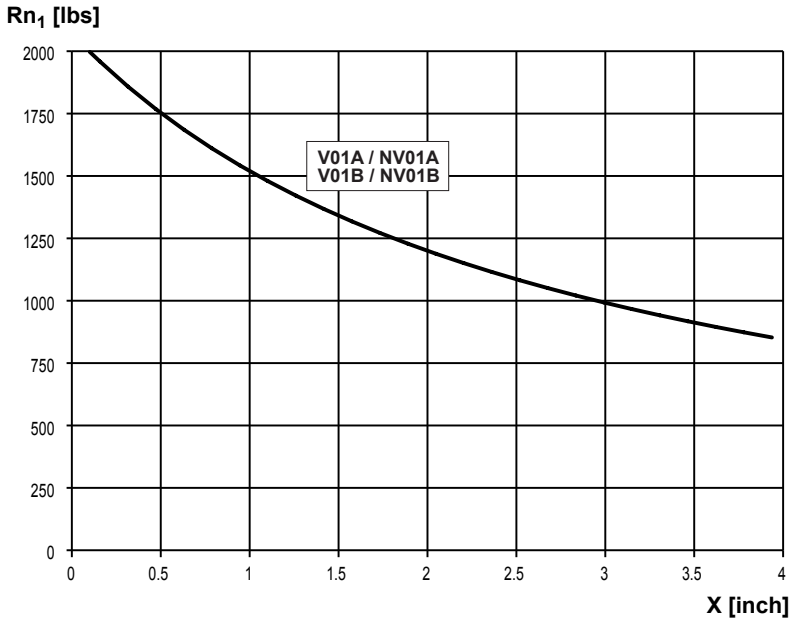

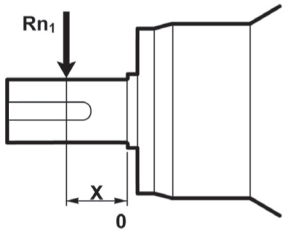

Load corrective factor fh_1 on shafts	$Fh_1 = n_1 \cdot h$	250000	500000	1000000	2000000	5000000	10000000
	fh_1	**1**	**0.79**	**0.63**	**0.50**	**0.37**	**0.29**

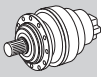

301 L

	Hydraulic motor										
	MG							542			Kg
cm³	050	080	100	125	160	200	250				
	M1							M2	M3	M4	
301 L1	—	167	171	175	181	188	197	113	60	1/4G	14
301 L2	162	167	171	175	181	—	—	113	60	1/4G	14

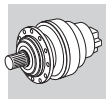

Metric

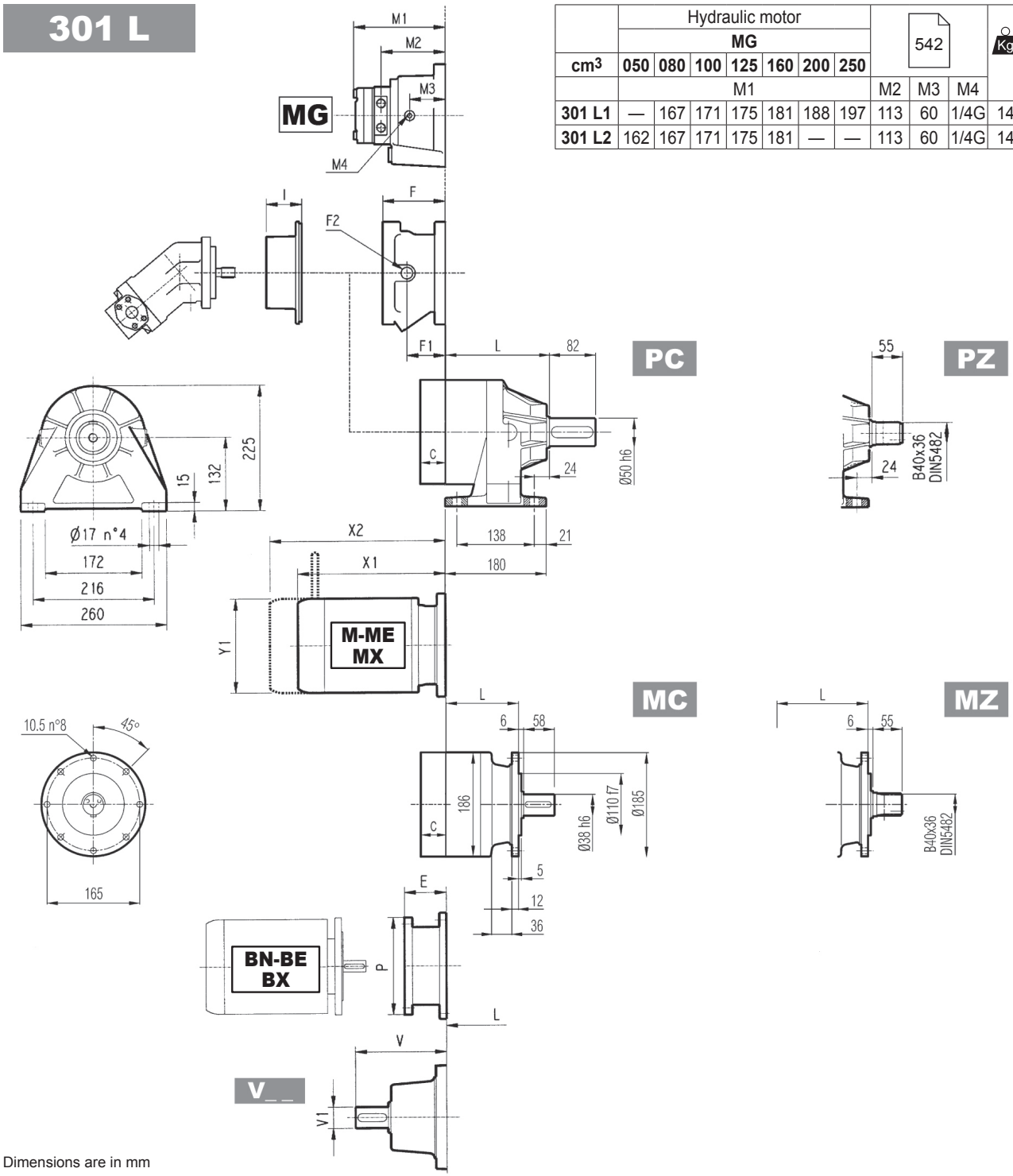

Dimensions are in mm

	L				Kg			
	MC - MZ	PC - PZ	HC - HZ	FP - FZ - FDK	MC - MZ	PC - PZ	HC - HZ	FP - FZ - FDK
301 L1	92	132	126	92	21	26	23	19
301 L2	145	185	176	145	25	30	27	23
301 L3	198	238	232	198	29	34	31	27
301 L4	251	291	285	251	33	38	35	31

	V	V1	Kg	V	V1	Kg	C	Input	I	F	F1	F2	Type	Input	Kg
301 L1	137.5	24	6	158	38	7	37	A	532	105	65	1/4 G	4	A	10
301 L2	137.5	24	6	158	38	7	37	A		105	65	1/4 G	4	A	10
301 L3	137.5	24	6	158	38	7	37	A		105	65	1/4 G	4	A	10
301 L4	137.5	24	6	158	38	7	37	A		105	65	1/4 G	4	A	10

301 L

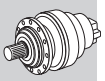

Metric

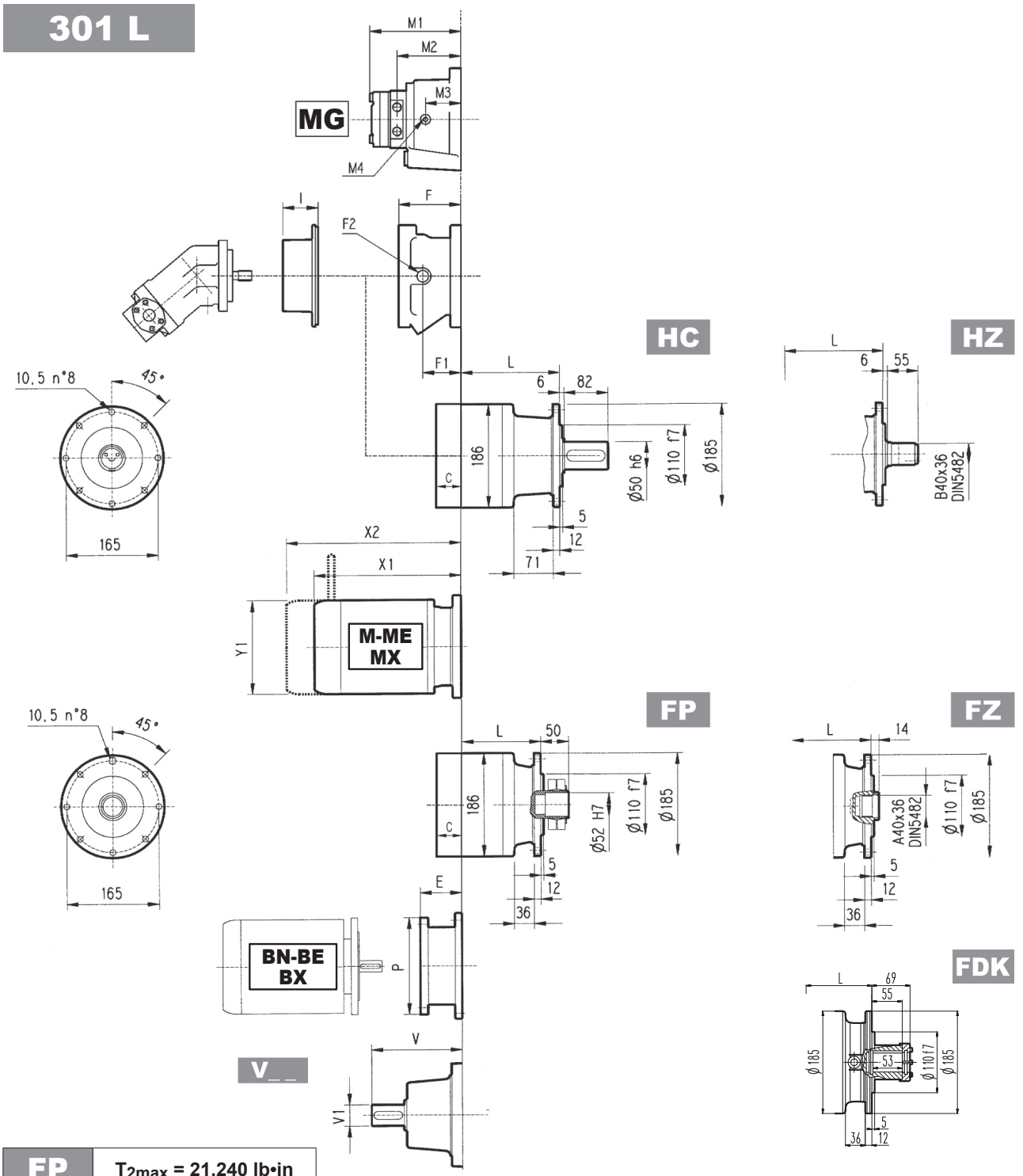

FP | T_{2max} = 21,240 lb•in

Dimensions are in mm

	P71		P80		P90		P100		P112		P132	
	E	P	E	P	E	P	E	P	E	P	E	P
301 L1	65	160	84	200	84	200	94	250	94	250	114	300
301 L2	65	160	84	200	84	200	94	250	94	250	114	300
301 L3	65	160	84	200	84	200	94	250	94	250	114	300
301 L4	65	160	84	200	84	200	94	250	94	250	114	300

	S1 + M1			S2 + ME2S			S3 + ME3S			S3 + ME3L			S4 + ME4/MX4		
	X1	X2	Y1	X1	X2	Y1	X1	X2	Y1	X1	X2	Y1	X1	X2	Y1
301 L1	253	314	138	280	—	156	325	—	195	357	—	195	460	—	258
301 L2	253	314	138	280	—	156	325	—	195	357	—	195	460	—	258
301 L3	253	314	138	280	—	156	325	—	195	357	—	195	460	—	258
301 L4	253	314	138	280	—	156	325	—	195	357	—	195	460	—	258

Bonfiglioli Riduttori

301 R

	Hydraulic motor										Kg
	MG							542			
cm3	050	080	100	125	160	200	250				
	M1							M2	M3	M4	
301 R2	162	167	171	175	181	—	—	113	60	1/4G	14

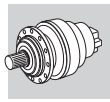

Metric

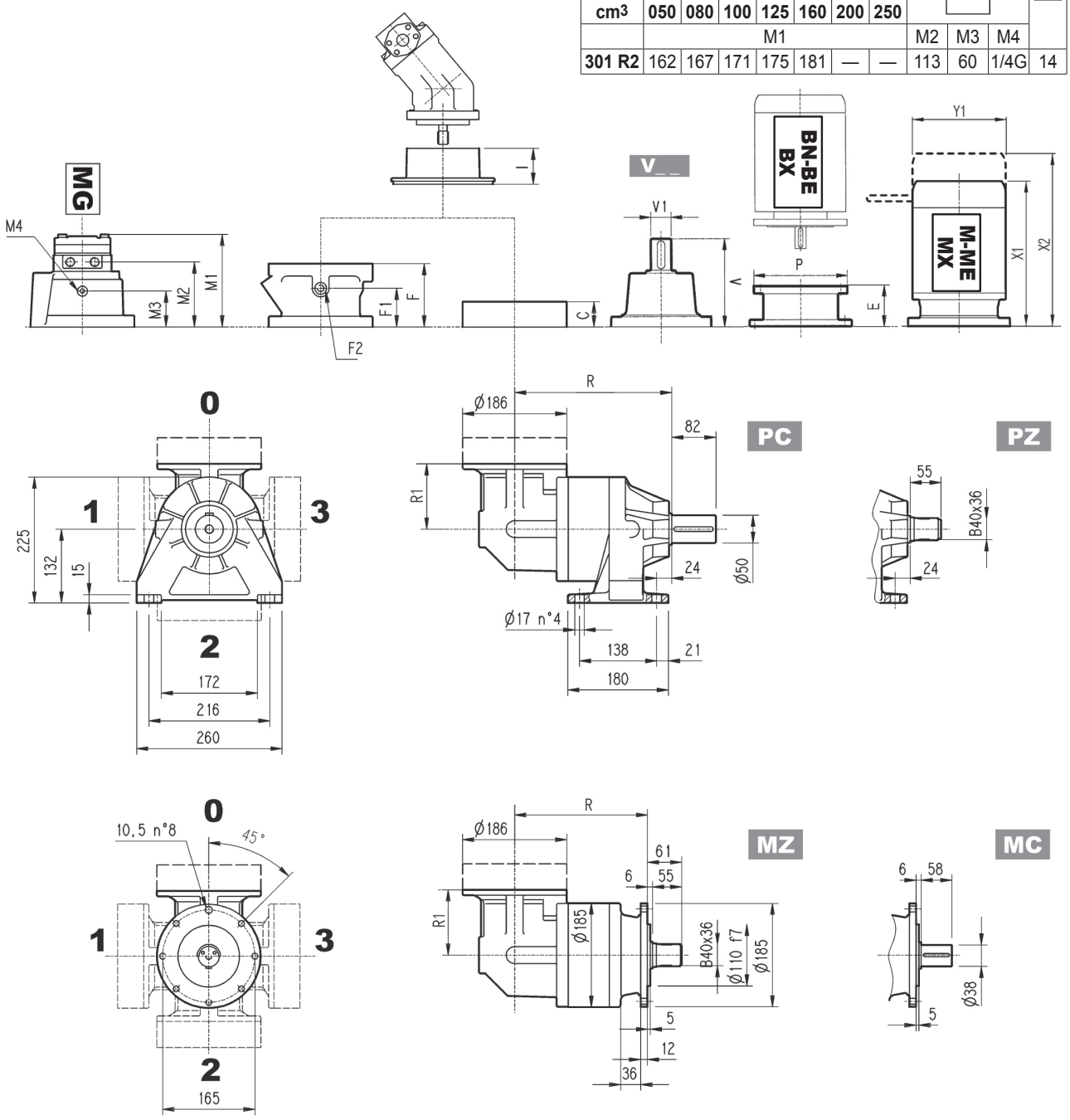

Dimensions are in mm

	R				R1	Kg			
	MC - MZ	PC - PZ	HC - HZ	FP - FZ - FDK		MC - MZ	PC - PZ	HC - HZ	FP - FZ - FDK
301 R2	184	225	219	184	122	35	42	37	33
301 R3	237	278	272	237	122	39	46	41	37
301 R4	290	331	325	290	122	43	50	45	41

	V	V1	Kg	V	V1	Kg	C	Input	I	F	F1	F2	Type	Input	Kg
301 R2	137.5	24	6	158	38	7	37	A		105	65	1/4 G	4	A	10
301 R3	137.5	24	6	158	38	7	37	A		105	65	1/4 G	4	A	10
301 R4	137.5	24	6	158	38	7	37	A	532	105	65	1/4 G	4	A	10

301 R

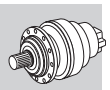

Metric

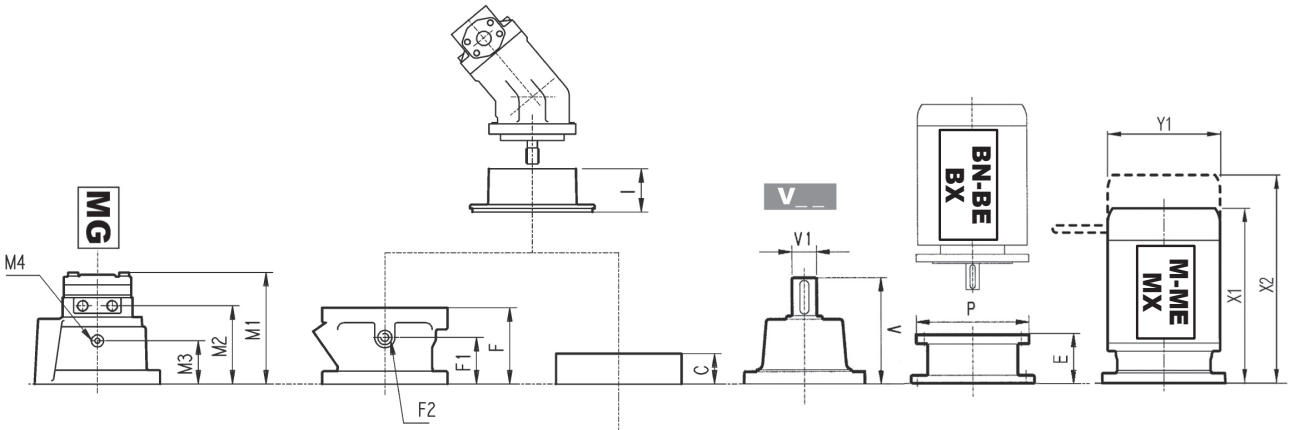

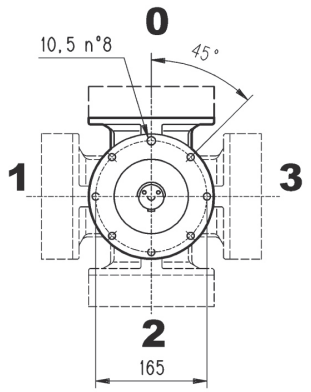

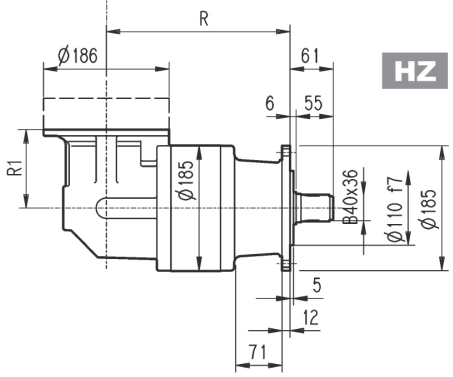

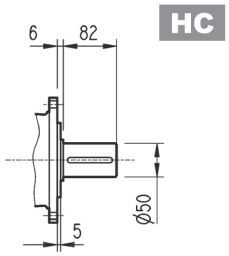

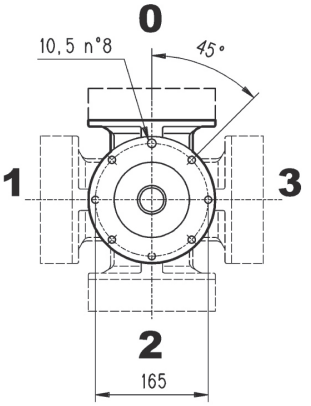

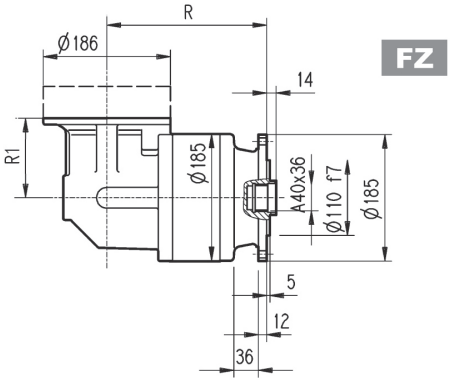

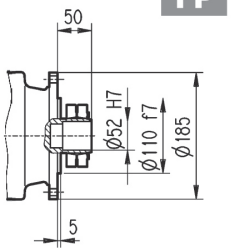

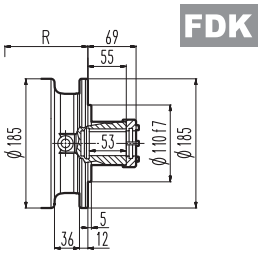

FP	T_{2max} = 21,240 lb•in

Dimensions are in mm

	P71		P80		P90		P100		P112		P132	
	E	P	E	P	E	P	E	P	E	P	E	P
301 R2	65	160	84	200	84	200	94	250	94	250	114	300
301 R3	65	160	84	200	84	200	94	250	94	250	114	300
301 R4	65	160	84	200	84	200	94	250	94	250	114	300

	S1 + M1			S2 + ME2S			S3 + ME3S			S3 + ME3L			S4 + ME4/MX4		
	X1	X2	Y1	X1	X2	Y1	X1	X2	Y1	X1	X2	Y1	X1	X2	Y1
301 R2	253	314	138	328	—	156	373	—	195	405	—	195	508	—	258
301 R3	253	314	138	328	—	156	373	—	195	405	—	195	—	—	—
301 R4	253	314	138	328	—	156	373	—	195	—	—	—	—	—	—

Bonfiglioli Riduttori

301 L

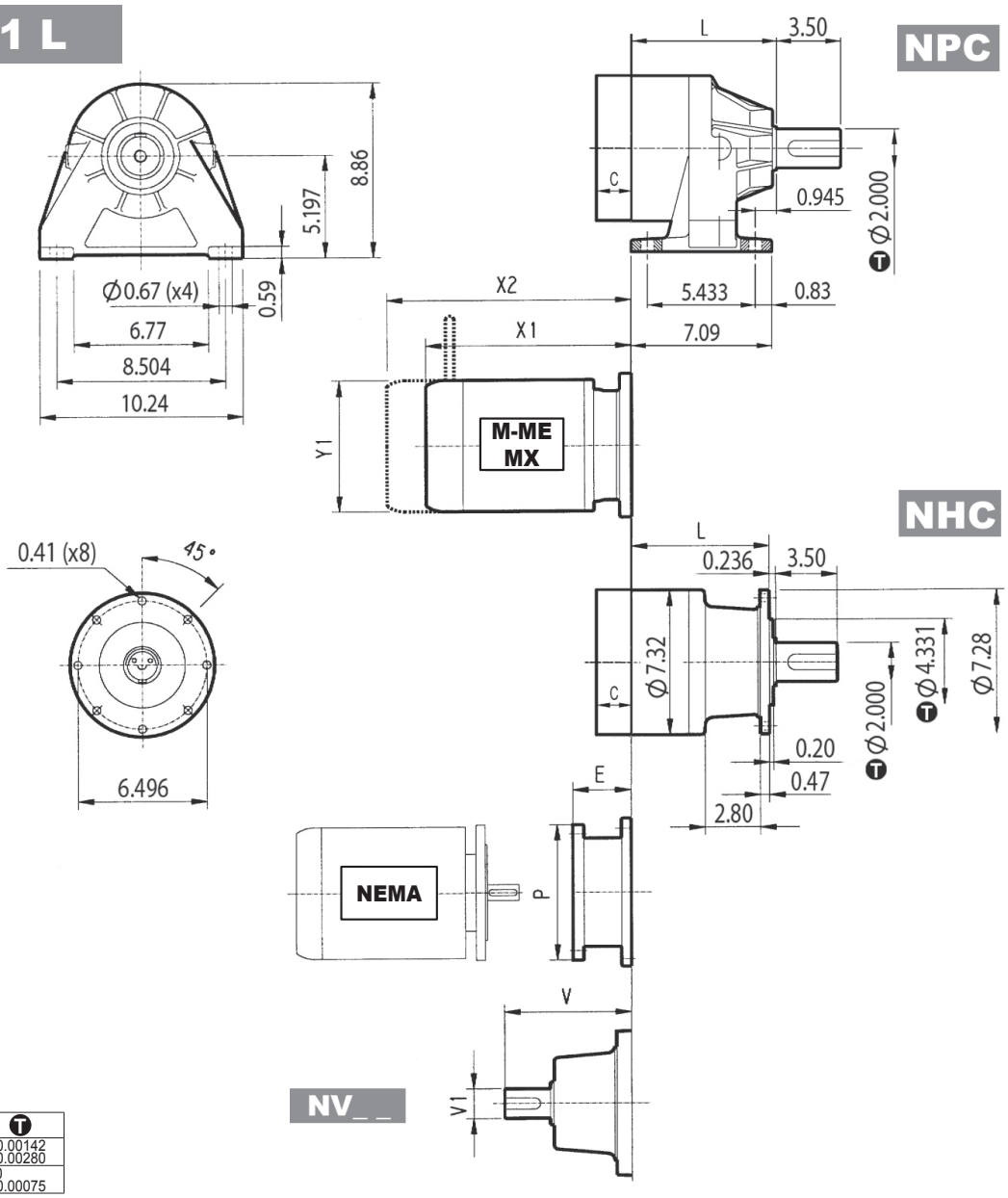

inch	T
4.331	-0.00142 / -0.00280
2.000	0 / -0.00075

Dimensions are in Inch except when shown in *italic [mm]*

	L		lbs	
	NPC	NHC	NPC	NHC
301 L1	5.20	4.96	57.3	50.7
301 L2	7.28	6.93	66.2	59.5
301 L3	9.37	9.13	75.0	68.4
301 L4	11.46	11.22	83.8	77.2

	V	V1	lbs	V	V1	lbs	C	Input
301 L1	5.996	1.125	13.2	6.437	1.625	15.4	1.457	A
301 L2	5.996	1.125	13.2	6.437	1.625	15.4	1.457	A
301 L3	5.996	1.125	13.2	6.437	1.625	15.4	1.457	A
301 L4	5.996	1.125	13.2	6.437	1.625	15.4	1.457	A

	N56C		N140TC		N180TC		N210TC		N250TC		N280TC	
	E	P	E	P	E	P	E	P	E	P	E	P
301 L1	4.51	6.70	4.51	6.70	5.22	8.82	5.22	8.82	5.22	8.82	6.12	11.81
301 L2	4.51	6.70	4.51	6.70	5.22	8.82	5.22	8.82	5.22	8.82	6.12	11.81
301 L3	4.51	6.70	4.51	6.70	5.22	8.82	5.22	8.82	5.22	8.82	6.12	11.81
301 L4	4.51	6.70	4.51	6.70	5.22	8.82	5.22	8.82	5.22	8.82	6.12	11.81

	S1 + M1			S2 + ME2S			S3 + ME3S			S3 + ME3L			S4 + ME4/MX4		
	X1	X2	Y1	X1	X2	Y1	X1	X2	Y1	X1	X2	Y1	X1	X2	Y1
301 L1	9.96	12.36	5.43	11.02	—	6.14	12.8	—	7.67	14.06	—	7.67	18.11	—	10.15
301 L2	9.96	12.36	5.43	11.02	—	6.14	12.8	—	7.67	14.06	—	7.67	18.11	—	10.15
301 L3	9.96	12.36	5.43	11.02	—	6.14	12.8	—	7.67	14.06	—	7.67	18.11	—	10.15
301 L4	9.96	12.36	5.43	11.02	—	6.14	12.8	—	7.67	14.06	—	7.67	18.11	—	10.15

301 R

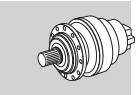

Imperial

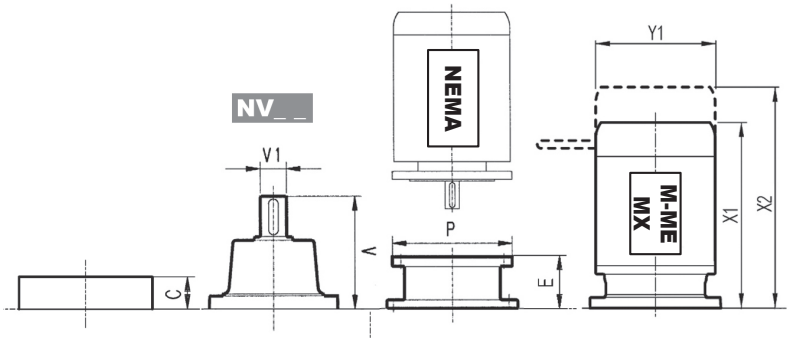

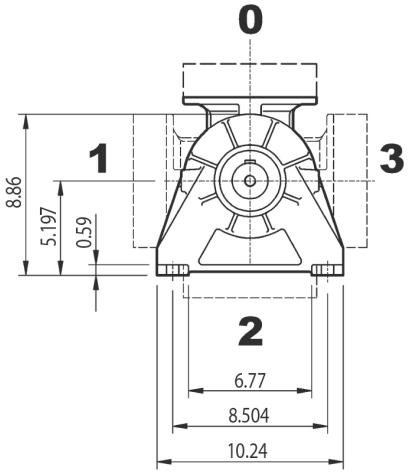

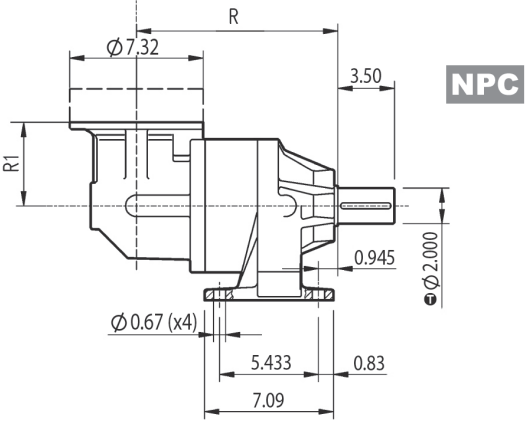

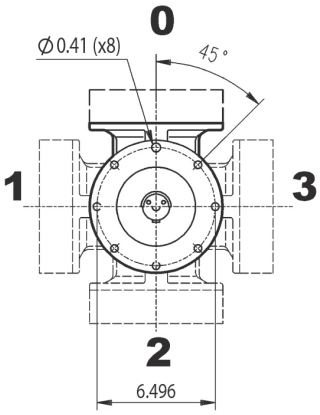

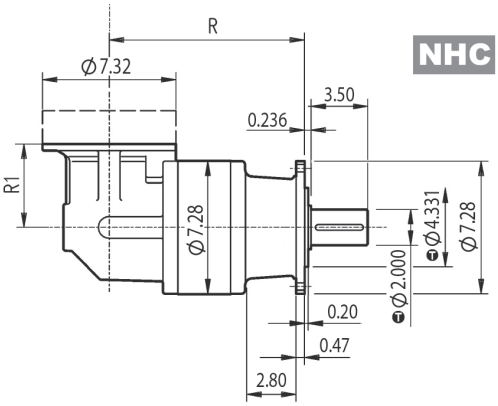

inch	T
4.331	-0.00142 -0.00280
2.000	0 -0.00075

Dimensions are in Inch except when shown in *italic [mm]*

	R		R1	lbs	
	NPC	NHC		NPC	NHC
301 R2	8.86	8.62	4.80	92.6	81.6
301 R3	10.94	10.71	4.80	101.4	90.4
301 R4	13.03	12.80	4.80	110.3	99.2

	V	V1	lbs	V	V1	lbs	C	Input
301 R2	5.996	1.125	13.2	6.437	1.625	15.4	1.457	A
301 R3	5.996	1.125	13.2	6.437	1.625	15.4	1.457	A
301 R4	5.996	1.125	13.2	6.437	1.625	15.4	1.457	A

	N56C		N140TC		N180TC		N210TC		N250TC		N280TC	
	E	P	E	P	E	P	E	P	E	P	E	P
301 R2	4.51	6.70	4.51	6.70	5.22	8.82	5.22	8.82	5.22	8.82	6.12	11.81
301 R3	4.51	6.70	4.51	6.70	5.22	8.82	5.22	8.82	5.22	8.82	6.12	11.81
301 R4	4.51	6.70	4.51	6.70	5.22	8.82	5.22	8.82	5.22	8.82	6.12	11.81

	S1 + M1			S2 + ME2S			S3 + ME3S			S3 + ME3L			S4 + ME4/MX4		
	X1	X2	Y1	X1	X2	Y1	X1	X2	Y1	X1	X2	Y1	X1	X2	Y1
301 R2	9.96	12.36	5.43	12.91	—	6.14	14.69	—	7.67	15.94	—	7.67	20	—	10.15
301 R3	9.96	12.36	5.43	12.91	—	6.14	14.69	—	7.67	15.94	—	7.67	—	—	—
301 R4	9.96	12.36	5.43	12.91	—	6.14	14.69	—	7.67	—	—	—	—	—	—

Bonfiglioli Riduttori

3/V 01 L3

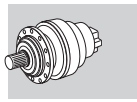

Metric

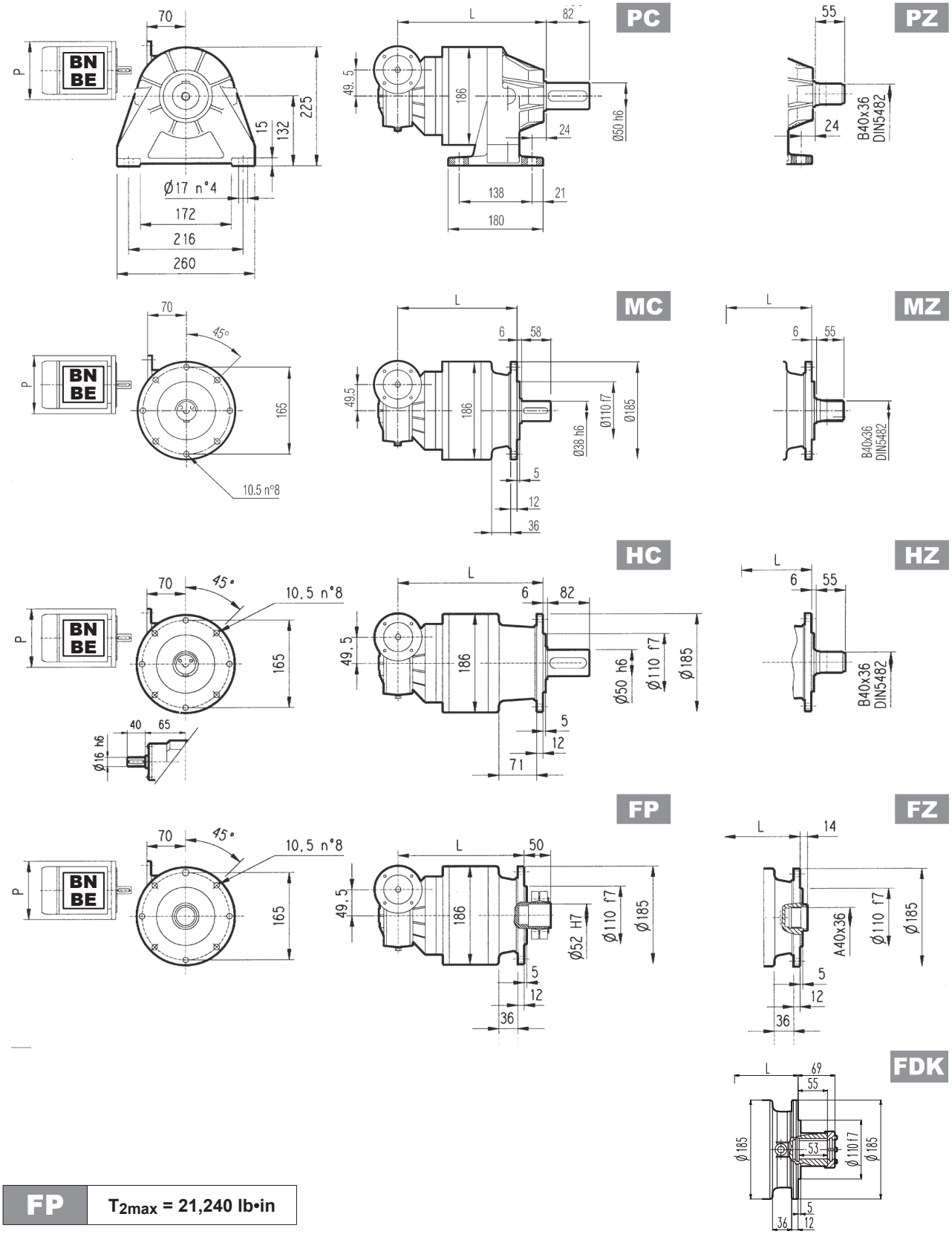

FP	T_{2max} = 21,240 lb•in

Dimensions are in mm

	L				Kg				P63	P71	P80
	MC - MZ	PC - PZ	HC - HZ	FP - FZ - FDK	MC - MZ	PC - PZ	HC - HZ	FP - FZ - FDK	P	P	P
3/V 01 L3	267	308	302	267	28	35	30	26	140	160	200

3/V 01 L3

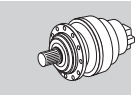

Imperial

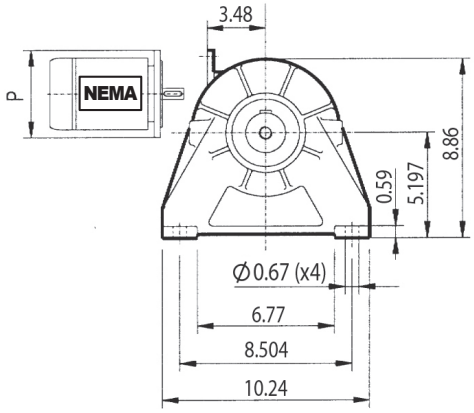

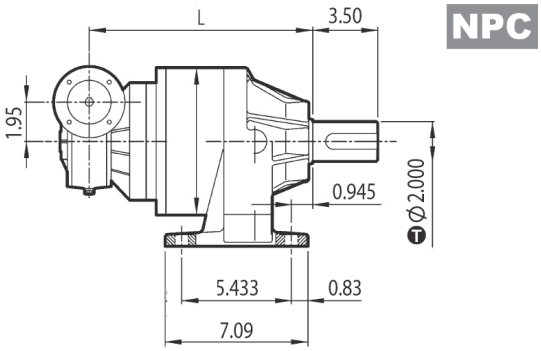

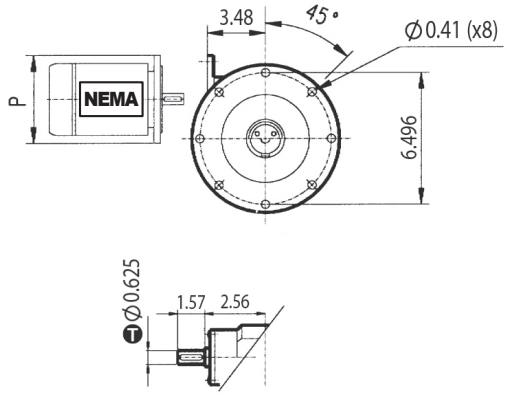

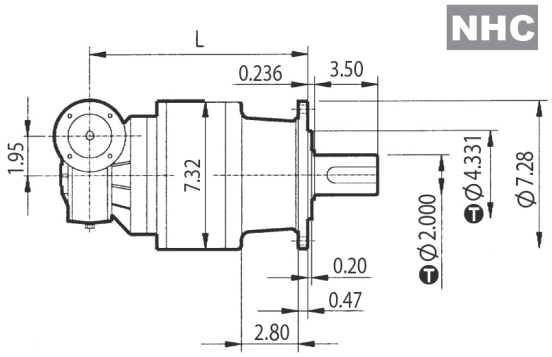

inch	T
4.331	-0.00142 -0.00280
2.000	0 -0.00075
0.625	0 -0.00043

Dimensions are in Inch except when shown in *italic [mm]*

	L		lbs		N56C
	NPC	NHC	NPC	NHC	P
3/V 01 L3	12.12	11.89	77.16	66.14	6.54

Bonfiglioli Riduttori

3/A 01 L2

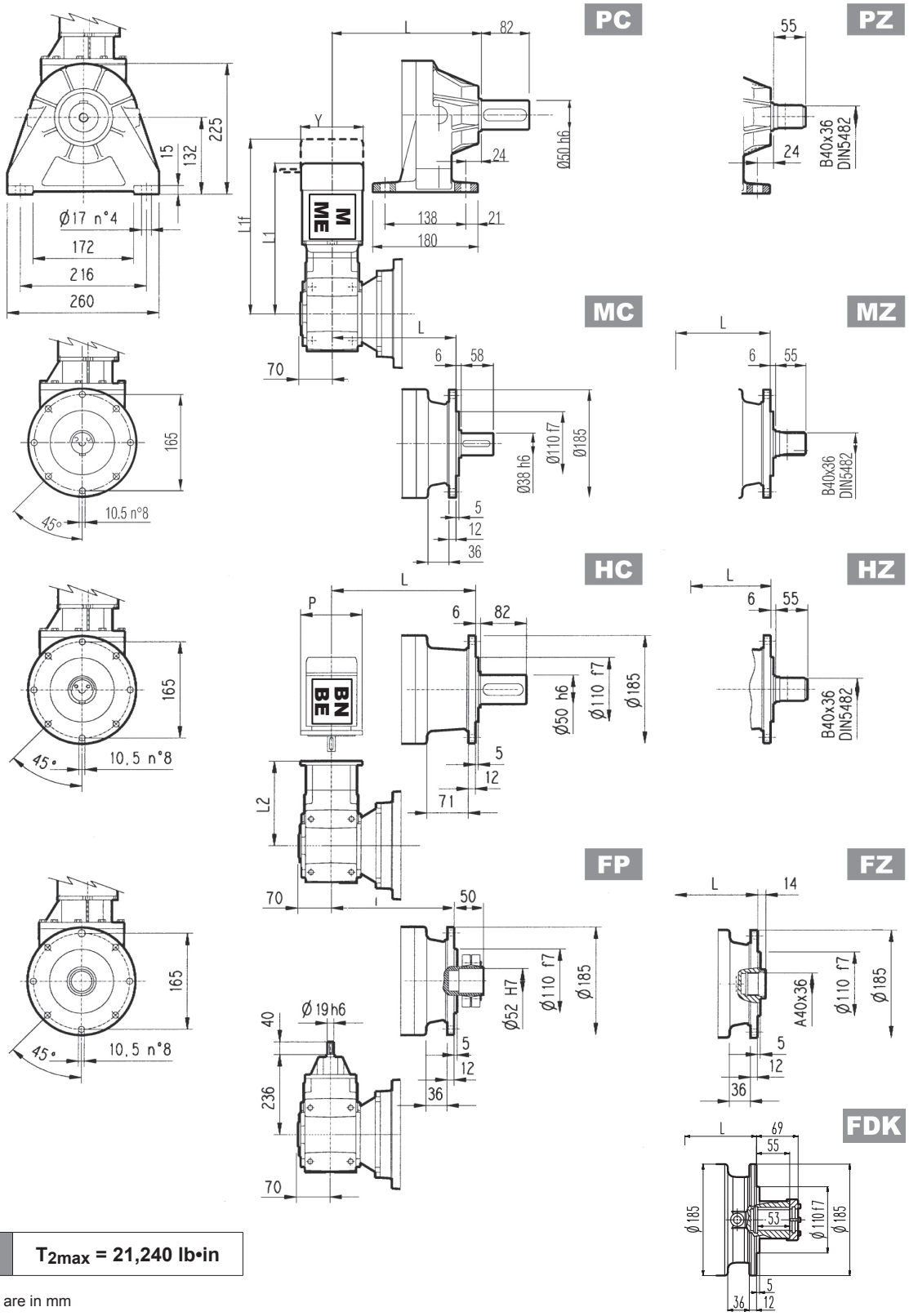

FP | **T_{2max} = 21,240 lb•in**

Dimensions are in mm

	L				Kg			
	MC - MZ	PC - PZ	HC - HZ	FP - FZ - FDK	MC - MZ	PC - PZ	HC - HZ	FP - FZ - FDK
3/A 01 L2	202	208	237	202	40	46	43	40

	P63		P71		P80		P90		P100		S1 + M1			S2 + ME2S			S3 + ME3S			S3 + ME3L		
	L2	P	L2	P	L2	P	L2	P	L2	P	L1	L1f	Y	L1	L1f	Y	L1	L1f	Y	L1	L1f	Y
3/A 01 L2	226	140	226	160	245.5	200	245.5	200	255.5	250	382	442	138	408	—	156	453	—	195	484	—	195

3/A 01 L2

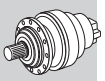

Imperial

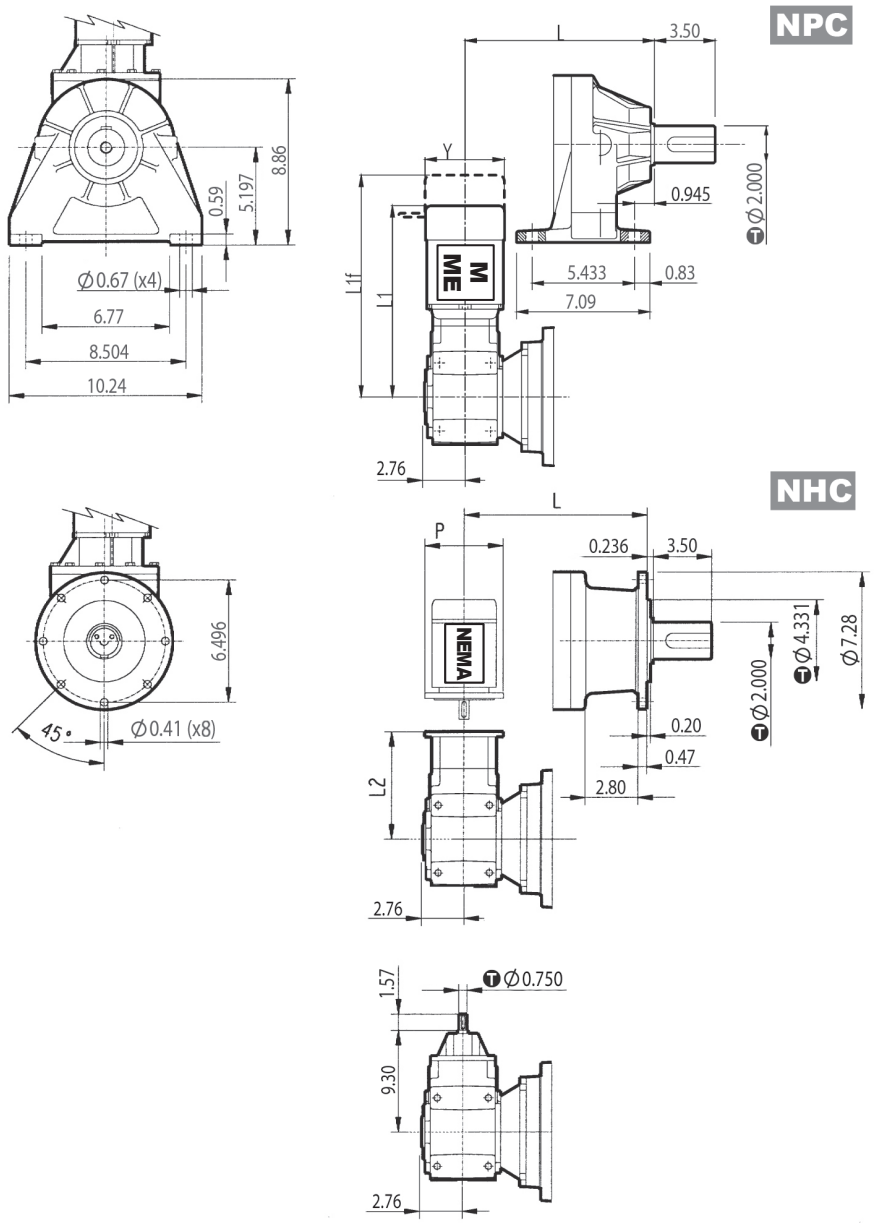

inch	T
4.331	-0.00142 -0.00280
2.000	0 -0.00075
0.750	0 -0.00051

Dimensions are in Inch except when shown in *italic [mm]*

	L		lbs	
	NPC	NHC	NPC	NHC
3/A 01 L2	8.19	9.33	101.4	94.8

	N56C		N140TC		N180TC		S1 + M1			S2 + ME2S			S3 + ME3S			S3 + ME3L		
	L2	P	L2	P	L2	P	L1	L1f	Y	L1	L1f	Y	L1	L1f	Y	L1	L1f	Y
3/A 01 L2	9.69	6.50	9.69	6.50	10.43	9.00	15.04	17.40	5.43	16.06	-	6.14	17.83	-	7.68	19.05	-	7.68

Bonfiglioli Riduttori

301 L | 301 R | 3/V 01 L3 | 3/A 01 L2

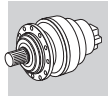

Metric

Imperial

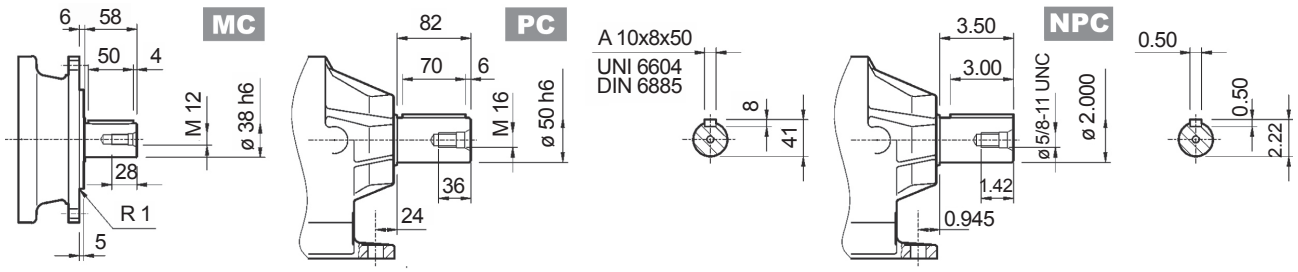

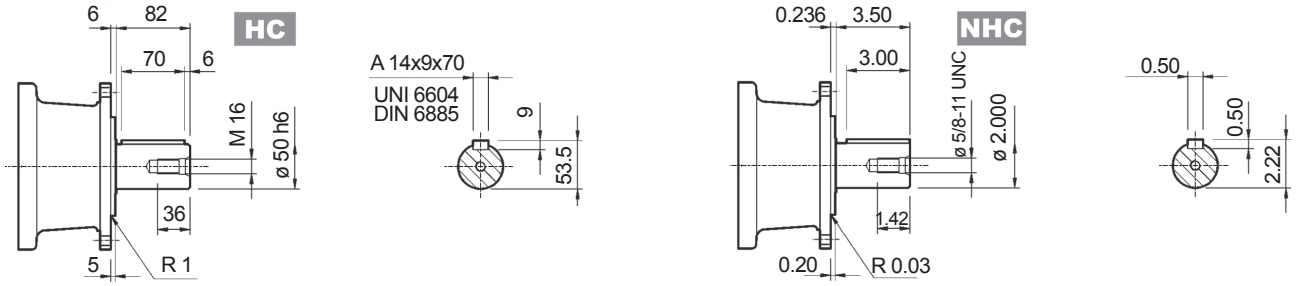

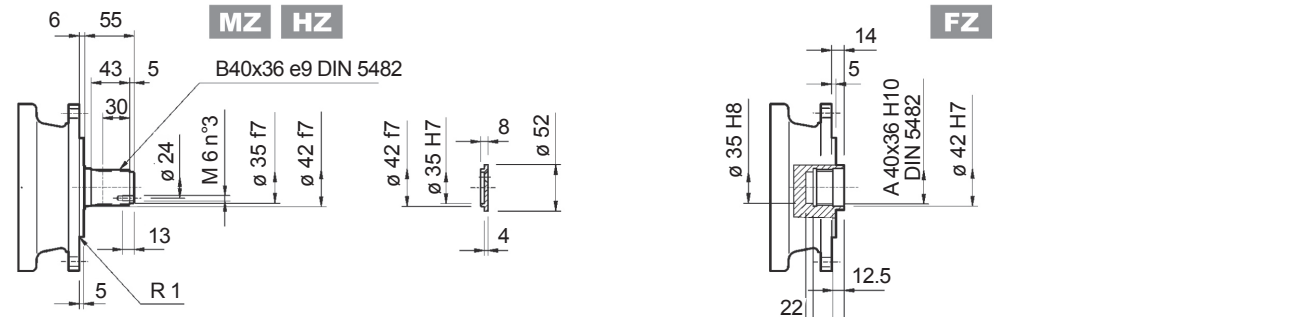

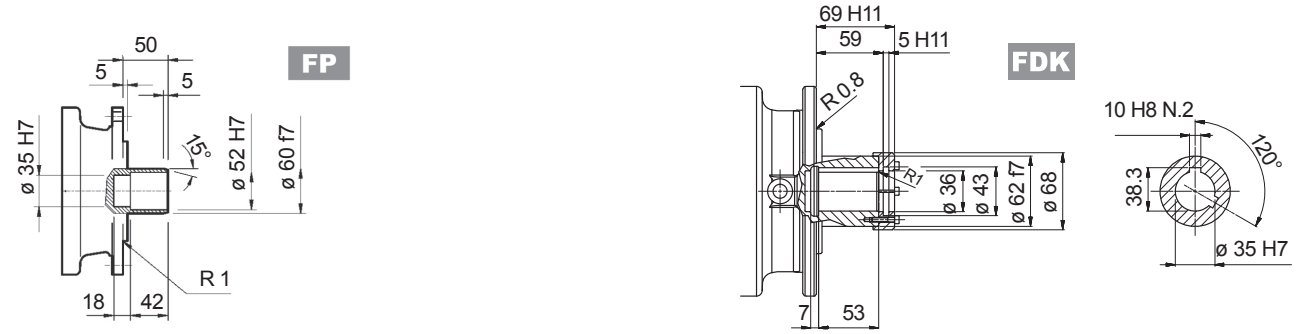

FP	T_{2max} = 21,240 lb•in

Dimensions are in mm when shown in italic, otherwise dimensions are in inches

inch	T
2.000	0 / -0.00075

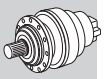

Metric

Flange

W0A

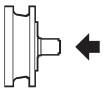

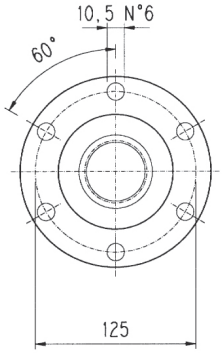

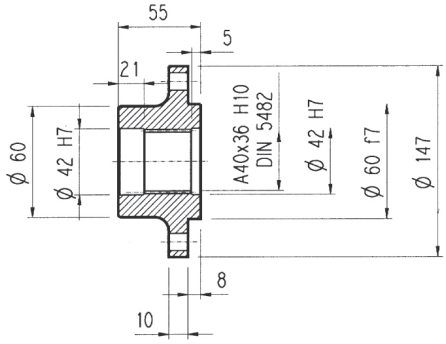

Material: Steel C40

Dimensions are in mm

Pinions

P...

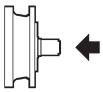

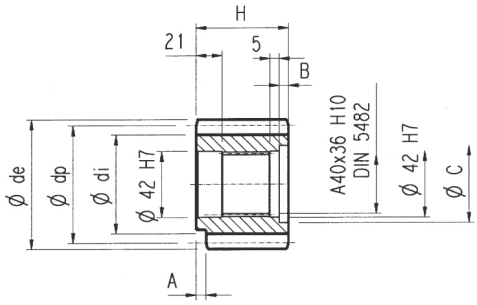

α = 20°

Dimensions are in mm

	m	z	x	dp	di	de	H	A	B	C	Material
PBE	4.5	14	0.507	63	56	75.5	55	—	—	—	Steel 39NiCrMo3 hardened and tempered
PCE	5	14	0.500	70	62.5	84.8	65	—	10	53	
PDC	6	12	0.250	72	61	84.8	59	14	4	54	
PDE	6	14	0.500	84	73	99.6	65	—	10	54	

Sleeve coupling

M0A

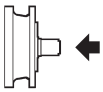

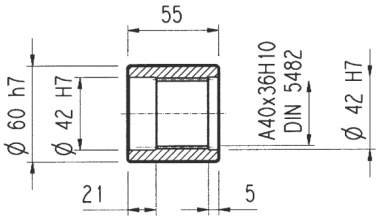

Material: Steel 16CrNi4

Dimensions are in mm

Splined bars

B0A

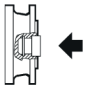

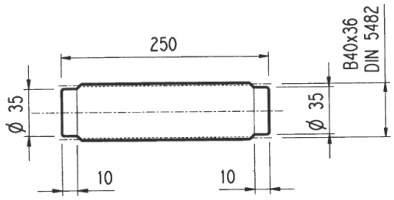

Material: Case hardening steel 18NiCrMo5 UNI 5331
must be case hardened 50-55 HRC

Shrink disc

G0A

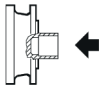

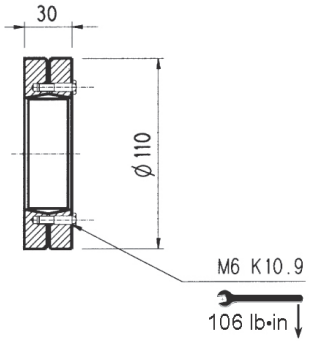

Dimensions are in mm

301 L 301 R

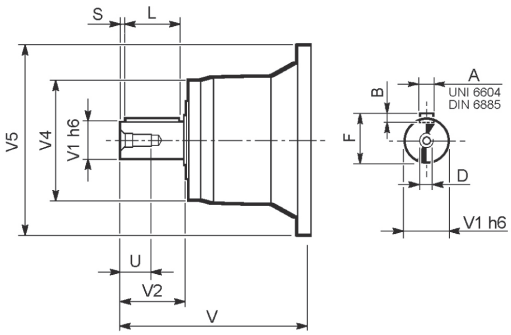

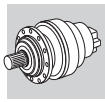

Metric

Dimensions are in mm

		V	V1	V2	V4	V5	A	B	F	L	S	D	U
301 L1	**V01A**	137.5	24	36	120	186	8	7	27	30	3	M8	19
	V01B	158	38	58	120	186	10	8	41	50	4	M12	28
301 L2	**V01A**	137.5	24	36	120	186	8	7	27	30	3	M8	19
	V01B	158	38	58	120	186	10	8	41	50	4	M12	28
301 L3	**V01A**	137.5	24	36	120	186	8	7	27	30	3	M8	19
	V01B	158	38	58	120	186	10	8	41	50	4	M12	28
301 L4	**V01A**	137.5	24	36	120	186	8	7	27	30	3	M8	19
	V01B	158	38	58	120	186	10	8	41	50	4	M12	28
301 R2-R3-R4	**V01A**	137.5	24	36	120	186	8	7	27	30	3	M8	19
	V01B	158	38	58	120	186	10	8	41	50	4	M12	28

301 L 301 R

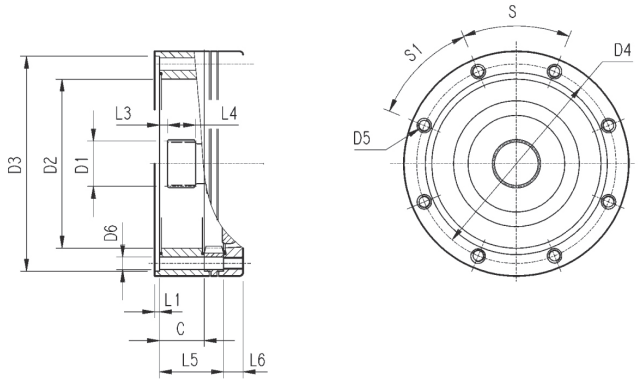

Dimensions are in mm

		C	D1	D2	D3	D4	D5	D6	L1	L2	L3	L4	L5	L6	S	S1	Input
301 L1	**V9AA**	37	40x36 DIN5482	140	178 H7	165	M10 n°8	11	4	—	9	18	65	18	45°	45°	A
301 L2	**V9AA**	37	40x36 DIN5482	140	178 H7	165	M10 n°8	11	4	—	9	18	118	18	45°	45°	A
301 L3	**V9AA**	37	40x36 DIN5482	140	178 H7	165	M10 n°8	11	4	—	9	18	171	18	45°	45°	A
301 L4	**V9AA**	37	40x36 DIN5482	140	178 H7	165	M10 n°8	11	4	—	9	18	224	18	45°	45°	A
301 R2-R3-R4	**V9AA**	37	40x36 DIN5482	140	178 H7	165	M10 n°8	11	4	—	9	18	37	18	45°	45°	A

3/V 01 L3

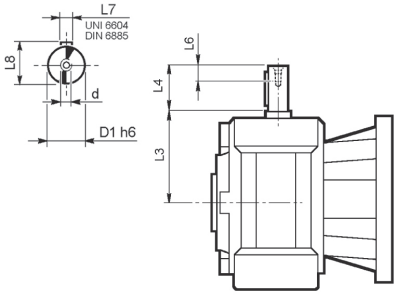

Dimensions are in mm

	D1 h6	L3	L4	L6	L7	L8	d
3/V 01 L3_HS	16	65	40	16	5	18	M6

3/A 01 L2

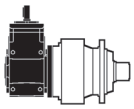

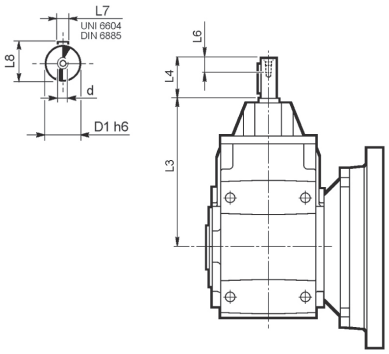

Dimensions are in mm

	D1 h6	L3	L4	L6	L7	L8	d
3/A 01 L2_HS	19	235.5	40	16	6	21.5	M6

301 L 301 R

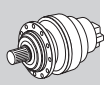

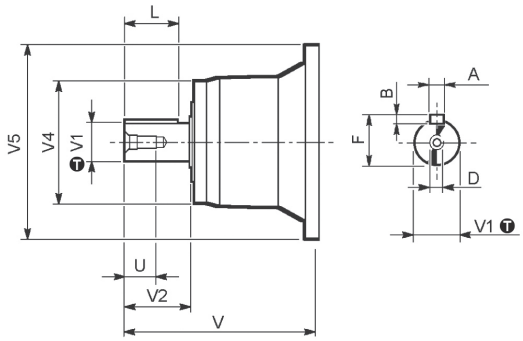

inch	T
1.125	0 / -0.00051
1.625	0 / -0.00053

Dimensions are in Inch except when shown in *italic [mm]*

		V	V1	V2	V4	V5	A	B	F	L	D	U
301 L1	**NV01A**	5.996	1.125	2.000	4.980	7.323	0.250	0.250	1.236	1.752	3/8-16 UNC	0.866
	NV01B	6.437	1.625	2.500	4.980	7.323	0.375	0.375	1.791	2.000	1/2-13 UNC	1.102
301 L2	**NV01A**	5.996	1.125	2.000	4.980	7.323	0.250	0.250	1.236	1.752	3/8-16 UNC	0.866
	NV01B	6.437	1.625	2.500	4.980	7.323	0.375	0.375	1.791	2.000	1/2-13 UNC	1.102
301 L3	**NV01A**	5.996	1.125	2.000	4.980	7.323	0.250	0.250	1.236	1.752	3/8-16 UNC	0.866
	NV01B	6.437	1.625	2.500	4.980	7.323	0.375	0.375	1.791	2.000	1/2-13 UNC	1.102
301 L4	**NV01A**	5.996	1.125	2.000	4.980	7.323	0.250	0.250	1.236	1.752	3/8-16 UNC	0.866
	NV01B	6.437	1.625	2.500	4.980	7.323	0.375	0.375	1.791	2.000	1/2-13 UNC	1.102
301 R2-R3-R4	**NV01A**	5.996	1.125	2.000	4.980	7.323	0.250	0.250	1.236	1.752	3/8-16 UNC	0.866
	NV01B	6.437	1.625	2.500	4.980	7.323	0.375	0.375	1.791	2.000	1/2-13 UNC	1.102

301 L 301 R

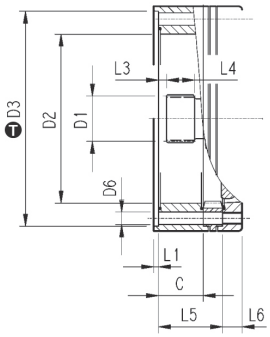

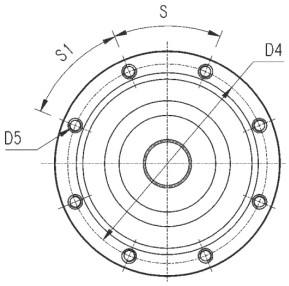

inch	T
7.01	+0.00157 / 0

Dimensions are in Inch except when shown in *italic [mm]*

		C	D1	D2	D3	D4	D5	D6	L1	L2	L3	L4	L5	L6	S	S1	Input
301 L1	**V9AA**	1.46	*40x36 DIN5482*	5.51	7.01	6.50	*M10 n°8*	0.43	0.16	—	0.35	0.71	2.56	0.71	45°	45°	A
301 L2	**V9AA**	1.46	*40x36 DIN5482*	5.51	7.01	6.50	*M10 n°8*	0.43	0.16	—	0.35	0.71	4.65	0.71	45°	45°	A
301 L3	**V9AA**	1.46	*40x36 DIN5482*	5.51	7.01	6.50	*M10 n°8*	0.43	0.16	—	0.35	0.71	6.73	0.71	45°	45°	A
301 L4	**V9AA**	1.46	*40x36 DIN5482*	5.51	7.01	6.50	*M10 n°8*	0.43	0.16	—	0.35	0.71	8.82	0.71	45°	45°	A
301 R2-R3-R4	**V9AA**	1.46	*40x36 DIN5482*	5.51	7.01	6.50	*M10 n°8*	0.43	0.16	—	0.35	0.71	1.46	0.71	45°	45°	A

3/V 01 L3

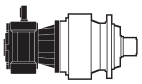

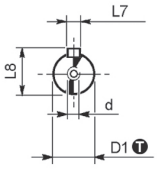

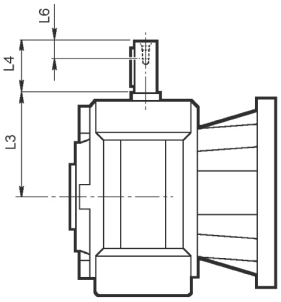

inch	T
0.625	0 / -0.00043

Dimensions are in Inch except when shown in *italic [mm]*

	D1	L3	L4	L6	L7	L8	d
3/V 01 L3_NHS	0.625	2.57	1.575	0.63	0.188	0.705	1/4-20UNC

3/A 01 L2

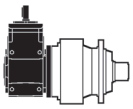

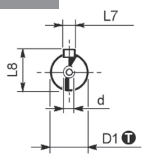

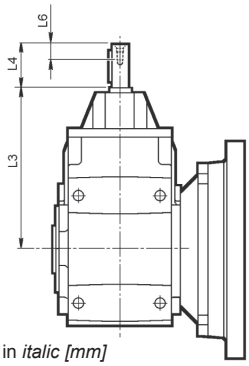

inch	T
0.750	0 / -0.00051

Dimensions are in Inch except when shown in *italic [mm]*

	D1	L3	L4	L6	L7	L8	d
3/A 01 L2_NHS	0.750	9.30	1.575	0.63	0.188	0.832	1/4-20UNC

Permissible radial and axial loads on output shaft with $Fh_2 : n_2 \cdot h = 100000$

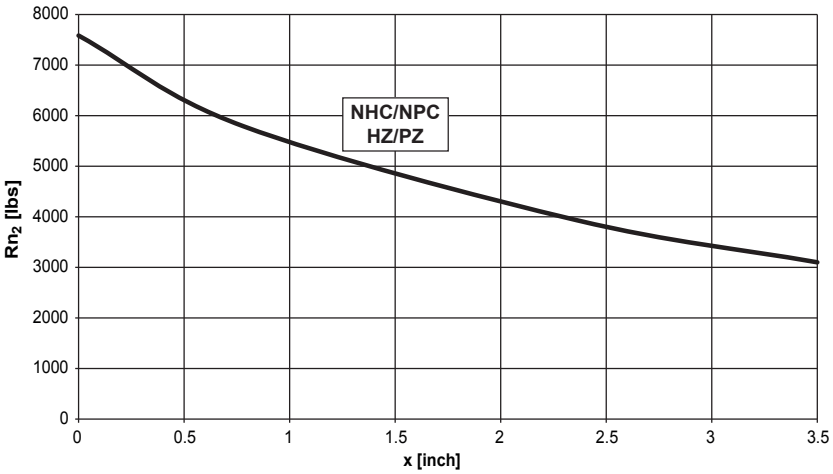

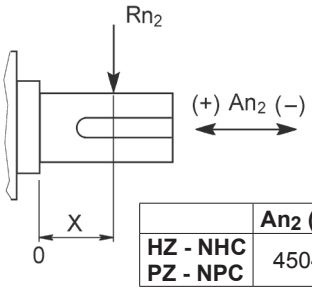

	An2 (+)	An2 (-)
HZ - NHC PZ - NPC	4504	4504

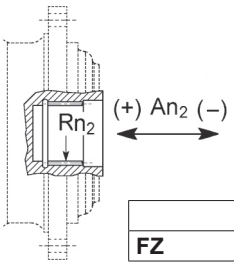

	Rn2	An2 (+/-)
FZ	836	836

Load corrective factor fh_2 on shafts	$Fh_2 = n_2 \cdot h$		10000	25000	50000	100000	500000	1000000
	fh_2	FZ	**2.15**	**1.59**	**1.26**	**1.00**	**0.58**	**0.46**
		NHC - NPC - HZ -PZ	**1.27**	**1.27**	**1.26**	**1.00**	**0.62**	**0.50**

Permissible radial loads on input shaft with $Fh_1 : n_1 \cdot h = 250000$

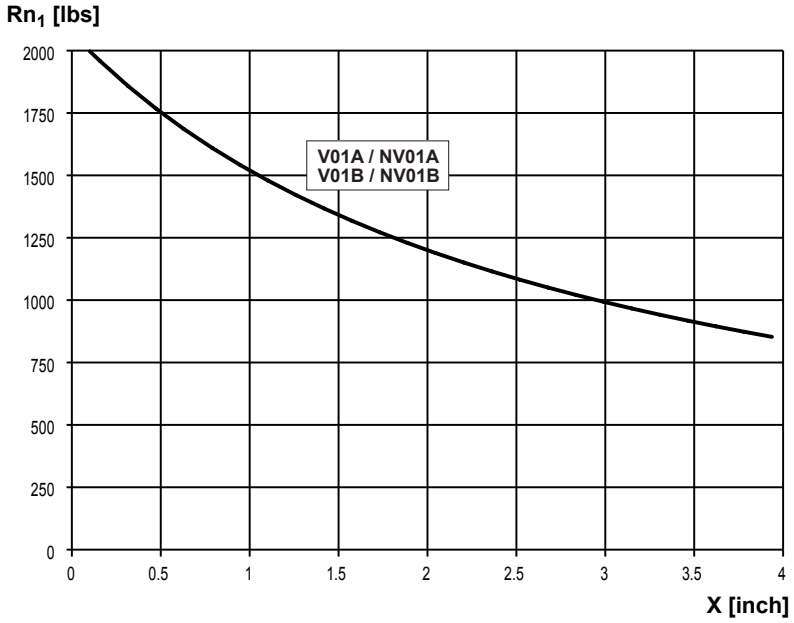

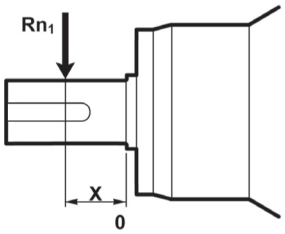

Load corrective factor fh_1 on shafts	$Fh_1 = n_1 \cdot h$	250000	500000	1000000	2000000	5000000	10000000
	fh_1	**1**	**0.79**	**0.63**	**0.50**	**0.37**	**0.29**

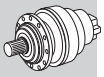

303 L

	Hydraulic motor										
	MG							542			Kg
cm³	050	080	100	125	160	200	250				
	M1							M2	M3	M4	
303 L1	—	—	—	—	203	210	219	135	77	1/4G	20
303 L2	162	167	171	175	181	188	—	113	60	1/4G	14

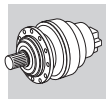

Metric

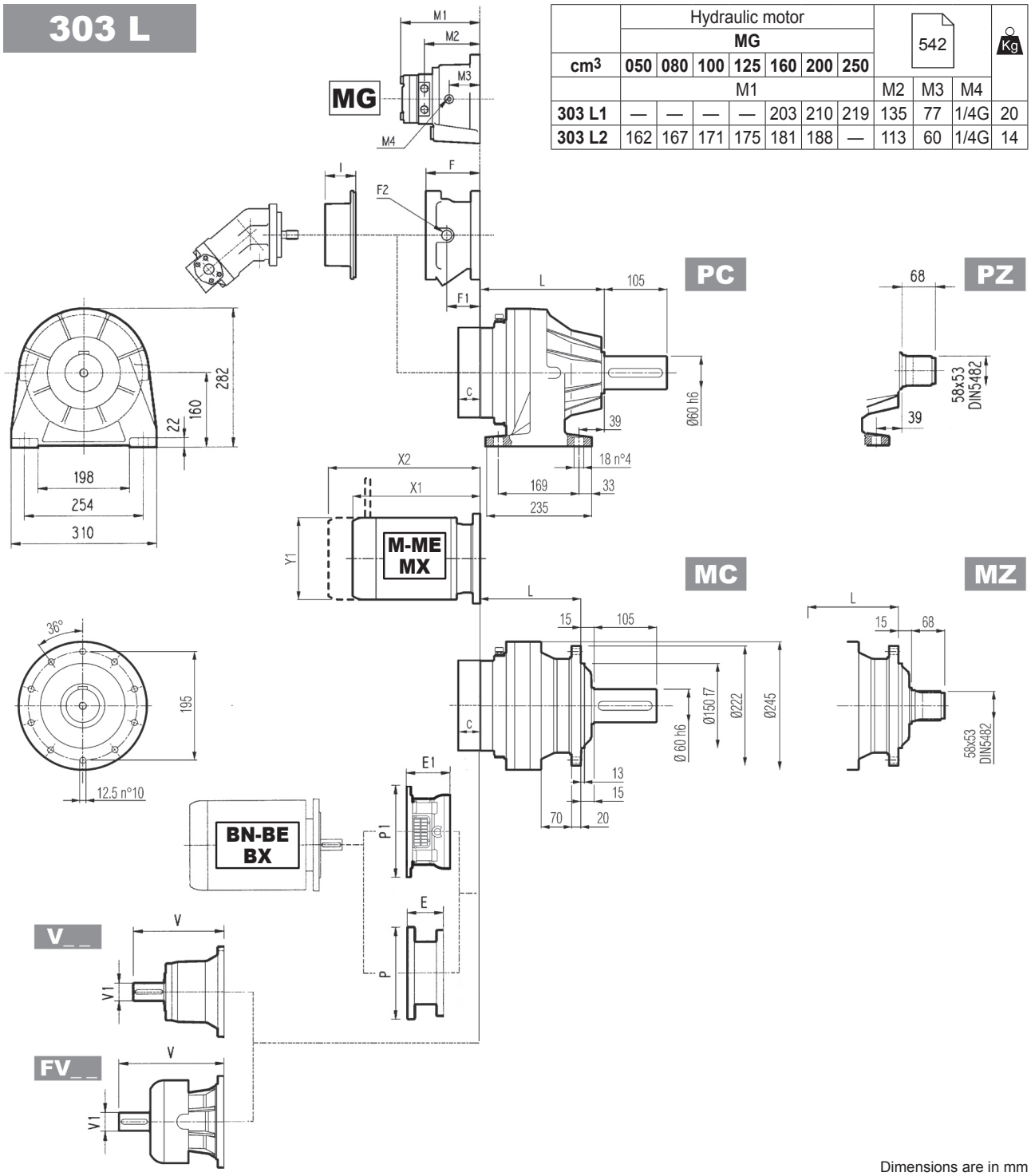

Dimensions are in mm

	L				Kg			
	MC - MZ	PC - PZ	HC - HZ	FP - FZ - FDK	MC - MZ	PC - PZ	HC - HZ	FP - FZ - FDK
303 L1	125	165	150	125	31	40	35	31
303 L2	178	218	203	178	35	44	39	35
303 L3	231	271	256	231	39	48	43	39
303 L4	284	324	309	284	43	52	47	43

	V	V1	Kg	V	V1	Kg	V	V1	Kg	C	Input	I	F	F1	F2	Type	Input	Kg
303 L1	239	48	15	—	—	—	276	48	17	37	A		145	95	1/4 G	5	A	16
303 L2	137.5	24	6	158	38	7	—	—	—	37	A		105	65	1/4 G	4	A	10
303 L3	137.5	24	6	158	38	7	—	—	—	37	A		105	65	1/4 G	4	A	10
303 L4	137.5	24	6	158	38	7	—	—	—	37	A	532	105	65	1/4 G	4	A	10

303 L

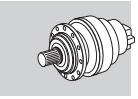

Metric

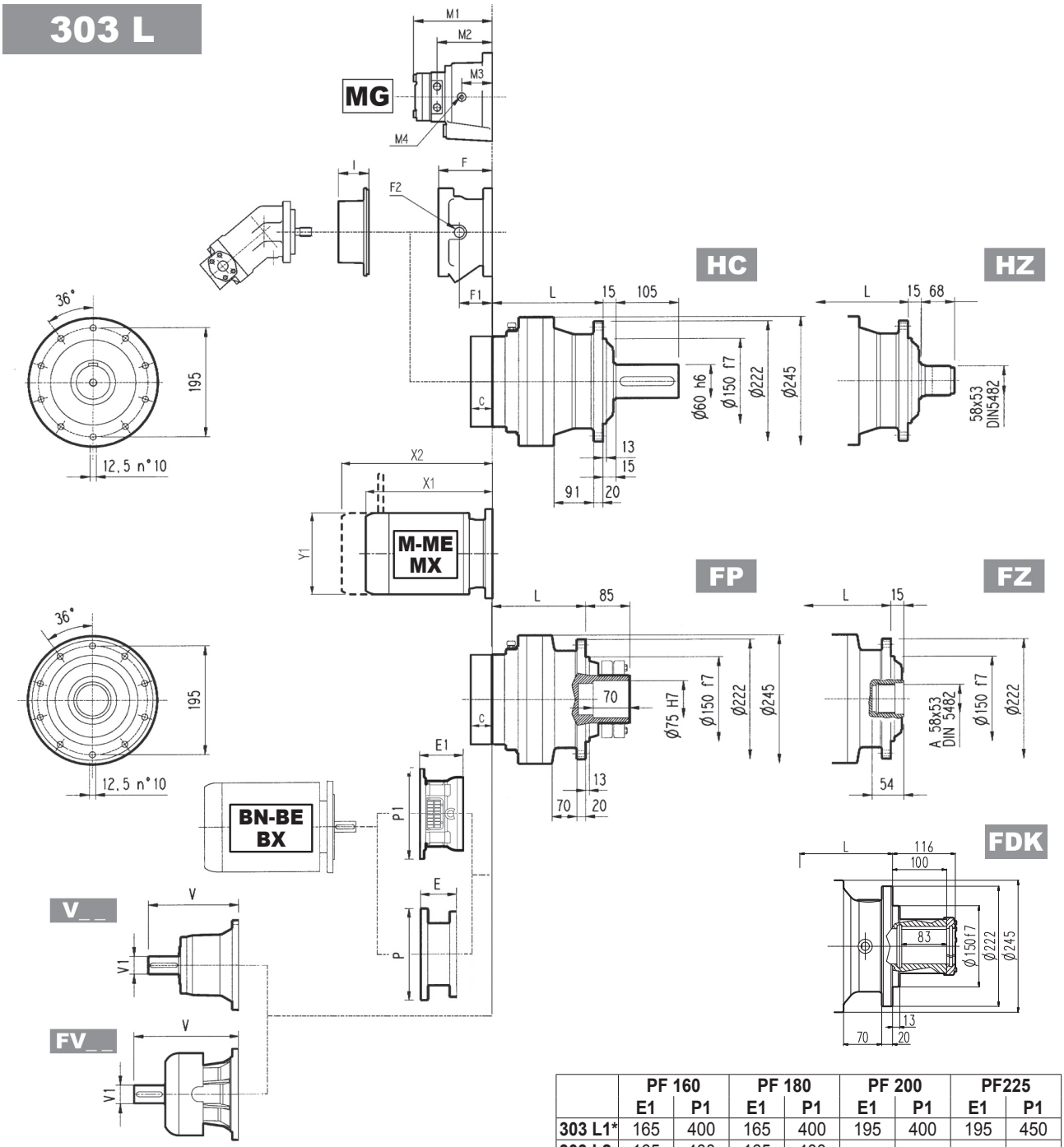

	PF 160		PF 180		PF 200		PF225	
	E1	P1	E1	P1	E1	P1	E1	P1
303 L1*	165	400	165	400	195	400	195	450
303 L2	165	400	165	400	—	—	—	—
303 L3	165	400	165	400	—	—	—	—

(*): for PC-PZ versions contact Bonfiglioli technical service
NOTE: For R design contact Bonfiglioli Technical service

FP | **T_{2max} = 46,020 lb•in**

Dimensions are in mm

	P71		P80		P90		P100		P112		P132		P160		P180		P200	
	E	P	E	P	E	P	E	P	E	P	E	P	E	P	E	P	E	P
303 L1	—	—	—	—	—	—	—	—	—	—	114	300	144	350	144	350	174	400
303 L2	65	160	84	200	84	200	94	250	94	250	114	300	144	350	—	—	—	—
303 L3	65	160	84	200	84	200	94	250	94	250	114	300	144	350	—	—	—	—
303 L4	65	160	84	200	84	200	94	250	94	250	114	300	144	350	—	—	—	—

	S1 + M1			S2 + ME2S			S3 + ME3S			S3 + ME3L			S4 + ME4/MX4			S5 + ME5S/MX5S			S5 + ME5L/MX5L		
	X1	X2	Y1	X1	X2	Y1	X1	X2	Y1	X1	X2	Y1	X1	X2	Y1	X1	X2	Y1	X1	X2	Y1
303 L1	—	—	—	—	—	—	—	—	—	—	—	—	460	—	258	552	—	310	596	—	310
303 L2	253	314	138	280	—	156	325	—	195	357	—	195	460	—	258	—	—	—	—	—	—
303 L3	253	314	138	280	—	156	325	—	195	357	—	195	460	—	258	—	—	—	—	—	—
303 L4	253	314	138	280	—	156	325	—	195	357	—	195	460	—	258	—	—	—	—	—	—

Bonfiglioli Riduttori

303 R

	Hydraulic motor										
	MG							542			Kg
cm3	050	080	100	125	160	200	250				
	M1							M2	M3	M4	
303 R2	162	167	171	175	181	188	—	113	60	1/4G	14

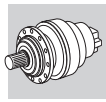

Metric

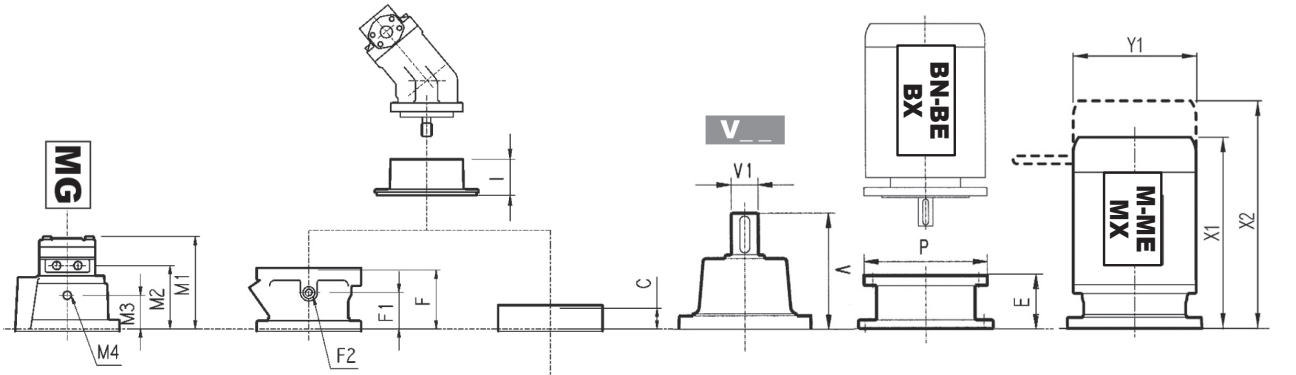

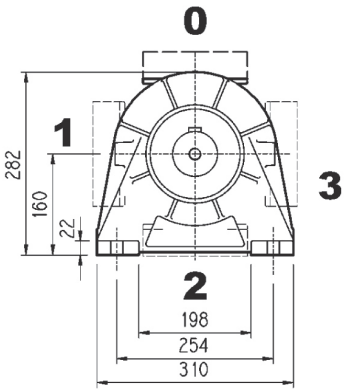

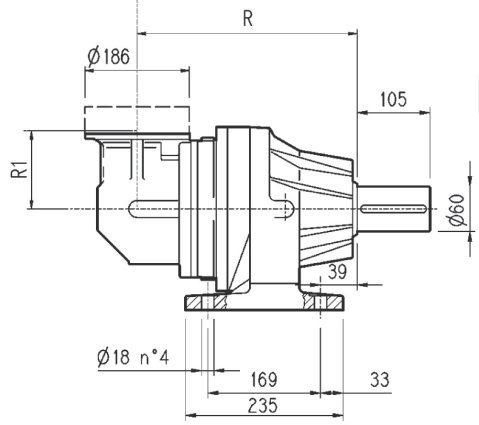

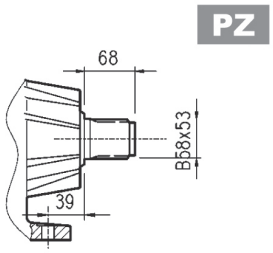

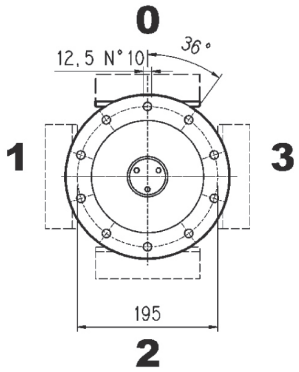

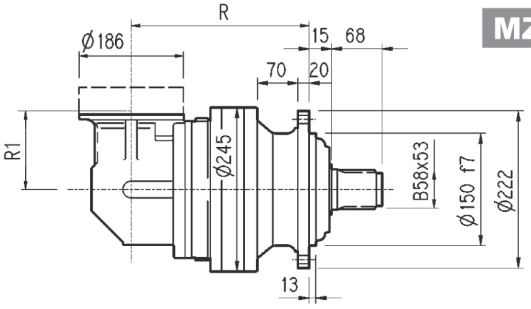

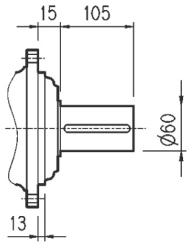

Dimensions are in mm

	R				R1	Kg			
	MC - MZ	PC - PZ	HC - HZ	FP - FZ - FDK		MC - MZ	PC - PZ	HC - HZ	FP - FZ - FDK
303 R2	217	257	242	217	140	51	60	55	51
303 R3	270	310	295	270	122	49	58	53	49
303 R4	323	363	348	323	122	53	62	57	53

	V	V1	Kg	V	V1	Kg	C	Input	I	F	F1	F2	Type	Input	Kg
303 R2	137.5	24	6	158	38	7	37	A		105	65	1/4 G	4	A	10
303 R3	137.5	24	6	158	38	7	37	A		105	65	1/4 G	4	A	10
303 R4	137.5	24	6	158	38	7	37	A	532	105	65	1/4 G	4	A	10

303 R

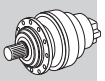

Metric

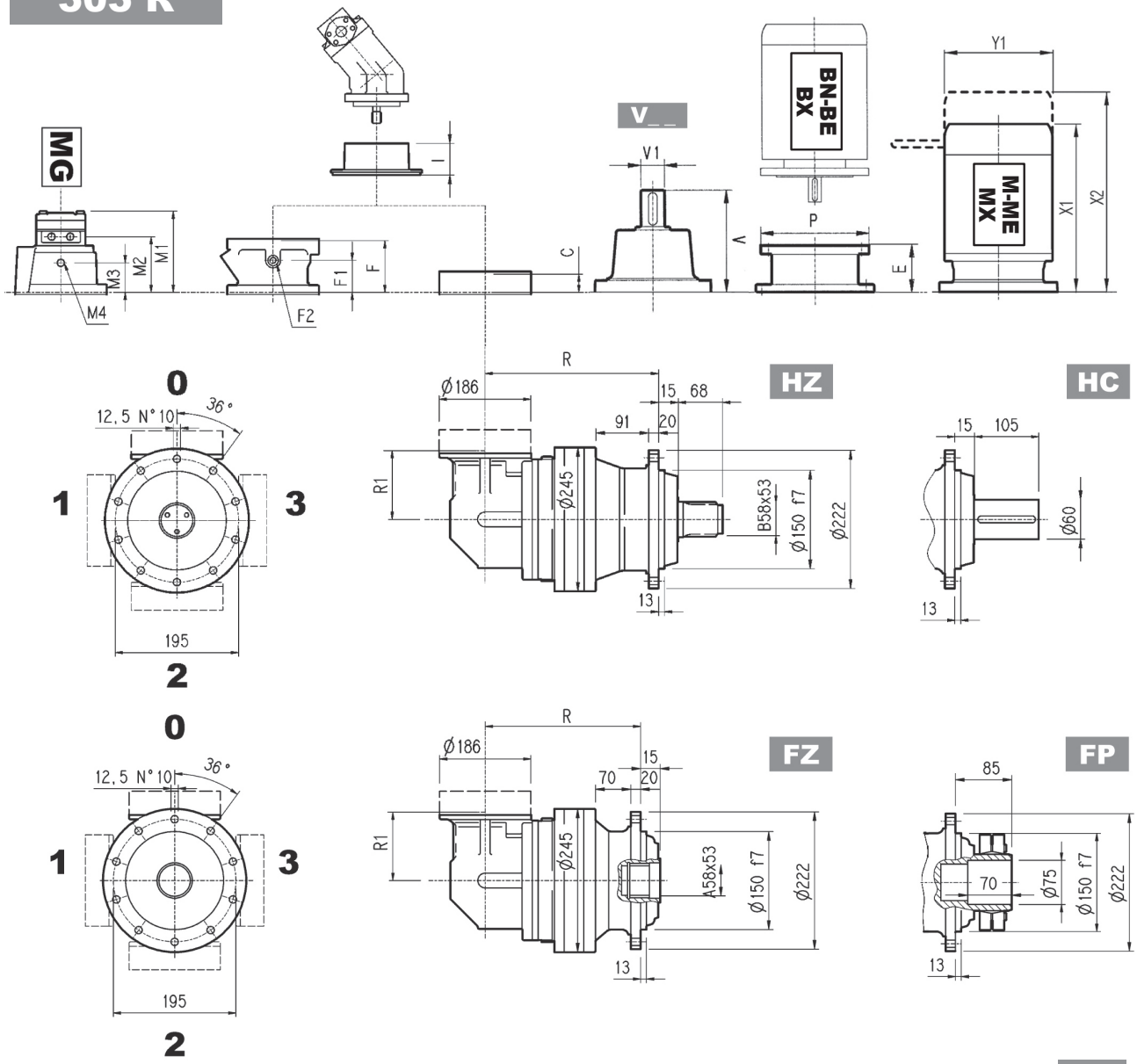

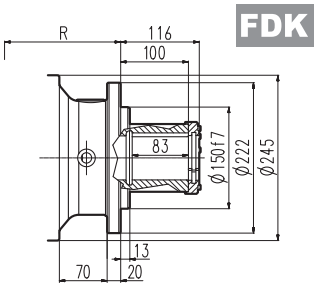

FP	T_{2max} = 46,020 lb•in

Dimensions are in mm

	P71		P80		P90		P100		P112		P132	
	E	P	E	P	E	P	E	P	E	P	E	P
303 R2	65	160	84	200	84	200	94	250	94	250	114	300
303 R3	65	160	84	200	84	200	94	250	94	250	114	300
303 R4	65	160	84	200	84	200	94	250	94	250	114	300

	S1 + M1			S2 + ME2S			S3 + ME3S			S3 + ME3L			S4 + ME4/MX4		
	X1	X2	Y1	X1	X2	Y1	X1	X2	Y1	X1	X2	Y1	X1	X2	Y1
303 R2	—	—	—	328	—	156	373	—	195	405	—	195	508	—	258
303 R3	253	314	138	328	—	156	373	—	195	405	—	195	—	—	—
303 R4	253	314	138	328	—	156	373	—	195	405	—	195	—	—	—

Bonfiglioli Riduttori

303 L

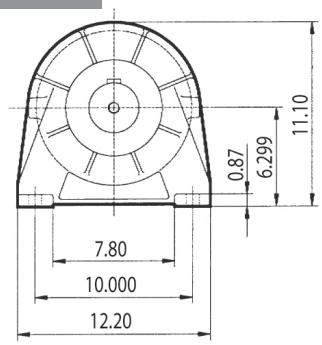

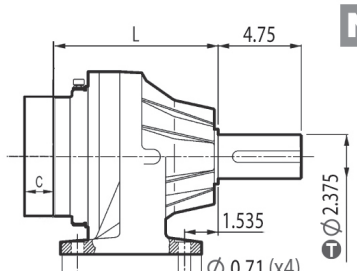

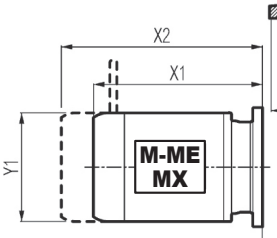

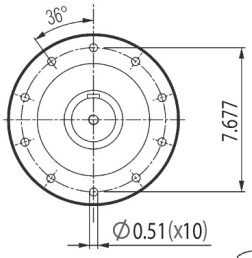

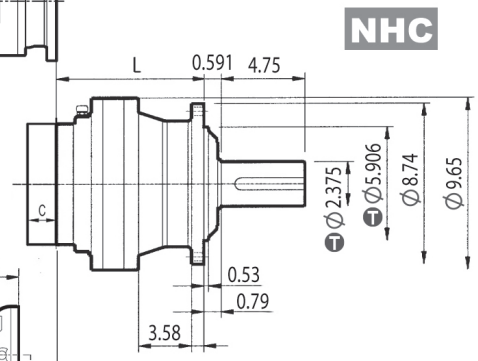

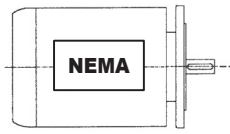

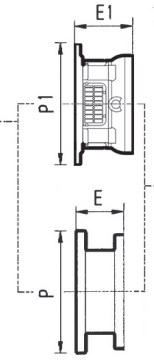

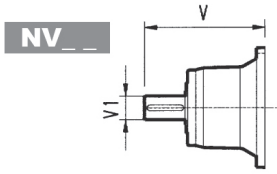

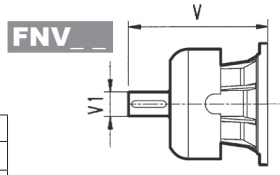

inch	Ⓣ
5.906	-0.00169 / -0.00327
2.375	0 / -0.00075

Dimensions are in Inch except when shown in *italic [mm]*

	PF N250TC		PF N280TC		PF N320TC		PF N360TC	
	E1	P1	E1	P1	E1	P1	E1	P1
303 L1*	8.661	15.748	8.661	15.748	9.843	15.748	10.236	17.717
303 L2	8.661	15.748	8.661	15.748	—	—	—	—
303 L3	8.661	15.748	8.661	15.748	—	—	—	—

(*): for NPC versions contact Bonfiglioli Technical Service
NOTE: for R design contact Bonfiglioli Technical Service
for PF N400TC contact Bonfiglioli Technical Service

	L		lbs	
	NPC	NHC	NPC	NHC
303 L1	6.50	5.91	88.2	77.2
303 L2	8.58	7.99	97.0	86.0
303 L3	10.67	10.08	105.8	94.8
303 L4	12.76	12.17	114.7	103.6

	V	V1	lbs	V	V1	lbs	V	V1	lbs	C	Input
303 L1	9.681	1.875	33.1	—	—	—	11.138	1.875	38.0	1.457	A
303 L2	5.996	1.125	13.2	6.437	1.625	15.4	—	—	—	1.457	A
303 L3	5.996	1.125	13.2	6.437	1.625	15.4	—	—	—	1.457	A
303 L4	5.996	1.125	13.2	6.437	1.625	15.4	—	—	—	1.457	A

	N56C		N140TC		N180TC		N210TC		N250TC		N280TC	
	E	P	E	P	E	P	E	P	E	P	E	P
303 L1	—	—	—	—	—	—	—	—	5.22	11.81	6.22	13.78
303 L2	4.51	6.70	4.51	6.70	5.22	8.82	5.22	8.82	5.22	8.82	6.12	11.81
303 L3	4.51	6.70	4.51	6.70	5.22	8.82	5.22	8.82	5.22	8.82	6.12	11.81
303 L4	4.51	6.70	4.51	6.70	5.22	8.82	5.22	8.82	5.22	8.82	6.12	11.81

	S1 + M1			S2 + ME2S			S3 + ME3S			S3 + ME3L			S4 + ME4/MX4			S5 + ME5S/MX5S			S5 + ME5L/MX5L		
	X1	X2	Y1	X1	X2	Y1	X1	X2	Y1	X1	X2	Y1	X1	X2	Y1	X1	X2	Y1	X1	X2	Y1
303 L1	—	—	—	—	—	—	—	—	—	—	—	—	18.11	—	10.16	21.73		12.20	23.46	—	12.20
303 L2	9.96	12.36	5.43	11.02	—	6.14	12.80	—	7.68	14.06	—	7.68	18.11	—	10.16	—	—	—	—	—	—
303 L3	9.96	12.36	5.43	11.02	—	6.14	12.80	—	7.68	14.06	—	7.68	18.11	—	10.16	—	—	—	—	—	—
303 L4	9.96	12.36	5.43	11.02	—	6.14	12.80	—	7.68	14.06	—	7.68	18.11	—	10.16	—	—	—	—	—	—

303 R

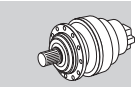

Imperial

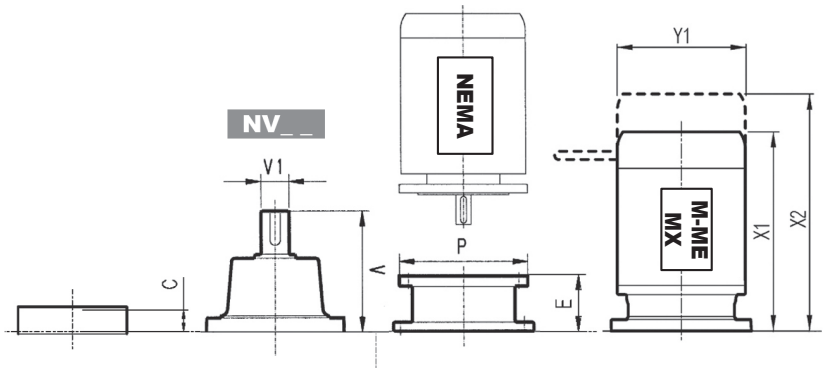

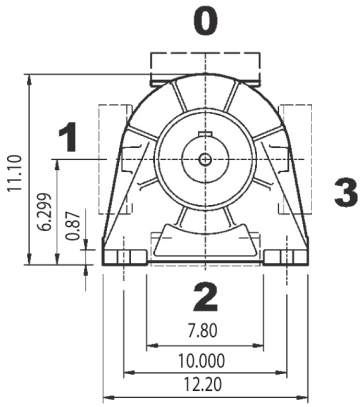

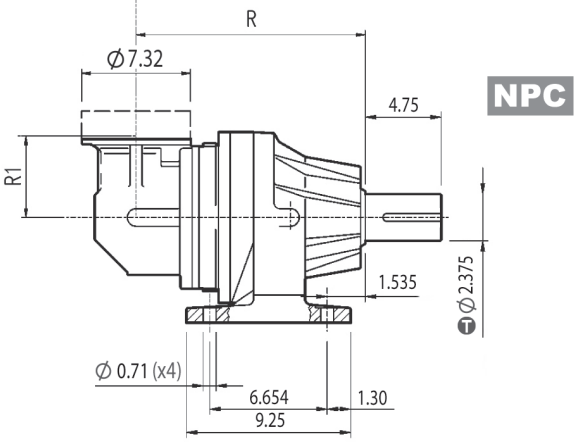

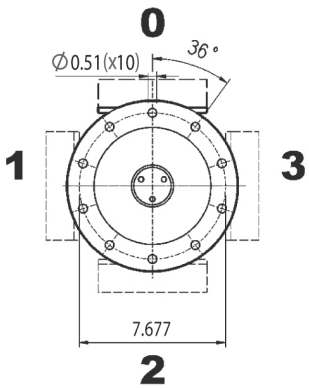

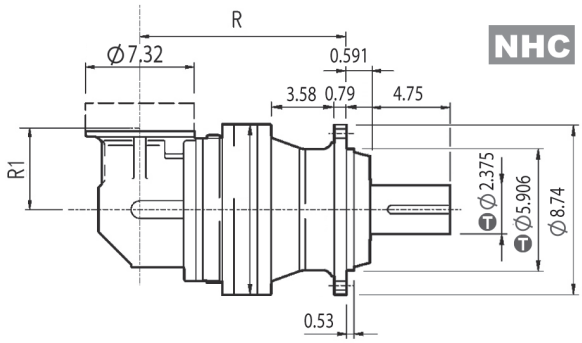

inch	T
5.906	-0.00169 -0.00327
2.375	0 -0.00075

Dimensions are in Inch except when shown in *italic [mm]*

	R		R1	lbs	
	NPC	NHC		NPC	NHC
303 R2	10.12	9.53	5.51	132.3	121.3
303 R3	12.20	11.61	4.80	127.9	116.9
303 R4	14.29	13.70	4.80	136.7	125.7

	V	V1	lbs	V	V1	lbs	C	Input
303 R2	5.996	1.125	13.2	6.437	1.625	15.4	1.457	A
303 R3	5.996	1.125	13.2	6.437	1.625	15.4	1.457	A
303 R4	5.996	1.125	13.2	6.437	1.625	15.4	1.457	A

	N56C		N140TC		N180TC		N210TC		N250TC		N280TC	
	E	P	E	P	E	P	E	P	E	P	E	P
303 R2	4.51	6.70	4.51	6.70	5.22	8.82	5.22	8.82	5.22	8.82	6.12	11.81
303 R3	4.51	6.70	4.51	6.70	5.22	8.82	5.22	8.82	5.22	8.82	6.12	11.81
303 R4	4.51	6.70	4.51	6.70	5.22	8.82	5.22	8.82	5.22	8.82	6.12	11.81

	S1 + M1			S2 + ME2S			S3 + ME3S			S3 + ME3L			S4 + ME4/MX4		
	X1	X2	Y1	X1	X2	Y1	X1	X2	Y1	X1	X2	Y1	X1	X2	Y1
303 R2	—	—	—	12.91	—	6.14	14.68	—	7.68	15.94	—	7.68	20	—	10.16
303 R3	9.96	12.36	5.43	12.91	—	6.14	14.68	—	7.68	15.94	—	7.68	—	—	—
303 R4	9.96	12.36	5.43	12.91	—	6.14	14.68	—	7.68	15.94	—	7.68	—	—	—

Bonfiglioli Riduttori

3/V 03 L3

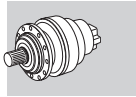

Metric

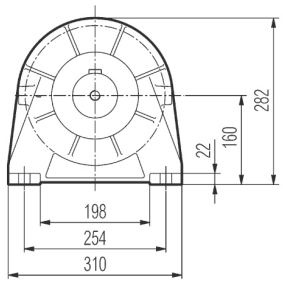

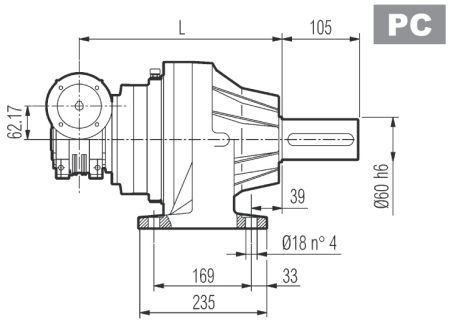

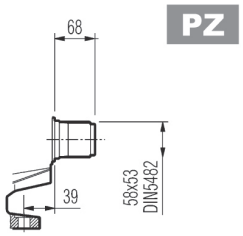

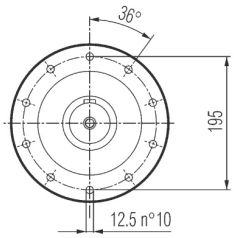

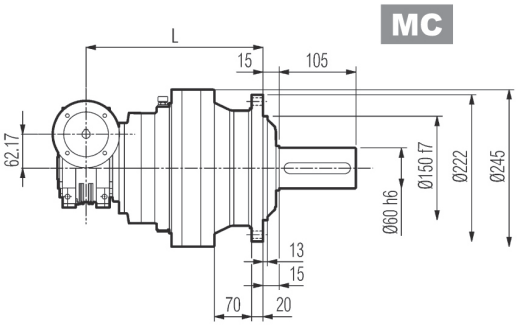

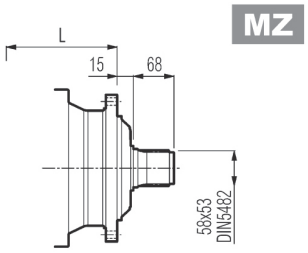

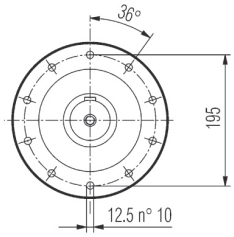

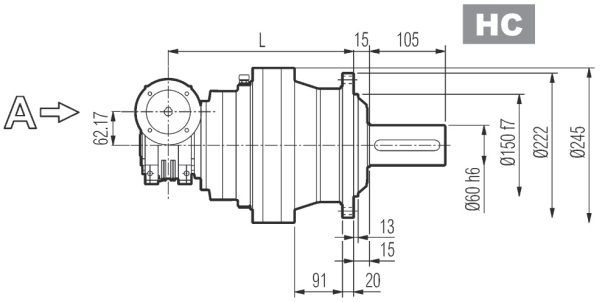

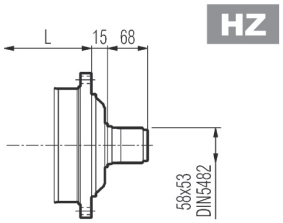

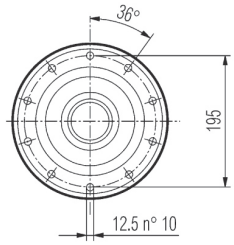

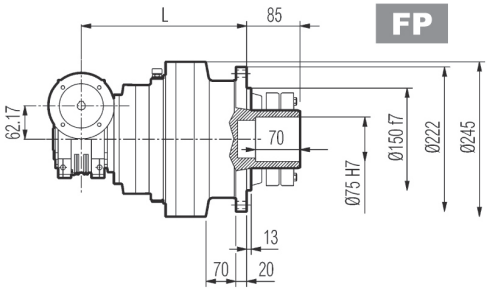

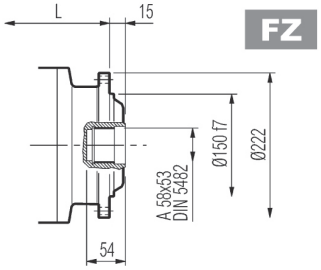

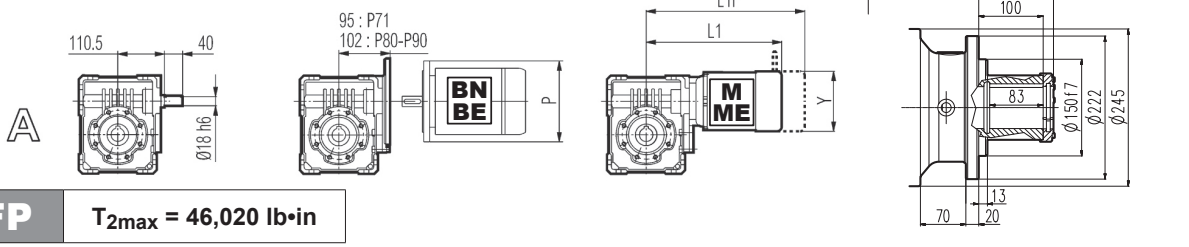

FP | **T_{2max} = 46,020 lb•in**

Dimensions are in mm

	L				Kg			
	MC - MZ	**PC - PZ**	**HC - HZ**	**FP - FZ - FDK**	**MC - MZ**	**PC - PZ**	**HC - HZ**	**FP - FZ - FDK**
3/V 03 L3	270	330	315	270	43	51	45	41

	P71	P80	P90	S1 + M1			S2 + ME2S		
	P	**P**	**P**	**L1**	**L1f**	**Y**	**L1**	**L1f**	**Y**
3/V 03 L3	160	200	200	289	350	138	317	—	156

3/V 03 L3

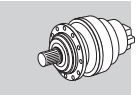

Imperial

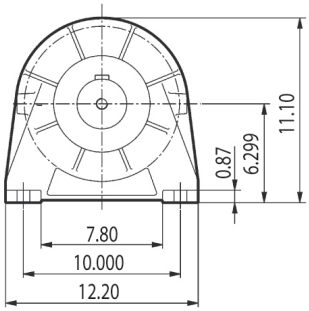

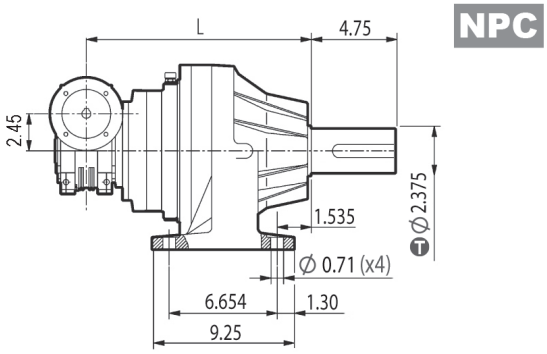

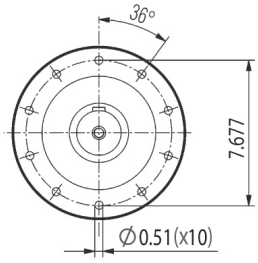

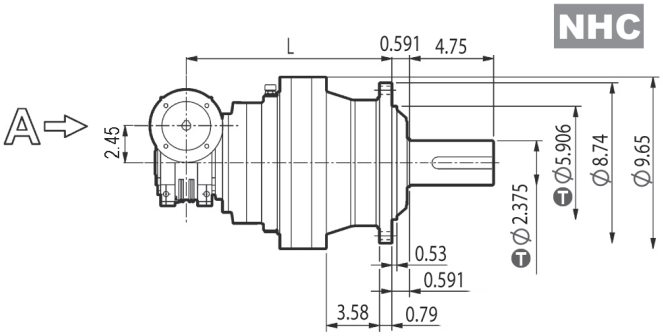

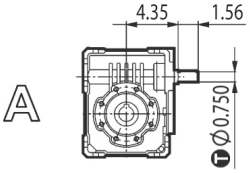

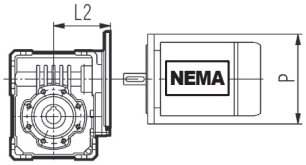

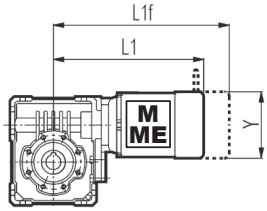

inch	T
5.906	-0.00169 -0.00327
2.375	0 -0.00075
0.750	0 -0.00051

Dimensions are in Inch except when shown in *italic [mm]*

	L		lbs		N56C	N140TC	S1 + M1			S2 + ME2S		
	NPC	NHC	NPC	NHC	P	P	L1	L1f	Y	L1	L1f	Y
3/V 03 L3	12.99	12.40	112.5	99.2	6.54	6.54	11.38	13.78	5.43	12.48	—	6.14

Bonfiglioli Riduttori

3/A 03 L2

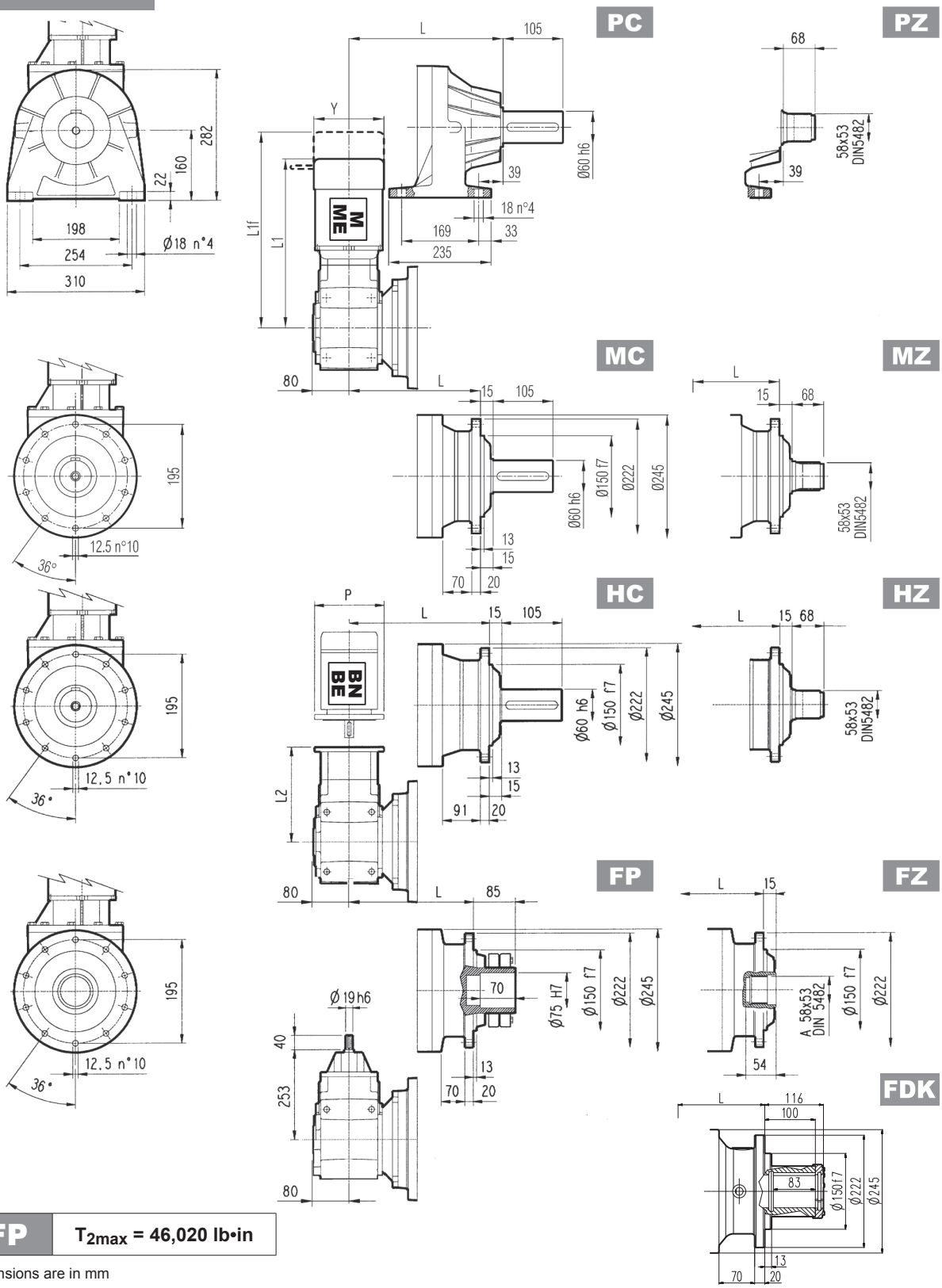

FP	T_{2max} = 46,020 lb•in

Dimensions are in mm

	L				Kg			
	MC - MZ	PC - PZ	HC - HZ	FP - FZ - FDK	MC - MZ	PC - PZ	HC - HZ	FP - FZ - FDK
3/A 03 L2	225	285	270	225	63	71	65	60

	P63		P71		P80		P90		P100		P112		S1 + M1			S2 + ME2S			S3 + ME3S			S3 + ME3L		
	L2	P	L2	P	L2	P	L2	P	L2	P	L2	P	L1	L1f	Y	L1	L1f	Y	L1	L1f	Y	L1	L1f	Y
3/A 03 L2	243	140	243	160	262	200	262	200	272	250	272	250	399	416	138	425	—	156	470	—	195	501	—	195

3/A 03 L2

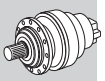

Imperial

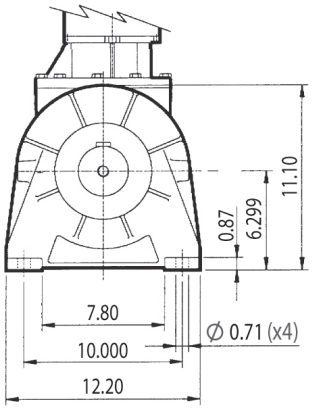

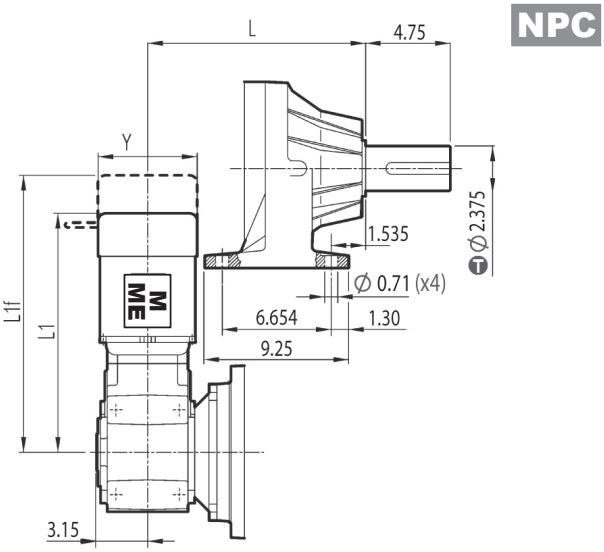

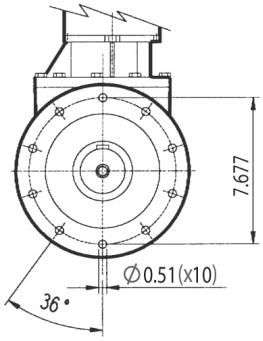

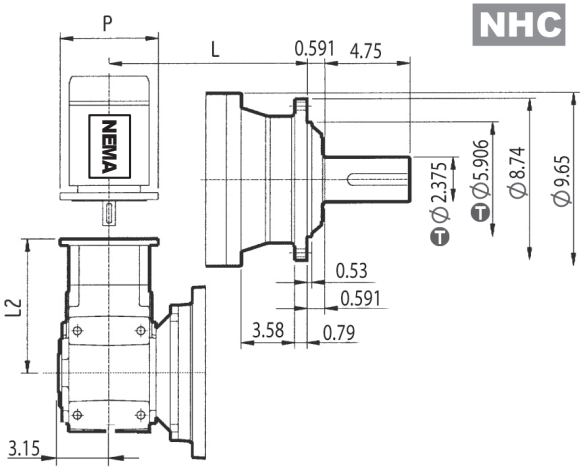

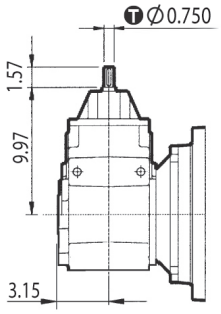

inch	T
5.906	-0.00169 -0.00327
2.375	0 -0.00075
0.750	0 -0.00051

Dimensions are in Inch except when shown in *italic [mm]*

	L		lbs	
	NPC	NHC	NPC	NHC
3/A 03 L2	11.22	10.63	156.5	143.3

	N56C		N140TC		N180TC		S1 + M1			S2 + ME2S			S3 + ME3S			S3 + ME3L		
	L2	P	L2	P	L2	P	L1	L1f	Y	L1	L1f	Y	L1	L1f	Y	L1	L1f	Y
3/A 03 L2	10.35	6.50	10.35	6.50	11.10	8.98	15.70	16.38	5.43	16.73	—	6.14	18.50	—	7.68	19.72	—	7.68

Bonfiglioli Riduttori

303 L | 303 R | 3/V 03 L3 | 3/A 03 L2

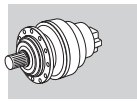

Metric

Imperial

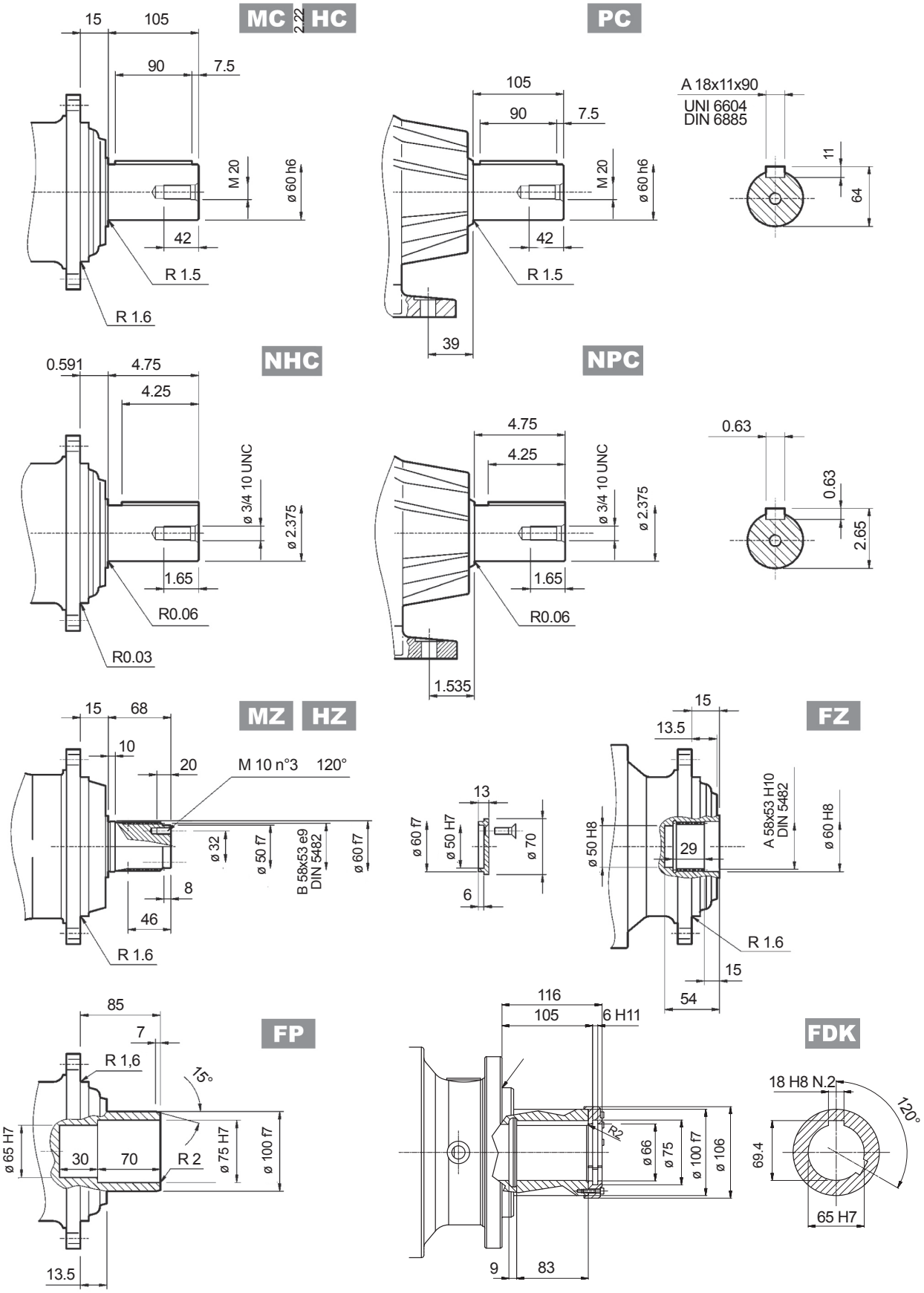

FP	T_{2max} = 46,020 lb•in

Dimensions are in mm when shown in italic, otherwise dimensions are in inches

inch	T
2.375	0 / -0.00075

Flange

W0A

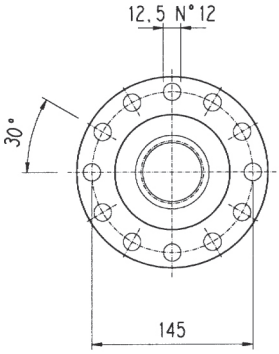

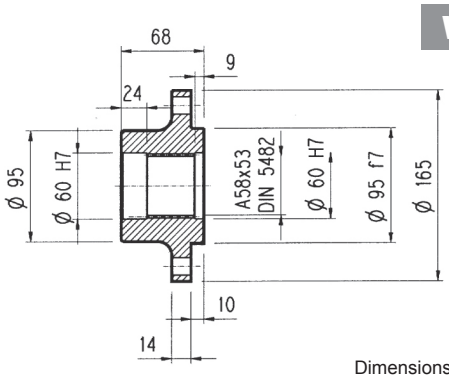

Material: Steel C40

Dimensions are in mm

Pinions

P...

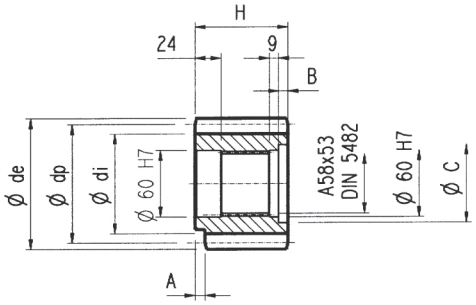

α = 20°

Dimensions are in mm

	m	z	x	dp	di	de	H	A	B	C	Material
PCL1	5	19	—	95	82	104	77	12	9	72	Steel 39NiCrMo3 hardened and tempered
PCL2	5	19	—	95	82	104	68	—	—	—	
PCM	5	20	—	100	87.5	110	68	18	—	—	Steel 18NiCrMo5 case hardened
PCP	5	22	—	110	97.5	120	68	18	—	—	
PDE	6	14	0.500	84	75	99.6	68	—	—	—	Steel 39NiCrMo3 hardened and tempered
PDI	6	18	0.500	108	99	123.6	68	—	—	—	
PDM	6	20	0.833	120	115	140	68	—	—	—	
PFD	8	13	0.675	104	95	127.6	68	—	—	—	Steel 18NiCrMo5 case hardened
PFE1	8	14	—	112	92	126	68	—	—	—	
PFE2	8	14	—	112	92	126	80	—	12	72	
PFF	8	15	—	120	100	136	68	—	—	—	Steel 39NiCrMo3 hardened and tempered
PFP	8	22	—	176	156	190	77	12	10	71	
PHG	10	16	0.500	160	145	188	75	—	7	72	

Sleeve coupling

M0A

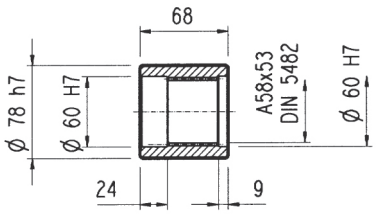

Material: Steel 16CrNi4

Dimensions are in mm

Splined bars

B0A

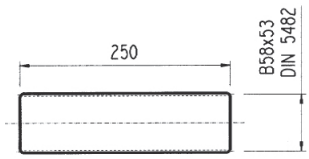

Material: Case hardening steel 18NiCrMo5 UNI 5331
must be case hardened 50-55 HRC

Shrink disc

G0A

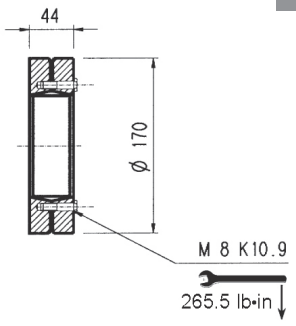

Dimensions are in mm

303 L 303 R

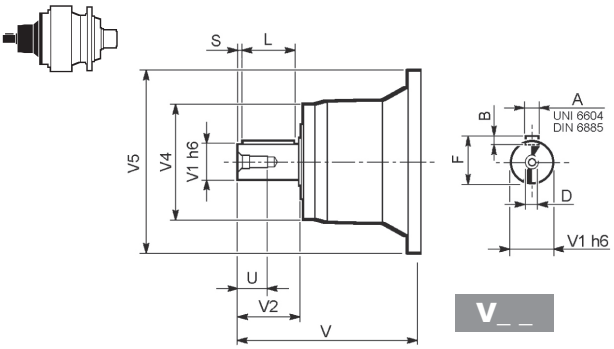

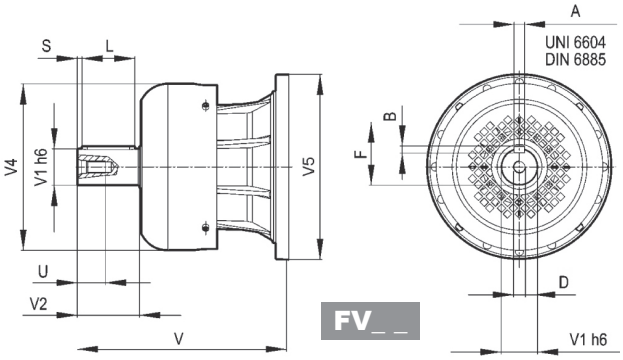

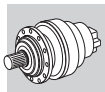

Metric

Dimensions are in mm

		V	V1	V2	V4	V5	A	B	F	L	S	D	U
303 L1	**V05B**	239	48	82	155	245	14	9	51.5	70	6	M16	36
	FV05B	276	48	82	219.5	244	14	9	51.5	70	6	M16	36
303 L2	**V01A**	137.5	24	36	120	186	8	7	27	30	3	M8	19
	V01B	158	38	58	120	186	10	8	41	50	4	M12	28
303 L3	**V01A**	137.5	24	36	120	186	8	7	27	30	3	M8	19
	V01B	158	38	58	120	186	10	8	41	50	4	M12	28
303 L4	**V01A**	137.5	24	36	120	186	8	7	27	30	3	M8	19
	V01B	158	38	58	120	186	10	8	41	50	4	M12	28
303 R2-R3-R4	**V01A**	137.5	24	36	120	186	8	7	27	30	3	M8	19
	V01B	158	38	58	120	186	10	8	41	50	4	M12	28

303 L 303 R

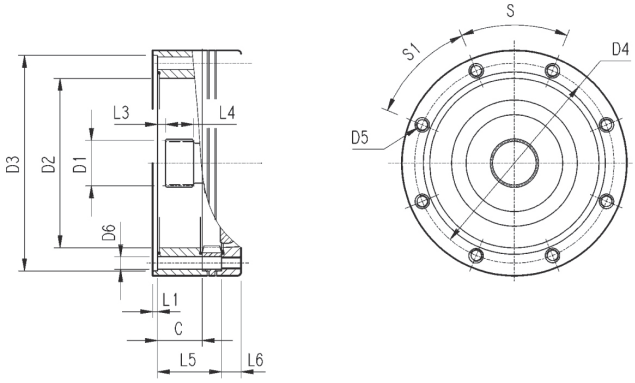

Dimensions are in mm

		C	D1	D2	D3	D4	D5	D6	L1	L2	L3	L4	L5	L6	S	S1	Input
303 L1	**V9AA**	37	40x36 DIN5482	140	178 H7	165	M10 n°8	11	4	—	9	18	—	18	45°	45°	A
303 L2	**V9AA**	37	40x36 DIN5482	140	178 H7	165	M10 n°8	11	4	—	9	18	53	18	45°	45°	A
303 L3	**V9AA**	37	40x36 DIN5482	140	178 H7	165	M10 n°8	11	4	—	9	18	106	18	45°	45°	A
303 L4	**V9AA**	37	40x36 DIN5482	140	178 H7	165	M10 n°8	11	4	—	9	18	159	18	45°	45°	A
303 R2-R3-R4	**V9AA**	37	40x36 DIN5482	140	178 H7	165	M10 n°8	11	4	—	9	18	37	18	45°	45°	A

3/V 03 L3

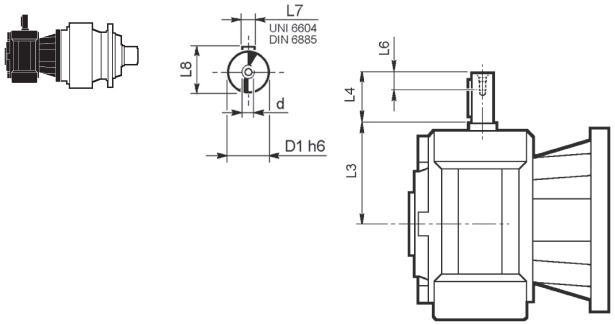

Dimensions are in mm

	D1 h6	L3	L4	L6	L7	L8	d
3/V 03 L3_HS	18	110.5	40	16	6	20.5	M6

3/A 03 L2

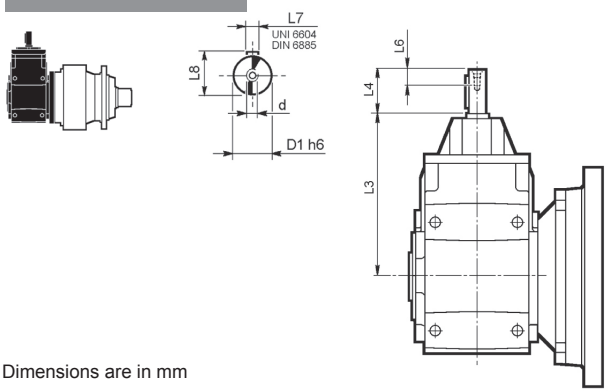

Dimensions are in mm

	D1 h6	L3	L4	L6	L7	L8	d
3/A 03 L2_HS	19	252.5	40	16	6	21.5	M6

303 L 303 R

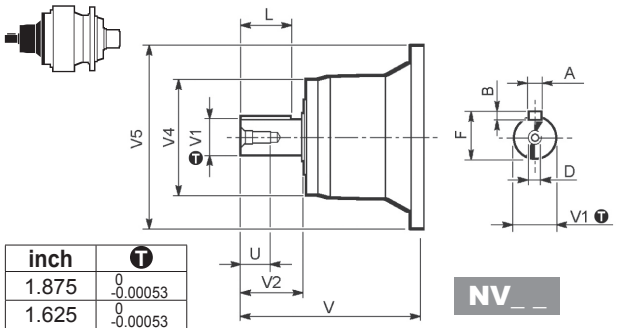

inch	T
1.875	0 -0.00053
1.625	0 -0.00053
1.125	0 -0.00051

NV_ _

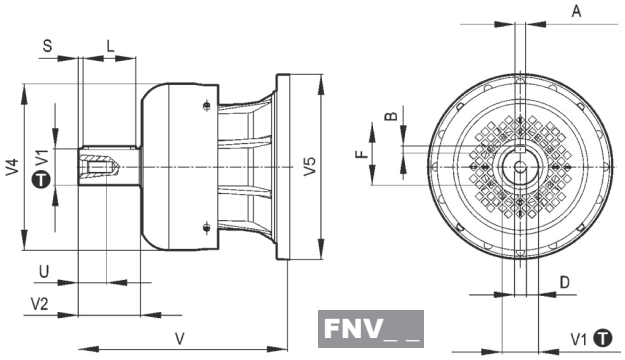

FNV_ _

Dimensions are in Inch except when shown in *italic [mm]*

		V	V1	V2	V4	V5	A	B	F	L	D	U
303 L1	**NV05B**	9.681	1.875	3.500	6.417	9.606	0.500	0.500	2.091	3.000	5/8-11 UNC	1.417
	FNV05B	11.138	1.875	3.500	8.641	9.606	0.500	0.500	2.091	3.000	5/8-11 UNC	1.417
303 L2	**NV01A**	5.996	1.125	2.000	4.980	7.323	0.250	0.250	1.236	1.752	3/8-16 UNC	0.866
	NV01B	6.437	1.625	2.500	4.980	7.323	0.375	0.375	1.791	2.000	1/2-13 UNC	1.102
303 L3	**NV01A**	5.996	1.125	2.000	4.980	7.323	0.250	0.250	1.236	1.752	3/8-16 UNC	0.866
	NV01B	6.437	1.625	2.500	4.980	7.323	0.375	0.375	1.791	2.000	1/2-13 UNC	1.102
303 L4	**NV01A**	5.996	1.125	2.000	4.980	7.323	0.250	0.250	1.236	1.752	3/8-16 UNC	0.866
	NV01B	6.437	1.625	2.500	4.980	7.323	0.375	0.375	1.791	2.000	1/2-13 UNC	1.102
303 R2-R3-R4	**NV01A**	5.996	1.125	2.000	4.980	7.323	0.250	0.250	1.236	1.752	3/8-16 UNC	0.866
	NV01B	6.437	1.625	2.500	4.980	7.323	0.375	0.375	1.791	2.000	1/2-13 UNC	1.102

303 L 303 R

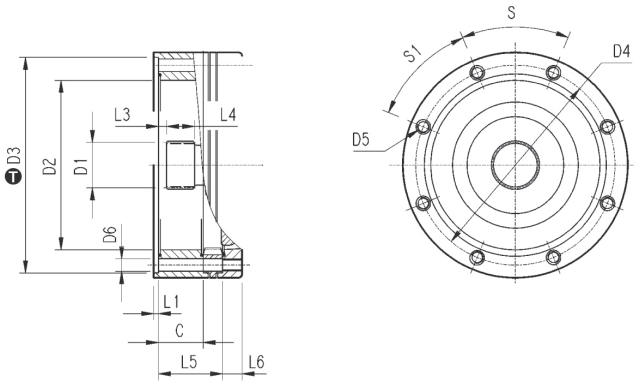

inch	T
7.01	+0.00157 0

Dimensions are in Inch except when shown in *italic [mm]*

		C	D1	D2	D3	D4	D5	D6	L1	L2	L3	L4	L5	L6	S	S1	Input
303 L1	**V9AA**	1.46	*40x36 DIN5482*	5.51	7.01	6.50	*M10 n°8*	0.43	0.16	—	0.35	0.71	—	0.71	45°	45°	A
303 L2	**V9AA**	1.46	*40x36 DIN5482*	5.51	7.01	6.50	*M10 n°8*	0.43	0.16	—	0.35	0.71	2.09	0.71	45°	45°	A
303 L3	**V9AA**	1.46	*40x36 DIN5482*	5.51	7.01	6.50	*M10 n°8*	0.43	0.16	—	0.35	0.71	4.17	0.71	45°	45°	A
303 L4	**V9AA**	1.46	*40x36 DIN5482*	5.51	7.01	6.50	*M10 n°8*	0.43	0.16	—	0.35	0.71	6.26	0.71	45°	45°	A
303 R2-R3-R4	**V9AA**	1.46	*40x36 DIN5482*	5.51	7.01	6.50	*M10 n°8*	0.43	0.16	—	0.35	0.71	1.46	0.71	45°	45°	A

3/V 03 L3

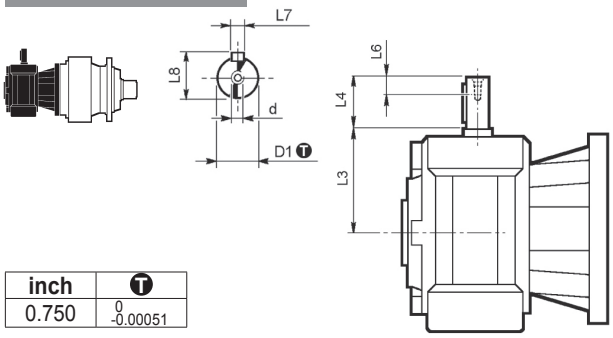

inch	T
0.750	0 -0.00051

Dimensions are in Inch except when shown in *italic [mm]*

	D1	L3	L4	L6	L7	L8	d
3/V 03 L3_NHS	0.750	4.35	1.575	0.63	0.188	0.832	1/4-20UNC

3/A 03 L2

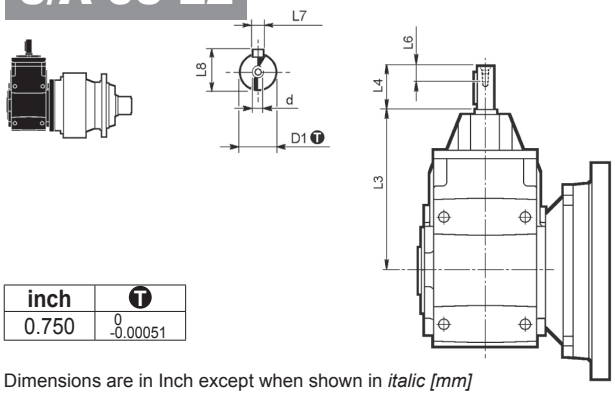

inch	T
0.750	0 -0.00051

Dimensions are in Inch except when shown in *italic [mm]*

	D1	L3	L4	L6	L7	L8	d
3/A 03 L2_NHS	0.750	9.97	1.575	0.63	0.188	0.832	1/4-20UNC

Permissible radial and axial loads on output shaft with $Fh_2 : n_2 \cdot h = 100000$

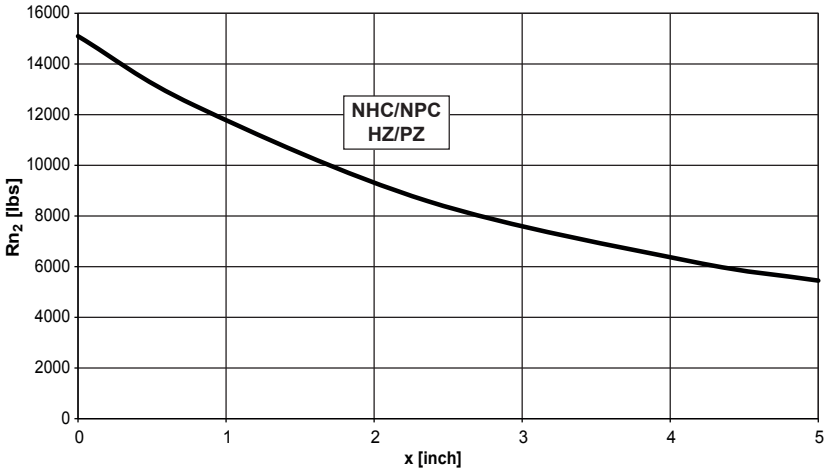

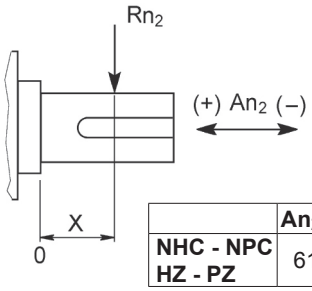

	An_2 (+)	An_2 (-)
NHC - NPC HZ - PZ	6182	4945

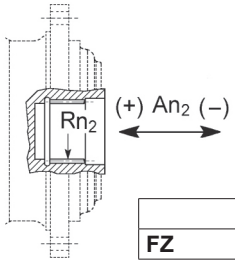

	Rn_2	An_2 (+/-)
FZ	2504	2609

Load corrective factor fh_2 on shafts	$Fh_2 = n_2 \cdot h$		10000	25000	50000	100000	500000	1000000
	fh_2	FZ	**2.15**	**1.59**	**1.26**	**1.00**	**0.58**	**0.46**
		NHC - NPC - HZ -PZ	**1.48**	**1.48**	**1.23**	**1.00**	**0.62**	**0.50**

Permissible radial loads on input shaft with $Fh_1 : n_1 \cdot h = 250000$

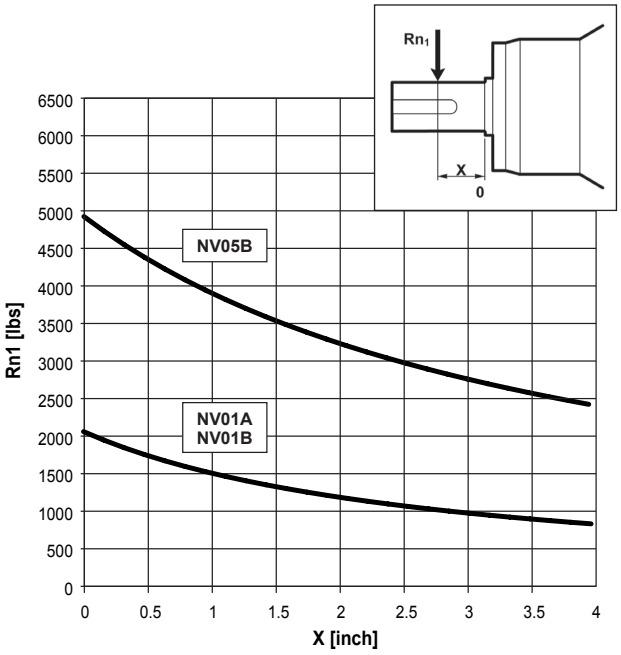

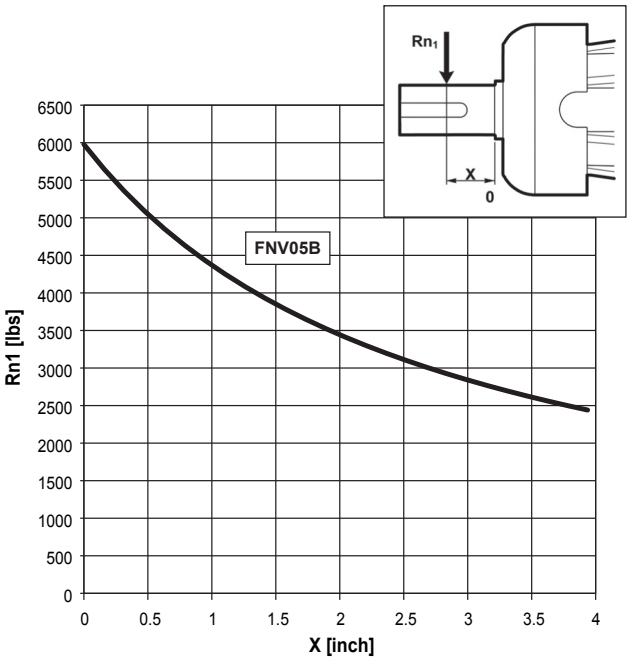

Load corrective factor fh_1 on shafts	$Fh_1 = n_1 \cdot h$	250000	500000	1000000	2000000	5000000	10000000
	fh_1	**1**	**0.79**	**0.63**	**0.50**	**0.37**	**0.29**

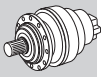

303 VK

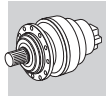

Metric

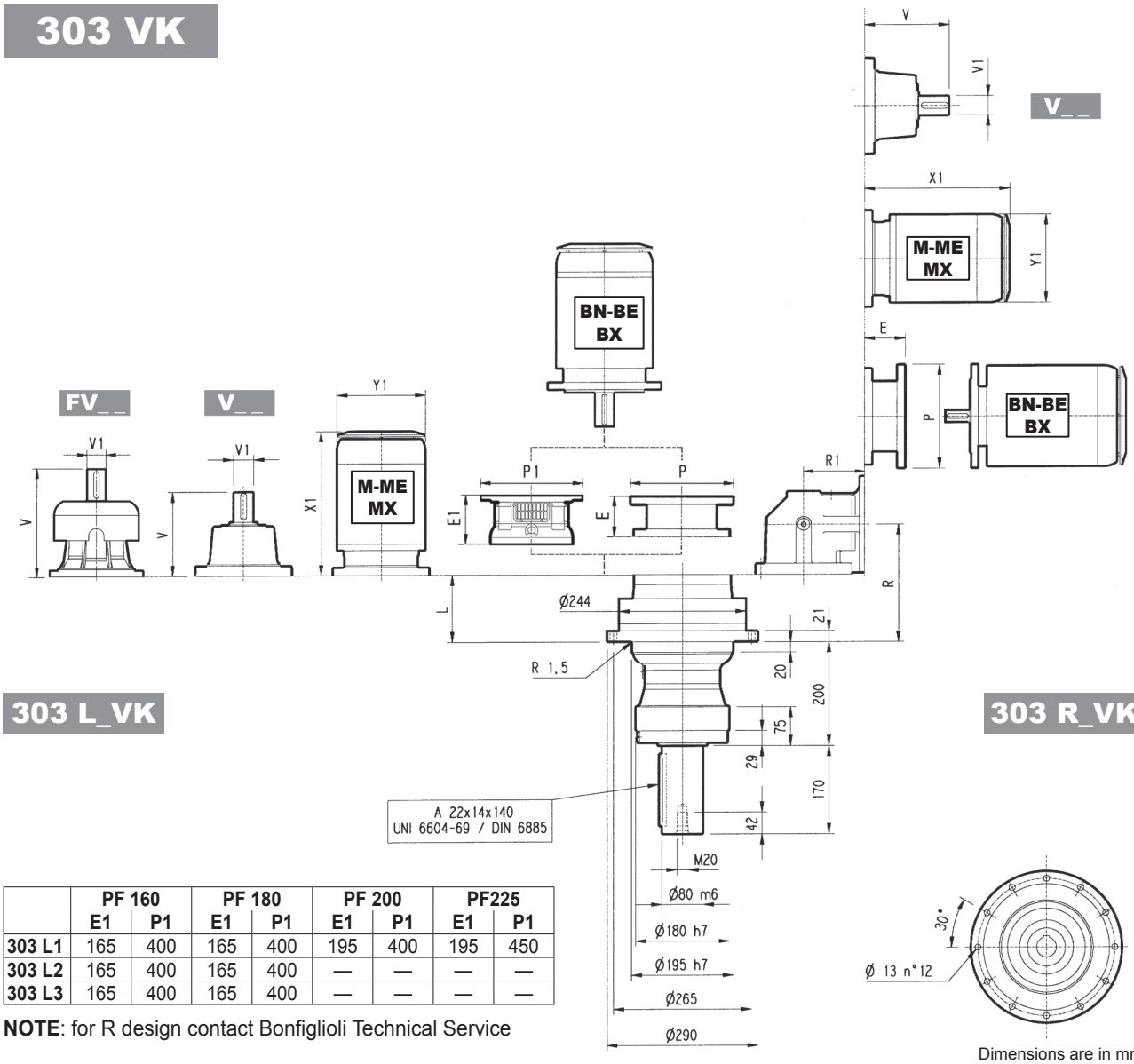

	PF 160		PF 180		PF 200		PF225	
	E1	P1	E1	P1	E1	P1	E1	P1
303 L1	165	400	165	400	195	400	195	450
303 L2	165	400	165	400	—	—	—	—
303 L3	165	400	165	400	—	—	—	—

NOTE: for R design contact Bonfiglioli Technical Service

Dimensions are in mm

	L	Kg	V	V1	Kg	V	V1	Kg	V	V1	Kg	V	V1	Kg	P71		P80		P90		P100		P112		P132		P160		P180		P200	
															E	P	E	P	E	P	E	P	E	P	E	P	E	P	E	P	E	P
303 L1	51	65	239	48	15	—	—	—	276	48	17	—	—	—	—	—	—	—	—	—	—	—	—	—	114	300	144	350	144	350	174	400
303 L2	104	70	137.5	24	6	158	38	7	—	—	—	—	—	—	65	160	84	200	84	200	94	250	94	250	114	300	144	350	—	—	—	—
303 L3	157	73	137.5	24	6	158	38	7	—	—	—	—	—	—	65	160	84	200	84	200	94	250	94	250	114	300	144	350	—	—	—	—
303 L4	210	77	137.5	24	6	158	38	7	—	—	—	—	—	—	65	160	84	200	84	200	94	250	94	250	114	300	144	350	—	—	—	—

	S1 + M1			S2 + ME2S			S3 + ME3S			S3 + ME3L			S4 + ME4/MX4			S5 + ME5S/MX5S			S5 + ME5L/MX5L		
	X1	X2	Y1	X1	X2	Y1	X1	X2	Y1	X1	X2	Y1	X1	X2	Y1	X1	X2	Y1	X1	X2	Y1
303 L1	—	—	—	—	—	—	—	—	—	—	—	—	460	—	258	552	—	310	596	—	310
303 L2	253	314	138	280	—	156	325	—	195	357	—	195	460	—	258	—	—	—	—	—	—
303 L3	253	314	138	280	—	156	325	—	195	357	—	195	460	—	258	—	—	—	—	—	—
303 L4	253	314	138	280	—	156	325	—	195	357	—	195	460	—	258	—	—	—	—	—	—

	R	R1	Kg	V	V1	Kg	V	V1	Kg	P71		P80		P90		P100		P112		P132	
										E	P	E	P	E	P	E	P	E	P	E	P
303 R2	143	140	85	137.5	24	6	158	38	7	65	160	84	200	84	200	94	250	94	250	114	300
303 R3	196	122	83	137.5	24	6	158	38	7	65	160	84	200	84	200	94	250	94	250	114	300
303 R4	249	122	87	137.5	24	6	158	38	7	65	160	84	200	84	200	94	250	94	250	114	300

	S1 + M1			S2 + ME2S			S3 + ME3S			S3 + ME3L			S4 + ME4/MX4		
	X1	X2	Y1	X1	X2	Y1	X1	X2	Y1	X1	X2	Y1	X1	X2	Y1
303 R2	—	—	—	328	—	156	373	—	195	405	—	195	508	—	258
303 R3	253	314	138	328	—	156	373	—	195	405	—	195	—	—	—
303 R4	253	314	138	328	—	156	373	—	195	405	—	195	—	—	—

303 VK

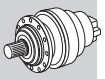

Metric

The diagram below allows the calculation of permitted overhung load R_{x2} on the output shaft of gearbox, with radial force applying at a distance x from shaft shoulder.
The curves are relevant to value resulting from the relationship of trust load A_{n2} to radial load R_{n2}, based on n_2 = 10 rpm and 10000 hrs theoretical lifetime.

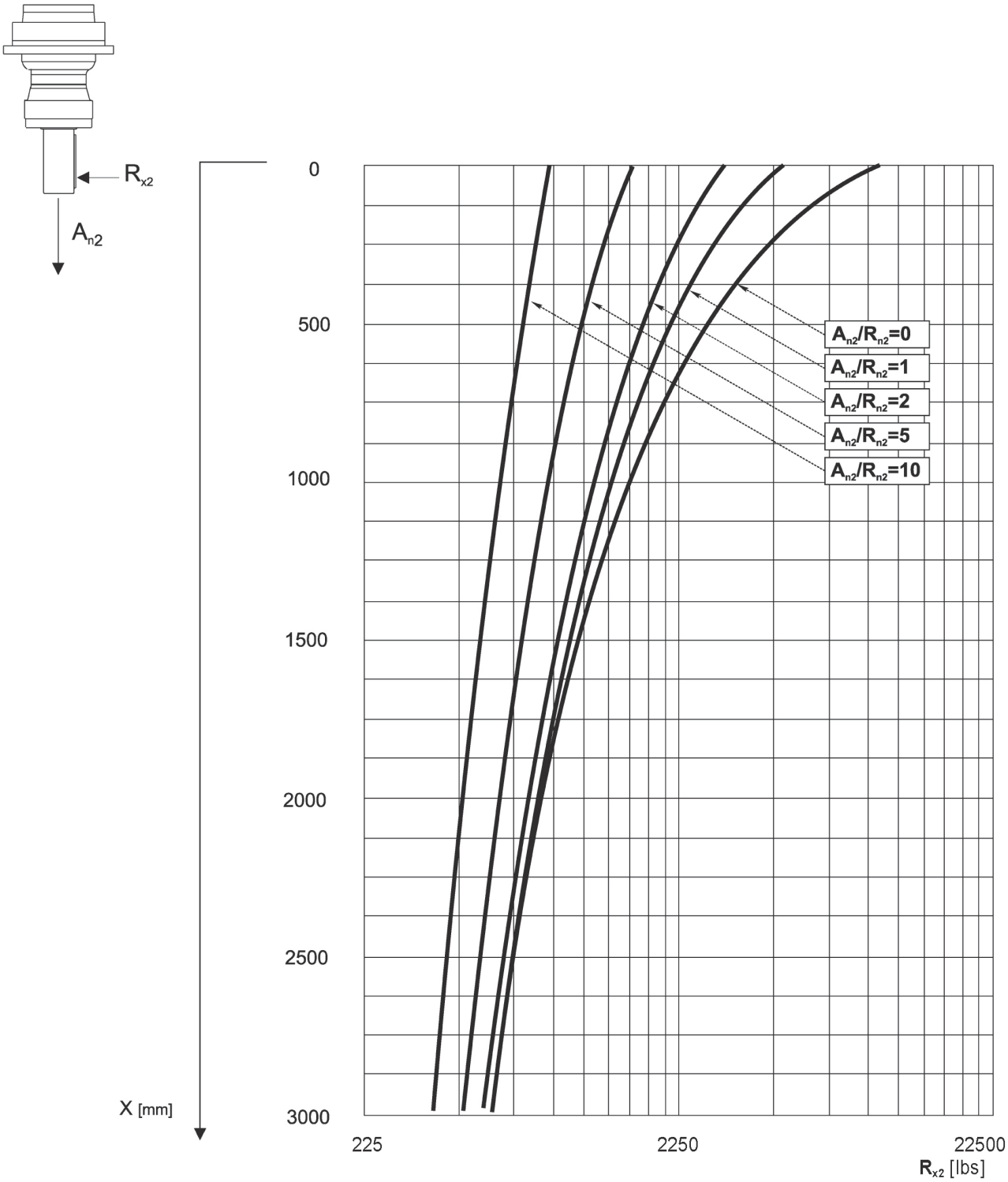

304 L

	Hydraulic motor										
	MG							542			Kg
cm³	050	080	100	125	160	200	250				
	M1							M2	M3	M4	
304 L1	—	—	—	—	203	210	219	135	77	1/4G	20
304 L2	162	167	171	175	181	188	—	113	60	1/4G	14

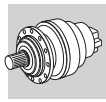

Metric

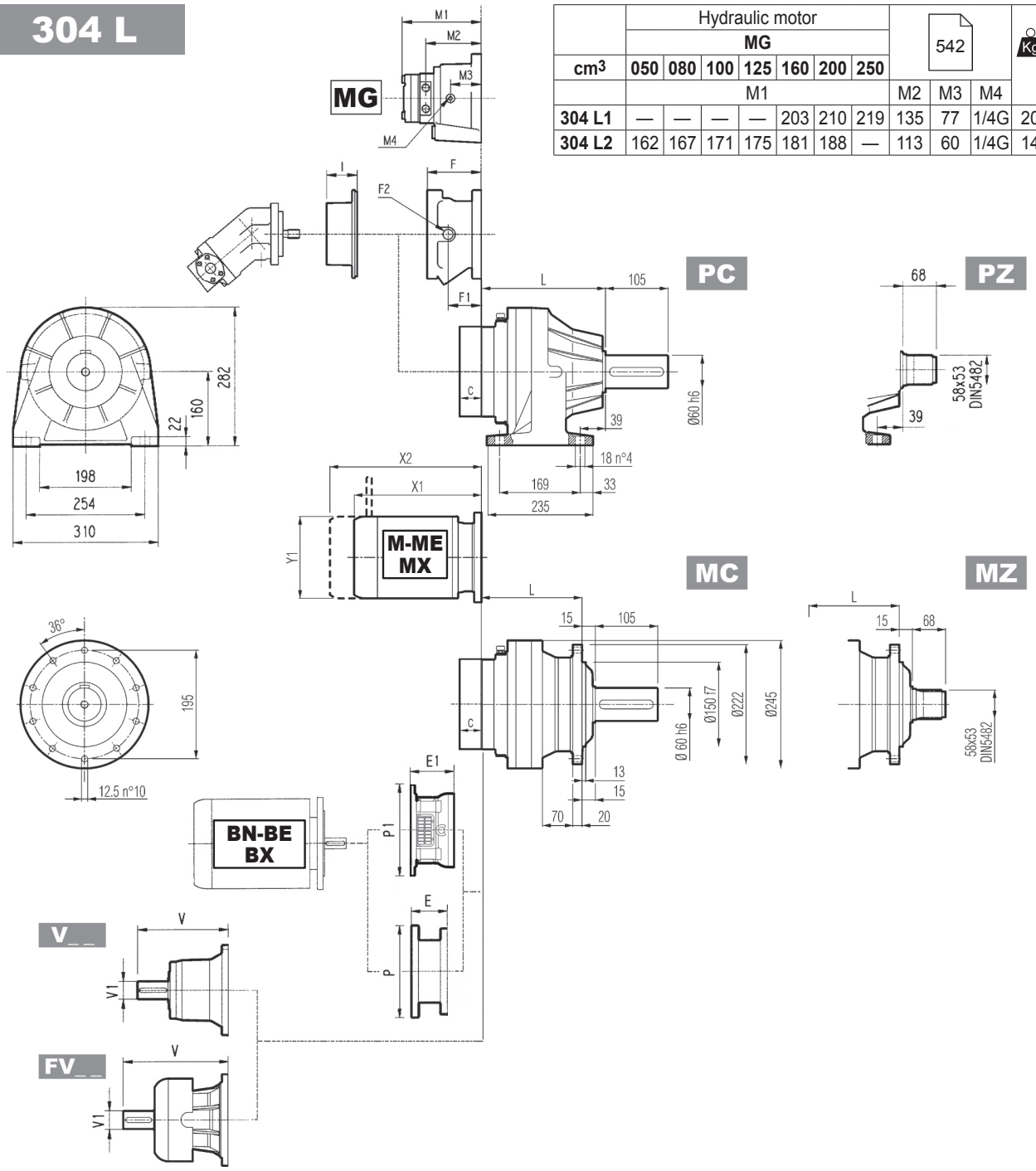

Dimensions are in mm

	L				Kg			
	MC - MZ	PC - PZ	HC - HZ	FP - FZ - FDK	MC - MZ	PC - PZ	HC - HZ	FP - FZ - FDK
304 L1	125	165	150	125	31	40	35	31
304 L2	190	230	215	190	38	47	42	38
304 L3	243	283	268	243	42	51	46	42
304 L4	296	336	321	296	46	55	50	46

	V	V1	Kg	V	V1	Kg	V	V1	Kg	C	Input	I	F	F1	F2	Type	Input	Kg
304 L1	239	48	15	—	—	—	276	48	17	37	A		145	95	1/4 G	5	A	16
304 L2	137.5	24	6	158	38	7	—	—	—	37	A		105	65	1/4 G	4	A	10
304 L3	137.5	24	6	158	38	7	—	—	—	37	A		105	65	1/4 G	4	A	10
304 L4	137.5	24	6	158	38	7	—	—	—	37	A	532	105	65	1/4 G	4	A	10

304 L

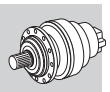

Metric

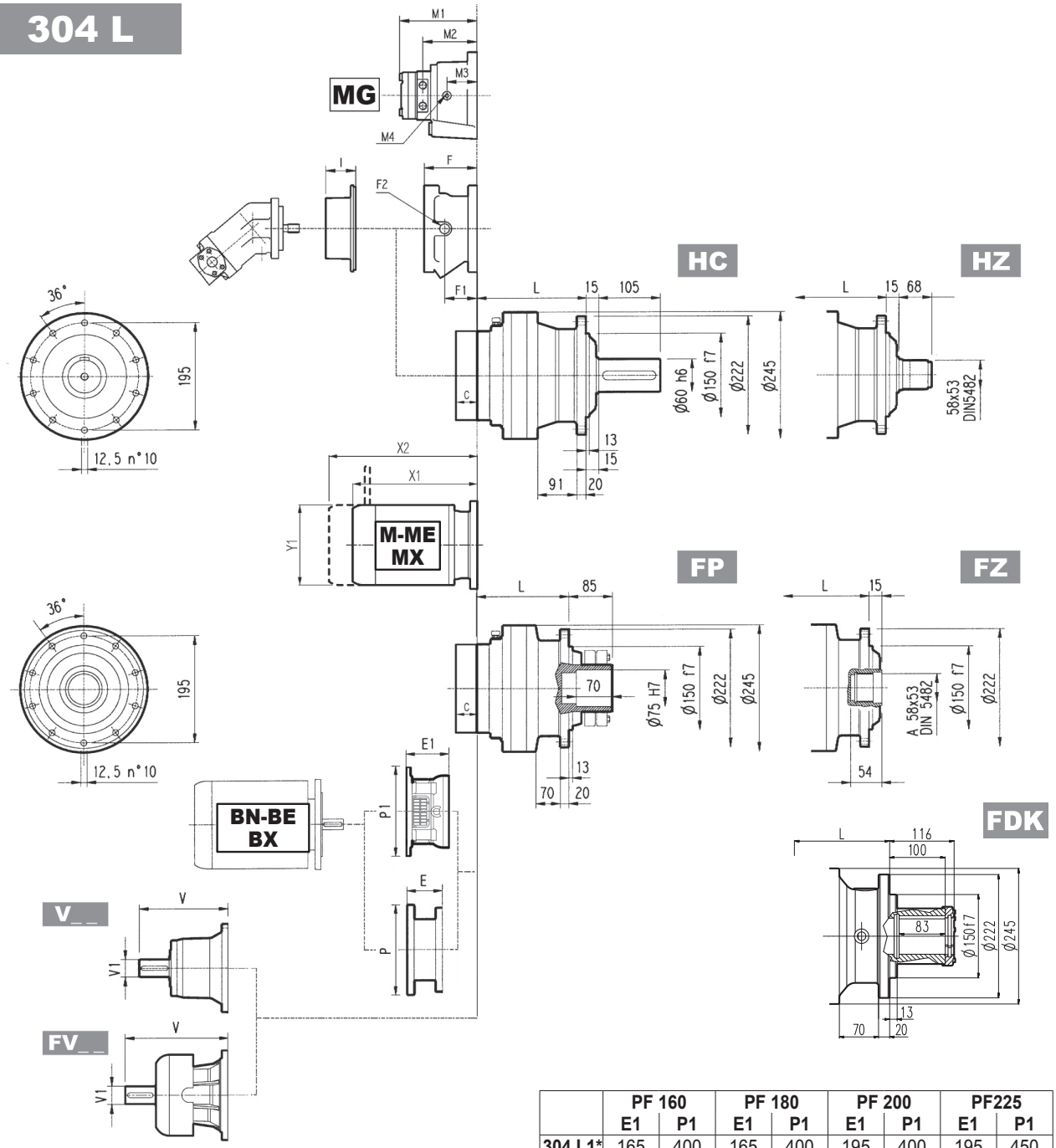

	PF 160		PF 180		PF 200		PF225	
	E1	P1	E1	P1	E1	P1	E1	P1
304 L1*	165	400	165	400	195	400	195	450
304 L2	165	400	165	400	—	—	—	—
304 L3	165	400	165	400	—	—	—	—

(*): for PC-PZ versions contact Bonfiglioli technical service
NOTE: For R design contact Bonfiglioli Technical service

FP | **T_{2max} = 64,600 lb•in**

Dimensions are in mm

	P71		P80		P90		P100		P112		P132		P160		P180		P200	
	E	P	E	P	E	P	E	P	E	P	E	P	E	P	E	P	E	P
304 L1	—	—	—	—	—	—	—	—	—	—	114	300	144	350	144	350	174	400
304 L2	65	160	84	200	84	200	94	250	94	250	114	300	144	350	—	—	—	—
304 L3	65	160	84	200	84	200	94	250	94	250	114	300	144	350	—	—	—	—
304 L4	65	160	84	200	84	200	94	250	94	250	114	300	144	350	—	—	—	—

	S1 + M1			S2 + ME2S			S3 + ME3S			S3 + ME3L			S4 + ME4/MX4			S5 + ME5S/MX5S			S5 + ME5L/MX5L		
	X1	X2	Y1	X1	X2	Y1	X1	X2	Y1	X1	X2	Y1	X1	X2	Y1	X1	X2	Y1	X1	X2	Y1
304 L1	—	—	—	—	—	—	—	—	—	—	—	—	460	—	258	552	—	310	596	—	310
304 L2	253	314	138	280	—	156	325	—	195	357	—	195	460	—	258	—	—	—	—	—	—
304 L3	253	314	138	280	—	156	325	—	195	357	—	195	460	—	258	—	—	—	—	—	—
304 L4	253	314	138	280	—	156	325	—	195	357	—	195	460	—	258	—	—	—	—	—	—

304 R

	Hydraulic motor										
	MG							542			Kg
cm³	050	080	100	125	160	200	250				
	M1							M2	M3	M4	
304 R2	162	167	171	175	181	188	—	113	60	1/4G	14

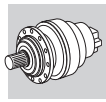

Metric

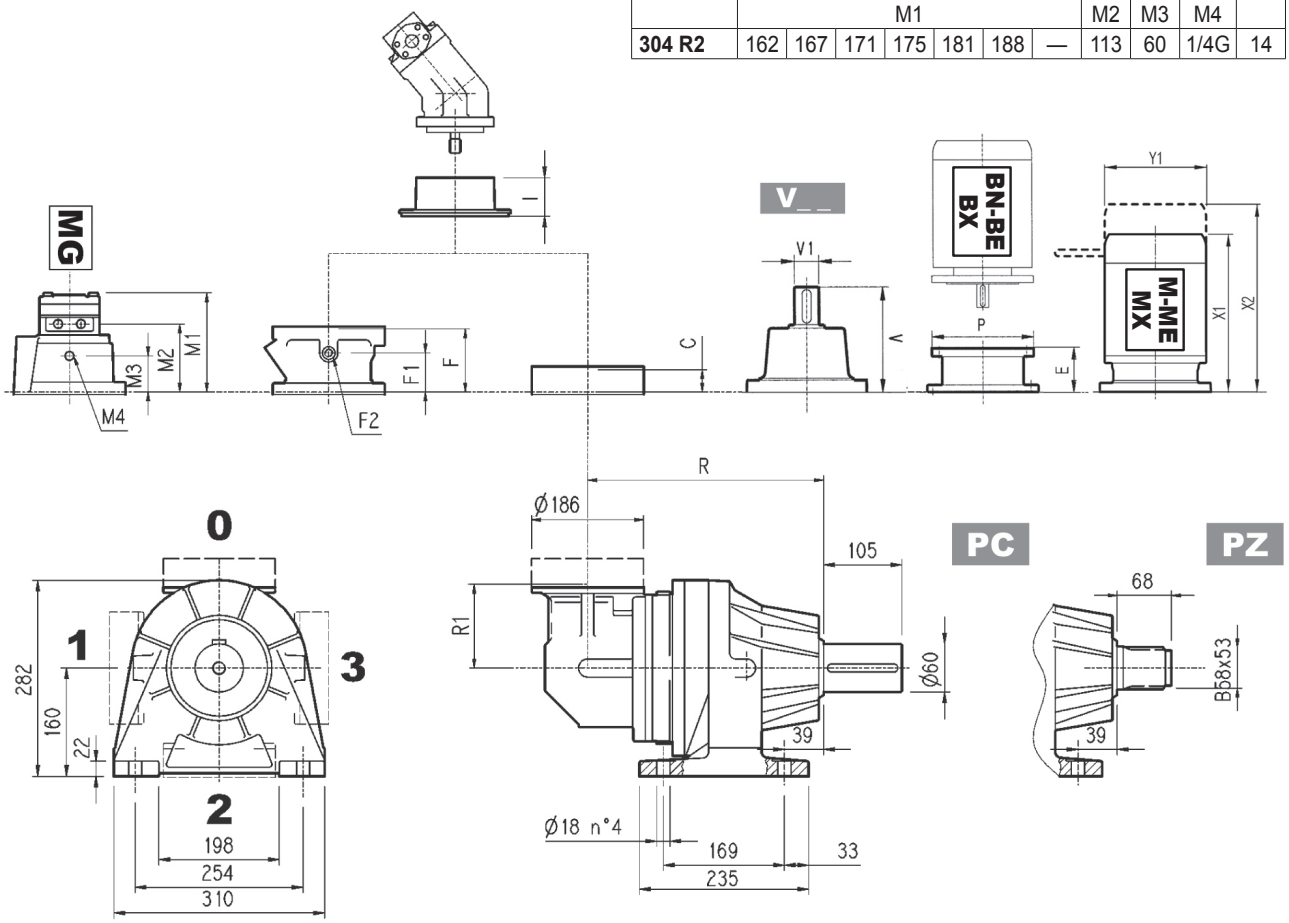

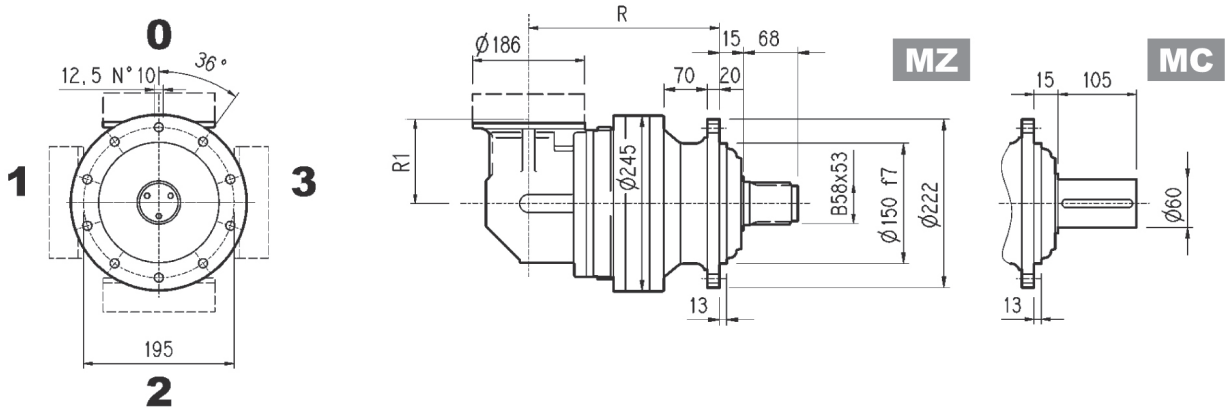

Dimensions are in mm

	R				R1	Kg			
	MC - MZ	PC - PZ	HC - HZ	FP - FZ - FDK		MC - MZ	PC - PZ	HC - HZ	FP - FZ - FDK
304 R2	217	257	242	217	140	51	60	55	51
304 R3	282	322	307	282	122	52	61	56	52
304 R4	335	375	360	335	122	56	65	60	56

	V	V1	Kg	V	V1	Kg	C	Input	I	F	F1	F2	Type	Input	Kg
304 R2	137.5	24	6	158	38	7	37	A		105	65	1/4 G	4	A	10
304 R3	137.5	24	6	158	38	7	37	A		105	65	1/4 G	4	A	10
304 R4	137.5	24	6	158	38	7	37	A	532	105	65	1/4 G	4	A	10

304 R

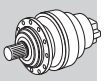

Metric

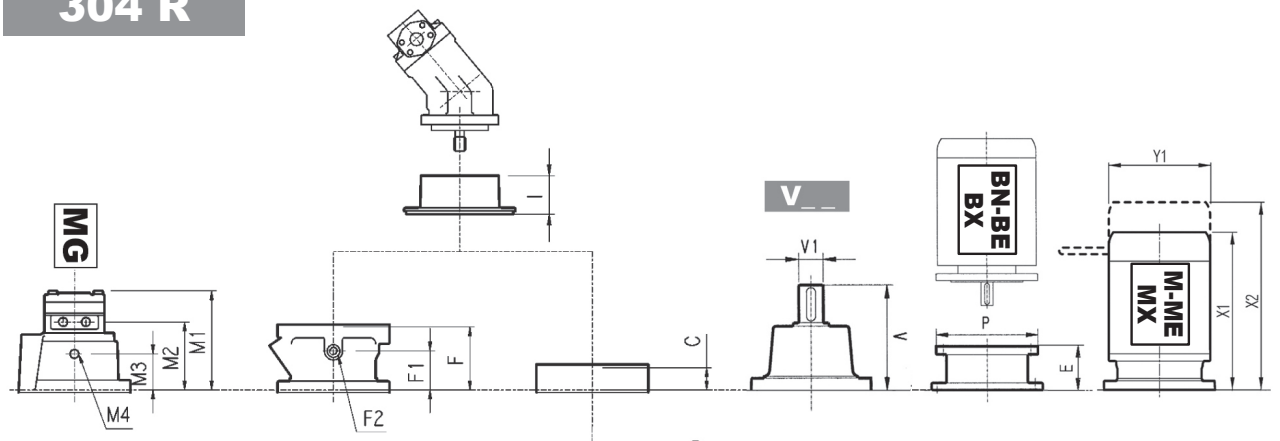

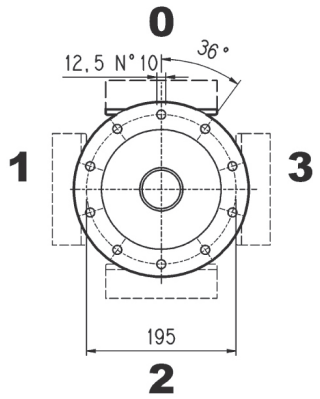

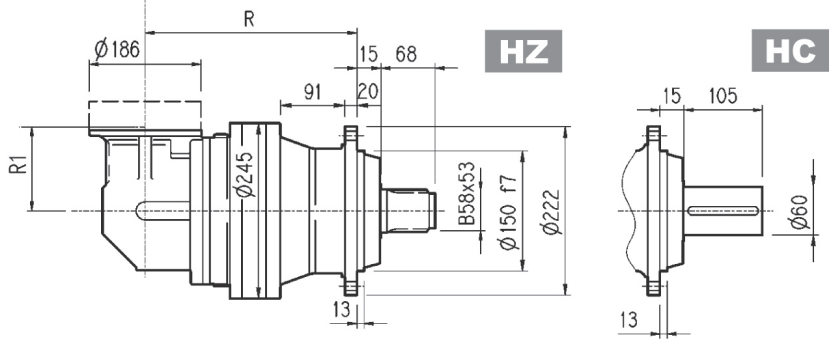

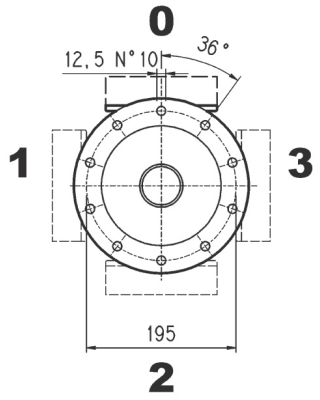

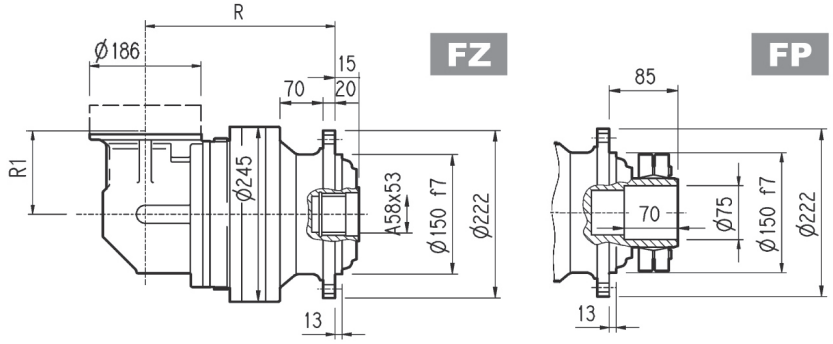

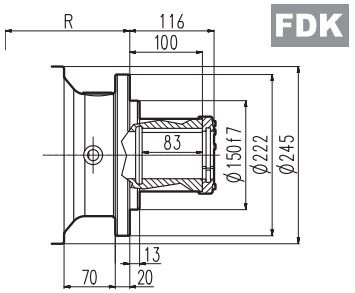

FP	T_{2max} = 64,600 lb•in

Dimensions are in mm

	P71		P80		P90		P100		P112		P132	
	E	P	E	P	E	P	E	P	E	P	E	P
304 R2	65	160	84	200	84	200	94	250	94	250	114	300
304 R3	65	160	84	200	84	200	94	250	94	250	114	300
304 R4	65	160	84	200	84	200	94	250	94	250	114	300

	S1 + M1			S2 + ME2S			S3 + ME3S			S3 + ME3L			S4 + ME4/MX4		
	X1	X2	Y1	X1	X2	Y1	X1	X2	Y1	X1	X2	Y1	X1	X2	Y1
304 R2	-	-	-	328	—	156	373	—	195	405	—	195	508	—	258
304 R3	253	314	138	328	—	156	373	—	195	405	—	195	—	—	—
304 R4	253	314	138	328	—	156	373	—	195	405	—	195	—	—	—

Bonfiglioli Riduttori

304 L

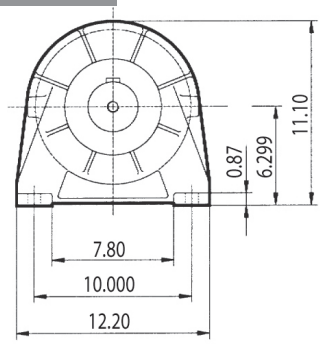

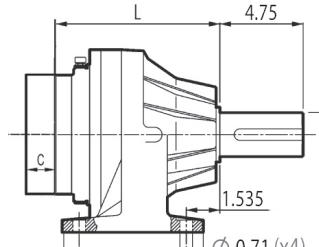

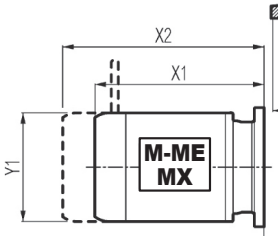

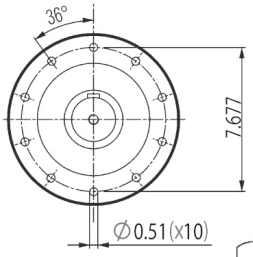

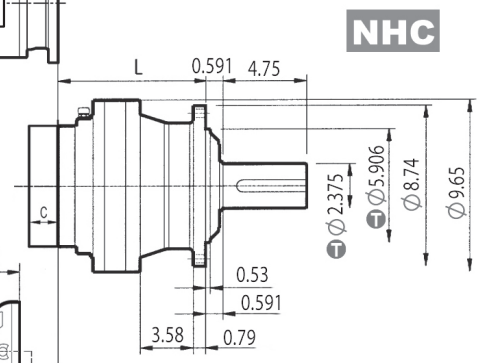

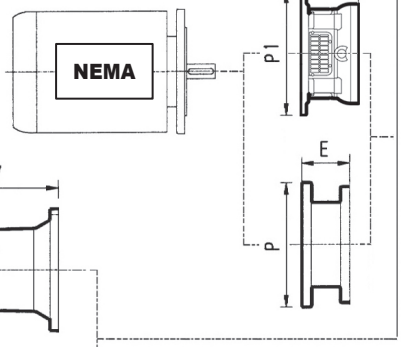

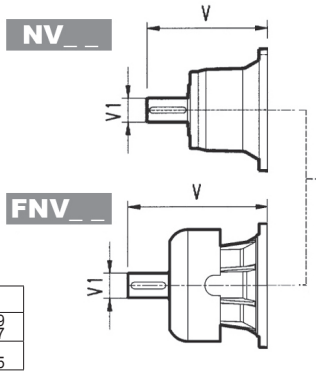

inch	Ⓣ
5.906	-0.00169 -0.00327
2.375	0 -0.00075

	PF N250TC		PF N280TC		PF N320TC		PF N360TC	
	E1	P1	E1	P1	E1	P1	E1	P1
304 L1*	8.661	15.748	8.661	15.748	9.843	15.748	10.236	17.717
304 L2	8.661	15.748	8.661	15.748	—	—	—	—
304 L3	8.661	15.748	8.661	15.748	—	—	—	—

(*): for NPC versions contact Bonfiglioli Technical Service
NOTE: for R design contact Bonfiglioli Technical Service
for PF N400TC contact Bonfiglioli Technical Service

Dimensions are in Inch except when shown in *italic [mm]*

	L		lbs	
	NPC	NHC	NPC	NHC
304 L1	6.50	5.91	88.2	77.2
304 L2	9.05	8.46	103.6	92.6
304 L3	11.14	10.55	112.4	101.4
304 L4	13.23	12.64	121.3	110.2

	V	V1	lbs	V	V1	lbs	V	V1	lbs	C	Input
304 L1	9.681	1.875	33.1	—	—	—	11.138	1.875	38.0	1.457	A
304 L2	5.996	1.125	13.2	6.437	1.625	15.4	—	—	—	1.457	A
304 L3	5.996	1.125	13.2	6.437	1.625	15.4	—	—	—	1.457	A
304 L4	5.996	1.125	13.2	6.437	1.625	15.4	—	—	—	1.457	A

	N56C		N140TC		N180TC		N210TC		N250TC		N280TC	
	E	P	E	P	E	P	E	P	E	P	E	P
304 L1	—	—	—	—	—	—	—	—	5.22	11.81	6.22	13.78
304 L2	4.51	6.70	4.51	6.70	5.22	8.82	5.22	8.82	5.22	8.82	6.12	11.81
304 L3	4.51	6.70	4.51	6.70	5.22	8.82	5.22	8.82	5.22	8.82	6.12	11.81
304 L4	4.51	6.70	4.51	6.70	5.22	8.82	5.22	8.82	5.22	8.82	6.12	11.81

	S1 + M1			S2 + ME2S			S3 + ME3S			S3 + ME3L			S4 + ME4/MX4			S5 + ME5S/MX5S			S5 + ME5L/MX5L		
	X1	X2	Y1	X1	X2	Y1	X1	X2	Y1	X1	X2	Y1	X1	X2	Y1	X1	X2	Y1	X1	X2	Y1
304 L1	—	—	—	—	—	—	—	—	—	—	—	—	18.11	—	10.16	21.73	—	12.20	23.46	—	12.20
304 L2	9.96	12.36	5.43	11.02	—	6.14	12.80	—	7.68	14.06	—	7.68	18.11	—	10.16	—	—	—	—	—	—
304 L3	9.96	12.36	5.43	11.02	—	6.14	12.80	—	7.68	14.06	—	7.68	18.11	—	10.16	—	—	—	—	—	—
304 L4	9.96	12.36	5.43	11.02	—	6.14	12.80	—	7.68	14.06	—	7.68	18.11	—	10.16	—	—	—	—	—	—

304 R

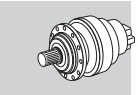

Imperial

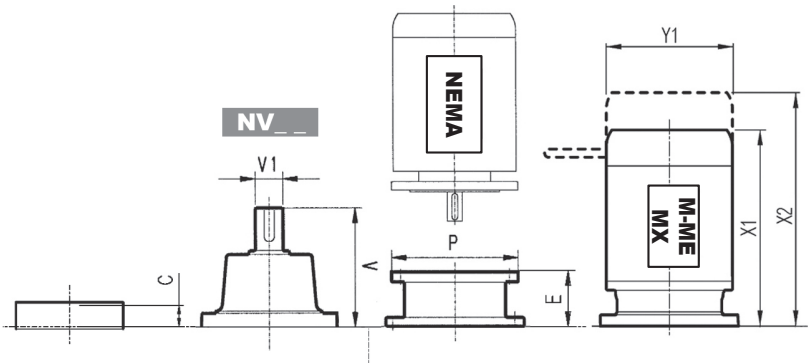

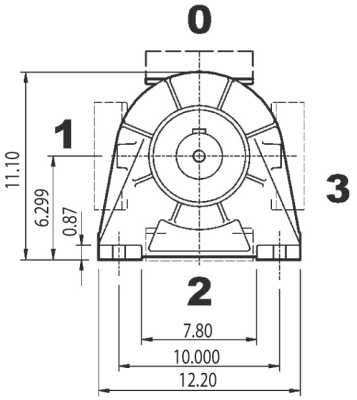

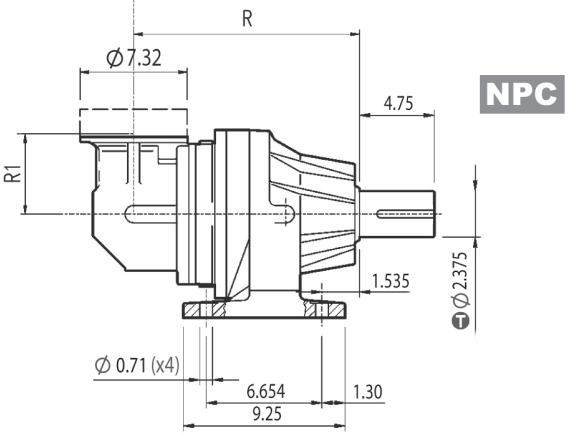

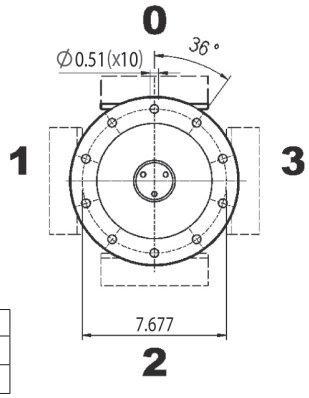

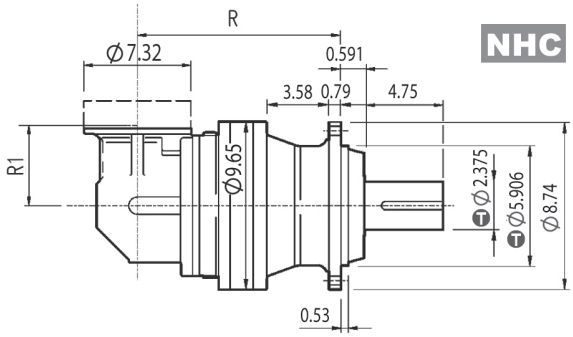

inch	T
5.906	-0.00169 -0.00327
2.375	0 -0.00075

Dimensions are in Inch except when shown in *italic [mm]*

	R		R1	lbs	
	NPC	NHC		NPC	NHC
304 R2	10.12	9.53	5.51	132.3	121.3
304 R3	12.68	12.09	4.80	134.5	123.5
304 R4	14.76	14.17	4.80	143.3	132.3

	V	V1	lbs	V	V1	lbs	C	Input
304 R2	5.996	1.125	13.2	6.437	1.625	15.4	1.457	A
304 R3	5.996	1.125	13.2	6.437	1.625	15.4	1.457	A
304 R4	5.996	1.125	13.2	6.437	1.625	15.4	1.457	A

	N56C		N140TC		N180TC		N210TC		N250TC		N280TC	
	E	P	E	P	E	P	E	P	E	P	E	P
304 R2	4.51	6.70	4.51	6.70	5.22	8.82	5.22	8.82	5.22	8.82	6.12	11.81
304 R3	4.51	6.70	4.51	6.70	5.22	8.82	5.22	8.82	5.22	8.82	6.12	11.81
304 R4	4.51	6.70	4.51	6.70	5.22	8.82	5.22	8.82	5.22	8.82	6.12	11.81

	S1 + M1			S2 + ME2S			S3 + ME3S			S3 + ME3L			S4 + ME4/MX4		
	X1	X2	Y1	X1	X2	Y1	X1	X2	Y1	X1	X2	Y1	X1	X2	Y1
304 R2	—	—	—	12.91	—	6.14	14.68	—	7.68	15.94	—	7.68	20	—	10.16
304 R3	9.96	12.36	5.43	12.91	—	6.14	14.68	—	7.68	15.94	—	7.68	—	—	—
304 R4	9.96	12.36	5.43	12.91	—	6.14	14.68	—	7.68	15.94	—	7.68	—	—	—

Bonfiglioli Riduttori

3/V 04 L3

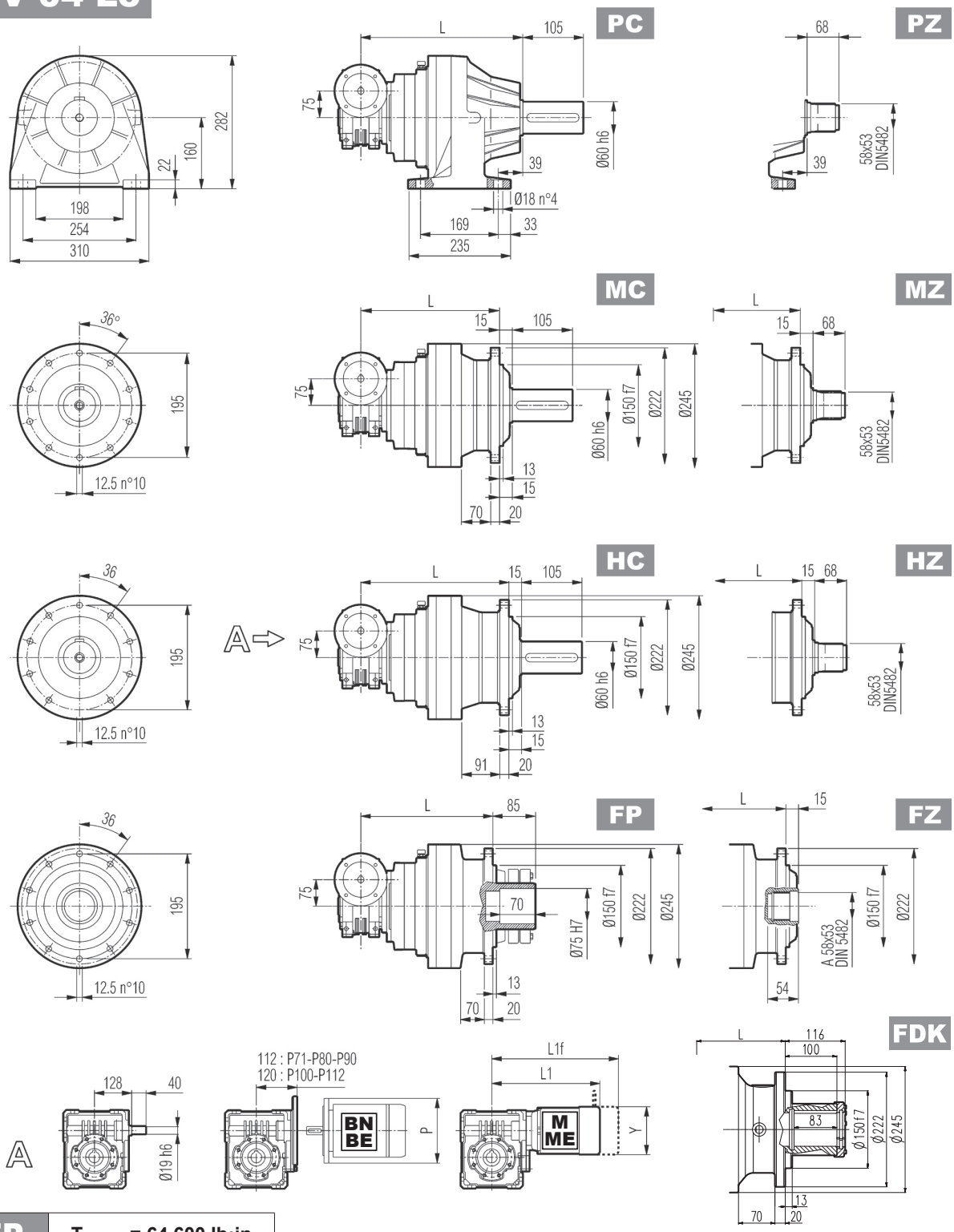

FP | T_{2max} = 64,600 lb•in

Dimensions are in mm

	L				Kg				P71	P80	P90	P100	P112
	MC - MZ	PC - PZ	HC - HZ	FP - FZ - FDK	MC - MZ	PC - PZ	HC - HZ	FP - FZ - FDK	P	P	P	P	P
3/V 04 L3	305	345	330	305	47	56	51	47	160	200	200	250	250

	S1 + M1			S2 + ME2S			S3 + ME3S			S3 + ME3L		
	L1	L1f	Y	L1	L1f	Y	L1	L1f	Y	L1	L1f	Y
3/V 04 L3	308	369	138	333	—	156	376	—	193	408	—	193

3/V 04 L3

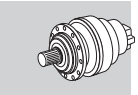

Imperial

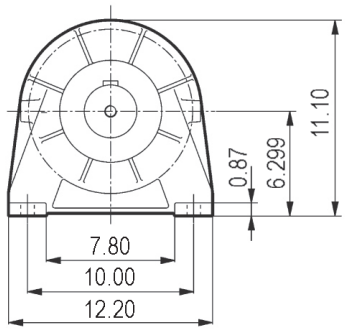

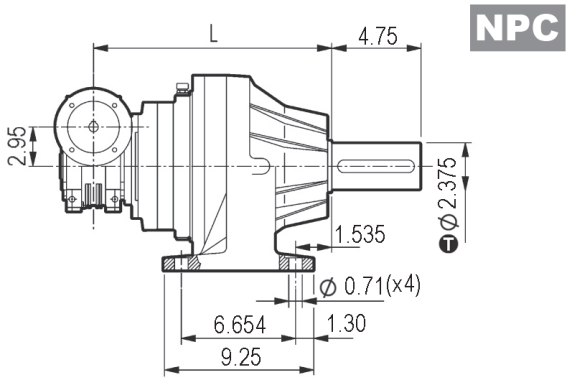

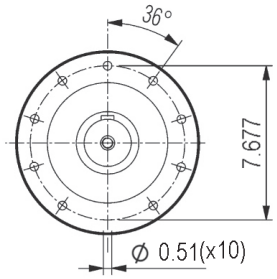

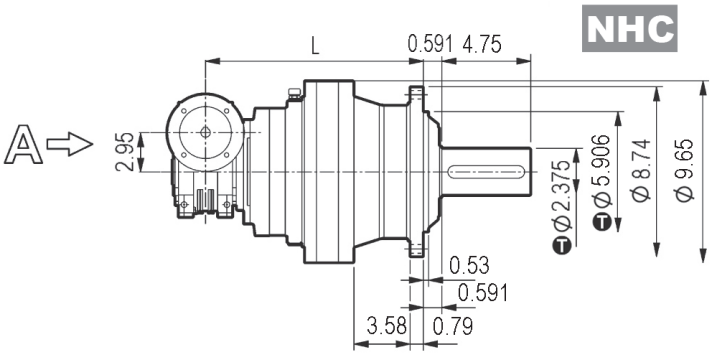

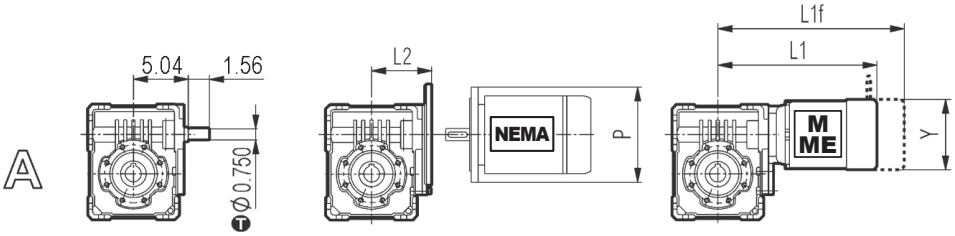

inch	T
5.906	-0.00169 -0.00327
2.375	0 -0.00075
0.750	0 -0.00051

Dimensions are in Inch except when shown in *italic [mm]*

	L		lbs		N56C	N140TC	N180TC
	NPC	NHC	NPC	NHC	P	P	P
3/V 04 L3	13.58	12.99	123.5	112.4	6.54	6.54	9.02

	S1 + M1			S2 + ME2S			S3 + ME3S			S3 + ME3L		
	L1	L1f	Y	L1	L1f	Y	L1	L1f	Y	L1	L1f	Y
3/V 04 L3	12.12	14.53	5.43	13.11	—	6.14	14.80	—	7.60	16.06	—	7.60

Bonfiglioli Riduttori

3/A 04 L2

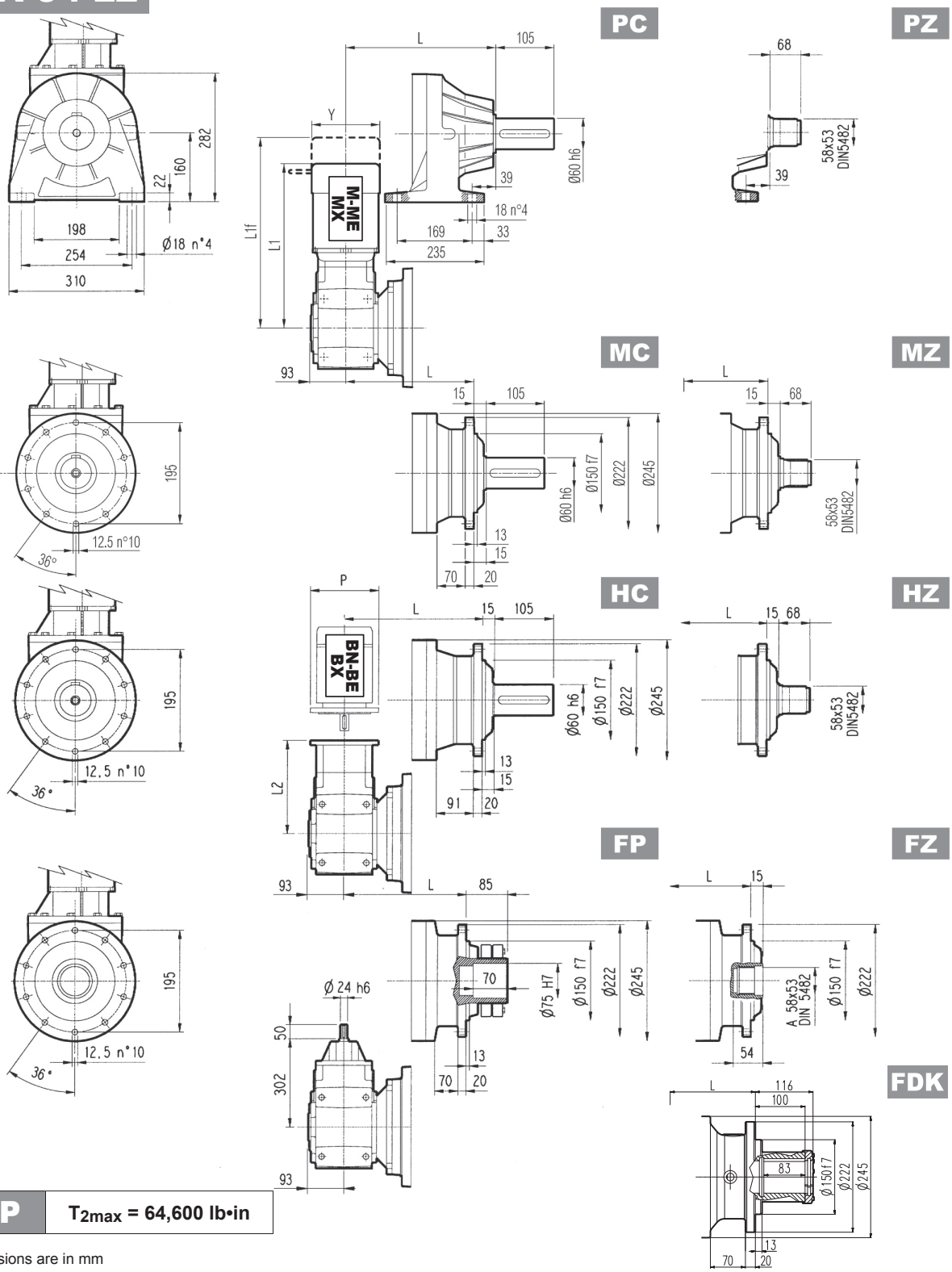

FP | **T_{2max} = 64,600 lb•in**

Dimensions are in mm

	L				Kg			
	MC - MZ	PC - PZ	HC - HZ	FP - FZ - FDK	MC - MZ	PC - PZ	HC - HZ	FP - FZ - FDK
3/A 04 L2	258	298	283	258	80	95	90	80

	P63		P71		P80		P90		P100		P112		P132	
	L2	P	L2	P	L2	P	L2	P	L2	P	L2	P	L2	P
3/A 04 L2	263	140	263	160	282.5	200	282.5	200	292.5	250	292.5	250	329	457

	S1 + M1			S2 + ME2S			S3 + ME3S			S3 + ME3L			S4 + ME4/MX4		
	L1	L1f	Y	L1	L1f	Y	L1	L1f	Y	L1	L1f	Y	L1	L1f	Y
3/A 04 L2	418	439	138	447	—	156	490	—	195	532	—	195	630	—	258

3/A 04 L2

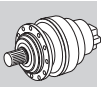

Imperial

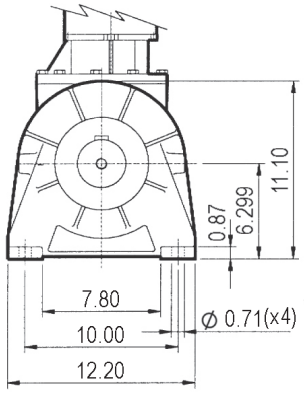

NPC

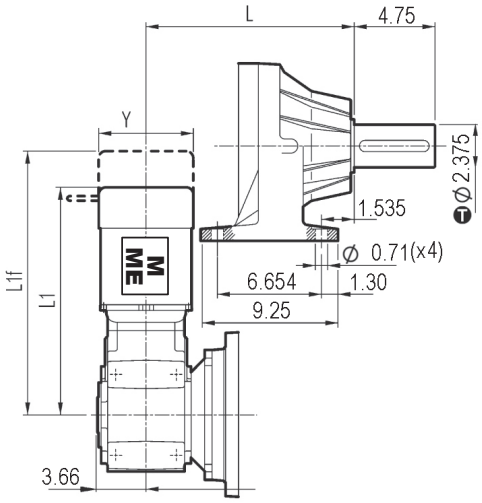

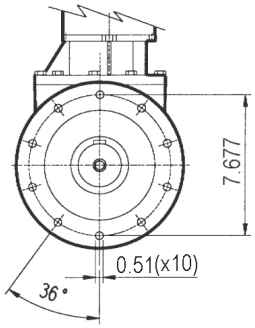

NHC

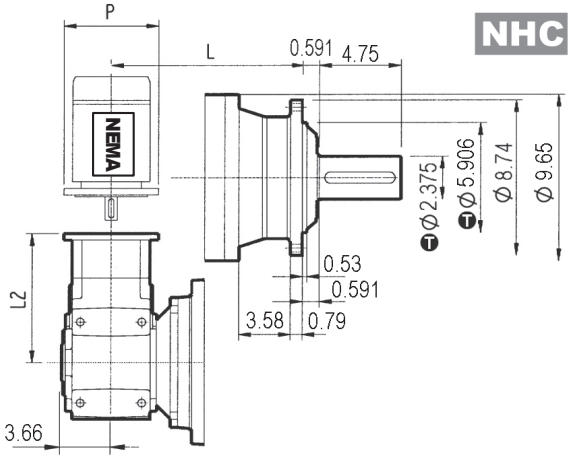

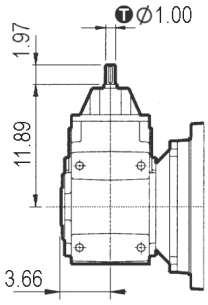

inch	Ⓣ
5.906	-0.00169 -0.00327
2.375	0 -0.00075
1.000	0 -0.00051

Dimensions are in Inch except when shown in *italic [mm]*

	L		lbs		N56C		N140TC		N180TC	
	NPC	NHC	NPC	NHC	L2	P	L2	P	L2	P
3/A 04 L2	11.73	11.14	210	200	10.35	6.50	10.35	6.50	11.10	6.50

	S1 + M1			S2 + ME2S			S3 + ME3S			S3 + ME3L			S4 + ME4/MX4		
	L1	L1f	Y	L1	L1f	Y	L1	L1f	Y	L1	L1f	Y	L1	L1f	Y
3/A 04 L2	16.46	17.28	5.43	17.60	—	6.14	19.29	—	7.68	20.55	—	7.68	24.80	—	10.16

304 L | 304 R | 3/V 04 L3 | 3/A 04 L2

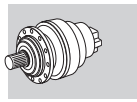

Metric

Imperial

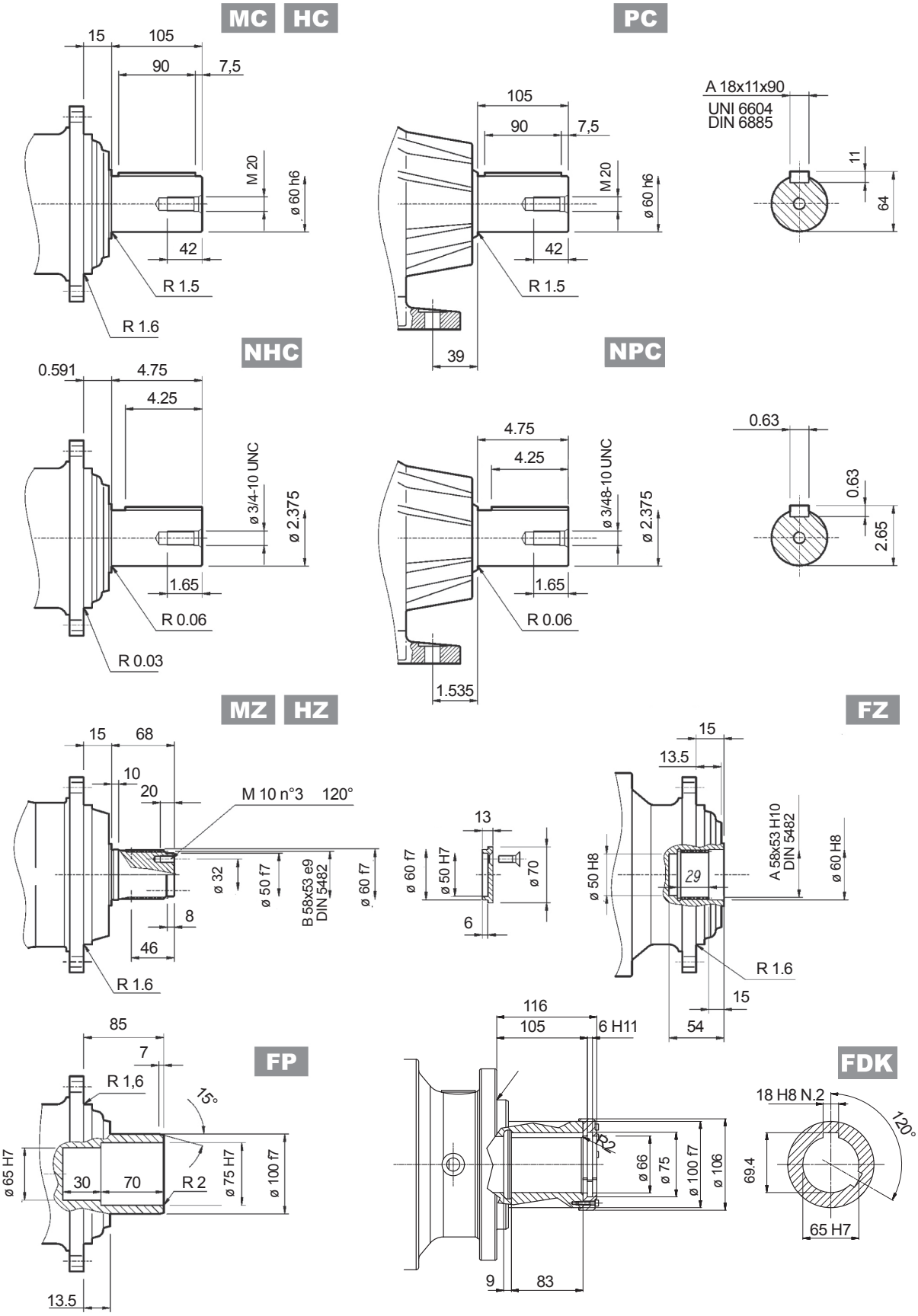

FP	T_{2max} = 64,600 lb•in

Dimensions are in mm when shown in italic, otherwise dimensions are in inches

inch	T
2.375	0 / -0.00075

Flange

W0A

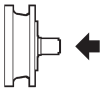

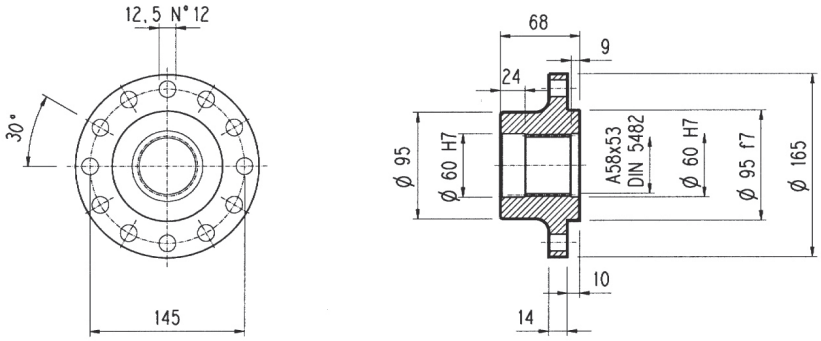

Material: Steel C40

Dimensions are in mm

Pinions

P...

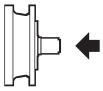

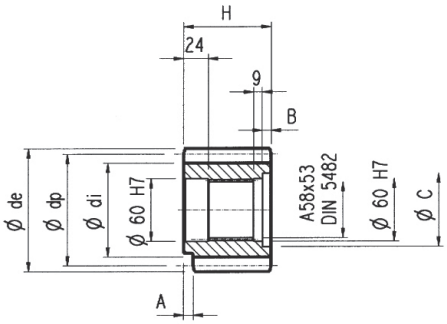

α = 20°

Dimensions are in mm

	m	z	x	dp	di	de	H	A	B	C	Material
PCL1	5	19	—	95	82	104	77	12	9	72	Steel 39NiCrMo3 hardened and tempered
PCL2	5	19	—	95	82	104	68	—	—	—	
PCM	5	20	—	100	87.5	110	68	18	—	—	Steel 18NiCrMo5 case hardened
PCP	5	22	—	110	97.5	120	68	18	—	—	
PDE	6	14	0.500	84	75	99.6	68	—	—	—	Steel 39NiCrMo3 hardened and tempered
PDI	6	18	0.500	108	99	123.6	68	—	—	—	
PDM	6	20	0.833	120	115	140	68	—	—	—	
PFD	8	13	0.675	104	95	127.6	68	—	—	—	Steel 18NiCrMo5 case hardened
PFE1	8	14	—	112	92	126	68	—	—	—	
PFE2	8	14	—	112	92	126	80	—	12	72	
PFF	8	15	—	120	100	136	68	—	—	—	Steel 39NiCrMo3 hardened and tempered
PFP	8	22	—	176	156	190	77	12	10	71	
PHG	10	16	0.500	160	145	188	75	—	7	72	

Sleeve coupling

M0A

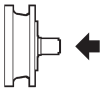

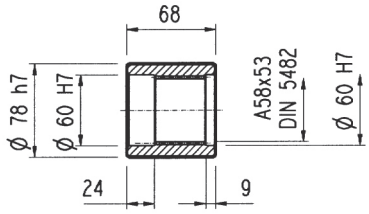

Material: Steel 16CrNi4

Dimensions are in mm

Splined bars

B0A

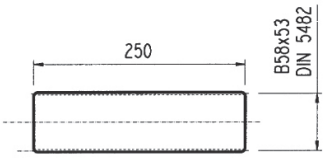

Material: Case hardening steel 18NiCrMo5 UNI 5331
must be case hardened 50-55 HRC

Shrink disc

G0A

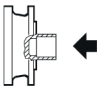

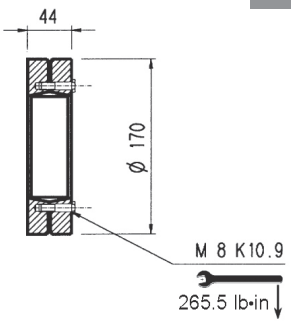

Dimensions are in mm

304 L 304 R

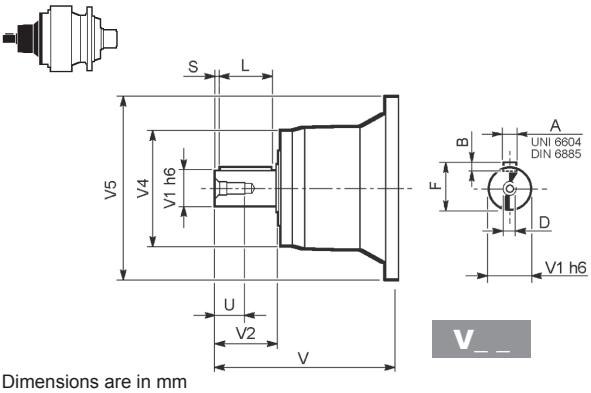

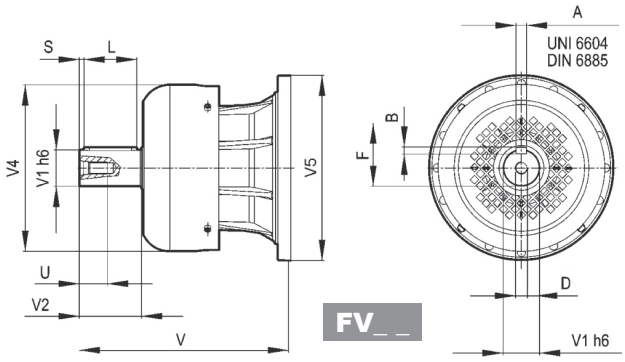

Dimensions are in mm

		V	V1	V2	V4	V5	A	B	F	L	S	D	U
304 L1	**V05B**	239	48	82	155	245	14	9	51.5	70	6	M16	36
	FV05B	276	48	82	219.5	244	14	9	51.5	70	6	M16	36
304 L2	**V01A**	137.5	24	36	120	186	8	7	27	30	3	M8	19
	V01B	158	38	58	120	186	10	8	41	50	4	M12	28
304 L3	**V01A**	137.5	24	36	120	186	8	7	27	30	3	M8	19
	V01B	158	38	58	120	186	10	8	41	50	4	M12	28
304 L4	**V01A**	137.5	24	36	120	186	8	7	27	30	3	M8	19
	V01B	158	38	58	120	186	10	8	41	50	4	M12	28
304 R2-R3-R4	**V01A**	137.5	24	36	120	186	8	7	27	30	3	M8	19
	V01B	158	38	58	120	186	10	8	41	50	4	M12	28

304 L 304 R

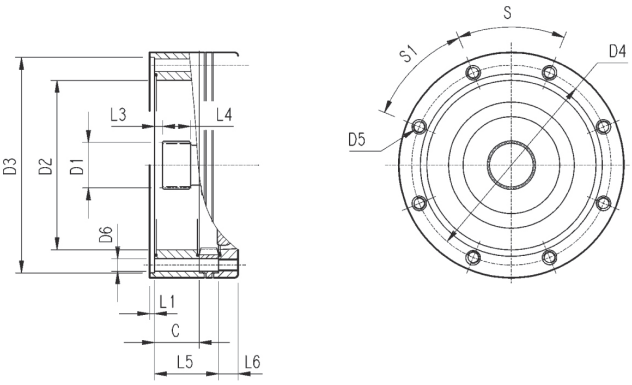

Dimensions are in mm

		C	D1	D2	D3	D4	D5	D6	L1	L2	L3	L4	L5	L6	S	S1	Input
304 L1	**V9AA**	37	40x36 DIN5482	140	178 H7	165	M10 n°8	11	4	—	9	18	—	18	45°	45°	A
304 L2	**V9AA**	37	40x36 DIN5482	140	178 H7	165	M10 n°8	11	4	—	9	18	65	18	45°	45°	A
304 L3	**V9AA**	37	40x36 DIN5482	140	178 H7	165	M10 n°8	11	4	—	9	18	118	18	45°	45°	A
304 L4	**V9AA**	37	40x36 DIN5482	140	178 H7	165	M10 n°8	11	4	—	9	18	171	18	45°	45°	A
304 R2-R3-R4	**V9AA**	37	40x36 DIN5482	140	178 H7	165	M10 n°8	11	4	—	9	18	37	18	45°	45°	A

3/V 04 L3

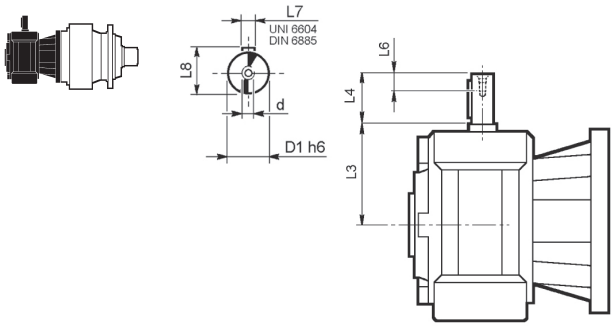

Dimensions are in mm

	D1 h6	L3	L4	L6	L7	L8	d
3/V 04 L3_HS	19	128	40	16	6	21.5	M6

3/A 04 L2

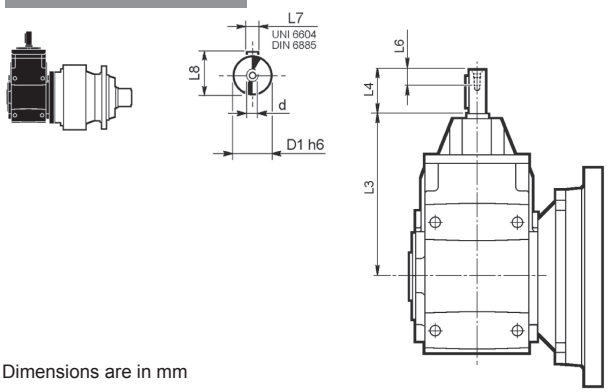

Dimensions are in mm

	D1 h6	L3	L4	L6	L7	L8	d
3/A 04 L2_HS	24	302	50	19	8	27	M8

304 L 304 R

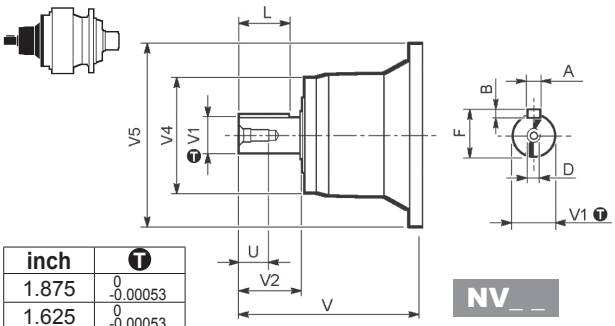

NV_ _

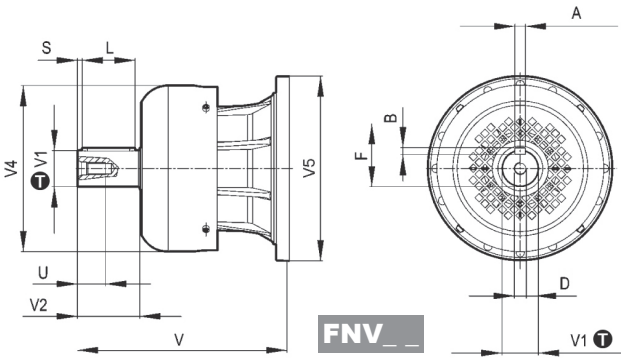

FNV_ _

inch	T
1.875	0 -0.00053
1.625	0 -0.00053
1.125	0 -0.00051

Dimensions are in Inch except when shown in *italic [mm]*

		V	V1	V2	V4	V5	A	B	F	L	D	U
304 L1	**NV05B**	9.681	1.875	3.500	6.417	9.606	0.500	0.500	2.091	3.000	5/8-11 UNC	1.417
	FNV05B	11.138	1.875	3.500	8.641	9.606	0.500	0.500	2.091	3.000	5/8-11 UNC	1.417
304 L2	**NV01A**	5.996	1.125	2.000	4.980	7.323	0.250	0.250	1.236	1.752	3/8-16 UNC	0.866
	NV01B	6.437	1.625	2.500	4.980	7.323	0.375	0.375	1.791	2.000	1/2-13 UNC	1.102
304 L3	**NV01A**	5.996	1.125	2.000	4.980	7.323	0.250	0.250	1.236	1.752	3/8-16 UNC	0.866
	NV01B	6.437	1.625	2.500	4.980	7.323	0.375	0.375	1.791	2.000	1/2-13 UNC	1.102
304 L4	**NV01A**	5.996	1.125	2.000	4.980	7.323	0.250	0.250	1.236	1.752	3/8-16 UNC	0.866
	NV01B	6.437	1.625	2.500	4.980	7.323	0.375	0.375	1.791	2.000	1/2-13 UNC	1.102
304 R2-R3-R4	**NV01A**	5.996	1.125	2.000	4.980	7.323	0.250	0.250	1.236	1.752	3/8-16 UNC	0.866
	NV01B	6.437	1.625	2.500	4.980	7.323	0.375	0.375	1.791	2.000	1/2-13 UNC	1.102

304 L 304 R

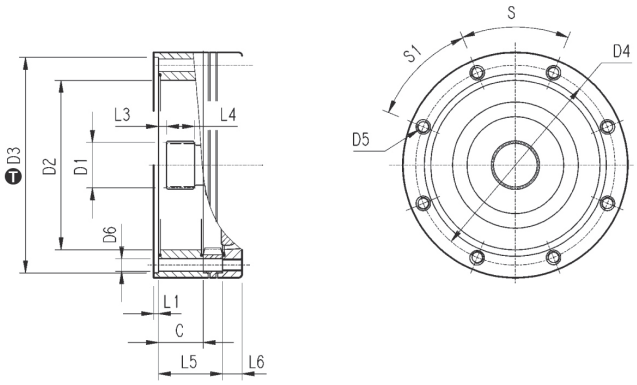

inch	T
7.01	+0.00157 0

Dimensions are in Inch except when shown in *italic [mm]*

		C	D1	D2	D3	D4	D5	D6	L1	L2	L3	L4	L5	L6	S	S1	Input
304 L1	**V9AA**	1.46	*40x36 DIN5482*	5.51	7.01	6.50	*M10 n°8*	0.43	0.16	—	0.35	0.71	—	0.71	45°	45°	A
304 L2	**V9AA**	1.46	*40x36 DIN5482*	5.51	7.01	6.50	*M10 n°8*	0.43	0.16	—	0.35	0.71	2.56	0.71	45°	45°	A
304 L3	**V9AA**	1.46	*40x36 DIN5482*	5.51	7.01	6.50	*M10 n°8*	0.43	0.16	—	0.35	0.71	4.65	0.71	45°	45°	A
304 L4	**V9AA**	1.46	*40x36 DIN5482*	5.51	7.01	6.50	*M10 n°8*	0.43	0.16	—	0.35	0.71	6.73	0.71	45°	45°	A
304 R2-R3-R4	**V9AA**	1.46	*40x36 DIN5482*	5.51	7.01	6.50	*M10 n°8*	0.43	0.16	—	0.35	0.71	1.46	0.71	45°	45°	A

3/V 04 L3

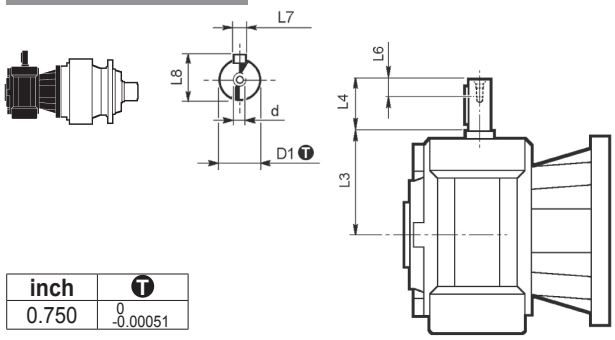

inch	T
0.750	0 -0.00051

Dimensions are in Inch except when shown in *italic [mm]*

	D1	L3	L4	L6	L7	L8	d
3/V 04 L3_NHS	0.750	5.04	1.575	0.63	0.188	0.832	1/4-20UNC

3/A 04 L2

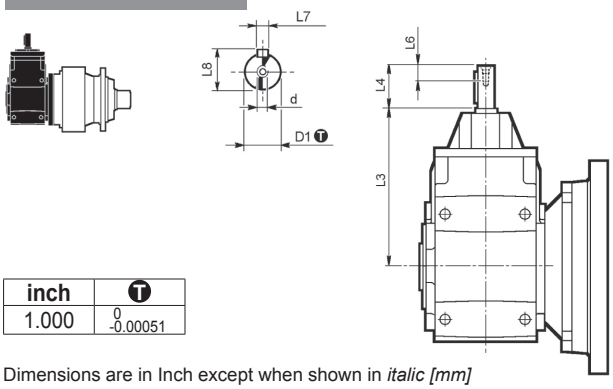

inch	T
1.000	0 -0.00051

Dimensions are in Inch except when shown in *italic [mm]*

	D1	L3	L4	L6	L7	L8	d
3/A 04 L2_NHS	1.000	11.89	1.969	0.75	0.250	1.109	3/8-16UNC

Permissible radial and axial loads on output shaft with $Fh_2 : n_2 \cdot h = 100000$

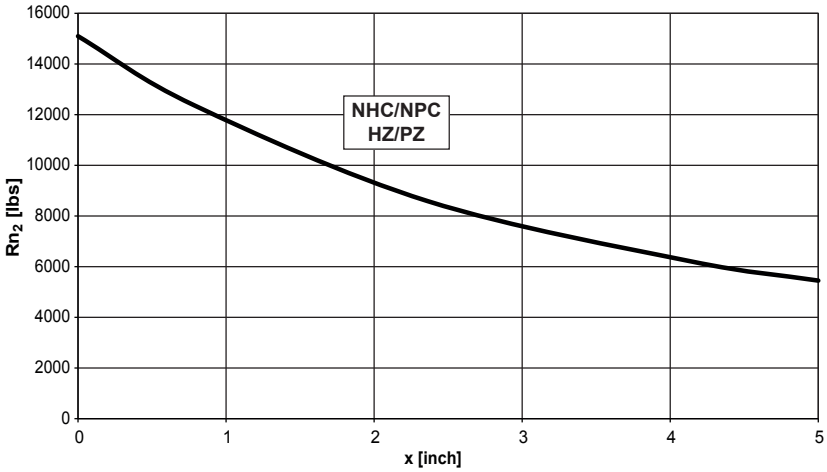

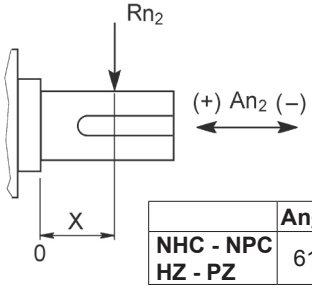

	An2 (+)	An2 (-)
NHC - NPC HZ - PZ	6182	4945

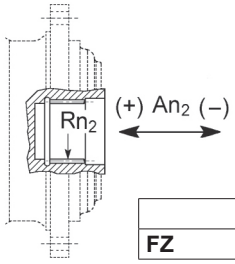

	Rn2	An2 (+/-)
FZ	2504	2609

Load corrective factor fh_2 on shafts	$Fh_2 = n_2 \cdot h$		10000	25000	50000	100000	500000	1000000
	fh_2	FZ	**2.15**	**1.59**	**1.26**	**1.00**	**0.58**	**0.46**
		NHC - NPC - HZ -PZ	**1.48**	**1.48**	**1.23**	**1.00**	**0.62**	**0.50**

Permissible radial loads on input shaft with $Fh_1 : n_1 \cdot h = 250000$

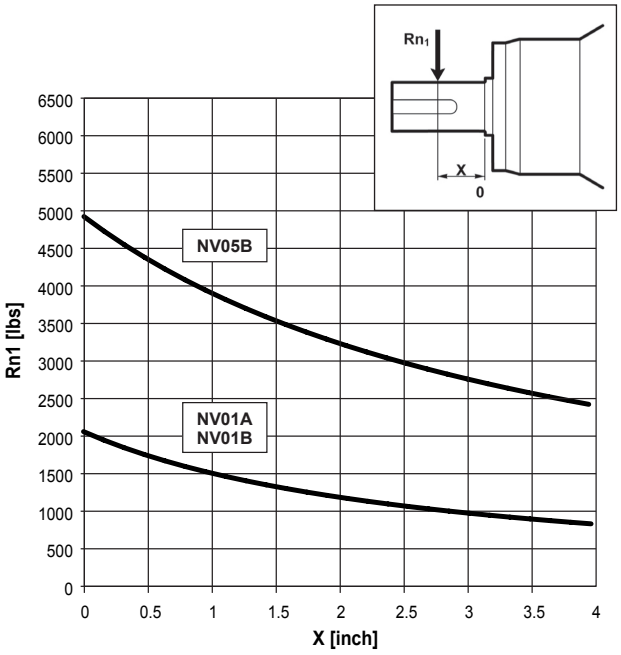

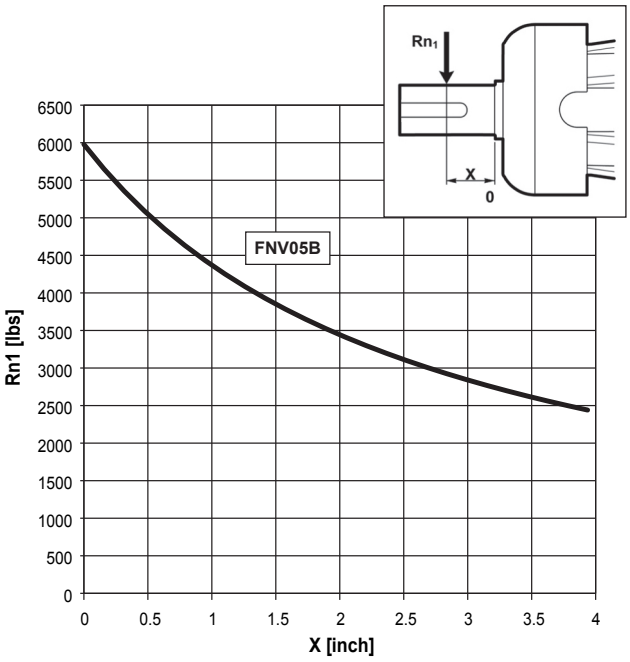

Load corrective factor fh_1 on shafts	$Fh_1 = n_1 \cdot h$	250000	500000	1000000	2000000	5000000	10000000
	fh_1	**1**	**0.79**	**0.63**	**0.50**	**0.37**	**0.29**

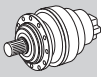

304 VK

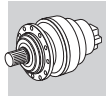

Metric

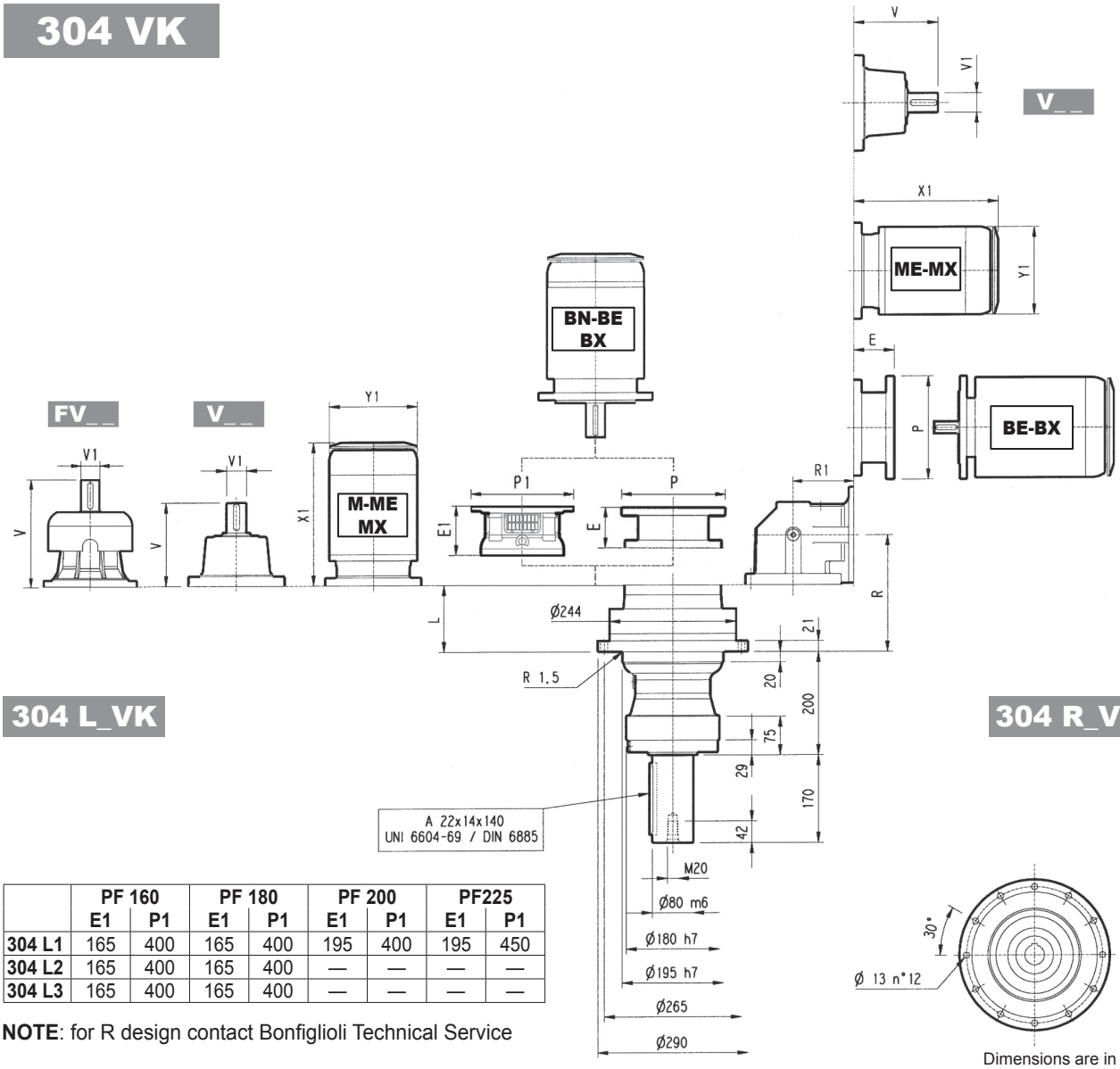

304 L_VK

304 R_VK

	PF 160		PF 180		PF 200		PF225	
	E1	P1	E1	P1	E1	P1	E1	P1
304 L1	165	400	165	400	195	400	195	450
304 L2	165	400	165	400	—	—	—	—
304 L3	165	400	165	400	—	—	—	—

NOTE: for R design contact Bonfiglioli Technical Service

Dimensions are in mm

	L	Kg	V	V1	Kg	V	V1	Kg	V	V1	Kg	V	V1	Kg	P71		P80		P90		P100		P112		P132		P160		P180		P200	
															E	P	E	P	E	P	E	P	E	P	E	P	E	P	E	P	E	P
304 L1	51	65	239	48	15	—	—	—	276	48	17	—	—	—	—	—	—	—	—	—	—	—	—	—	114	300	144	350	144	350	174	400
304 L2	116	73	137.5	24	6	158	38	7	—	—	—	—	—	—	65	160	84	200	84	200	94	250	94	250	114	300	144	350	—	—	—	—
304 L3	169	76	137.5	24	6	158	38	7	—	—	—	—	—	—	65	160	84	200	84	200	94	250	94	250	114	300	144	350	—	—	—	—
304 L4	222	80	137.5	24	6	158	38	7	—	—	—	—	—	—	65	160	84	200	84	200	94	250	94	250	114	300	144	350	—	—	—	—

	S1 + M1			S2 + ME2S			S3 + ME3S			S3 + ME3L			S4 + ME4/MX4			S5 + ME5S/MX5S			S5 + ME5L/MX5L		
	X1	X2	Y1	X1	X2	Y1	X1	X2	Y1	X1	X2	Y1	X1	X2	Y1	X1	X2	Y1	X1	X2	Y1
304 L1	—	—	—	—	—	—	—	—	—	—	—	—	460	—	258	552	—	310	596	—	310
304 L2	253	314	138	280	—	156	325	—	195	357	—	195	460	—	258	—	—	—	—	—	—
304 L3	253	314	138	280	—	156	325	—	195	357	—	195	460	—	258	—	—	—	—	—	—
304 L4	253	314	138	280	—	156	325	—	195	357	—	195	460	—	258	—	—	—	—	—	—

	R	R1	Kg	V	V1	Kg	V	V1	Kg	P71		P80		P90		P100		P112		P132	
										E	P	E	P	E	P	E	P	E	P	E	P
304 R2	143	140	85	137.5	24	6	158	38	7	65	160	84	200	84	200	94	250	94	250	114	300
304 R3	208	122	86	137.5	24	6	158	38	7	65	160	84	200	84	200	94	250	94	250	114	300
304 R4	261	122	90	137.5	24	6	158	38	7	65	160	84	200	84	200	94	250	94	250	114	300

	S1 + ME1			S2 + ME2S			S3 + ME3S			S3 + ME3L			S4 + ME4/MX4		
	X1	X2	Y1	X1	X2	Y1	X1	X2	Y1	X1	X2	Y1	X1	X2	Y1
304 R2	—	—	—	328	—	156	373	—	195	405	—	195	508	—	258
304 R3	253	314	138	328	—	156	373	—	195	405	—	195	—	—	—
304 R4	253	314	138	328	—	156	373	—	195	405	—	195	—	—	—

304 VK

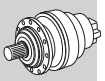

Metric

The diagram below allows the calculation of permitted overhung load R_{x2} on the output shaft of gearbox, with radial force applying at a distance x from shaft shoulder.
The curves are relevant to value resulting from the relationship of trust load A_{n2} to radial load R_{n2}, based on n_2 = 10 rpm and 10000 hrs theoretical lifetime.

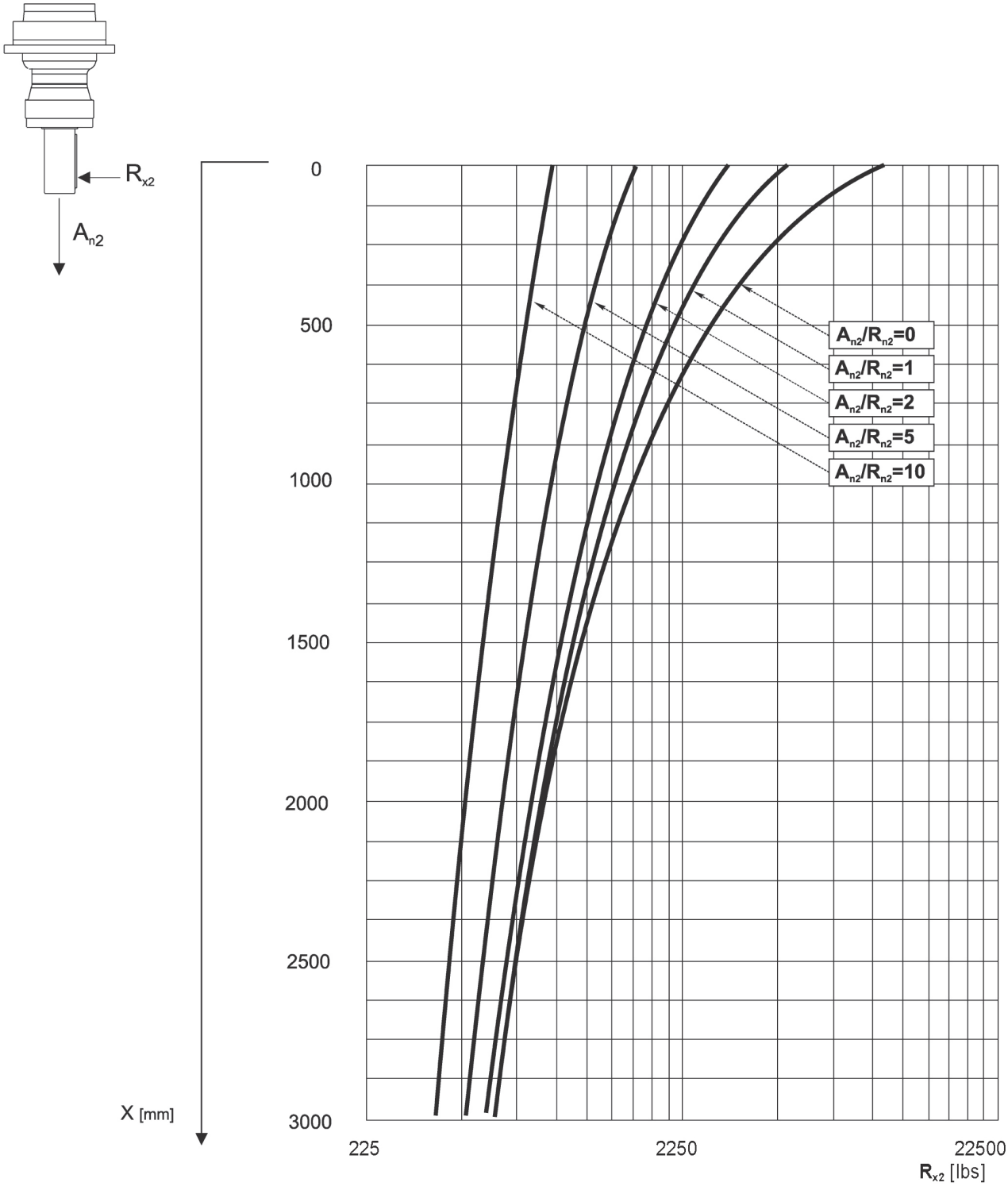

305 L

	Hydraulic motor										
	MG							542			Kg
cm³	050	080	100	125	160	200	250				
	M1							M2	M3	M4	
305 L1	—	—	—	—	203	210	219	135	77	1/4G	20
305 L2	162	167	171	175	181	188	—	113	60	1/4G	14

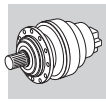

Metric

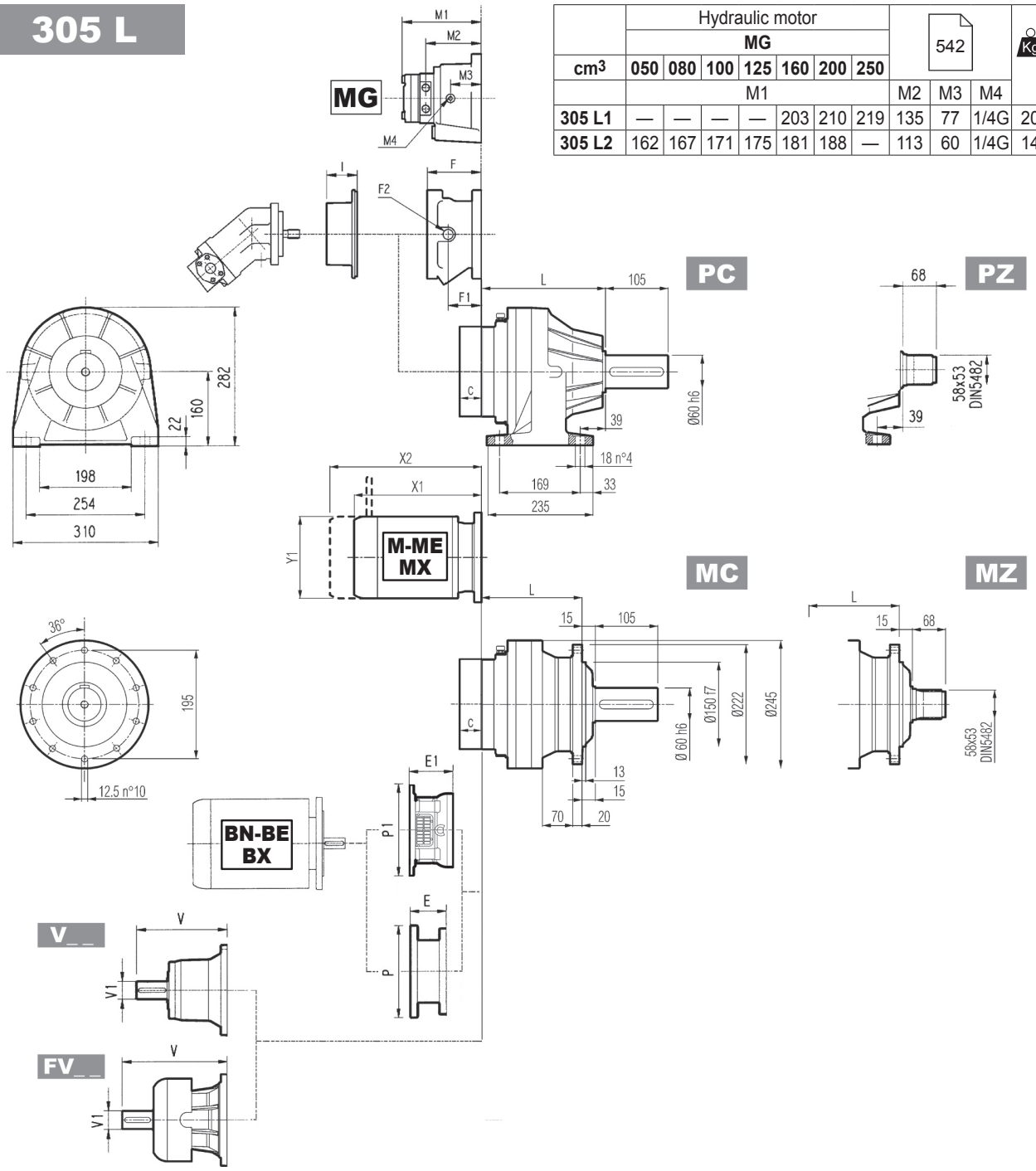

Dimensions are in mm

	L				Kg			
	MC - MZ	PC - PZ	HC - HZ	FP - FZ - FDK	MC - MZ	PC - PZ	HC - HZ	FP - FZ - FDK
305 L1	143	183	168	143	36	45	40	36
305 L2	208	248	233	208	43	52	47	43
305 L3	261	301	286	261	47	56	51	47
305 L4	314	354	339	314	51	60	55	51

	V	V1	Kg	V	V1	Kg	V	V1	Kg	C	Input	I	F	F1	F2	Type	Input	Kg
305 L1	239	48	15	—	—	—	276	48	17	37	A		145	95	1/4 G	5	A	16
305 L2	137.5	24	6	158	38	7	—	—	—	37	A		105	65	1/4 G	4	A	10
305 L3	137.5	24	6	158	38	7	—	—	—	37	A		105	65	1/4 G	4	A	10
305 L4	137.5	24	6	158	38	7	—	—	—	37	A	532	105	65	1/4 G	4	A	10

305 L

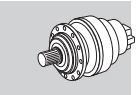

Metric

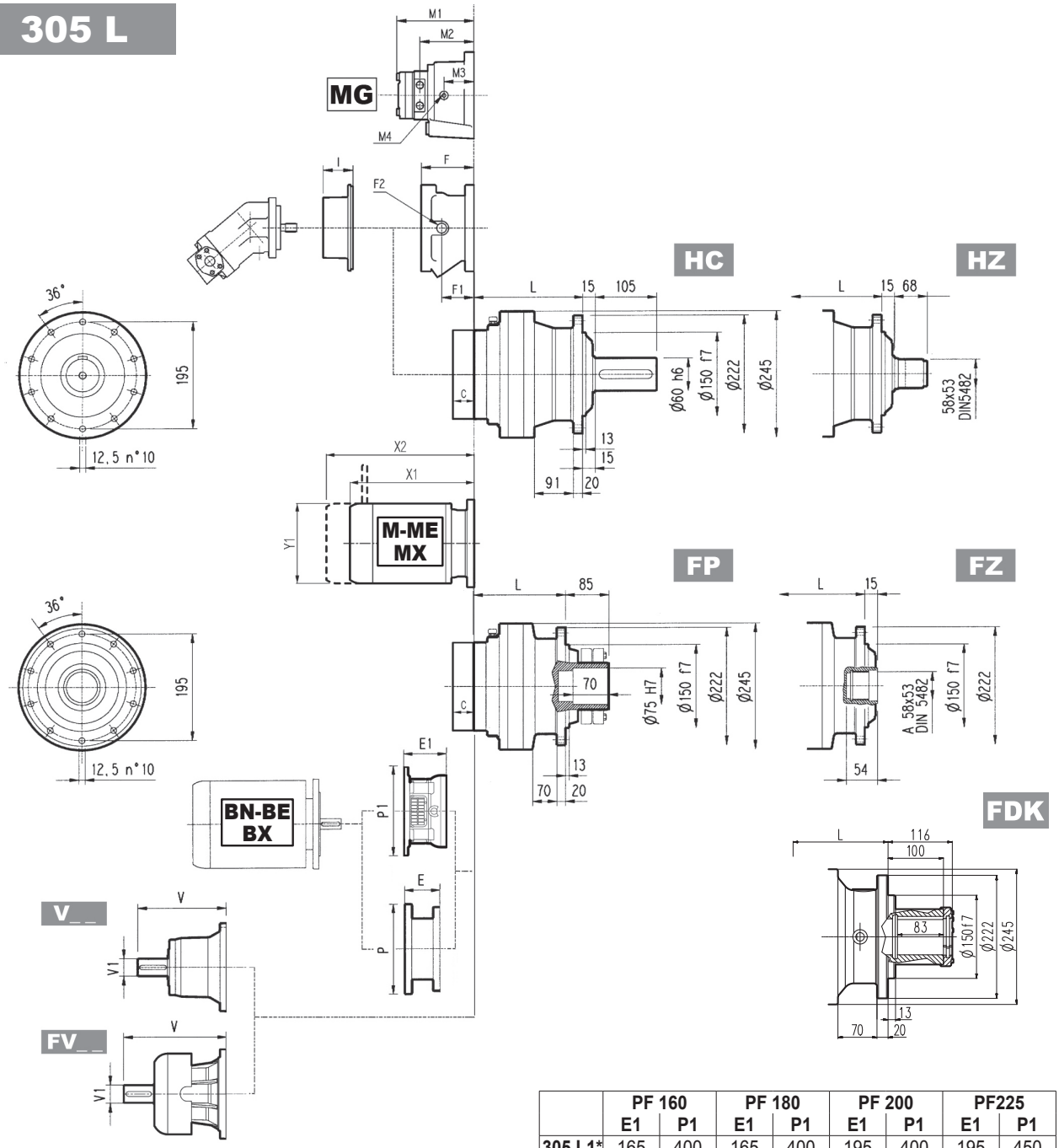

	PF 160		PF 180		PF 200		PF225	
	E1	P1	E1	P1	E1	P1	E1	P1
305 L1*	165	400	165	400	195	400	195	450
305 L2	165	400	165	400	—	—	—	—
305 L3	165	400	165	400	—	—	—	—

(*): for PC-PZ versions contact Bonfiglioli technical service
NOTE: For R design contact Bonfiglioli Technical service

FP | **T_{2max} = 66,380 lb•in**

Dimensions are in mm

	P71		P80		P90		P100		P112		P132		P160		P180		P200	
	E	P	E	P	E	P	E	P	E	P	E	P	E	P	E	P	E	P
305 L1	—	—	—	—	—	—	—	—	—	—	114	300	144	350	144	350	174	400
305 L2	65	160	84	200	84	200	94	250	94	250	114	300	144	350	—	—	—	—
305 L3	65	160	84	200	84	200	94	250	94	250	114	300	144	350	—	—	—	—
305 L4	65	160	84	200	84	200	94	250	94	250	114	300	144	350	—	—	—	—

	S1 + M1			S2 + ME2S			S3 + ME3S			S3 + ME3L			S4 + ME4/MX4			S5 + ME5S/MX5S			S5 + ME5L/MX5L		
	X1	X2	Y1	X1	X2	Y1	X1	X2	Y1	X1	X2	Y1	X1	X2	Y1	X1	X2	Y1	X1	X2	Y1
305 L1	—	—	—	—	—	—	—	—	—	—	—	—	460	—	258	574	—	310	552	—	310
305 L2	—	—	—	280	—	156	325	—	195	357	—	195	460	—	258	—	—	—	—	—	—
305 L3	253	314	138	280	—	156	325	—	195	357	—	195	460	—	258	—	—	—	—	—	—
305 L4	253	314	138	280	—	156	325	—	195	357	—	195	460	—	258	—	—	—	—	—	—

Bonfiglioli Riduttori

305 R

	Hydraulic motor										
	MG							542			Kg
cm³	050	080	100	125	160	200	250				
	M1							M2	M3	M4	
305 R2	162	167	171	175	181	188	—	113	60	1/4G	14

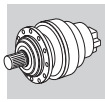

Metric

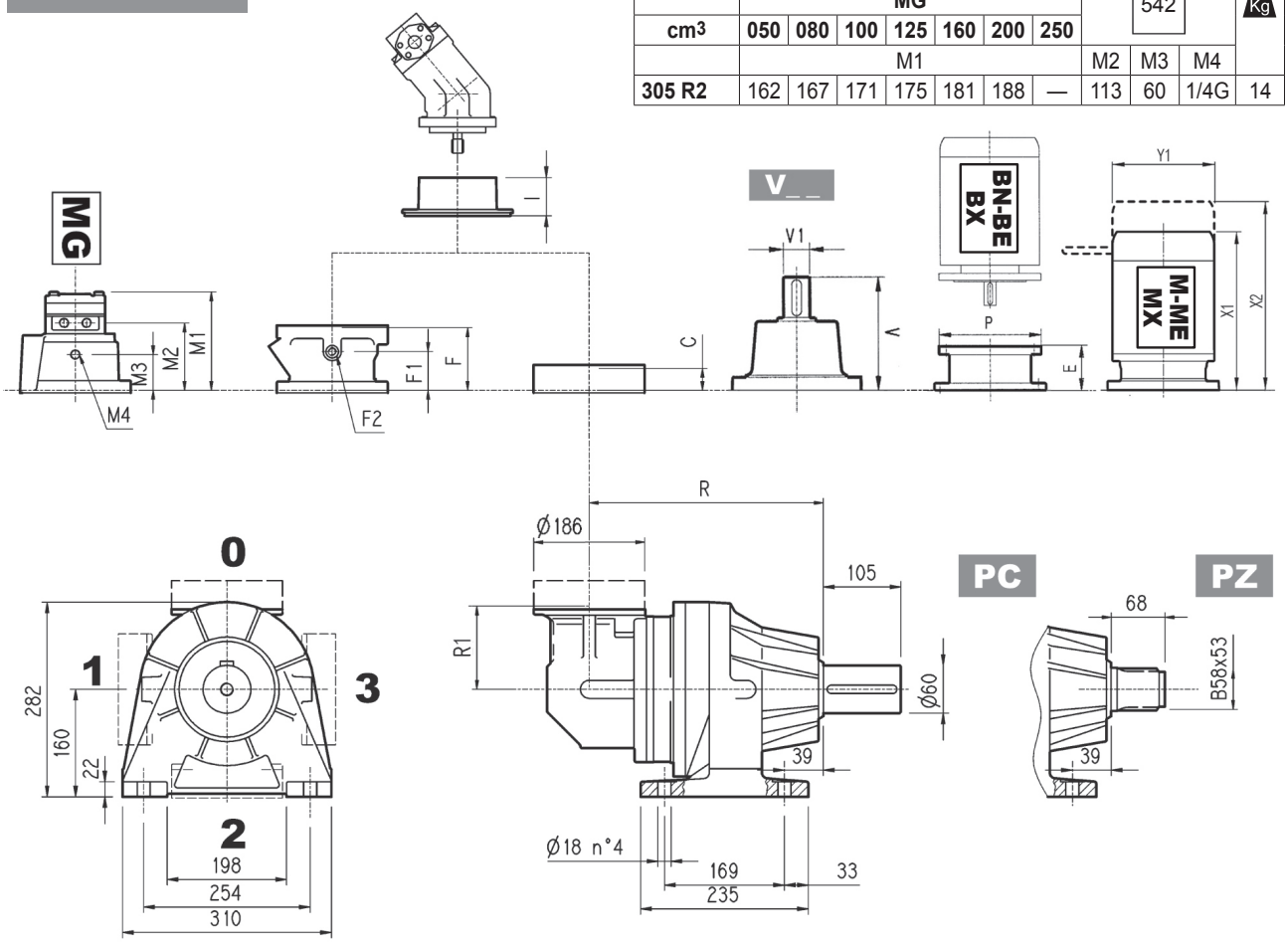

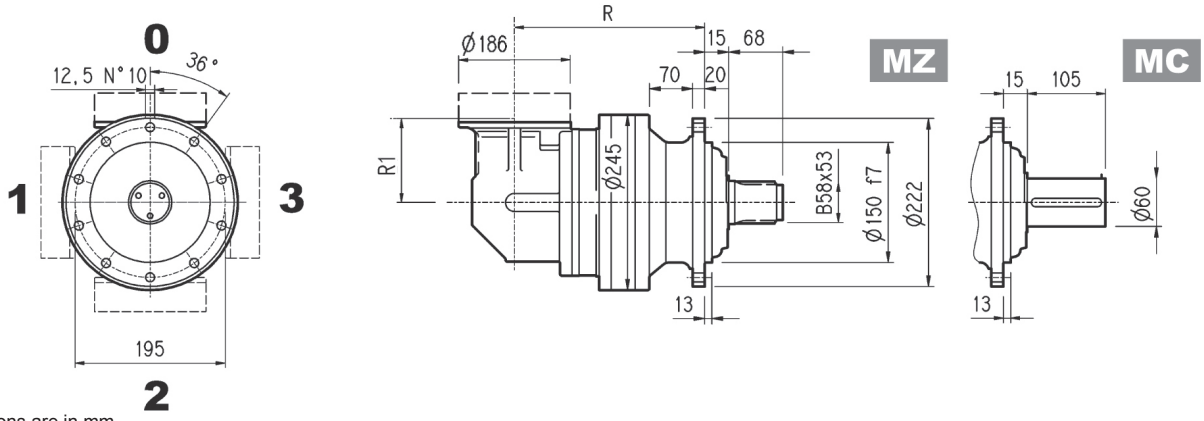

Dimensions are in mm

	R				R1	Kg			
	MC - MZ	PC - PZ	HC - HZ	FP - FZ - FDK		MC - MZ	PC - PZ	HC - HZ	FP - FZ - FDK
305 R2	235	375	260	235	140	56	65	60	56
305 R3	300	340	325	300	122	57	66	61	57
305 R4	353	393	378	353	122	61	70	65	61

	V	V1	Kg	V	V1	Kg	C	Input	I	F	F1	F2	Type	Input	Kg
305 R2	137.5	24	6	158	38	7	37	A		105	65	1/4 G	4	A	10
305 R3	137.5	24	6	158	38	7	37	A		105	65	1/4 G	4	A	10
305 R4	137.5	24	6	158	38	7	37	A	532	105	65	1/4 G	4	A	10

305 R

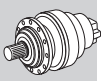

Metric

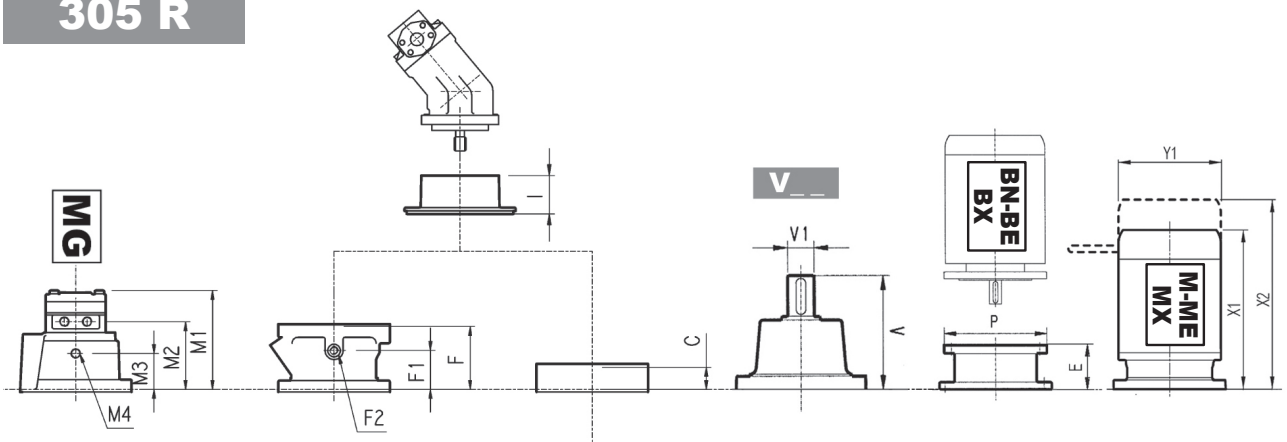

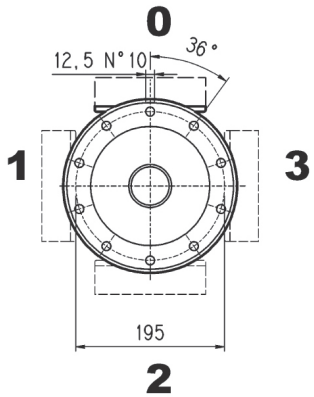

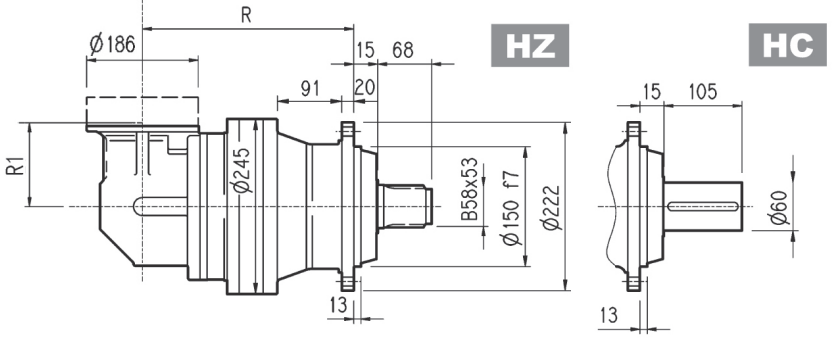

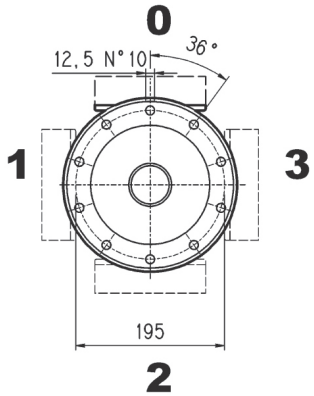

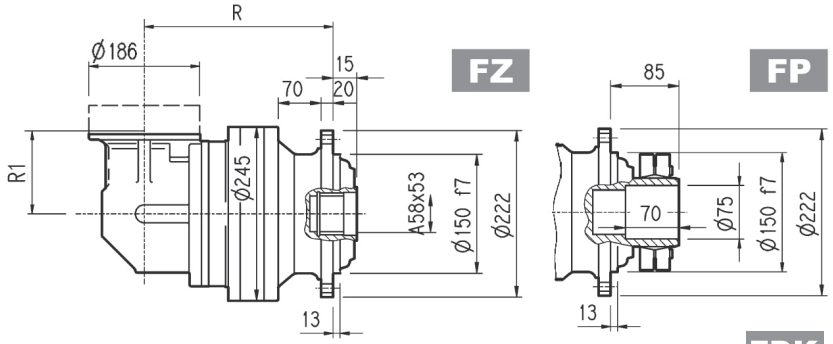

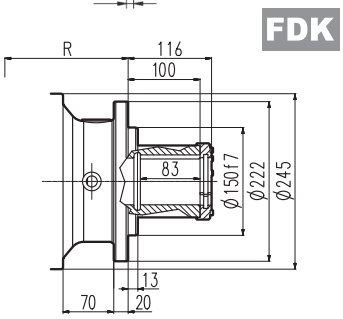

FP | **T_{2max} = 66,380 lb•in**

Dimensions are in mm

	P71		P80		P90		P100		P112		P132	
	E	P	E	P	E	P	E	P	E	P	E	P
305 R2	65	160	84	200	84	200	94	250	94	250	114	300
305 R3	65	160	84	200	84	200	94	250	94	250	114	300
305 R4	65	160	84	200	84	200	94	250	94	250	114	300

	S1 + M1			S2 + ME2S			S3 + ME3S			S3 + ME3L			S4 + ME4/MX4		
	X1	X2	Y1	X1	X2	Y1	X1	X2	Y1	X1	X2	Y1	X1	X2	Y1
305 R2	—	—	—	328	—	156	373	—	195	405	—	195	508	—	258
305 R3	253	314	138	328	—	156	373	—	195	405	—	195	508	—	258
305 R4	253	314	138	328	—	156	373	—	195	405	—	195	508	—	258

Bonfiglioli Riduttori

305 L

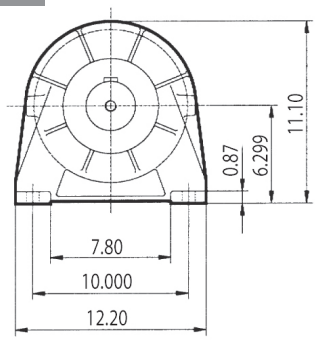

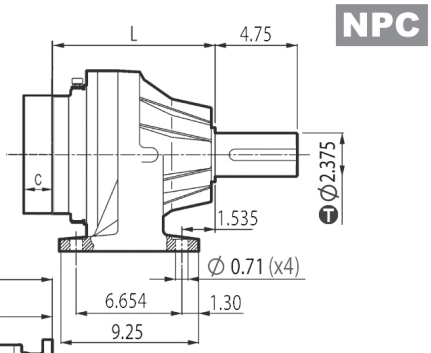

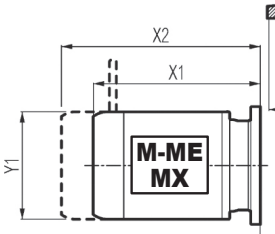

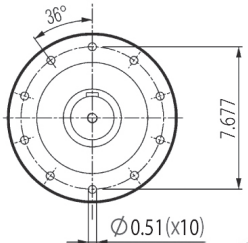

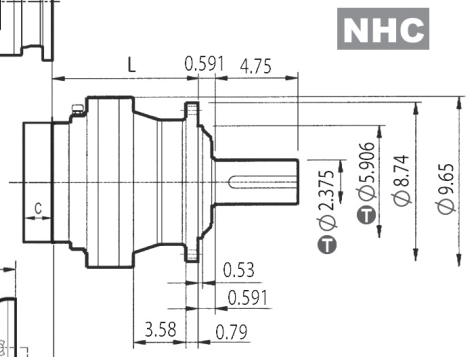

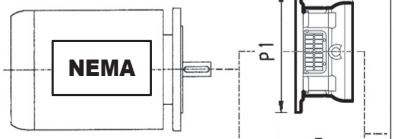

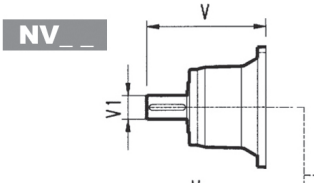

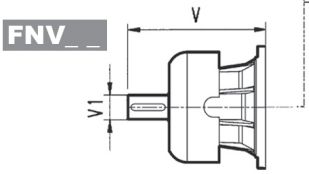

	PF N250TC		PF N280TC		PF N320TC		PF N360TC	
	E1	P1	E1	P1	E1	P1	E1	P1
305 L1*	8.661	15.748	8.661	15.748	9.843	15.748	10.236	17.717
305 L2	8.661	15.748	8.661	15.748	—	—	—	—
305 L3	8.661	15.748	8.661	15.748	—	—	—	—

(*): for NPC versions contact Bonfiglioli Technical Service
NOTE: for R design contact Bonfiglioli Technical Service
for PF N400TC contact Bonfiglioli Technical Service

inch	T
5.906	-0.00169 / -0.00327
2.375	0 / -0.00075

Dimensions are in Inch except when shown in *italic [mm]*

	L		lbs	
	NPC	NHC	NPC	NHC
305 L1	7.20	6.61	99.2	88.2
305 L2	9.76	9.17	114.7	103.6
305 L3	11.85	11.26	123.5	112.5
305 L4	13.94	13.35	132.3	121.3

	V	V1	lbs	V	V1	lbs	V	V1	lbs	C	Input
305 L1	9.681	1.875	33.1	—	—	—	11.138	1.875	38.0	1.457	A
305 L2	5.996	1.125	13.2	6.437	1.625	15.4	—	—	—	1.457	A
305 L3	5.996	1.125	13.2	6.437	1.625	15.4	—	—	—	1.457	A
305 L4	5.996	1.125	13.2	6.437	1.625	15.4	—	—	—	1.457	A

	N56C		N140TC		N180TC		N210TC		N250TC		N280TC	
	E	P	E	P	E	P	E	P	E	P	E	P
305 L1	—	—	—	—	—	—	—	—	5.22	11.81	6.22	13.78
305 L2	4.51	6.70	4.51	6.70	5.22	8.82	5.22	8.82	5.22	8.82	6.12	11.81
305 L3	4.51	6.70	4.51	6.70	5.22	8.82	5.22	8.82	5.22	8.82	6.12	11.81
305 L4	4.51	6.70	4.51	6.70	5.22	8.82	5.22	8.82	5.22	8.82	6.12	11.81

	S1 + M1			S2 + ME2S			S3 + ME3S			S3 + ME3L			S4 + ME4/MX4			S5 + ME5S/MX5S			S5 + ME5L/MX5L		
	X1	X2	Y1	X1	X2	Y1	X1	X2	Y1	X1	X2	Y1	X1	X2	Y1	X1	X2	Y1	X1	X2	Y1
305 L1	—	—	—	—	—	—	—	—	—	—	—	—	18.11	—	10.16	22.60	—	12.20	21.73	—	12.20
305 L2	—	—	—	11.02	—	6.14	12.80	—	7.68	14.06	—	7.68	18.11	—	10.16	—	—	—	—	—	—
305 L3	9.96	12.36	5.43	11.02	—	6.14	12.80	—	7.68	14.06	—	7.68	18.11	—	10.16	—	—	—	—	—	—
305 L4	9.96	12.36	5.43	11.02	—	6.14	12.80	—	7.68	14.06	—	7.68	18.11	—	10.16	—	—	—	—	—	—

305 R

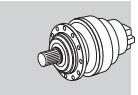

Imperial

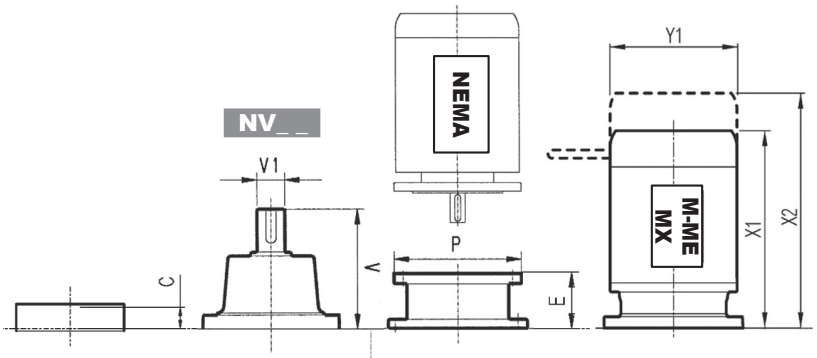

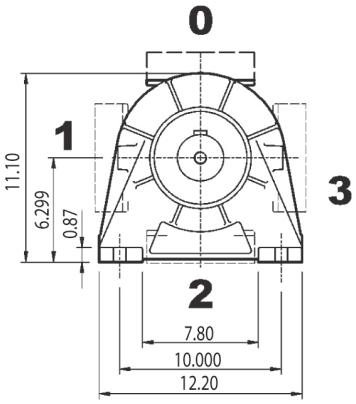

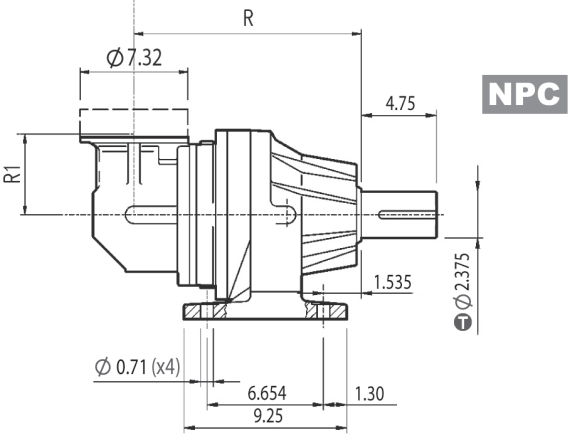

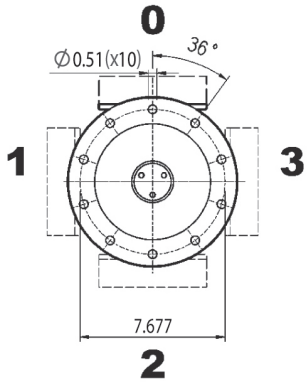

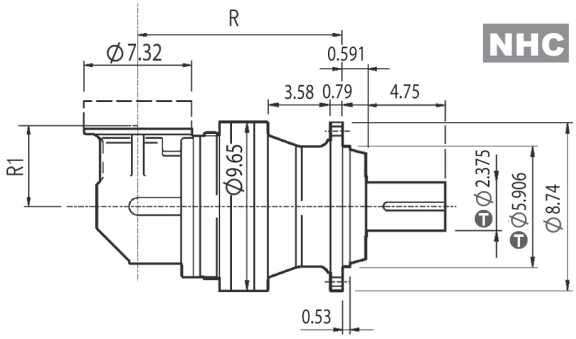

inch	T
5.906	-0.00169 -0.00327
2.375	0 -0.00075

Dimensions are in Inch except when shown in *italic [mm]*

	R		R1	lbs	
	NPC	NHC		NPC	NHC
305 R2	14.76	10.24	5.51	143.3	132.3
305 R3	13.39	12.80	4.80	145.5	134.5
305 R4	15.47	14.88	4.80	154.4	143.3

	V	V1	lbs	V	V1	lbs	C	Input
305 R2	5.996	1.125	13.2	6.437	1.625	15.4	1.457	A
305 R3	5.996	1.125	13.2	6.437	1.625	15.4	1.457	A
305 R4	5.996	1.125	13.2	6.437	1.625	15.4	1.457	A

	N56C		N140TC		N180TC		N210TC		N250TC		N280TC	
	E	P	E	P	E	P	E	P	E	P	E	P
305 R2	4.51	6.70	4.51	6.70	5.22	8.82	5.22	8.82	5.22	8.82	6.12	11.81
305 R3	4.51	6.70	4.51	6.70	5.22	8.82	5.22	8.82	5.22	8.82	6.12	11.81
305 R4	4.51	6.70	4.51	6.70	5.22	8.82	5.22	8.82	5.22	8.82	6.12	11.81

	S1 + M1			S2 + ME2S			S3 + ME3S			S3 + ME3L			S4 + ME4/MX4		
	X1	X2	Y1	X1	X2	Y1	X1	X2	Y1	X1	X2	Y1	X1	X2	Y1
305 R2	—	—	—	12.91	—	6.14	14.68	—	7.68	15.94	—	7.68	20	—	10.16
305 R3	9.96	12.36	5.43	12.91	—	6.14	14.68	—	7.68	15.94	—	7.68	20	—	10.16
305 R4	9.96	12.36	5.43	12.91	—	6.14	14.68	—	7.68	15.94	—	7.68	20	—	10.16

Bonfiglioli Riduttori

3/V 05 L3

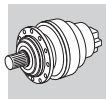

Metric

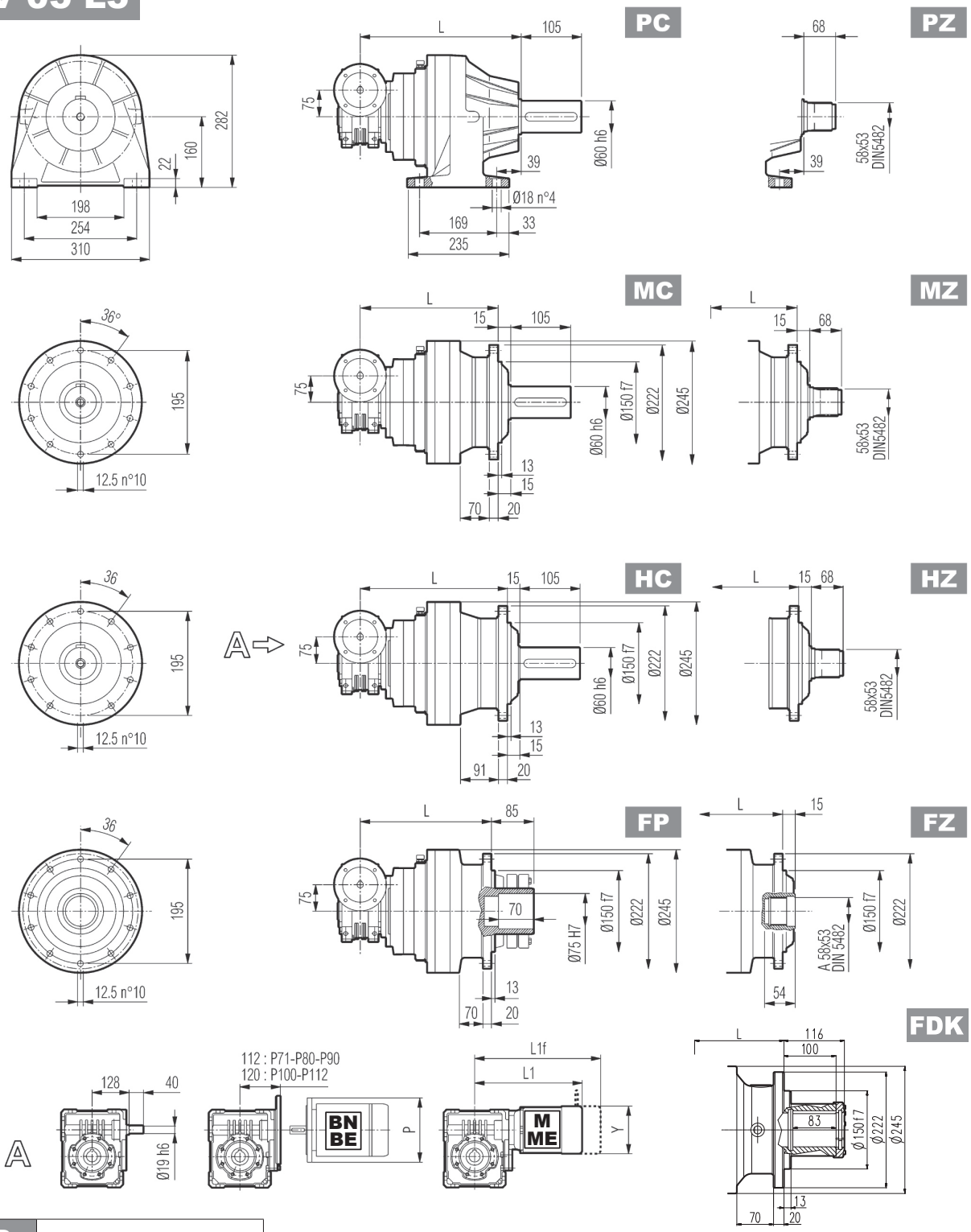

FP	T_{2max} = 66,380 lb•in

Dimensions are in mm

	L				Kg				P71	P80	P90	P100
	MC - MZ	PC - PZ	HC - HZ	FP - FZ - FDK	MC - MZ	PC - PZ	HC - HZ	FP - FZ - FDK	P	P	P	P
3/V 05 L3	323	363	348	323	51	60	55	51	160	200	200	250

	S1 + M1			S2 + ME2S			S3 + ME3S			S3 + ME3L		
	L1	L1f	Y	L1	L1f	Y	L1	L1f	Y	L1	L1f	Y
3/V 05 L3	308	369	138	333	—	156	376	—	193	408	—	193

3/V 05 L3

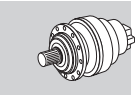

Imperial

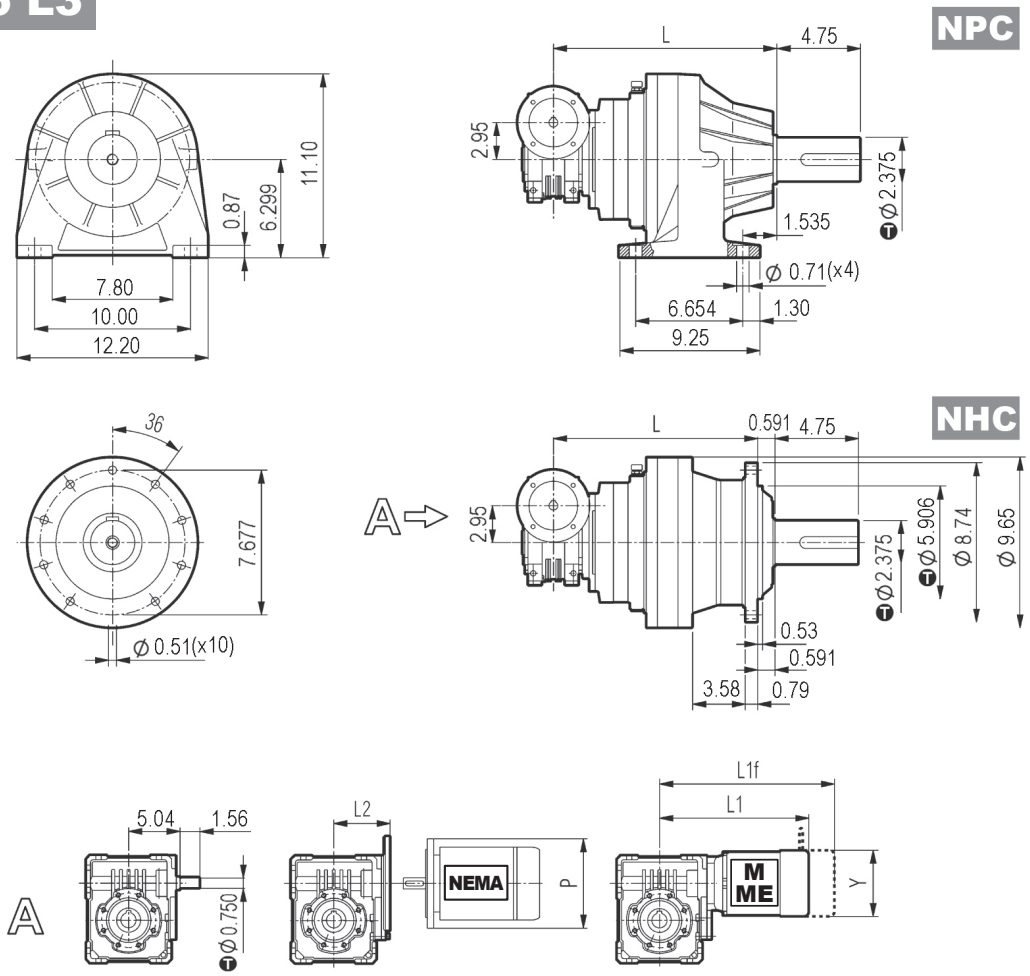

inch	T
5.906	-0.00169 -0.00327
2.375	0 -0.00075
1.000	0 -0.00051

Dimensions are in Inch except when shown in *italic [mm]*

	L		lbs		N56 C	N140TC	N180TC
	NPC	NHC	NPC	NHC	P	P	P
3/V 05 L3	14.29	13.70	132.3	121.3	6.54	6.54	9.02

	S1 + M1			S2 + ME2S			S3 + ME3S			S3 + ME3L		
	L1	L1f	Y	L1	L1f	Y	L1	L1f	Y	L1	L1f	Y
3/V 05 L3	12.12	14.53	5.43	13.11	—	6.14	14.80	—	7.60	16.06	—	7.60

Bonfiglioli Riduttori

3/A 05 L2

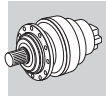

Metric

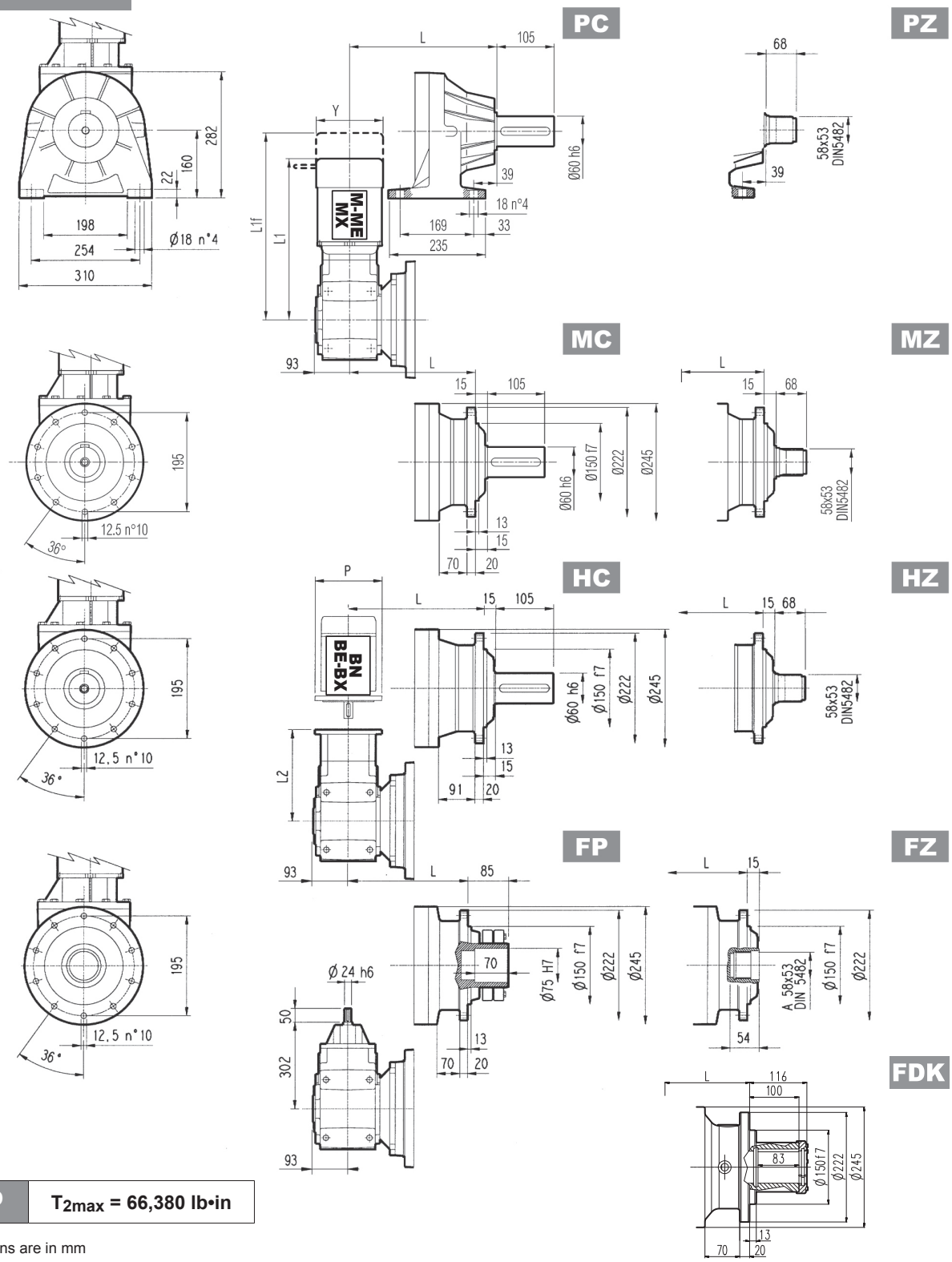

FP	T_{2max} = 66,380 lb•in

Dimensions are in mm

	L				Kg			
	MC - MZ	PC - PZ	HC - HZ	FP - FZ - FDK	MC - MZ	PC - PZ	HC - HZ	FP - FZ - FDK
3/A 05 L2	276	316	301	276	90	105	100	90

	P63		P71		P80		P90		P100		P112		P132	
	L2	P	L2	P	L2	P	L2	P	L2	P	L2	P	L2	P
3/A 05 L2	263	140	263	160	282.5	200	282.5	200	292.5	250	292.5	250	329	457

	S1 + M1			S2 + ME2S			S3 + ME3S			S3 + ME3L			S4 + ME4/MX4		
	L1	L1f	Y	L1	L1f	Y	L1	L1f	Y	L1	L1f	Y	L1	L1f	Y
3/A 05 L2	418	439	138	447	—	156	490	—	195	522	—	195	630	—	258

3/A 05 L2

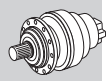

Imperial

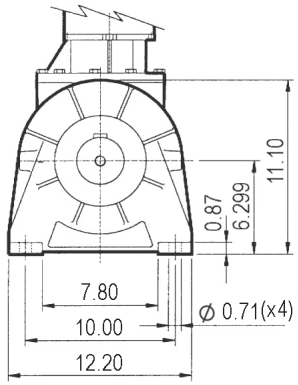

NPC

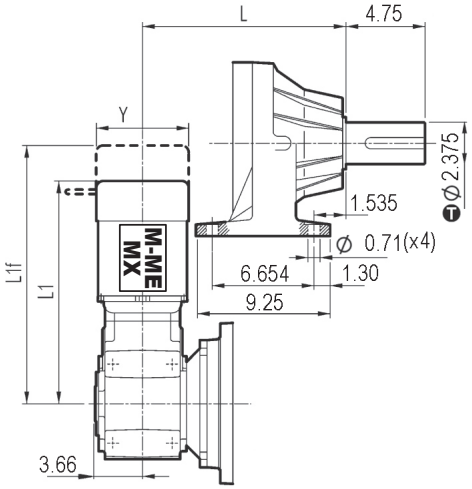

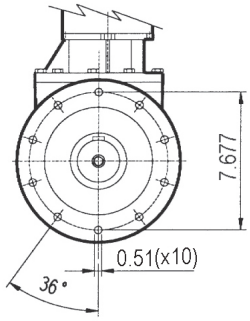

NHC

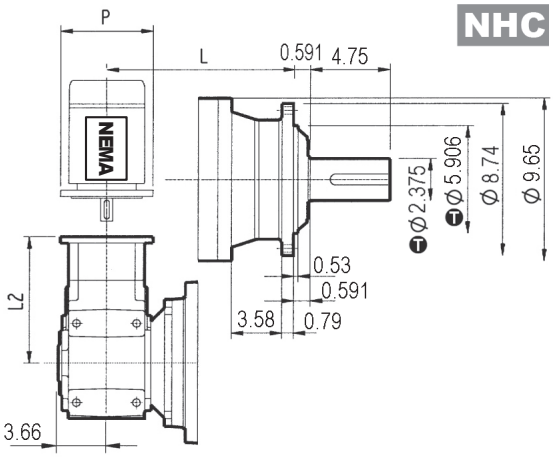

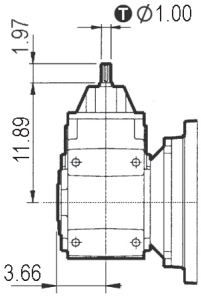

inch	Ⓣ
5.906	-0.00169 -0.00327
2.375	0 -0.00075
1.000	0 -0.00051

Dimensions are in Inch except when shown in *italic [mm]*

	L		lbs		N56C		N140TC		N180TC		N210TC	
	NPC	NHC	NPC	NHC	L2	P	L2	P	L2	P	L2	P
3/A 05 L2	12.44	11.85	231.5	220.5	11.14	6.50	11.14	6.50	11.89	9.00	13.13	9.00

	S1 + M1			S2 + ME2S			S3 + ME3S			S3 + ME3L			S4 + ME4/MX4		
	L1	L1f	Y	L1	L1f	Y	L1	L1f	Y	L1	L1f	Y	L1	L1f	Y
3/A 05 L2	16.46	17.28	5.43	17.60	—	6.14	19.29	—	7.68	20.55	—	7.68	24.80	—	10.16

305 L | 305 R | 3/V 05 L3 | 3/A 05 L2

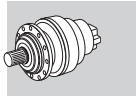

Metric

Imperial

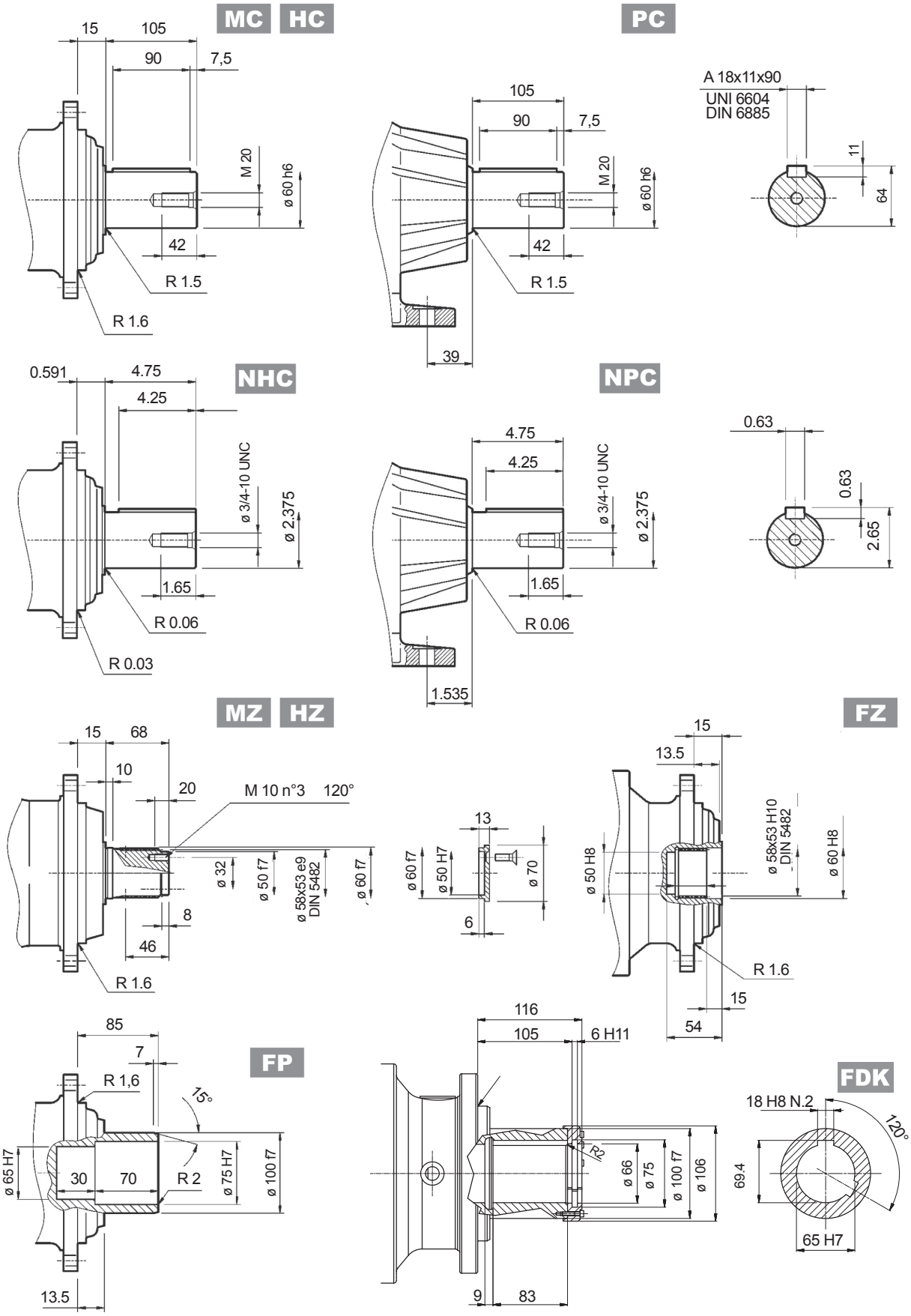

FP	T_{2max} = 66,380 lb•in

Dimensions are in mm when shown in italic, otherwise dimensions are in inches

inch	T
2.375	0 / -0.00075

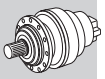

Flange

W0A

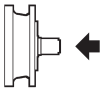

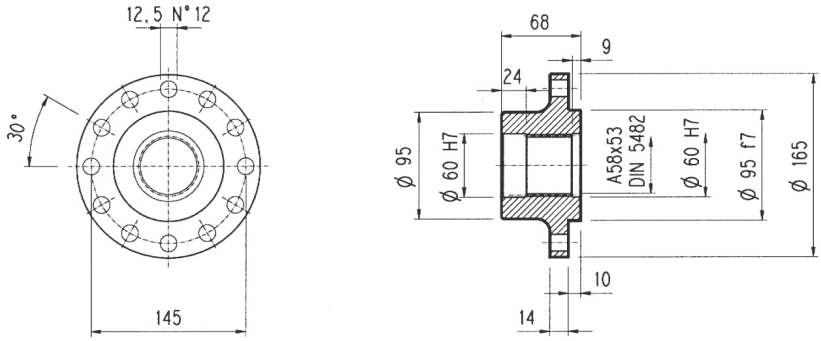

Material: Steel C40

Dimensions are in mm

Pinions

P...

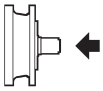

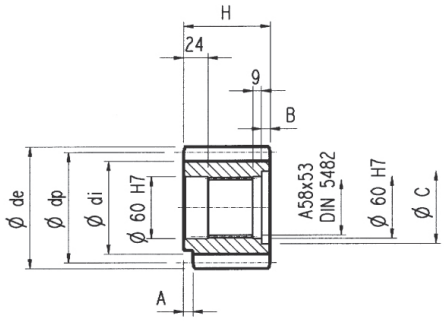

Dimensions are in mm

α = 20°

	m	z	x	dp	di	de	H	A	B	C	Material
PCL1	5	19	—	95	82	104	77	12	9	72	Steel 39NiCrMo3 hardened and tempered
PCL2	5	19	—	95	82	104	68	—	—	—	
PCM	5	20	—	100	87.5	110	68	18	—	—	Steel 18NiCrMo5 case hardened
PCP	5	22	—	110	97.5	120	68	18	—	—	
PDE	6	14	0.500	84	75	99.6	68	—	—	—	Steel 39NiCrMo3 hardened and tempered
PDI	6	18	0.500	108	99	123.6	68	—	—	—	
PDM	6	20	0.833	120	115	140	68	—	—	—	
PFD	8	13	0.675	104	95	127.6	68	—	—	—	Steel 18NiCrMo5 case hardened
PFE1	8	14	—	112	92	126	68	—	—	—	
PFE2	8	14	—	112	92	126	80	—	12	72	
PFF	8	15	—	120	100	136	68	—	—	—	Steel 39NiCrMo3 hardened and tempered
PFP	8	22	—	176	156	190	77	12	10	71	
PHG	10	16	0.500	160	145	188	75	—	7	72	

Sleeve coupling

M0A

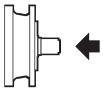

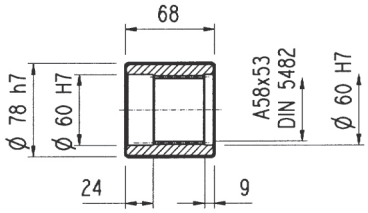

Material: Steel 16CrNi4

Dimensions are in mm

Splined bars

B0A

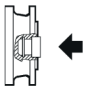

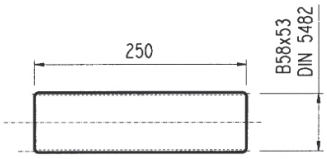

Material: Case hardening steel 18NiCrMo5 UNI 5331
must be case hardened 50-55 HRC

Shrink disc

G0A

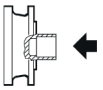

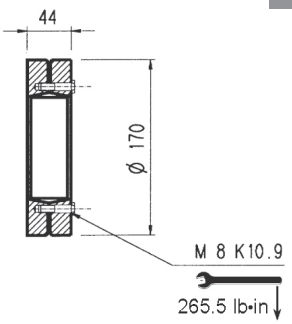

Dimensions are in mm

305 L 305 R

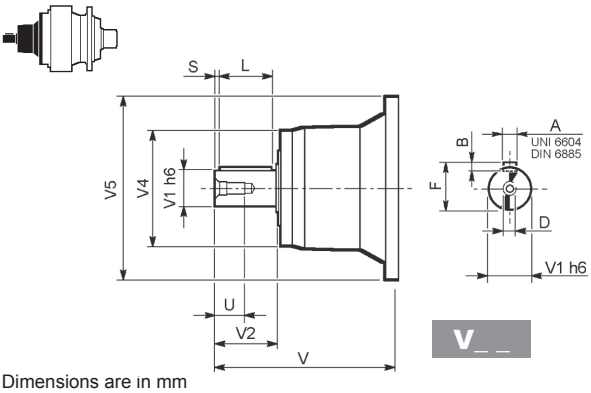

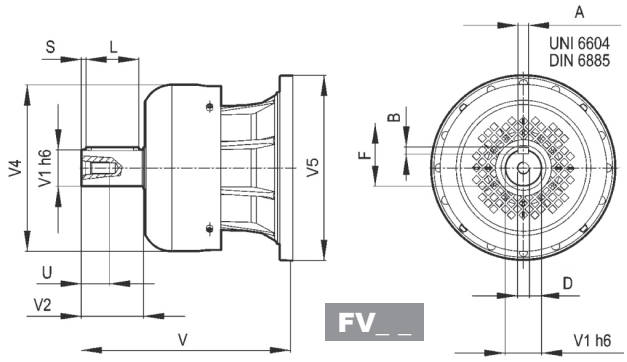

Dimensions are in mm

		V	V1	V2	V4	V5	A	B	F	L	S	D	U
305 L1	**V05B**	239	48	82	155	245	14	9	51.5	70	6	M16	36
	FV05B	276	48	82	219.5	244	14	9	51.5	70	6	M16	36
305 L2	**V01A**	137.5	24	36	120	186	8	7	27	30	3	M8	19
	V01B	158	38	58	120	186	10	8	41	50	4	M12	28
305 L3	**V01A**	137.5	24	36	120	186	8	7	27	30	3	M8	19
	V01B	158	38	58	120	186	10	8	41	50	4	M12	28
305 L4	**V01A**	137.5	24	36	120	186	8	7	27	30	3	M8	19
	V01B	158	38	58	120	186	10	8	41	50	4	M12	28
305 R2-R3-R4	**V01A**	137.5	24	36	120	186	8	7	27	30	3	M8	19
	V01B	158	38	58	120	186	10	8	41	50	4	M12	28

305 L 305 R

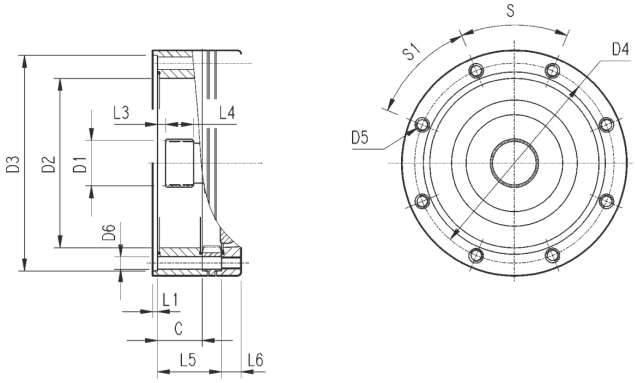

Dimensions are in mm

		C	D1	D2	D3	D4	D5	D6	L1	L2	L3	L4	L5	L6	S	S1	Input
305 L1	**V9AA**	37	40x36 DIN5482	140	178 H7	165	M10 n°8	11	4	—	9	18	—	18	45°	45°	A
305 L2	**V9AA**	37	40x36 DIN5482	140	178 H7	165	M10 n°8	11	4	—	9	18	65	18	45°	45°	A
305 L3	**V9AA**	37	40x36 DIN5482	140	178 H7	165	M10 n°8	11	4	—	9	18	118	18	45°	45°	A
305 L4	**V9AA**	37	40x36 DIN5482	140	178 H7	165	M10 n°8	11	4	—	9	18	171	18	45°	45°	A
305 R2-R3-R4	**V9AA**	37	40x36 DIN5482	140	178 H7	165	M10 n°8	11	4	—	9	18	37	18	45°	45°	A

3/V 05 L3

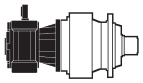

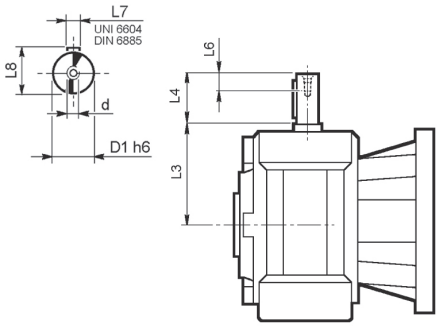

Dimensions are in mm

	D1 h6	L3	L4	L6	L7	L8	d
3/V 05 L3_HS	19	128	40	16	6	21.5	M6

3/A 05 L2

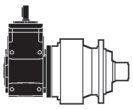

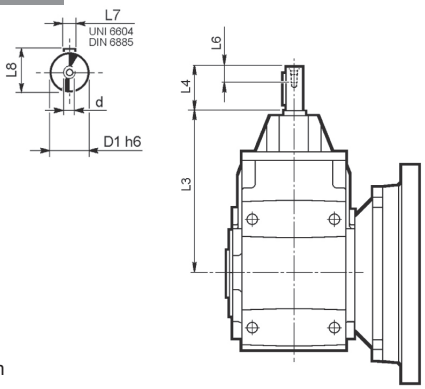

Dimensions are in mm

	D1 h6	L3	L4	L6	L7	L8	d
3/A 05 L2_HS	24	302	50	19	8	27	M8

305 L 305 R

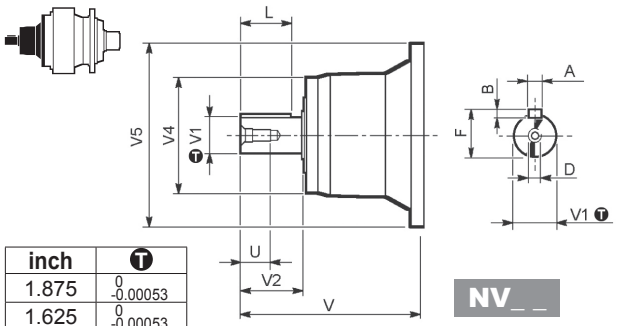

inch	T
1.875	0 -0.00053
1.625	0 -0.00053
1.125	0 -0.00051

NV_ _

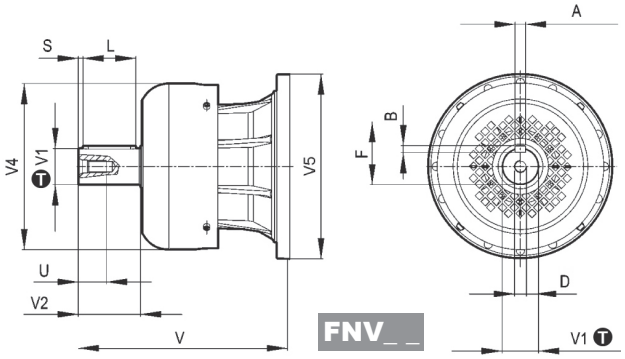

FNV_ _

Dimensions are in Inch except when shown in *italic [mm]*

		V	V1	V2	V4	V5	A	B	F	L	D	U
305 L1	**NV05B**	9.681	1.875	3.500	6.417	9.606	0.500	0.500	2.091	3.000	5/8-11 UNC	1.417
	FNV05B	11.138	1.875	3.500	8.641	9.606	0.500	0.500	2.091	3.000	5/8-11 UNC	1.417
305 L2	**NV01A**	5.996	1.125	2.000	4.980	7.323	0.250	0.250	1.236	1.752	3/8-16 UNC	0.866
	NV01B	6.437	1.625	2.500	4.980	7.323	0.375	0.375	1.791	2.000	1/2-13 UNC	1.102
305 L3	**NV01A**	5.996	1.125	2.000	4.980	7.323	0.250	0.250	1.236	1.752	3/8-16 UNC	0.866
	NV01B	6.437	1.625	2.500	4.980	7.323	0.375	0.375	1.791	2.000	1/2-13 UNC	1.102
305 L4	**NV01A**	5.996	1.125	2.000	4.980	7.323	0.250	0.250	1.236	1.752	3/8-16 UNC	0.866
	NV01B	6.437	1.625	2.500	4.980	7.323	0.375	0.375	1.791	2.000	1/2-13 UNC	1.102
305 R2-R3-R4	**NV01A**	5.996	1.125	2.000	4.980	7.323	0.250	0.250	1.236	1.752	3/8-16 UNC	0.866
	NV01B	6.437	1.625	2.500	4.980	7.323	0.375	0.375	1.791	2.000	1/2-13 UNC	1.102

305 L 305 R

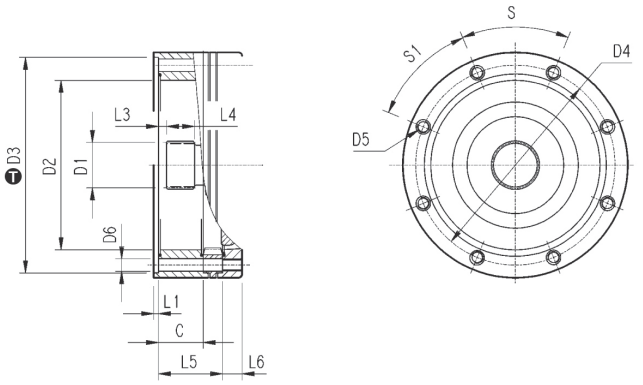

inch	T
7.01	+0.00157 0

Dimensions are in Inch except when shown in *italic [mm]*

		C	D1	D2	D3	D4	D5	D6	L1	L2	L3	L4	L5	L6	S	S1	Input
305 L1	**V9AA**	1.46	*40x36 DIN5482*	5.51	7.01	6.50	*M10 n°8*	0.43	0.16	—	0.35	0.71	—	0.71	45°	45°	A
305 L2	**V9AA**	1.46	*40x36 DIN5482*	5.51	7.01	6.50	*M10 n°8*	0.43	0.16	—	0.35	0.71	2.56	0.71	45°	45°	A
305 L3	**V9AA**	1.46	*40x36 DIN5482*	5.51	7.01	6.50	*M10 n°8*	0.43	0.16	—	0.35	0.71	4.65	0.71	45°	45°	A
305 L4	**V9AA**	1.46	*40x36 DIN5482*	5.51	7.01	6.50	*M10 n°8*	0.43	0.16	—	0.35	0.71	6.73	0.71	45°	45°	A
305 R2-R3-R4	**V9AA**	1.46	*40x36 DIN5482*	5.51	7.01	6.50	*M10 n°8*	0.43	0.16	—	0.35	0.71	1.46	0.71	45°	45°	A

3/V 05 L3

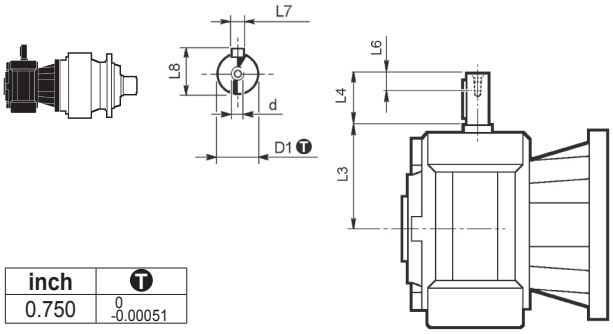

inch	T
0.750	0 -0.00051

Dimensions are in Inch except when shown in *italic [mm]*

	D1	L3	L4	L6	L7	L8	d
3/V 05 L3_NHS	0.750	5.04	1.575	0.63	0.188	0.832	1/4-20UNC

3/A 05 L2

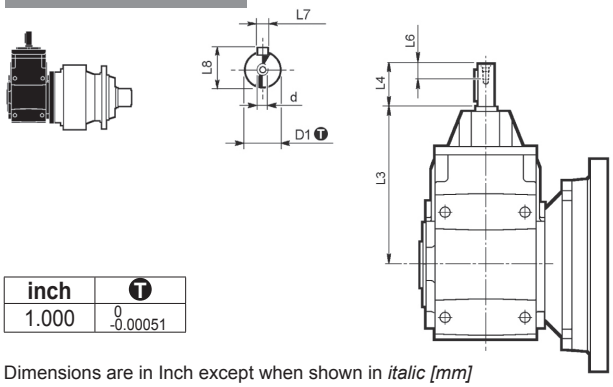

inch	T
1.000	0 -0.00051

Dimensions are in Inch except when shown in *italic [mm]*

	D1	L3	L4	L6	L7	L8	d
3/A 05 L2_NHS	1.000	11.89	1.969	0.75	0.250	1.109	3/8-16UNC

Permissible radial and axial loads on output shaft with $Fh_2 : n_2 \cdot h = 100000$

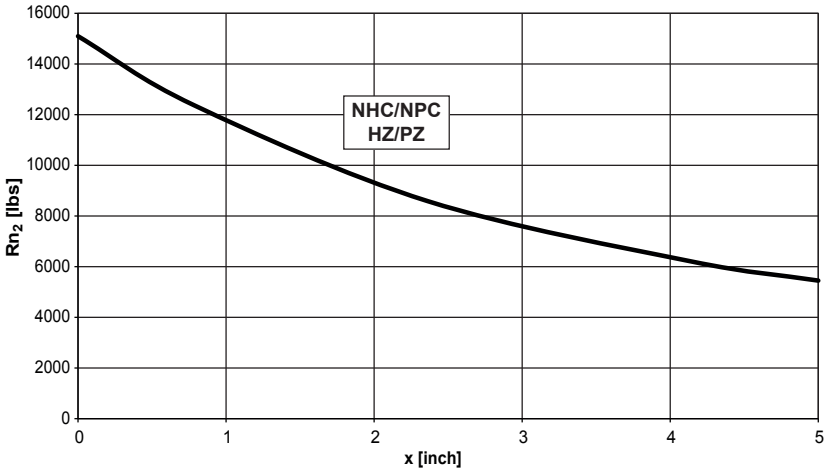

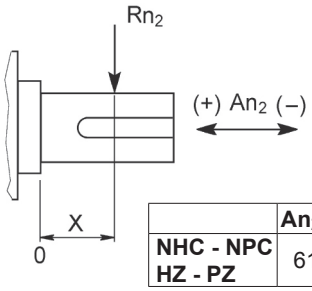

	An2 (+)	An2 (-)
NHC - NPC HZ - PZ	6182	4945

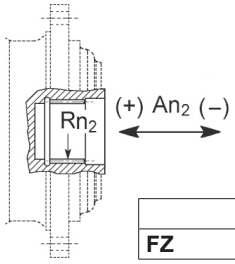

	Rn2	An2 (+/-)
FZ	2504	2609

Load corrective factor fh_2 on shafts	$Fh_2 = n_2 \cdot h$		10000	25000	50000	100000	500000	1000000
	fh_2	FZ	**2.15**	**1.59**	**1.26**	**1.00**	**0.58**	**0.46**
		NHC - NPC - HZ -PZ	**1.48**	**1.48**	**1.23**	**1.00**	**0.62**	**0.50**

Permissible radial loads on input shaft with $Fh_1 : n_1 \cdot h = 250000$

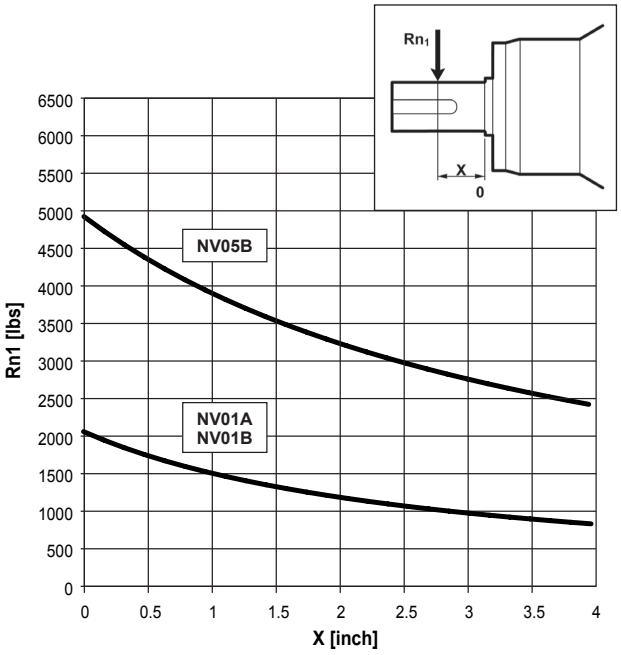

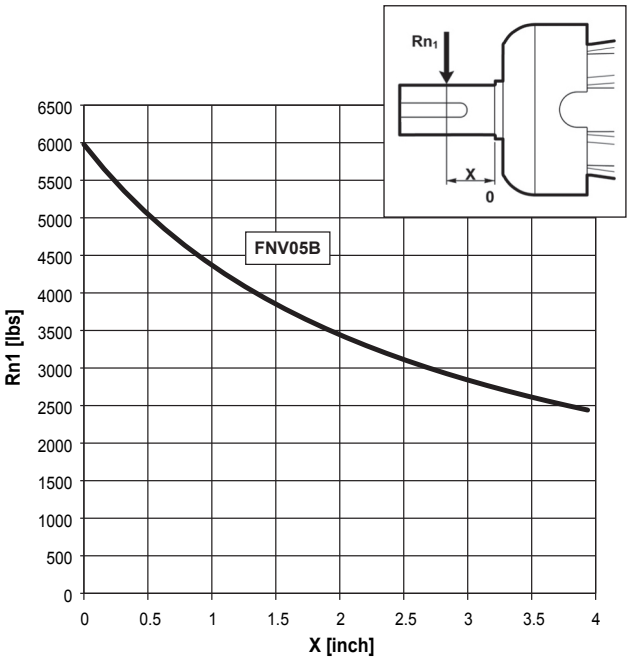

Load corrective factor fh_1 on shafts	$Fh_1 = n_1 \cdot h$	250000	500000	1000000	2000000	5000000	10000000
	fh_1	**1**	**0.79**	**0.63**	**0.50**	**0.37**	**0.29**

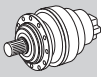

305 VK

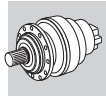

Metric

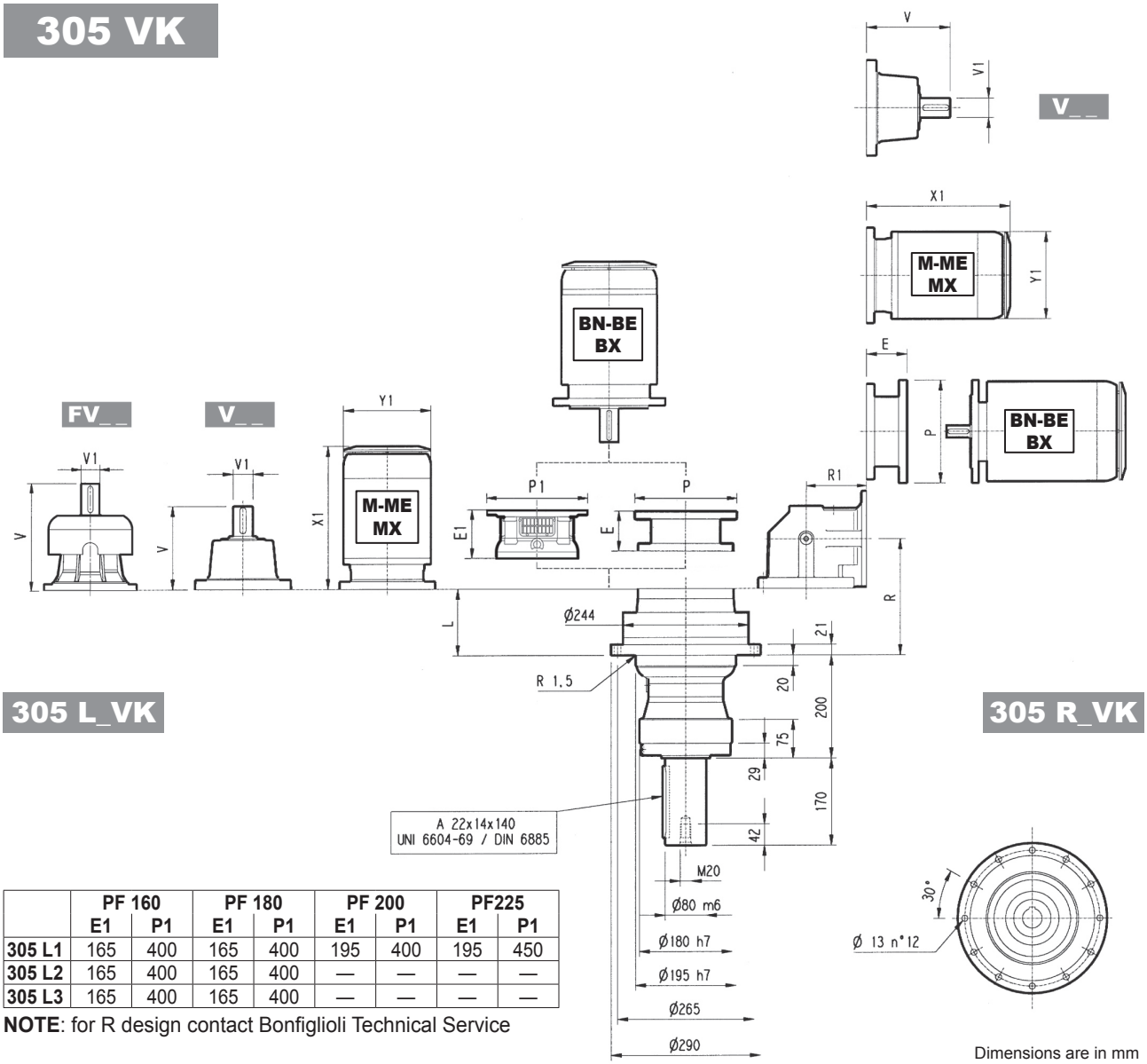

	PF 160		PF 180		PF 200		PF225	
	E1	P1	E1	P1	E1	P1	E1	P1
305 L1	165	400	165	400	195	400	195	450
305 L2	165	400	165	400	—	—	—	—
305 L3	165	400	165	400	—	—	—	—

NOTE: for R design contact Bonfiglioli Technical Service

Dimensions are in mm

	L	Kg	V	V1	Kg	V	V1	Kg	V	V1	Kg	V	V1	Kg	P71		P80		P90		P100		P112		P132		P160		P180		P200	
															E	P	E	P	E	P	E	P	E	P	E	P	E	P	E	P	E	P
305 L1	69	70	239	48	15	—	—	—	276	48	17	—	—	—	—	—	—	—	—	—	—	—	—	—	114	300	144	350	144	350	174	400
305 L2	134	77	137.5	24	6	158	38	7	—	—	—	—	—	—	65	160	84	200	84	200	94	250	94	250	114	300	144	350	—	—	—	—
305 L3	187	81	137.5	24	6	158	38	7	—	—	—	—	—	—	65	160	84	200	84	200	94	250	94	250	114	300	144	350	—	—	—	—
305 L4	240	85	137.5	24	6	158	38	7	—	—	—	—	—	—	65	160	84	200	84	200	94	250	94	250	114	300	144	350	—	—	—	—

	S1 + M1			S2 + ME2S			S3 + ME3S			S3 + ME3L			S4 + ME4/MX4			S5 + ME5S/MX5S			S5 + ME5L/MX5L		
	X1	X2	Y1	X1	X2	Y1	X1	X2	Y1	X1	X2	Y1	X1	X2	Y1	X1	X2	Y1	X1	X2	Y1
305 L1	—	—	—	—	—	—	—	—	—	—	—	—	460	—	258	552	—	310	596	—	310
305 L2	—	—	—	280	—	156	325	—	195	357	—	195	460	—	258	—	—	—	—	—	—
305 L3	253	314	138	280	—	156	325	—	195	357	—	195	460	—	258	—	—	—	—	—	—
305 L4	253	314	138	280	—	156	325	—	195	357	—	195	460	—	258	—	—	—	—	—	—

	R	R1	Kg	V	V1	Kg	V	V1	Kg	P71		P80		P90		P100		P112		P132	
										E	P	E	P	E	P	E	P	E	P	E	P
305 R2	161	140	90	137.5	24	6	158	38	7	65	160	84	200	84	200	94	250	94	250	114	300
305 R3	226	122	92	137.5	24	6	158	38	7	65	160	84	200	84	200	94	250	94	250	114	300
305 R4	279	122	95	137.5	24	6	158	38	7	65	160	84	200	84	200	94	250	94	250	114	300

	S1 + M1			S2 + ME2S			S3 + ME3S			S3 + ME3L			S4 + ME4/MX4		
	X1	X2	Y1	X1	X2	Y1	X1	X2	Y1	X1	X2	Y1	X1	X2	Y1
305 R2	—	—	—	328	—	156	373	—	195	405	—	195	508	—	258
305 R3	253	314	138	328	—	156	373	—	195	405	—	195	508	—	258
305 R4	253	314	138	328	—	156	373	—	195	405	—	195	508	—	258

305 VK

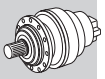

Metric

The diagram below allows the calculation of permitted overhung load R_{x2} on the output shaft of gearbox, with radial force applying at a distance x from shaft shoulder.
The curves are relevant to value resulting from the relationship of trust load A_{n2} to radial load R_{n2}, based on n_2 = 10 rpm and 10000 hrs theoretical lifetime.

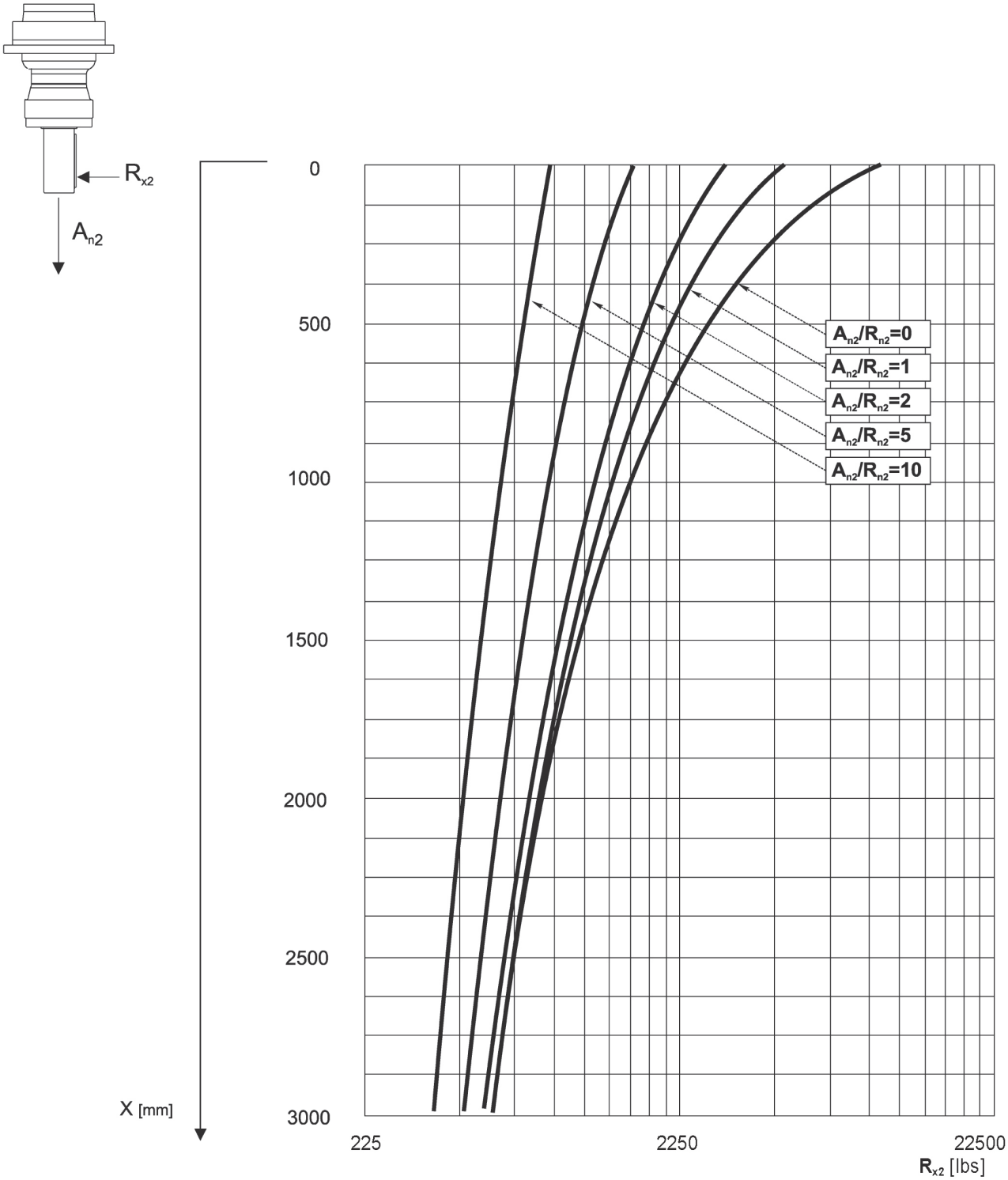

306 L

	Hydraulic motor										
	MG							542			Kg
cm³	050	080	100	125	160	200	250				
	M1							M2	M3	M4	
306 L2	—	—	—	—	203	210	219	135	77	1/4G	20

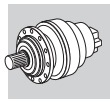

Metric

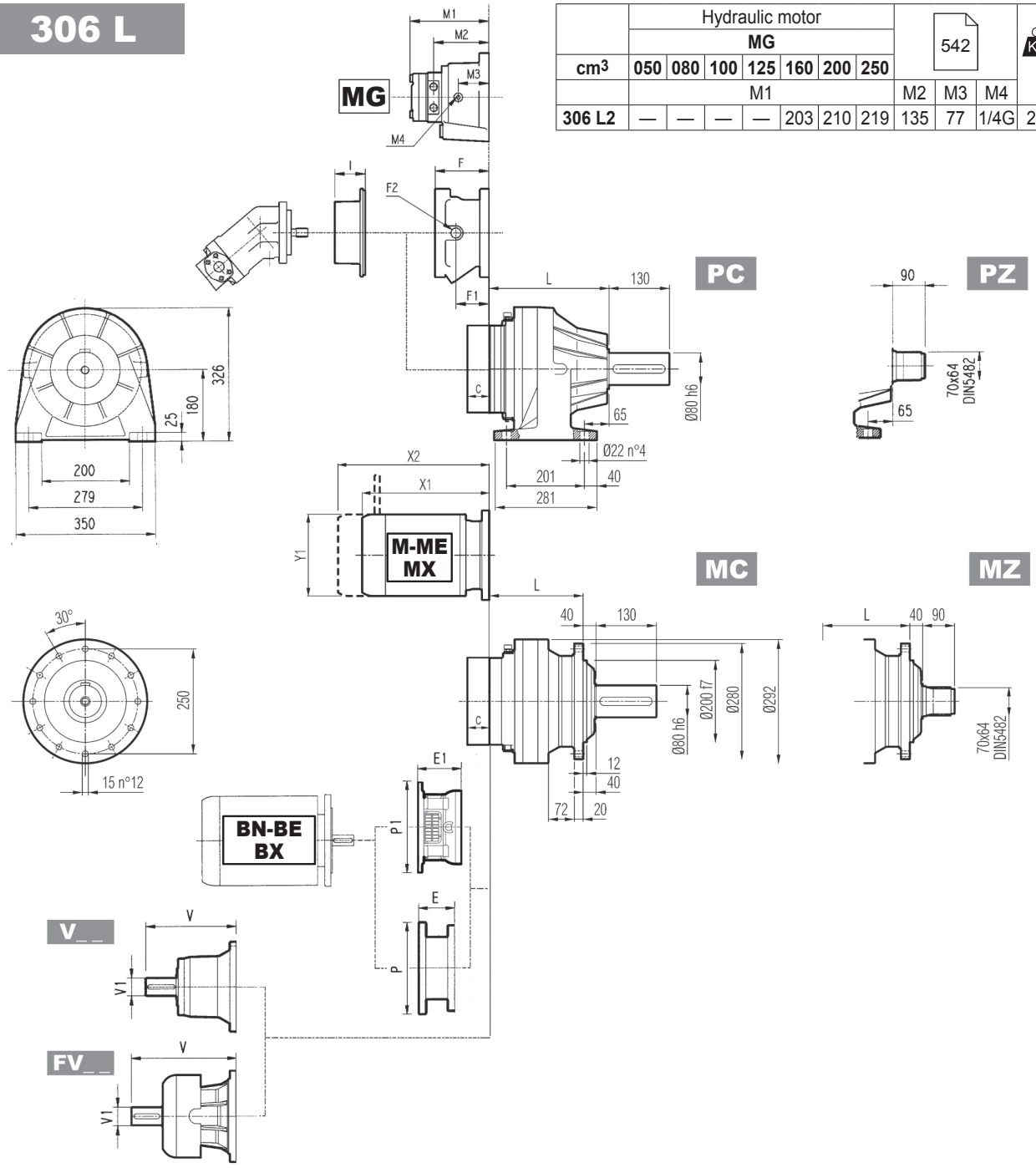

Dimensions are in mm

	L				Kg			
	MC - MZ	PC - PZ	HC - HZ	FP - FZ - FDK	MC - MZ	PC - PZ	HC - HZ	FP - FZ - FDK
306 L1	160	235	195	160	65	85	70	65
306 L2	225	300	260	225	74	95	79	74
306 L3	278	353	313	278	78	98	83	78
306 L4	331	406	366	331	82	103	87	82

	V	V1	Kg	V	V1	Kg	V	V1	Kg	C	Input	I	F	F1	F2	Type	Input	Kg
306 L1	307	60	23	—	—	—	357	60	28	45	B		195	147	1/4 G	6	B	28
306 L2	239	48	15	—	—	—	276	48	17	37	A		145	95	1/4 G	5	A	16
306 L3	137.5	24	6	158	38	7	—	—	—	37	A		105	65	1/4 G	4	A	10
306 L4	137.5	24	6	158	38	7	—	—	—	37	A	532	105	65	1/4 G	4	A	10

306 L

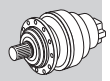

Metric

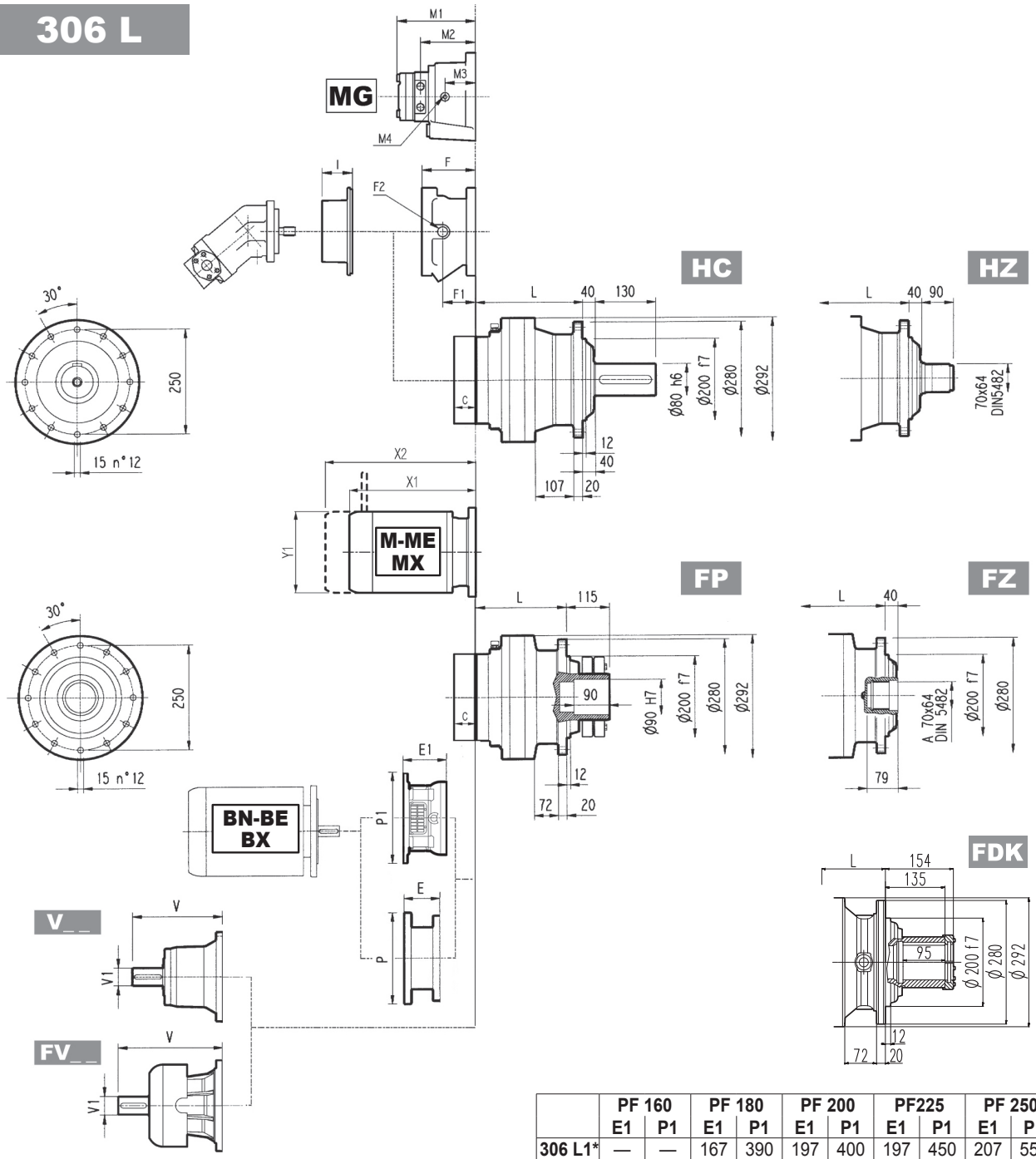

	PF 160		PF 180		PF 200		PF225		PF 250	
	E1	P1	E1	P1	E1	P1	E1	P1	E1	P1
306 L1*	—	—	167	390	197	400	197	450	207	550
306 L2	165	400	165	400	195	400	195	450	—	—
306 L3	165	400	165	400	—	—	—	—	—	—

(*) : for PC-PZ versions contact Bonfiglioli technical service

NOTE: For R design contact Bonfiglioli Technical service

FP | **T_{2max} = 106,210 lb•in**

Dimensions are in mm

	P71		P80		P90		P100		P112		P132		P160		P180		P200		P225		P250	
	E	P	E	P	E	P	E	P	E	P	E	P	E	P	E	P	E	P	E	P	E	P
306 L1	—	—	—	—	—	—	—	—	—	—	—	—	144	350	153	350	183	400	212	450	193	550
306 L2	—	—	—	—	—	—	—	—	—	—	114	300	144	350	144	350	174	400	—	—	—	—
306 L3	65	160	84	200	84	200	94	250	94	250	114	300	144	350	—	—	—	—	—	—	—	—
306 L4	65	160	84	200	84	200	94	250	94	250	114	300	144	350	—	—	—	—	—	—	—	—

	S1 + M1			S2 + ME2S			S3 + ME3S			S3 + ME3L			S4 + ME4/MX4			S5 + ME5S/MX5S			S5 + ME5L/MX5L		
	X1	X2	Y1	X1	X2	Y1	X1	X2	Y1	X1	X2	Y1	X1	X2	Y1	X1	X2	Y1	X1	X2	Y1
306 L1	—	—	—	—	—	—	—	—	—	—	—	—	—	—	—	—	—	—	—	—	—
306 L2	—	—	—	—	—	—	—	—	—	—	—	—	460	—	258	552	—	310	596	—	310
306 L3	253	314	138	280	—	156	325	—	195	357	—	195	460	—	258	—	—	—	—	—	—
306 L4	253	314	138	280	—	156	325	—	195	357	—	195	460	—	258	—	—	—	—	—	—

306 R

	Hydraulic motor							542			Kg
	MG										
cm3	050	080	100	125	160	200	250				
	M1							M2	M3	M4	
306 R2	—	167	171	175	181	188	197	113	60	1/4G	14
306 R3	162	167	171	175	181	—	—	113	60	1/4G	14

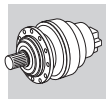

Metric

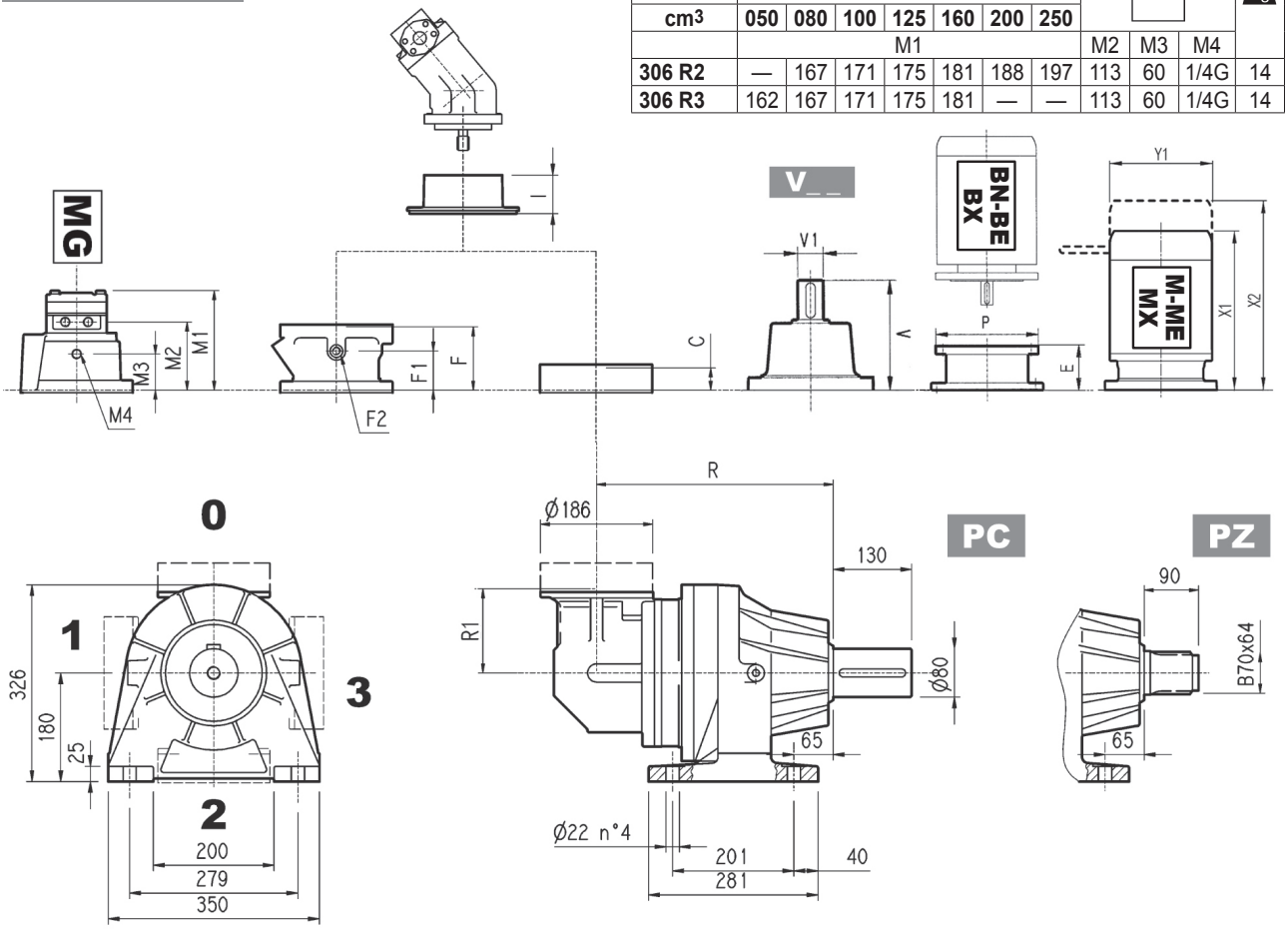

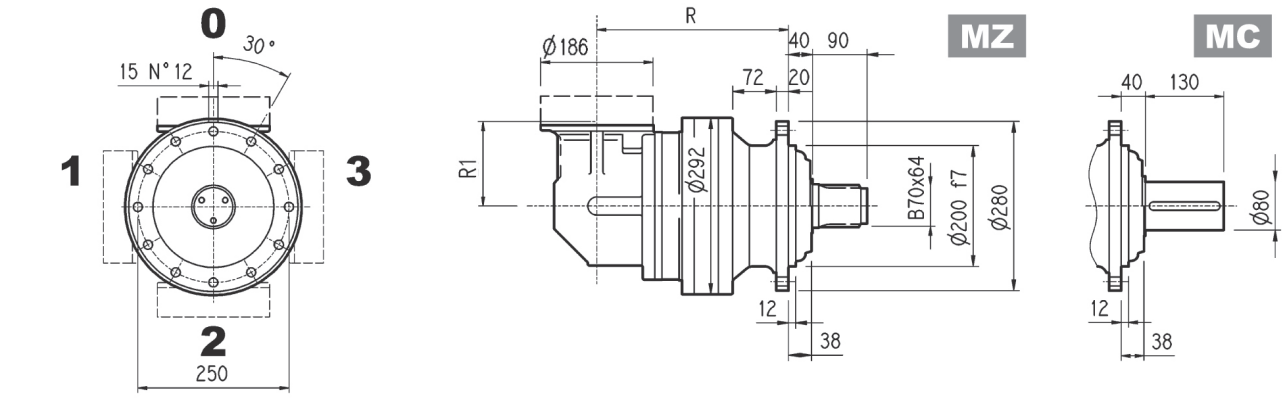

Dimensions are in mm

	R				R1	Kg			
	MC - MZ	PC - PZ	HC - HZ	FP - FZ - FDK		MC - MZ	PC - PZ	HC - HZ	FP - FZ - FDK
306 R2	297	372	332	297	140	89	105	94	89
306 R3	317	392	352	317	140	85	100	90	85
306 R4	370	445	405	370	122	79	95	84	79

	V	V1	Kg	V	V1	Kg	C	Input	I	F	F1	F2	Type	Input	Kg
306 R2	137.5	24	6	158	38	7	37	A		105	65	1/4 G	4	A	10
306 R3	137.5	24	6	158	38	7	37	A		105	65	1/4 G	4	A	10
306 R4	137.5	24	6	158	38	7	37	A	532	105	65	1/4 G	4	A	10

306 R

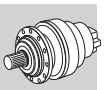

Metric

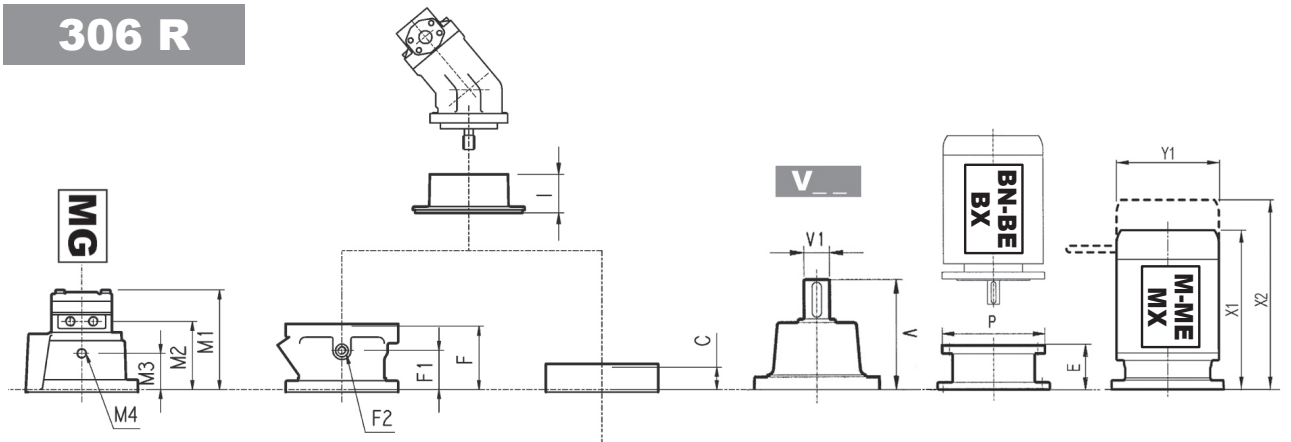

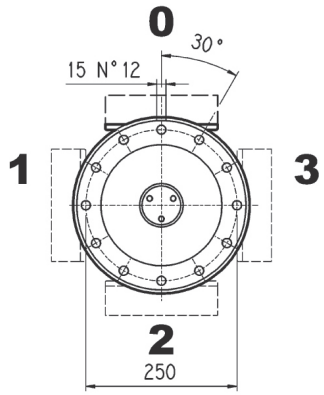

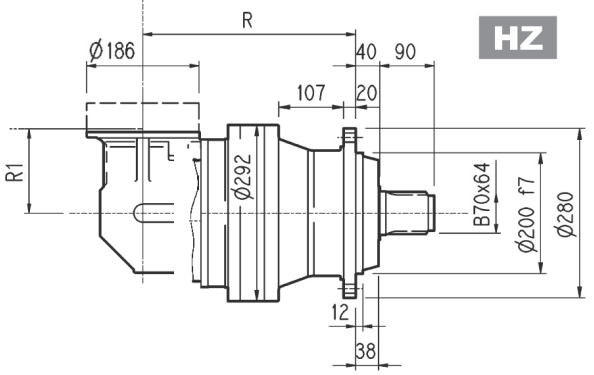

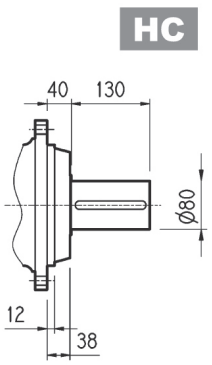

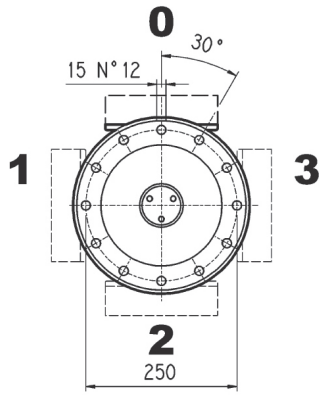

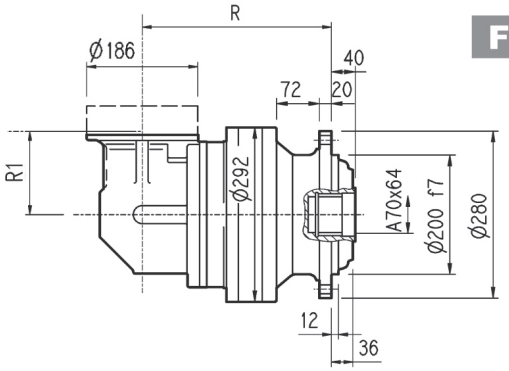

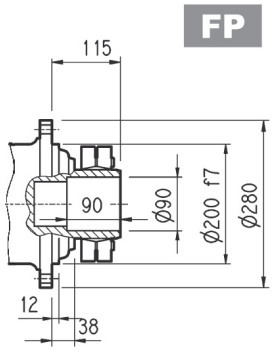

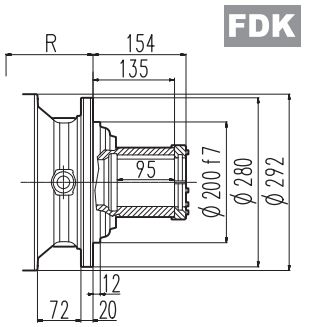

FP	T_{2max} = 106,210 lb•in

Dimensions are in mm

	P71		P80		P90		P100		P112		P132		P160	
	E	P	E	P	E	P	E	P	E	P	E	P	E	P
306 R2	65	160	84	200	84	200	94	250	94	250	114	300	144	350
306 R3	65	160	84	200	84	200	94	250	94	250	114	300	144	350
306 R4	65	160	84	200	84	200	94	250	94	250	114	300	144	350

	S1 + M1			S2 + ME2S			S3 + ME3S			S3 + ME3L			S4 + ME4/MX4		
	X1	X2	Y1	X1	X2	Y1	X1	X2	Y1	X1	X2	Y1	X1	X2	Y1
306 R2	—	—	—	328	—	156	373	—	195	405	—	195	508	—	258
306 R3	253	314	138	328	—	156	373	—	195	405	—	195	508	—	258
306 R4	253	314	138	328	—	156	373	—	195	405	—	195	508	—	258

Bonfiglioli Riduttori

306 L

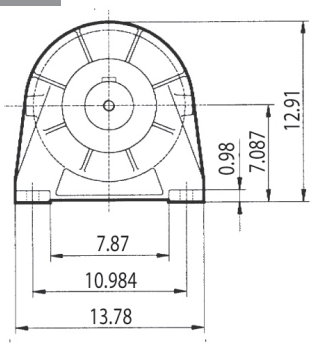

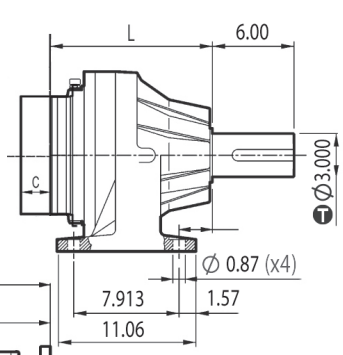

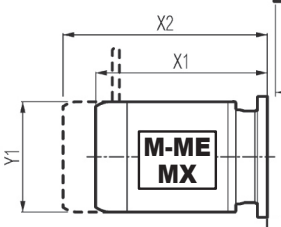

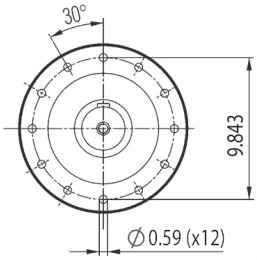

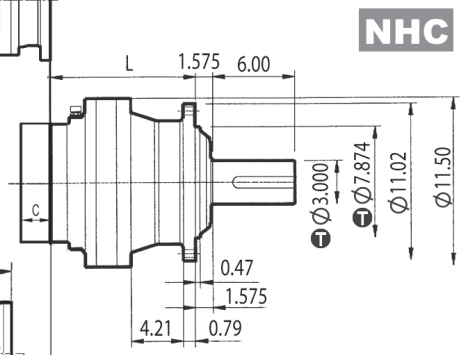

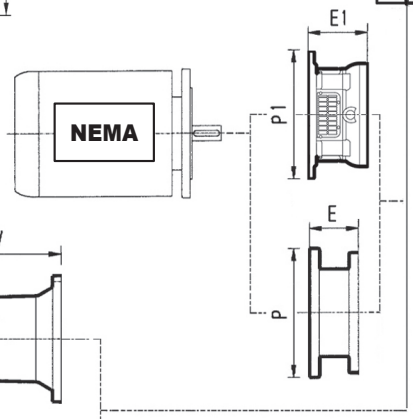

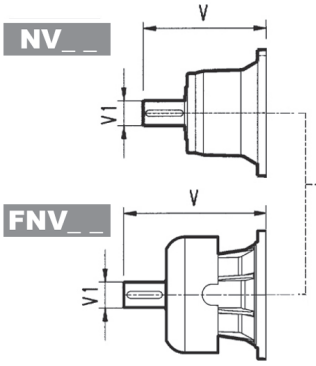

inch	Ⓣ
7.874	-0.00197 -0.00378
3.000	0 -0.00075

	PF N250TC		PF N280TC		PF N320TC		PF N360TC	
	E1	P1	E1	P1	E1	P1	E1	P1
306 L1*	—	—	8.740	15.354	9.921	15.748	10.315	17.717
306 L2	8.661	15.748	8.661	15.748	9.843	15.748	10.236	17.717
306 L3	8.661	15.748	8.661	15.748	—	—	—	—

(*) : for NPC version contact Bonfiglioli technical service
NOTE: for R design contact Bonfiglioli Technical Service
for PF N400TC contact Bonfiglioli Technical Service

Dimensions are in Inch except when shown in *italic [mm]*

	L		lbs	
	NPC	NHC	NPC	NHC
306 L1	9.25	7.68	187.4	154.4
306 L2	11.81	10.24	209.5	174.2
306 L3	13.90	12.32	216.1	183.0
306 L4	15.98	14.41	227.1	191.8

	V	V1	lbs	V	V1	lbs	V	V1	lbs	C	Input
306 L1	12.703	2.375	50.7	—	—	—	14.652	2.375	58.0	1.772	B
306 L2	9.681	1.875	33.1	—	—	—	11.138	1.875	38.0	1.457	A
306 L3	5.996	1.125	13.2	6.437	1.625	15.4	—	—	—	1.457	A
306 L4	5.996	1.125	13.2	6.437	1.625	15.4	—	—	—	1.457	A

	N56C		N140TC		N180TC		N210TC		N250TC		N280TC		N320TC		N360TC	
	E	P	E	P	E	P	E	P	E	P	E	P	E	P	E	P
306 L1	—	—	—	—	—	—	—	—	—	—	—	—	7.78	13.78	7.78	13.78
306 L2	—	—	—	—	—	—	—	—	5.22	11.81	6.22	13.78	—	—	—	—
306 L3	4.67	6.69	4.67	6.69	5.22	8.82	5.22	8.82	5.22	8.82	6.12	11.81	—	—	—	—
306 L4	4.67	6.69	4.67	6.69	5.22	8.82	5.22	8.82	5.22	8.82	6.12	11.81	—	—	—	—

	S1 + M1			S2 + ME2S			S3 + ME3S			S3 + ME3L			S4 + ME4/MX4			S5 + ME5S/MX5S			S5 + ME5L/MX5L		
	X1	X2	Y1	X1	X2	Y1	X1	X2	Y1	X1	X2	Y1	X1	X2	Y1	X1	X2	Y1	X1	X2	Y1
306 L1	—	—	—	—	—	—	—	—	—	—	—	—	—	—	—	—	—	—	—	—	—
306 L2	—	—	—	—	—	—	—	—	—	—	—	—	18.11	—	10.16	21.73	—	12.20	23.46	—	12.20
306 L3	9.96	12.36	5.43	11.02	—	6.14	12.80	—	7.68	14.06	—	7.68	18.11	—	10.16	—	—	—	—	—	—
306 L4	9.96	12.36	5.43	11.02	—	6.14	12.80	—	7.68	14.06	—	7.68	18.11	—	10.16	—	—	—	—	—	—

306 R

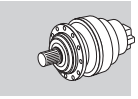

Imperial

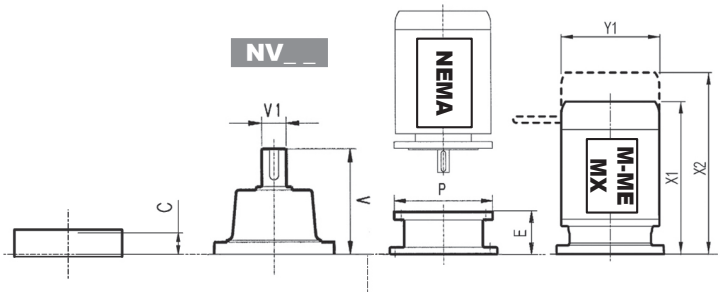

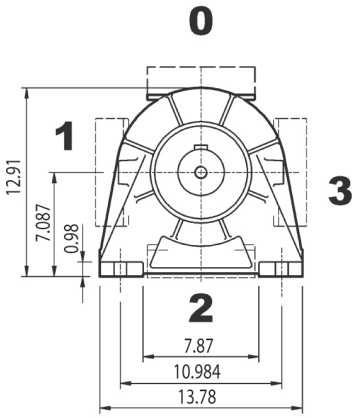

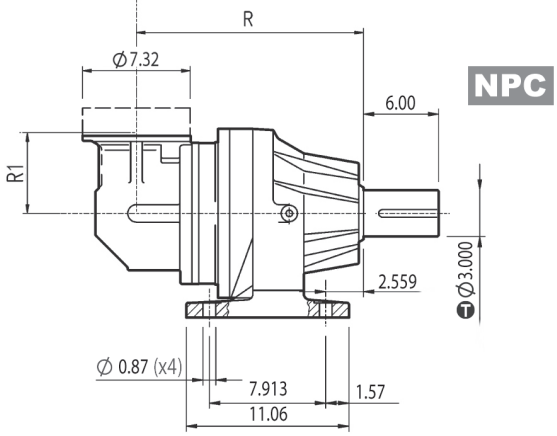

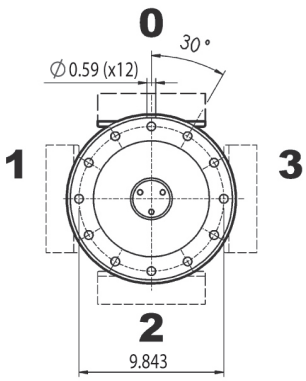

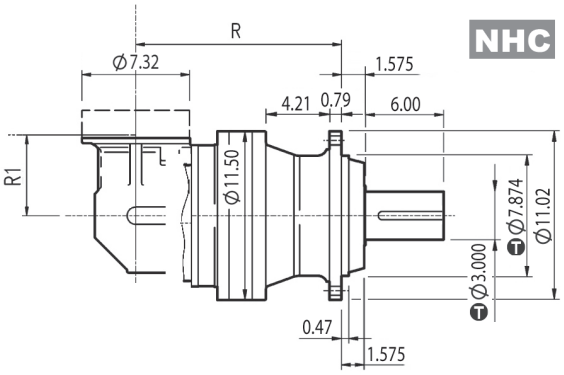

inch	T
7.874	-0.00197 -0.00378
3.000	0 -0.00075

Dimensions are in Inch except when shown in *italic [mm]*

	R		R1	lbs	
	NPC	NHC		NPC	NHC
306 R2	14.65	13.07	5.51	231.5	207.3
306 R3	15.43	13.86	5.51	220.5	198.5
306 R4	17.52	15.94	4.80	209.5	185.2

	V	V1	lbs	V	V1	lbs	C	Input
306 R2	5.996	1.125	13.2	6.437	1.625	15.4	1.457	A
306 R3	5.996	1.125	13.2	6.437	1.625	15.4	1.457	A
306 R4	5.996	1.125	13.2	6.437	1.625	15.4	1.457	A

	N56C		N140TC		N180TC		N210TC		N250TC		N280TC	
	E	P	E	P	E	P	E	P	E	P	E	P
306 R2	4.67	6.69	4.67	6.69	5.22	8.82	5.22	8.82	5.22	8.82	6.12	11.81
306 R3	4.67	6.69	4.67	6.69	5.22	8.82	5.22	8.82	5.22	8.82	6.12	11.81
306 R4	4.67	6.69	4.67	6.69	5.22	8.82	5.22	8.82	5.22	8.82	6.12	11.81

	S1 + M1			S2 + ME2S			S3 + ME3S			S3 + ME3L			S4 + ME4/MX4		
	X1	X2	Y1	X1	X2	Y1	X1	X2	Y1	X1	X2	Y1	X1	X2	Y1
306 R2	—	—	—	12.91	—	6.14	14.68	—	7.68	15.94	—	7.68	20	—	10.16
306 R3	9.96	12.36	5.43	12.91	—	6.14	14.68	—	7.68	15.94	—	7.68	20	—	10.16
306 R4	9.96	12.36	5.43	12.91	—	6.14	14.68	—	7.68	15.94	—	7.68	20	—	10.16

Bonfiglioli Riduttori

3/V 06 L3

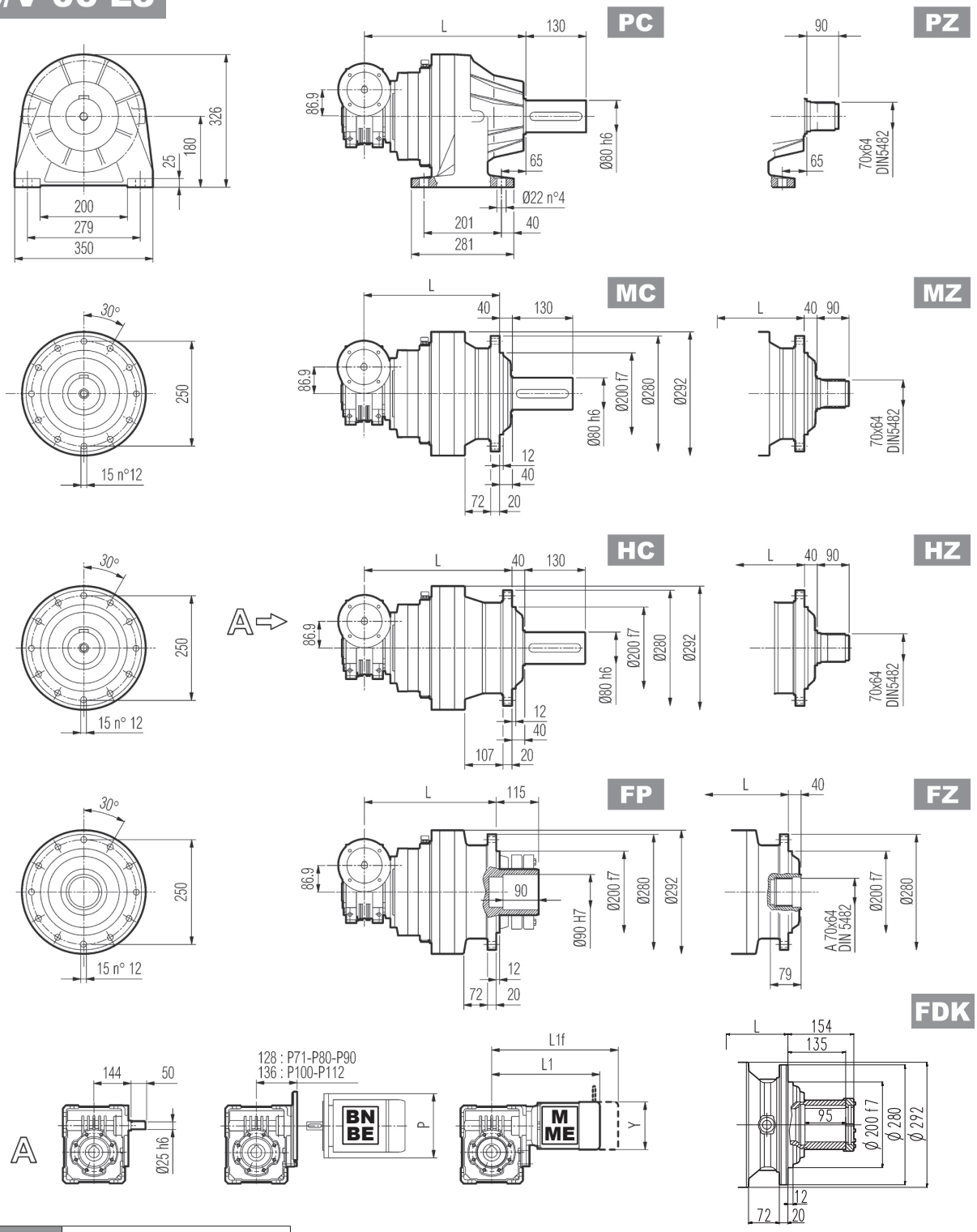

FP	T_{2max} = 106,210 lb•in

Dimensions are in mm

	L				Kg				P71	P80	P90	P100	P112
	MC - MZ	PC - PZ	HC - HZ	FP - FZ - FDK	MC - MZ	PC - PZ	HC - HZ	FP - FZ - FDK	P	P	P	P	P
3/V 06 L3	370	445	405	370	80	111	95	80	160	200	200	250	250

	S1 + M1			S2 + ME2S			S3 + ME3S			S3 + ME3L		
	L1	L1f	Y	L1	L1f	Y	L1	L1f	Y	L1	L1f	Y
3/V 06 L3	324	385	138	349	—	156	392	—	193	424	—	193

3/V 06 L3

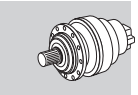

Imperial

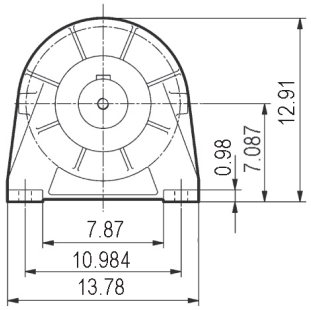

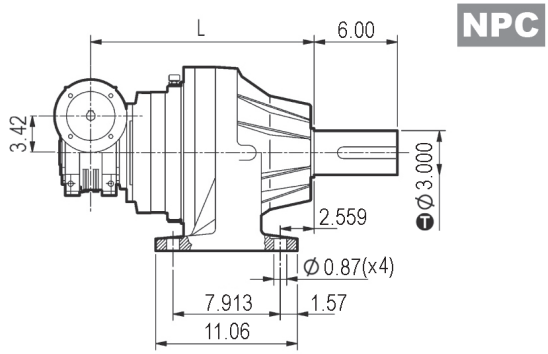

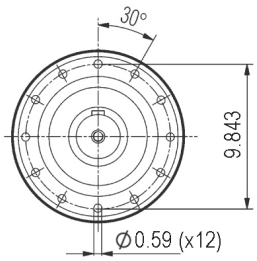

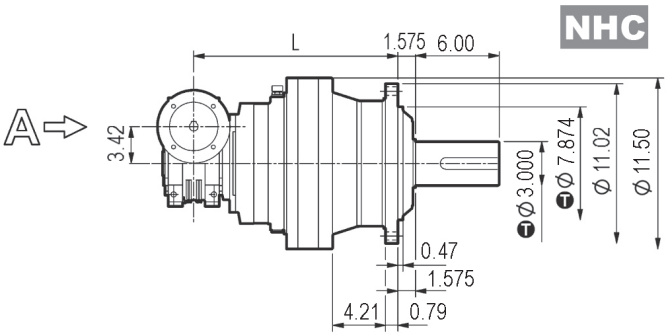

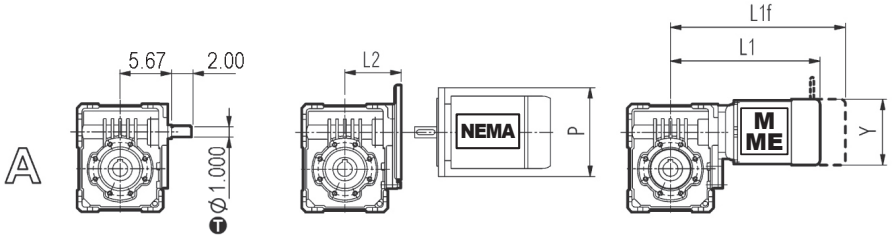

inch	T
7.874	-0.00197 / -0.00378
3.000	0 / -0.00075
1.000	0 / -0.00051

Dimensions are in Inch except when shown in *italic [mm]*

	L		lbs		N56 C		N140TC		N180TC		N210TC	
	NPC	NHC	NPC	NHC	P	L2	P	L2	P	L2	P	L2
3/V 06 L3	17.52	15.94	244.8	209.5	6.54	5.37	6.54	5.37	9.02	5.37	9.02	6.08

	S1 + M1			S2 + ME2S			S3 + ME3S			S3 + ME3L		
	L1	L1f	Y	L1	L1f	Y	L1	L1f	Y	L1	L1f	Y
3/V 06 L3	12.76	15.16	5.43	13.74	—	6.14	15.43	—	7.60	16.69	—	7.60

Bonfiglioli Riduttori

3/A 06 L2

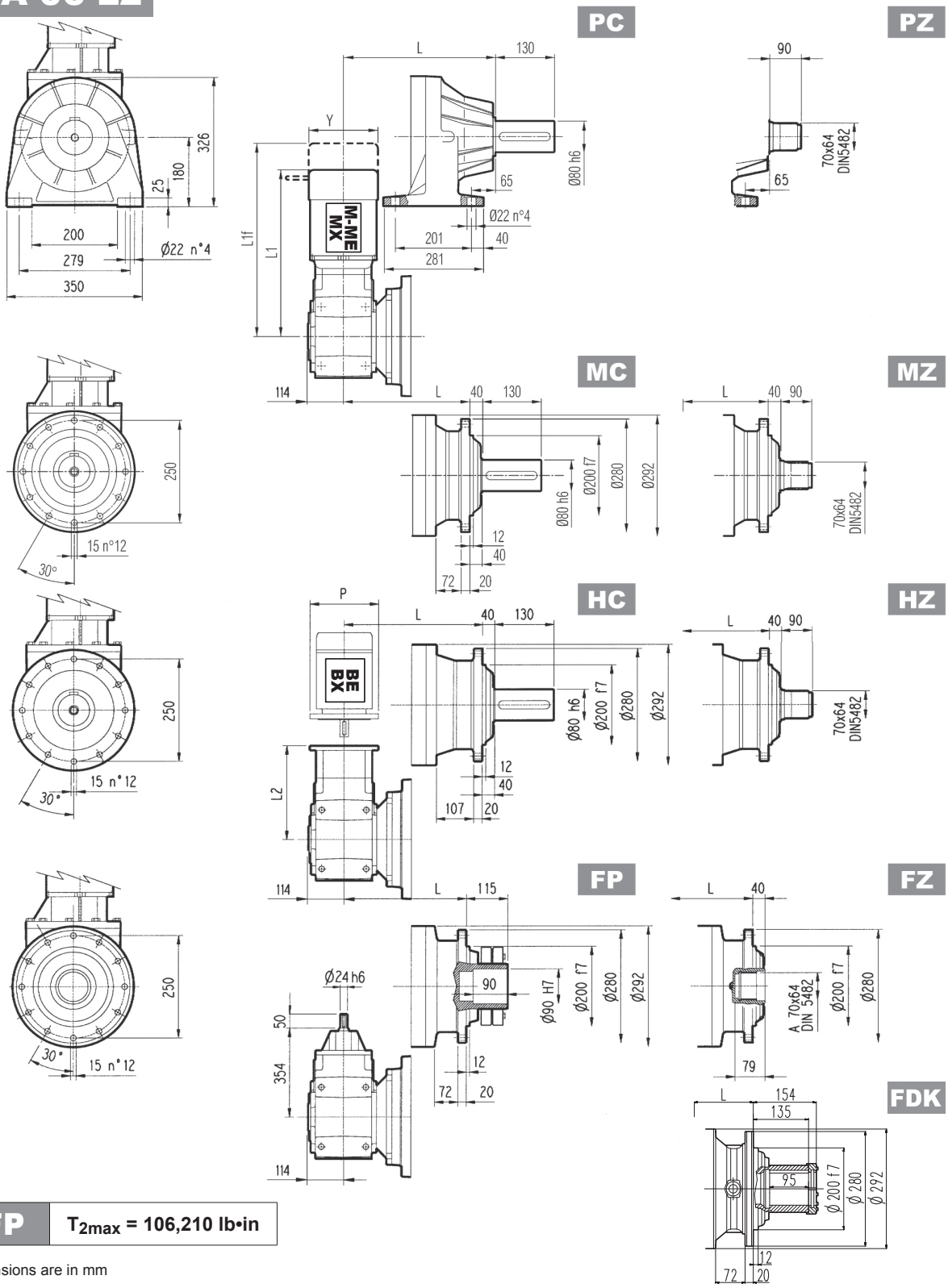

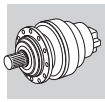

Metric

FP | T_{2max} = 106,210 lb•in

Dimensions are in mm

	L				Kg			
	MC - MZ	PC - PZ	HC - HZ	FP - FZ - FDK	MC - MZ	PC - PZ	HC - HZ	FP - FZ - FDK
3/A 06 L2	340	415	375	340	140	170	150	140

	P63		P71		P80		P90		P100		P112		P132		P160		P180	
	L2	P	L2	P	L2	P	L2	P	L2	P	L2	P	L2	P	L2	P	L2	P
3/A 06 L2	314.5	140	314.5	160	334	200	334	200	344	250	344	250	380.5	300	431	350	431	350

	S1 + M1			S2 + ME2S			S3 + ME3S			S3 + ME3L			S4 + ME4/MX4		
	L1	L1f	Y	L1	L1f	Y	L1	L1f	Y	L1	L1f	Y	L1	L1f	Y
3/A 06 L2	445	508	138	568	—	156	541	—	195	572	—	195	678	—	258

3/A 06 L2

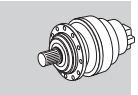

Imperial

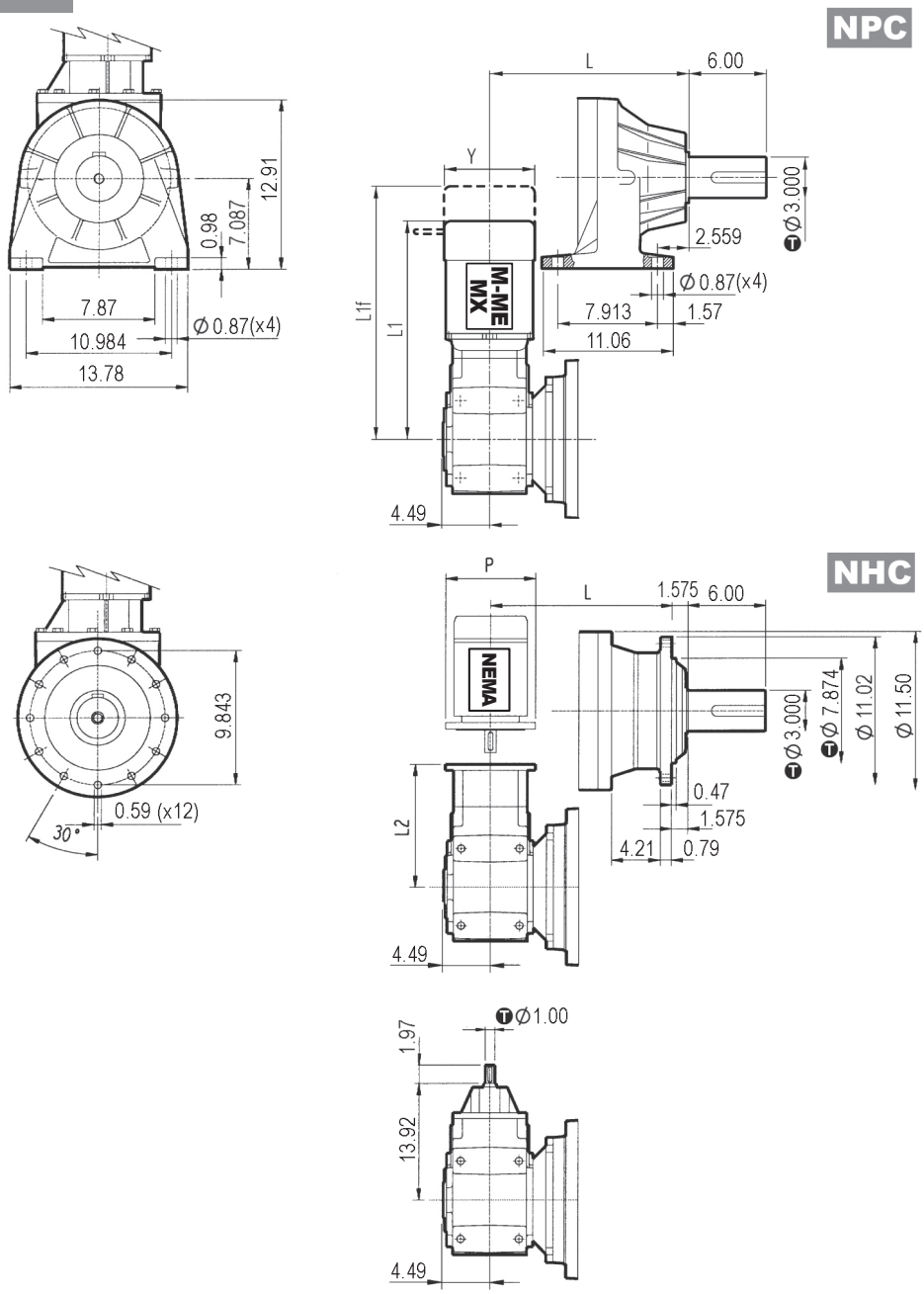

inch	T
7.874	-0.00197 / -0.00378
3.000	0 / -0.00075
1.000	0 / -0.00051

Dimensions are in Inch except when shown in *italic [mm]*

	L		lbs		N56C		N140TC		N180TC		N210TC		N250TC		N280TC	
	NPC	NHC	NPC	NHC	L2	P	L2	P	L2	P	L2	P	L2	P	L2	P
3/A 06 L2	16.34	14.76	374.9	330.8	13.17	6.50	13.17	6.50	13.92	9.00	15.16	9.00	17.95	13.78	18.15	13.78

	S1 + M1			S2 + ME2S			S3 + ME3S			S3 + ME3L			S4 + ME4/MX4		
	L1	L1f	Y	L1	L1f	Y	L1	L1f	Y	L1	L1f	Y	L1	L1f	Y
3/A 06 L2	17.52	20	5.43	22.36	—	6.14	21.30	—	7.68	22.52	—	7.68	26.69	—	10.16

Bonfiglioli Riduttori

306 L | 306 R | 3/V 06 L3 | 3/A 06 L2

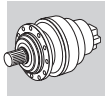

Metric

Imperial

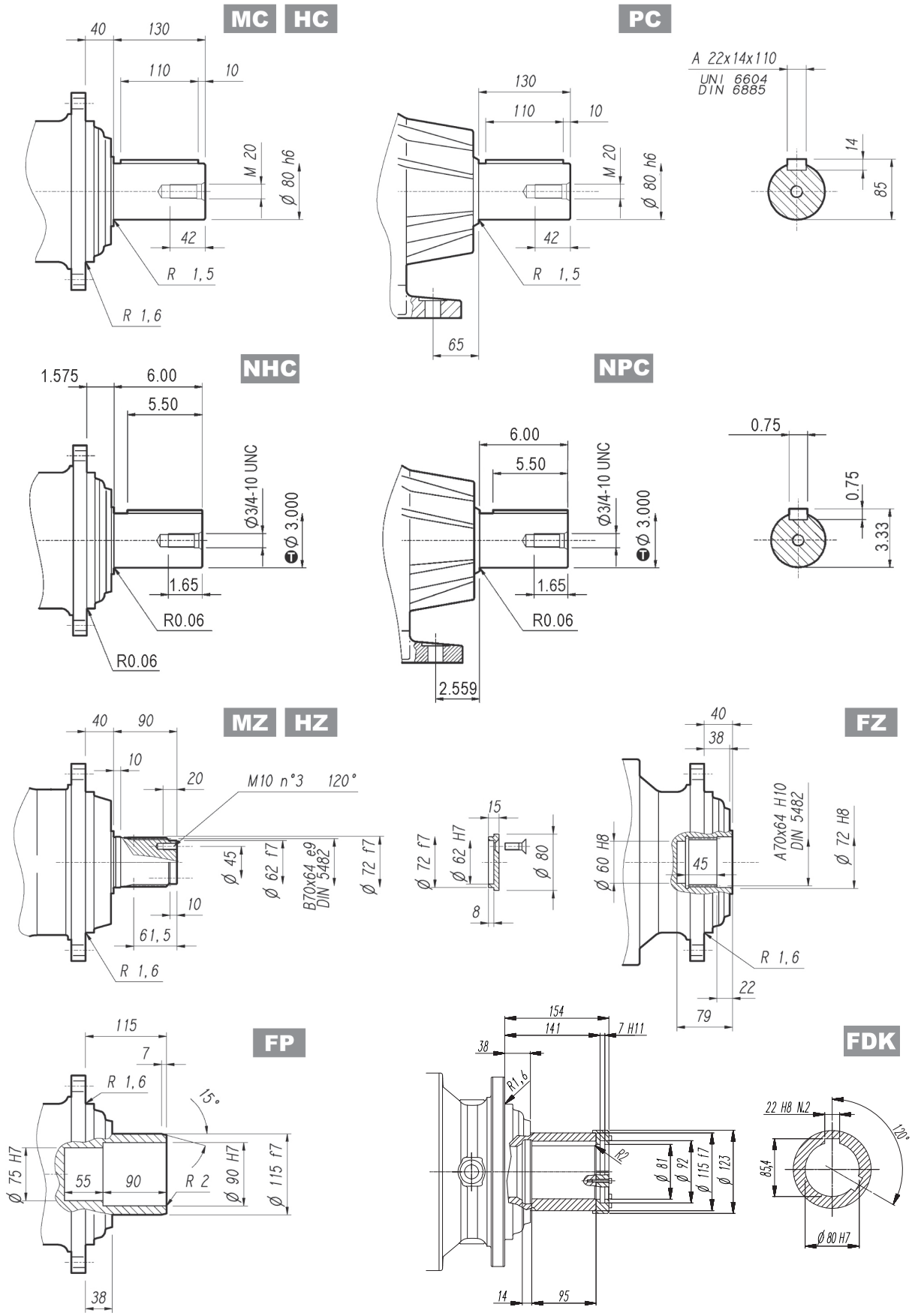

FP	T_{2max} = 106,210 lb•in

Dimensions are in mm when shown in italic, otherwise dimensions are in inches

inch	Ⓣ
3.000	0 / -0.00075

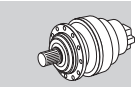

Flange

W0A

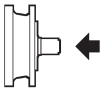

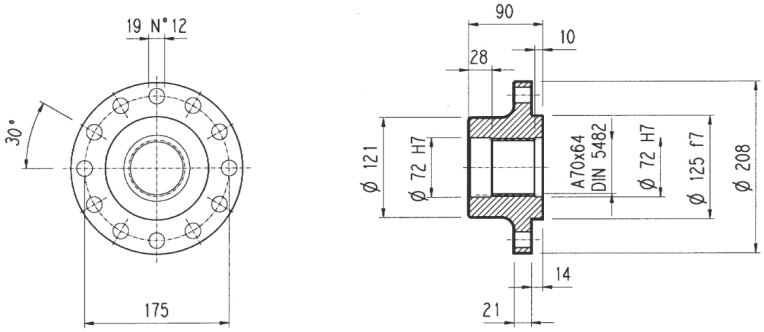

Material: Steel C40

Dimensions are in mm

Pinions

P...

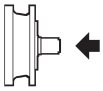

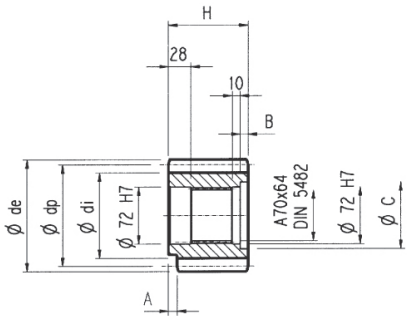

Dimensions are in mm

α = 20°

	m	z	x	dp	di	de	H	A	B	C	Material
PFF1	8	15	—	120	100	134	90	—	—	—	Steel 39NiCrMo3 hardened and tempered
PFF2	8	15	0.500	120	108	141	90	—	—	—	
PHB	10	11	0.500	110	95	136	90	10	—	—	
PHC1	10	12	0.450	120	104	145	90	—	—	—	
PHC2	10	12	0.320	120	100	144.2	90	—	—	—	
PHC3	10	12	0.350	120	101	144	90	—	—	—	
PHD1	10	13	0.950	130	124	165	90	—	—	—	
PHD2	10	13	0.500	130	115	159	90	—	—	—	
PHE1	10	14	—	140	115	160	90	—	—	—	
PHE2	10	14	0.500	140	125	166	90	—	—	—	Steel 18NiCrMo5 case hardened
PHF	10	15	—	150	127	167	90	24	—	—	Steel 39NiCrMo3 hardened and tempered
PHH	10	17	0.480	170	154	197.5	90	10	—	—	
PHM	10	20	—	200	175	220	90	10	—	—	Steel 18NiCrMo5 case hardened

Sleeve coupling

M0A

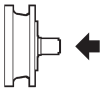

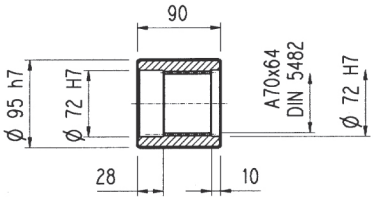

Material: Steel 16CrNi4

Dimensions are in mm

Splined bars

B0A

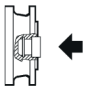

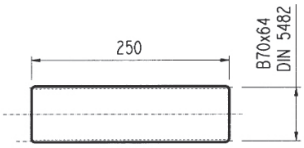

Material: Case hardening steel 18NiCrMo5 UNI 5331
must be case hardened 50-55 HRC

Shrink disc

G0A

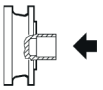

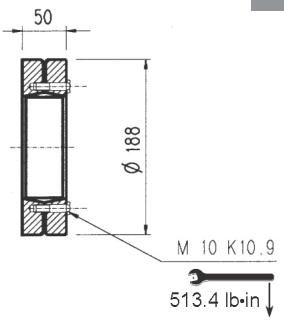

Dimensions are in mm

306 L 306 R

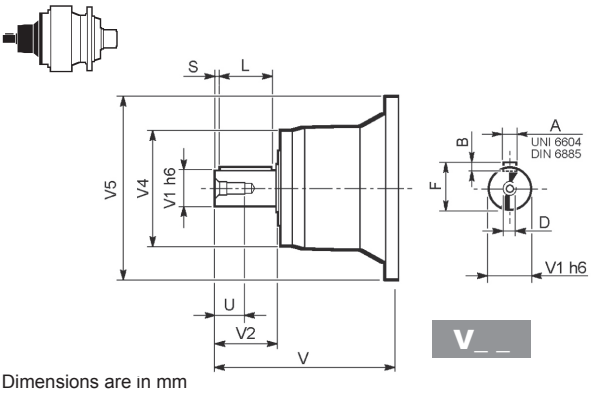

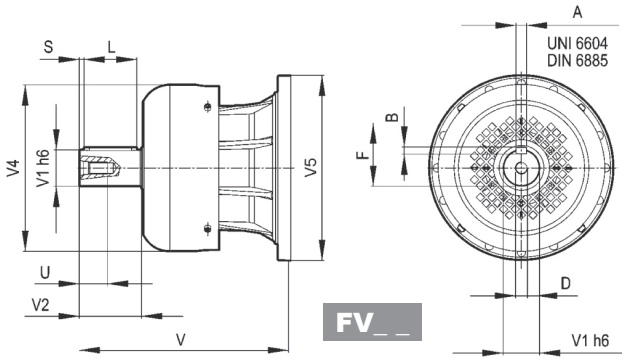

Dimensions are in mm

		V	V1	V2	V4	V5	A	B	F	L	S	D	U
306 L1	**V06B**	307	60	105	155	292	18	11	64	90	7.5	M16	36
	FV06B	357	60	105	309	292	18	11	64	90	7.5	M16	36
306 L2	**V05B**	239	48	82	155	245	14	9	51.5	70	6	M16	36
	FV05B	276	48	82	219.5	244	14	9	51.5	70	6	M16	36
306 L3	**V01A**	137.5	24	36	120	186	8	7	27	30	3	M8	19
	V01B	158	38	58	120	186	10	8	41	50	4	M12	28
306 L4	**V01A**	137.5	24	36	120	186	8	7	27	30	3	M8	19
	V01B	158	38	58	120	186	10	8	41	50	4	M12	28
306 R2-R3-R4	**V01A**	137.5	24	36	120	186	8	7	27	30	3	M8	19
	V01B	158	38	58	120	186	10	8	41	50	4	M12	28

306 L 306 R

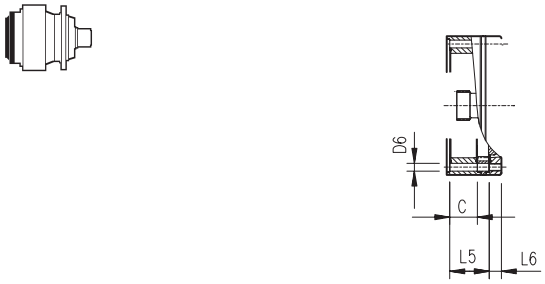

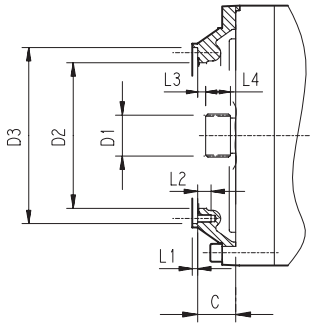

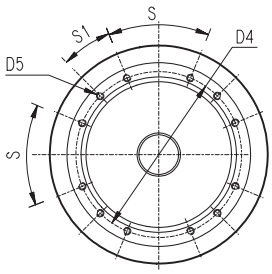

Dimensions are in mm

		C	D1	D2	D3	D4	D5	D6	L1	L2	L3	L4	L5	L6	S	S1	Input
306 L1	**V9AB**	45	58x53 DIN5482	195	236 H7	222	M10 n°12	—	4	18	11	22	—	—	45°	22.5°	B
306 L2	**V9AA**	37	40x36 DIN5482	140	178 H7	165	M10 n°8	—	4	18	9	18	—	—	45°	45°	A
306 L3	**V9AA**	37	40x36 DIN5482	140	178 H7	165	M10 n°8	11	4	—	9	18	53	18	45°	45°	A
306 L4	**V9AA**	37	40x36 DIN5482	140	178 H7	165	M10 n°8	11	4	—	9	18	106	18	45°	45°	A
306 R2-R3-R4	**V9AA**	37	40x36 DIN5482	140	178 H7	165	M10 n°8	11	4	—	9	18	37	18	45°	45°	A

3/V 06 L3

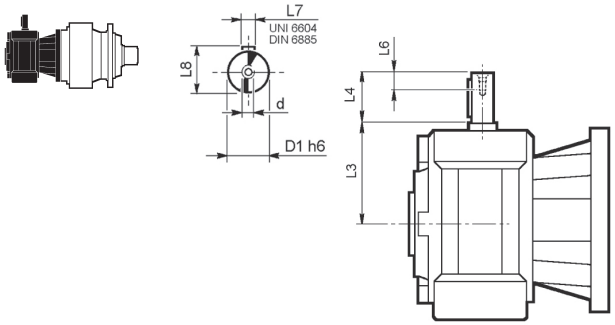

Dimensions are in mm

	D1 h6	L3	L4	L6	L7	L8	d
3/V 06 L3_HS	25	144	50	19	8	28	M8

3/A 06 L2

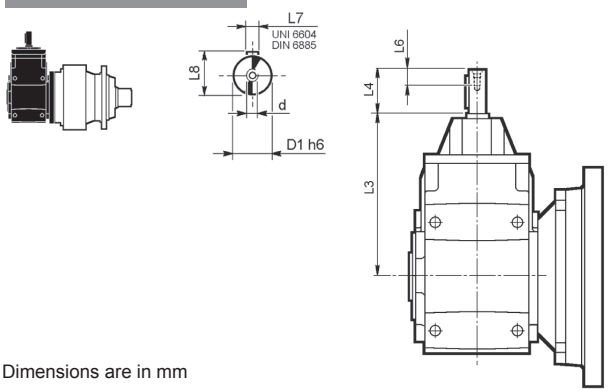

Dimensions are in mm

	D1 h6	L3	L4	L6	L7	L8	d
3/A 06 L2_HS	24	354	50	19	8	27	M8

306 L 306 R

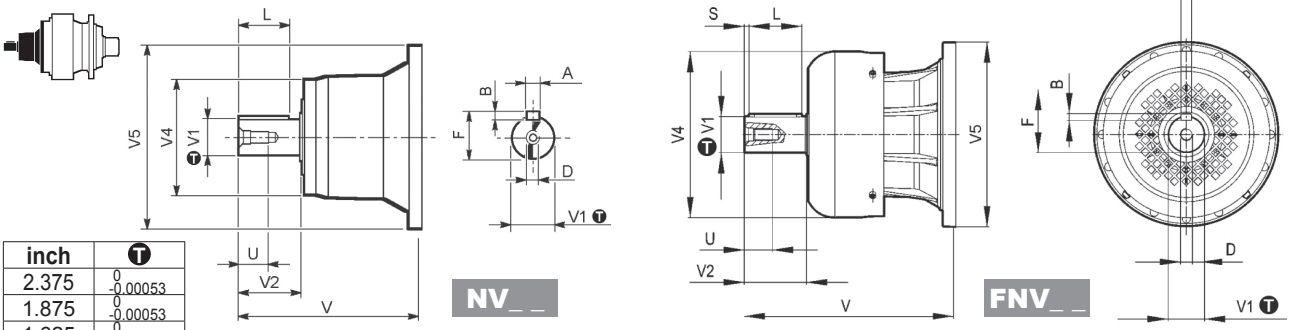

inch	T
2.375	0 / -0.00053
1.875	0 / -0.00053
1.625	0 / -0.00053
1.125	0 / -0.00051

Dimensions are in Inch except when shown in *italic [mm]*

		V	V1	V2	V4	V5	A	B	F	L	D	U
306 L1	**NV06B**	12.703	2.375	4.750	6.417	11.496	0.625	0.625	2.646	4.252	3/4 -10 UNC	1.654
	FNV06B	14.652	2.375	4.750	12.165	11.496	0.625	0.625	2.646	4.252	3/4 -10 UNC	1.654
306 L2	**NV05B**	9.681	1.875	3.500	6.417	9.606	0.500	0.500	2.091	3.000	5/8-11 UNC	1.417
	FNV05B	11.138	1.875	3.500	8.641	9.606	0.500	0.500	2.091	3.000	5/8-11 UNC	1.417
306 L3	**NV01A**	5.996	1.125	2.000	4.980	7.323	0.250	0.250	1.236	1.752	3/8-16 UNC	0.866
	NV01B	6.437	1.625	2.500	4.980	7.323	0.375	0.375	1.791	2.000	1/2-13 UNC	1.102
306 L4	**NV01A**	5.996	1.125	2.000	4.980	7.323	0.250	0.250	1.236	1.752	3/8-16 UNC	0.866
	NV01B	6.437	1.625	2.500	4.980	7.323	0.375	0.375	1.791	2.000	1/2-13 UNC	1.102
306 R2-R3-R4	**NV01A**	5.996	1.125	2.000	4.980	7.323	0.250	0.250	1.236	1.752	3/8-16 UNC	0.866
	NV01B	6.437	1.625	2.500	4.980	7.323	0.375	0.375	1.791	2.000	1/2-13 UNC	1.102

306 L 306 R

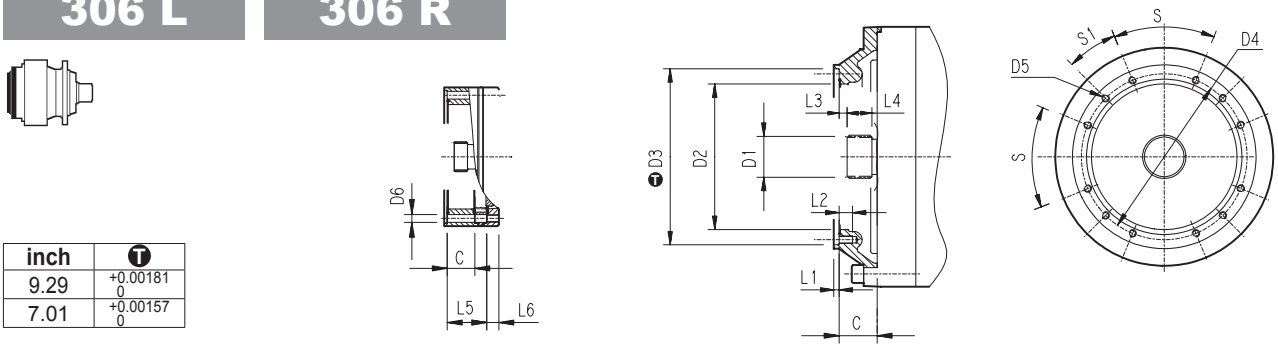

inch	T
9.29	+0.00181 / 0
7.01	+0.00157 / 0

Dimensions are in Inch except when shown in *italic [mm]*

		C	D1	D2	D3	D4	D5	D6	L1	L2	L3	L4	L5	L6	S	S1	Input
306 L1	**V9AB**	1.77	*58x53 DIN5482*	7.68	9.29	8.74	*M10 n°12*	—	0.16	0.71	0.43	0.87	—	—	45°	22.5°	B
306 L2	**V9AA**	1.46	*40x36 DIN5482*	5.51	7.01	6.50	*M10 n°8*	—	0.16	0.71	0.35	0.71	—	—	45°	45°	A
306 L3	**V9AA**	1.46	*40x36 DIN5482*	5.51	7.01	6.50	*M10 n°8*	0.43	0.16	—	0.35	0.71	4.65	0.71	45°	45°	A
306 L4	**V9AA**	1.46	*40x36 DIN5482*	5.51	7.01	6.50	*M10 n°8*	0.43	0.16	—	0.35	0.71	6.73	0.71	45°	45°	A
306 R2-R3-R4	**V9AA**	1.46	*40x36 DIN5482*	5.51	7.01	6.50	*M10 n°8*	0.43	0.16	—	0.35	0.71	1.46	0.71	45°	45°	A

3/V 06 L3

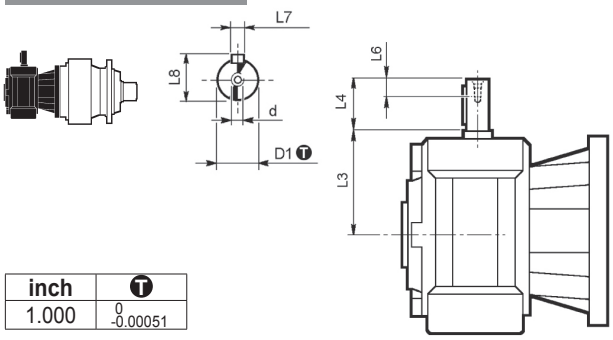

inch	T
1.000	0 / -0.00051

Dimensions are in Inch except when shown in *italic [mm]*

	D1	L3	L4	L6	L7	L8	d
3/V 06 L3_NHS	1.000	5.67	1.969	0.75	0.250	1.109	3/8-16UNC

3/A 06 L2

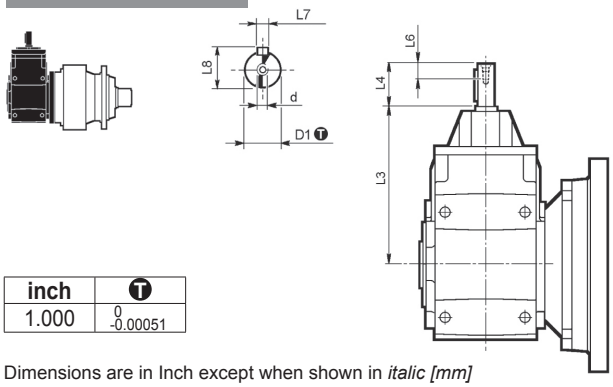

inch	T
1.000	0 / -0.00051

Dimensions are in Inch except when shown in *italic [mm]*

	D1	L3	L4	L6	L7	L8	d
3/A 06 L2_NHS	1.000	13.92	1.969	0.75	0.250	1.109	3/8-16UNC

Permissible radial and axial loads on output shaft with $Fh_2 : n_2 \cdot h = 100000$

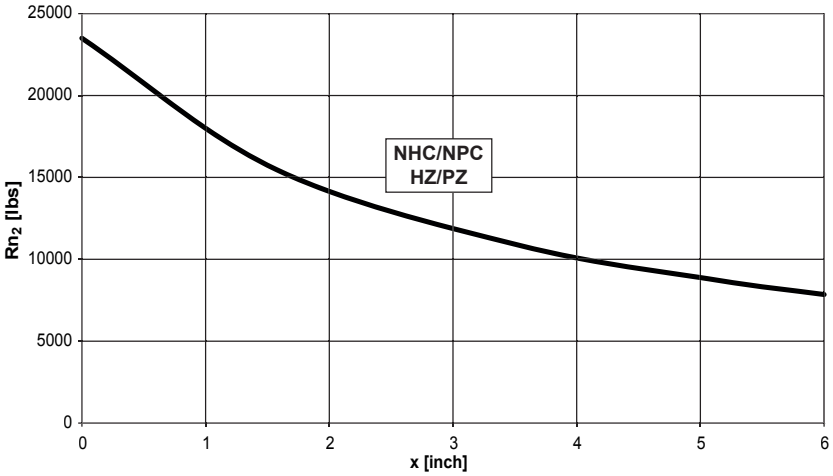

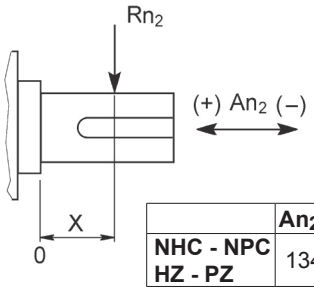

	An2 (+)	An2 (-)
NHC - NPC HZ - PZ	13488	6744

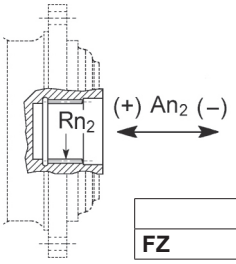

	Rn2	An2 (+/-)
FZ	3652	3652

Load corrective factor fh_2 on shafts	$Fh_2 = n_2 \cdot h$		10000	25000	50000	100000	500000	1000000
	fh_2	FZ	**2.15**	**1.59**	**1.26**	**1.00**	**0.58**	**0.46**
		NHC - NPC - HZ -PZ	**1.34**	**1.34**	**1.23**	**1.00**	**0.62**	**0.50**

Permissible radial loads on input shaft with $Fh_1 : n_1 \cdot h = 250000$

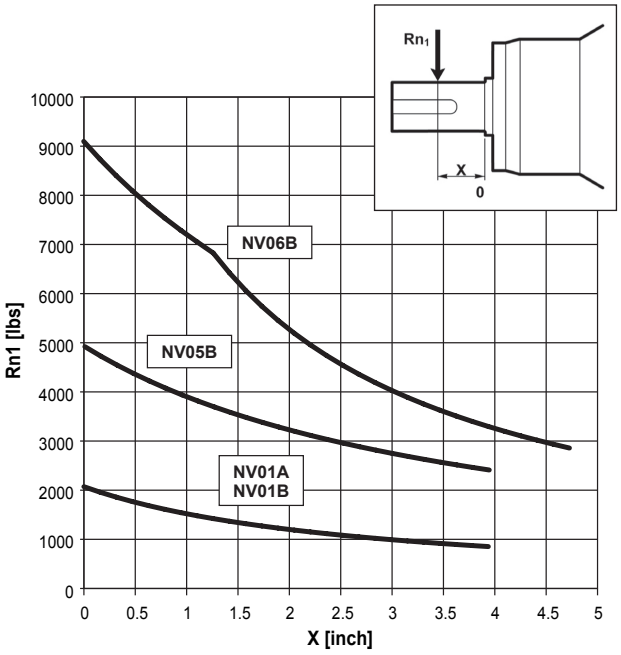

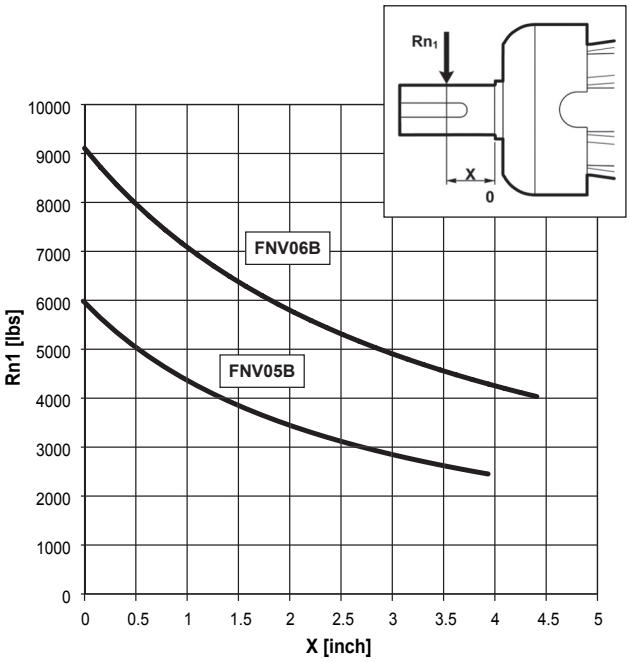

Load corrective factor fh_1 on shafts	$Fh_1 = n_1 \cdot h$	250000	500000	1000000	2000000	5000000	10000000
	fh_1	**1**	**0.79**	**0.63**	**0.50**	**0.37**	**0.29**

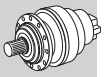

306 VK

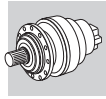

Metric

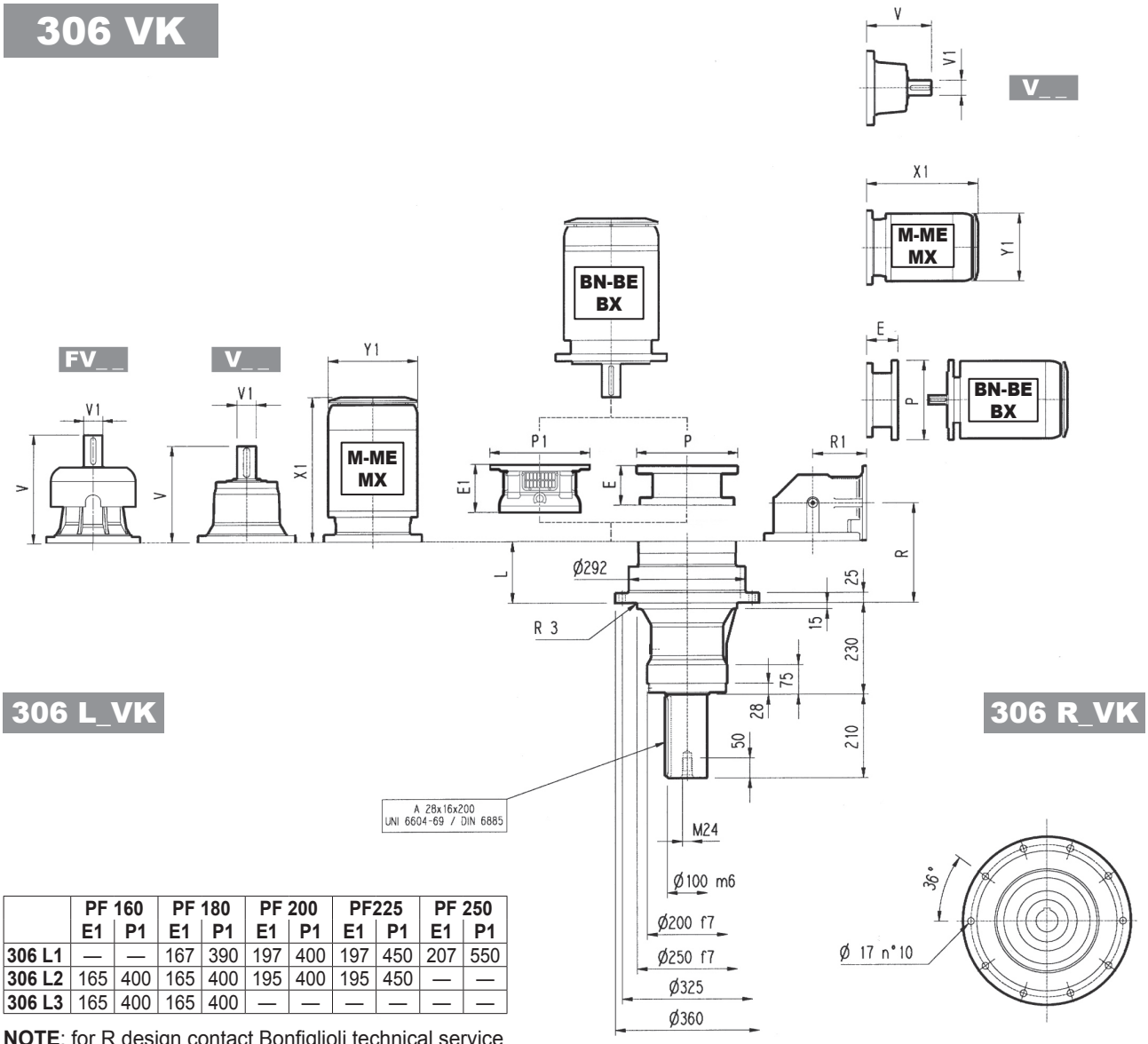

	PF 160		PF 180		PF 200		PF225		PF 250	
	E1	P1	E1	P1	E1	P1	E1	P1	E1	P1
306 L1	—	—	167	390	197	400	197	450	207	550
306 L2	165	400	165	400	195	400	195	450	—	—
306 L3	165	400	165	400	—	—	—	—	—	—

NOTE: for R design contact Bonfiglioli technical service

Dimensions are in mm

	L	Kg	V	V1	Kg	V	V1	Kg	V	V1	Kg	V	V1	Kg	P71		P80		P90		P100		P112		P132		P160		P180		P200		P225		P250	
															E	P	E	P	E	P	E	P	E	P	E	P	E	P	E	P	E	P	E	P	E	P
306 L1	75	110	307	60	23	—	—	—	357	60	28	—	—	—	—	—	—	—	—	—	—	—	—	—	—	—	144	350	153	350	183	400	212	450	193	550
306 L2	140	120	239	48	15	—	—	—	276	48	17	—	—	—	—	—	—	—	—	—	—	—	—	—	114	300	144	350	144	350	174	400	—	—	—	—
306 L3	193	125	137.5	24	6	158	38	7	—	—	—	—	—	—	65	160	84	200	84	200	94	250	94	250	114	300	144	350	—	—	—	—	—	—	—	—
306 L4	246	130	137.5	24	6	158	38	7	—	—	—	—	—	—	65	160	84	200	84	200	94	250	94	250	114	300	144	350	—	—	—	—	—	—	—	—

	S1 + M1			S2 + ME2S			S3 + ME3S			S3 + ME3L			S4 + ME4/MX4			S5 + ME5S/MX5S			S5 + ME5L/MX5L		
	X1	X2	Y1	X1	X2	Y1	X1	X2	Y1	X1	X2	Y1	X1	X2	Y1	X1	X2	Y1	X1	X2	Y1
306 L1	—	—	—	—	—	—	—	—	—	—	—	—	—	—	—	—	—	—	—	—	—
306 L2	—	—	—	—	—	—	—	—	—	—	—	—	460	—	258	552	—	310	596	—	310
306 L3	253	314	138	280	—	156	325	—	195	357	—	195	460	—	258	—	—	—	—	—	—
306 L4	253	314	138	280	—	156	325	—	195	357	—	195	460	—	258	—	—	—	—	—	—

	R	R1	Kg	V	V1	Kg	V	V1	Kg	P71		P80		P90		P100		P112		P132		P160	
										E	P	E	P	E	P	E	P	E	P	E	P	E	P
306 R2	212	140	90	137.5	24	6	158	38	7	65	160	84	200	84	200	94	250	94	250	114	300	144	350
306 R3	232	140	92	137.5	24	6	158	38	7	65	160	84	200	84	200	94	250	94	250	114	300	144	350
306 R4	285	122	95	137.5	24	6	158	38	7	65	160	84	200	84	200	94	250	94	250	114	300	144	350

	S1 + M1			S2 + ME2S			S3 + ME3S			S3 + ME3L			S4 + ME4/MX4		
	X1	X2	Y1	X1	X2	Y1	X1	X2	Y1	X1	X2	Y1	X1	X2	Y1
306 R2	—	—	—	328	—	156	373	—	195	405	—	195	508	—	258
306 R3	253	314	138	328	—	156	373	—	195	405	—	195	508	—	258
306 R4	253	314	138	328	—	156	373	—	195	405	—	195	508	—	258

306 VK

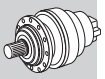

Metric

The diagram below allows the calculation of permitted overhung load R_{x2} on the output shaft of gearbox, with radial force applying at a distance x from shaft shoulder.
The curves are relevant to value resulting from the relationship of trust load A_{n2} to radial load R_{n2}, based on n_2 = 10 rpm and 10000 hrs theoretical lifetime.

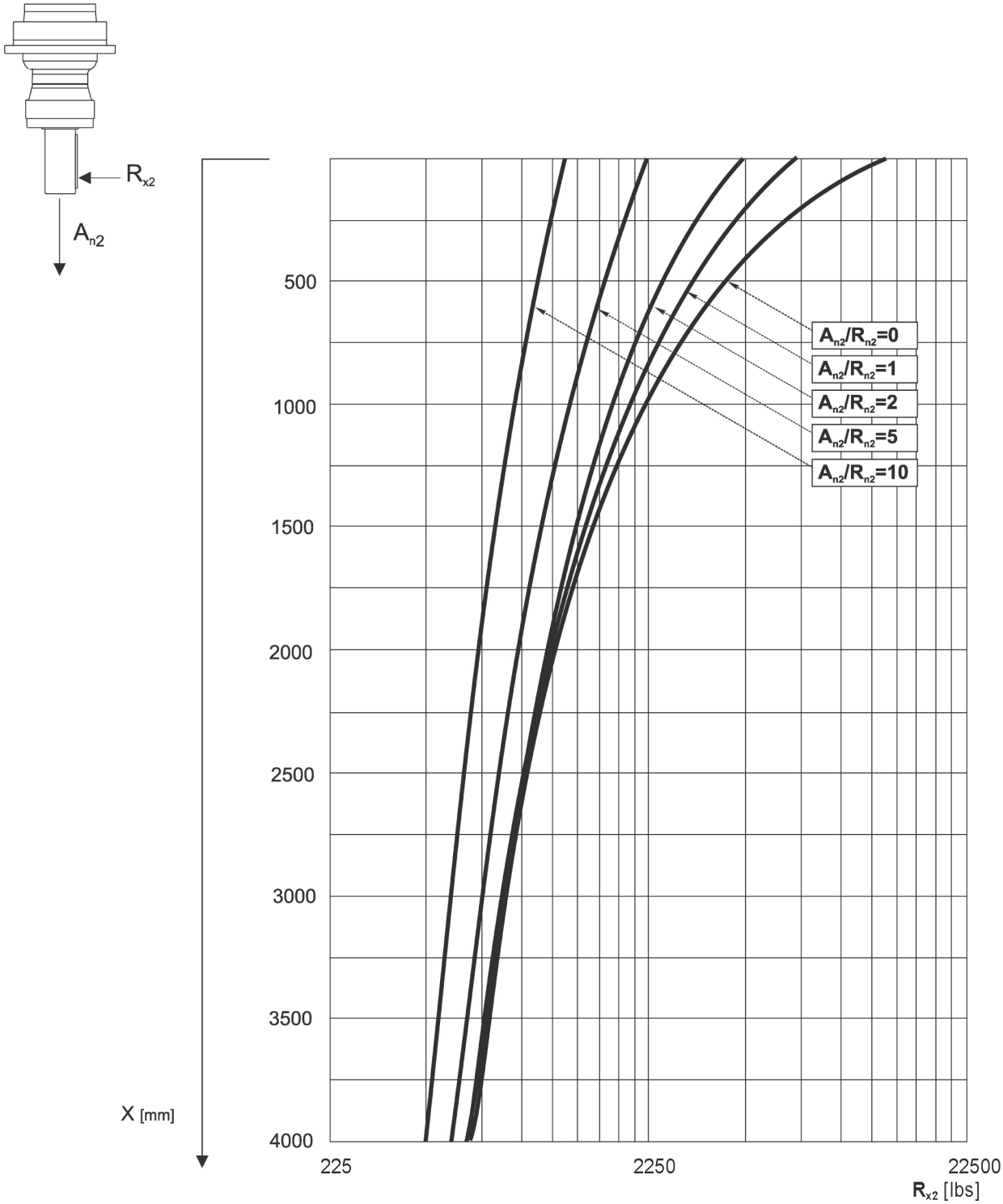

307 L

	Hydraulic motor										
	MG							542			Kg
cm³	050	080	100	125	160	200	250				
	M1							M2	M3	M4	
307 L2	—	—	—	—	203	210	219	135	77	1/4G	20

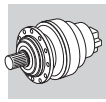

Metric

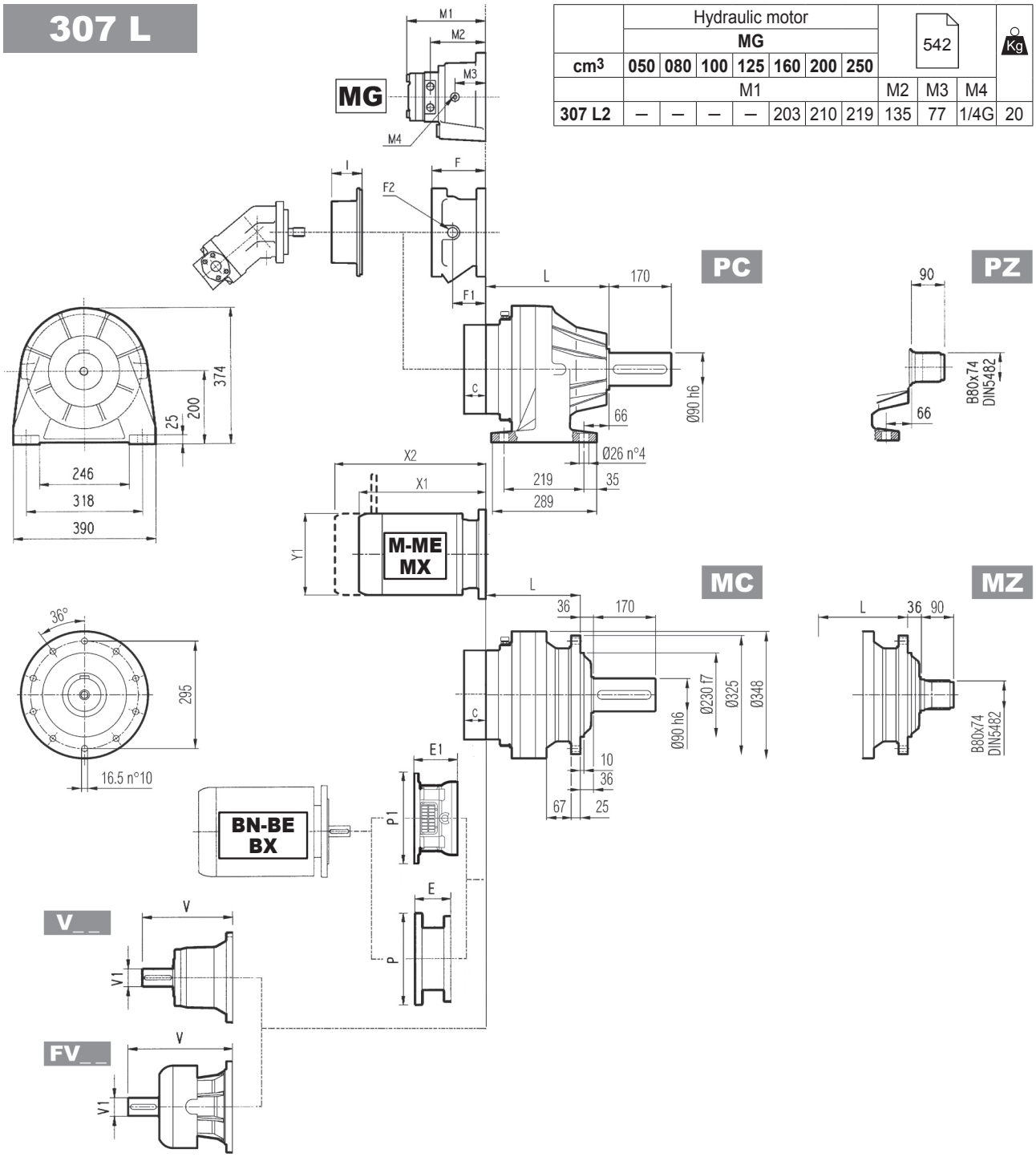

Dimensions are in mm

	L				Kg			
	MC - MZ	PC - PZ	HC - HZ	FP - FZ - FDK	MC - MZ	PC - PZ	HC - HZ	FP - FZ - FDK
307 L1	165	246	210	165	85	120	105	85
307 L2	254	335	299	254	97	132	117	97
307 L3	319	400	364	319	104	139	124	104
307 L4	372	453	417	372	108	143	128	108

	V	V1	Kg	V	V1	Kg	V	V1	Kg	V	V1	Kg	C	Input	I	F	F1	F2	Type	Input	Kg
307 L1	315	80	35	313	60	28	375	80	48	363	60	34	51	B	532	201	153	1/4 G	6	B	28
307 L2	239	48	15	—	—	—	276	48	17	—	—	—	37	A		145	95	1/4 G	5	A	16
307 L3	137.5	24	6	158	38	7	—	—	—	—	—	—	37	A		105	65	1/4 G	4	A	10
307 L4	137.5	24	6	158	38	7	—	—	—	—	—	—	37	A		105	65	1/4 G	4	A	10

307 L

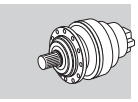

Metric

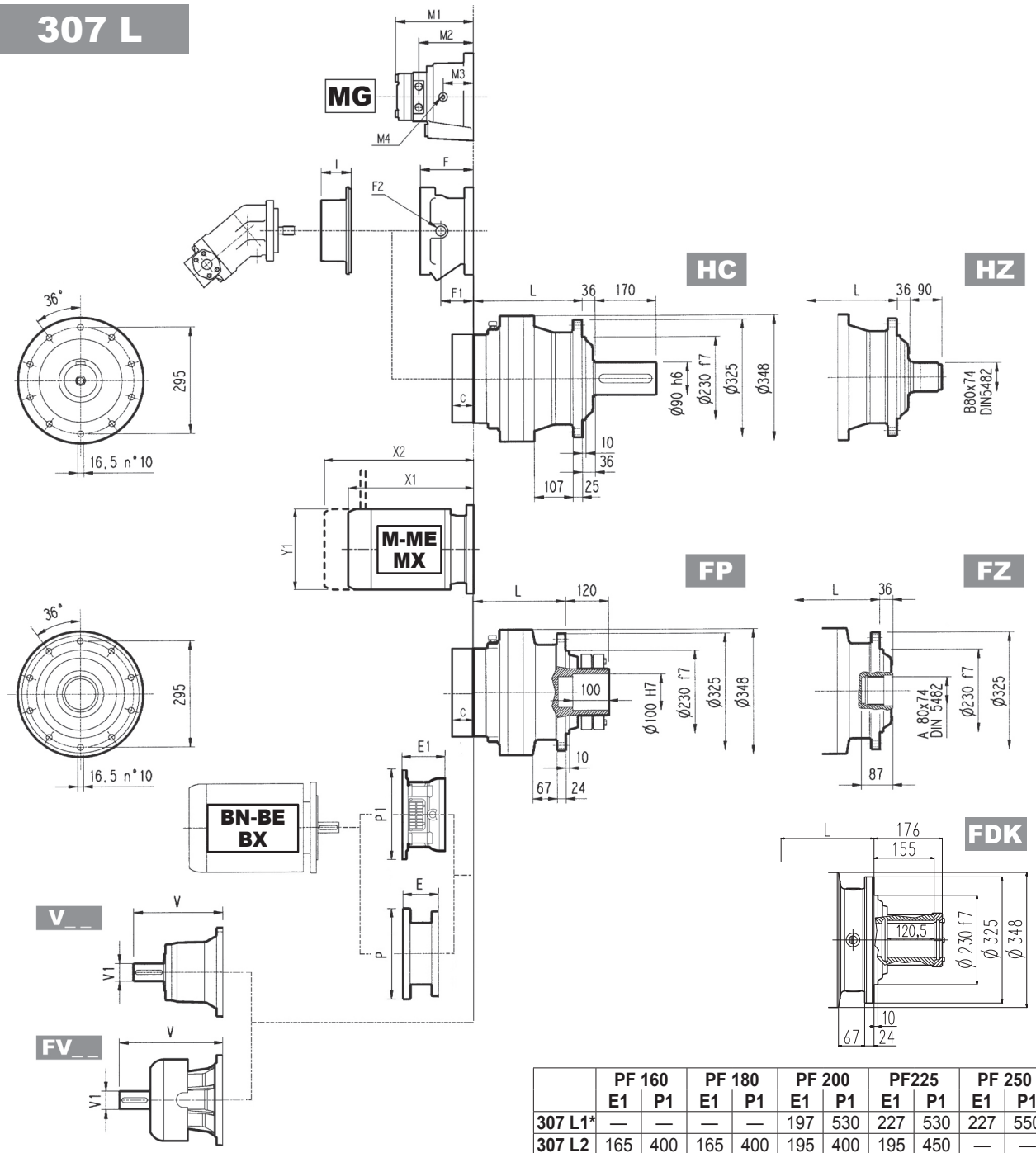

	PF 160		PF 180		PF 200		PF225		PF 250	
	E1	P1	E1	P1	E1	P1	E1	P1	E1	P1
307 L1*	—	—	—	—	197	530	227	530	227	550
307 L2	165	400	165	400	195	400	195	450	—	—
307 L3	165	400	165	400	—	—	—	—	—	—
307 L4	165	400	165	400	—	—	—	—	—	—

(*): for PC-PZ versions contact Bonfiglioli technical service
NOTE: for R design contact Bonfiglioli technical service

FP	T_{2max} = 161,080 lb·in

Dimensions are in mm

	P71		P80		P90		P100		P112		P132		P160		P180		P200		P225		P250	
	E	P	E	P	E	P	E	P	E	P	E	P	E	P	E	P	E	P	E	P	E	P
307 L1	—	—	—	—	—	—	—	—	—	—	—	—	—	—	195	350	186	400	216	450	215	550
307 L2	—	—	—	—	—	—	—	—	—	—	114	300	144	350	144	350	174	400	—	—	—	—
307 L3	65	160	84	200	84	200	94	250	94	250	114	300	144	350	—	—	—	—	—	—	—	—
307 L4	65	160	84	200	84	200	94	250	94	250	114	300	144	350	—	—	—	—	—	—	—	—

	S1 + M1			S2 + ME2S			S3 + ME3S			S3 + ME3L			S4 + ME4/MX4			S5 + ME5S/MX5S			S5 + ME5L/MX5L		
	X1	X2	Y1	X1	X2	Y1	X1	X2	Y1	X1	X2	Y1	X1	X2	Y1	X1	X2	Y1	X1	X2	Y1
307 L1	—	—	—	—	—	—	—	—	—	—	—	—	—	—	—	—	—	—	—	—	—
307 L2	—	—	—	—	—	—	—	—	—	—	—	—	460	—	258	552	—	310	596	—	310
307 L3	—	—	—	280	—	156	325	—	195	357	—	195	460	—	258	—	—	—	—	—	—
307 L4	253	314	138	280	—	156	325	—	195	357	—	195	460	—	258	—	—	—	—	—	—

307 R

	Hydraulic motor										
	MG							542			Kg
cm3	050	080	100	125	160	200	250				
	M1							M2	M3	M4	
307 R2	—	—	171	175	181	188	197	113	60	1/4G	14
307 R3	—	167	171	175	181	188	197	113	60	1/4G	14

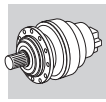

Metric

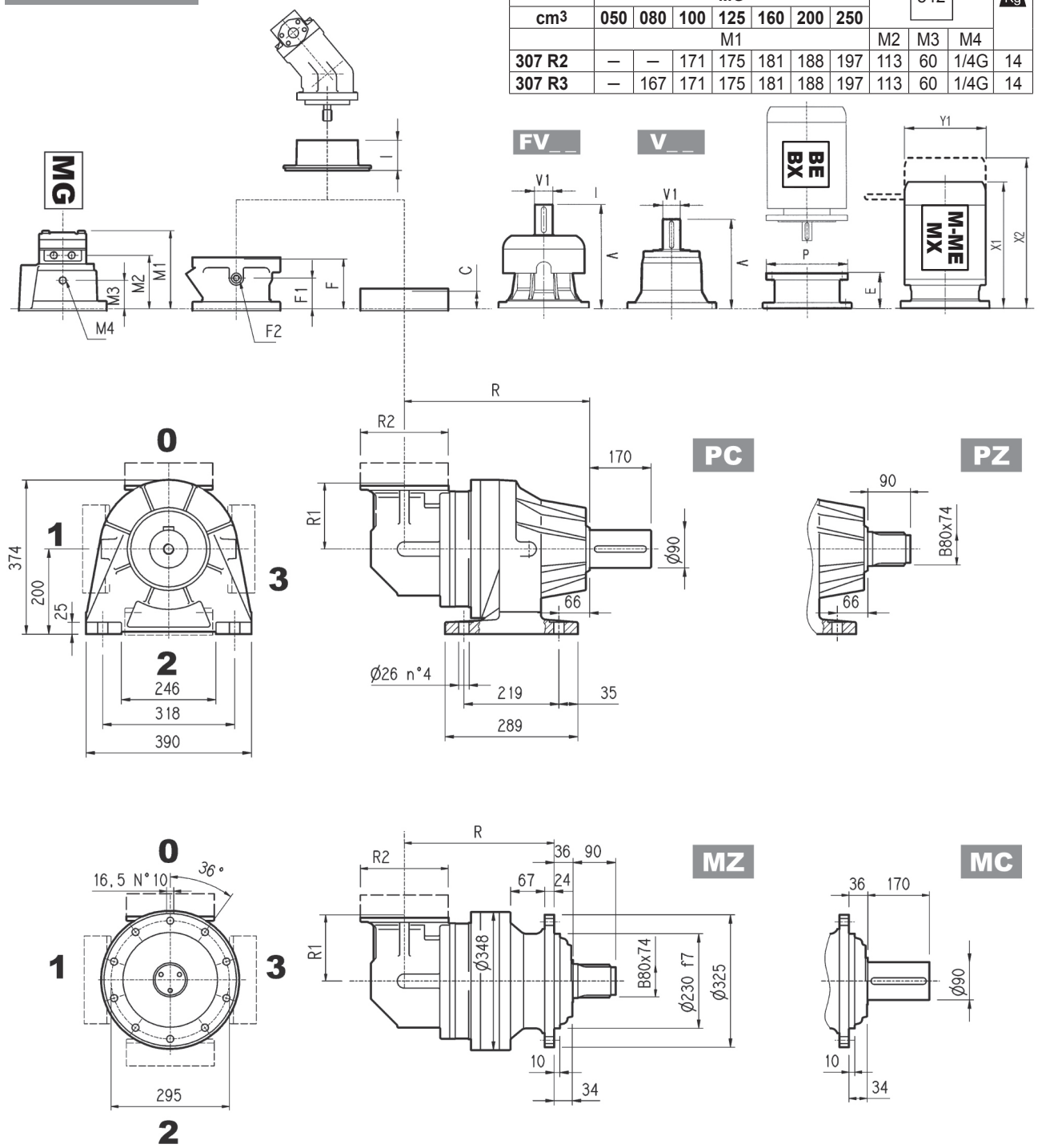

Dimensions are in mm

	R				R1	R2	Kg			
	MC - MZ	PC - PZ	HC - HZ	FP - FZ - FDK			MC - MZ	PC - PZ	HC - HZ	FP - FZ - FDK
307 R2	284	365	329	284	225	245	135	170	155	135
307 R3	346	427	391	346	140	186	117	152	137	117
307 R4	411	492	456	411	122	186	118	153	138	118

	V	V1	Kg	V	V1	Kg	V	V1	Kg	C	Input	I	F	F1	F2	Type	Input	Kg
307 R2	239	48	15	—	—	—	276	48	17	37	A		145	95	1/4 G	5	A	16
307 R3	137.5	24	6	158	38	7	—	—	—	37	A		105	65	1/4 G	4	A	10
307 R4	137.5	24	6	158	38	7	—	—	—	37	A	532	105	65	1/4 G	4	A	10

307 R

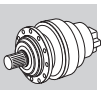

Metric

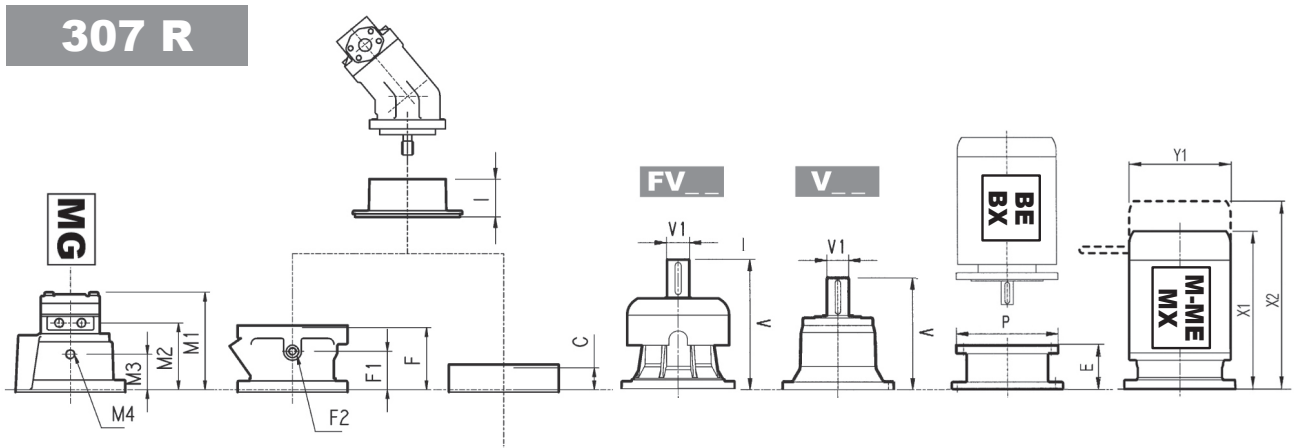

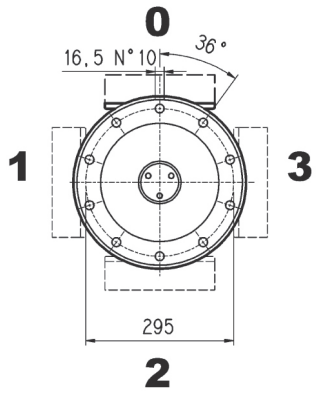

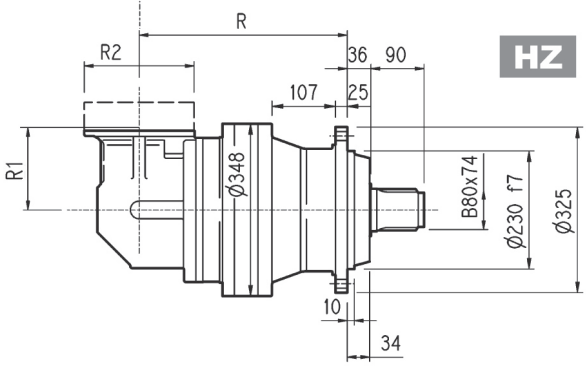

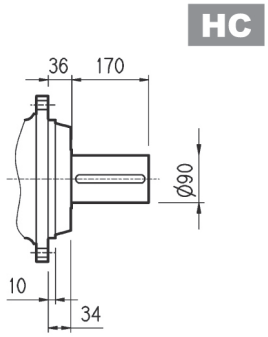

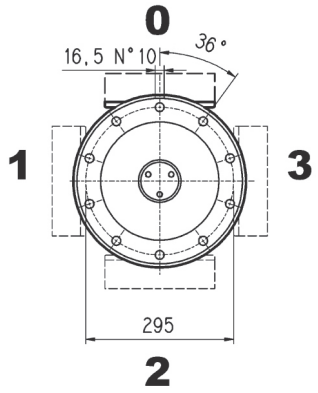

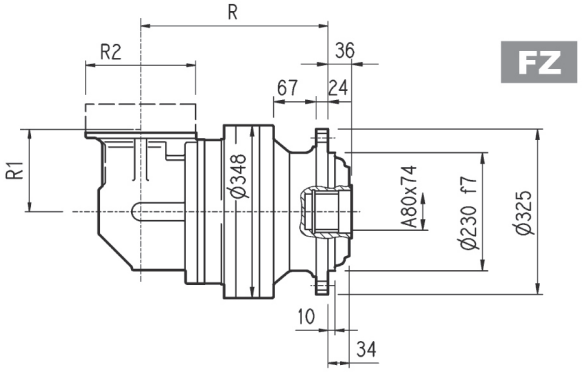

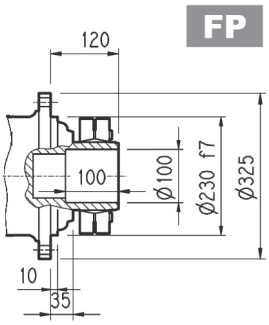

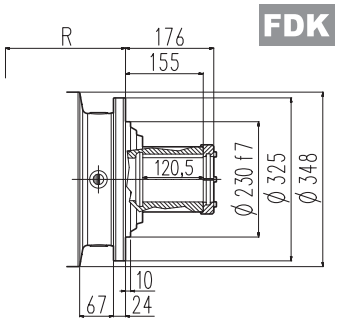

FP | **T_{2max} = 161,080 lb·in**

Dimensions are in mm

	P71		P80		P90		P100		P112		P132		P160		P180		P200	
	E	P	E	P	E	P	E	P	E	P	E	P	E	P	E	P	E	P
307 R2	—	—	—	—	—	—	—	—	—	—	114	300	144	350	144	350	174	400
307 R3	65	160	84	200	84	200	94	250	94	250	114	300	144	350	—	—	—	—
307 R4	65	160	84	200	84	200	94	250	94	250	114	300	144	350	—	—	—	—

	S1 + M1			S2 + ME2S			S3 + ME3S			S3 + ME3L			S4 + ME4/MX4			S5 + ME5S/MX5S			S5 + ME5L/MX5L		
	X1	X2	Y1	X1	X2	Y1	X1	X2	Y1	X1	X2	Y1	X1	X2	Y1	X1	X2	Y1	X1	X2	Y1
307 R2	—	—	—	—	—	—	—	—	—	—	—	—	508	—	258	552	—	310	596	—	310
307 R3	253	314	138	328	—	156	373	—	195	405	—	195	508	—	258	—	—	—	—	—	—
307 R4	253	314	138	328	—	156	373	—	195	405	—	195	508	—	258	—	—	—	—	—	—

307 L

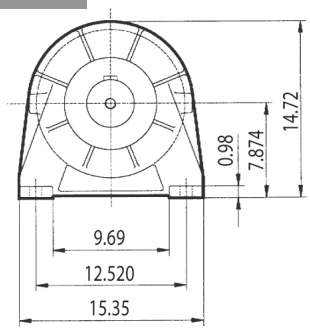

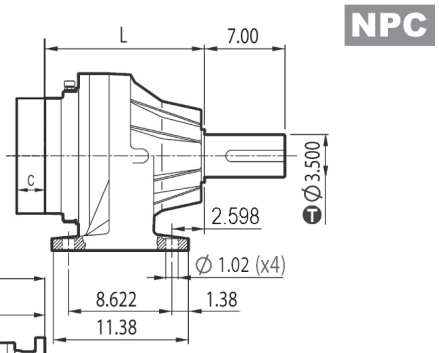

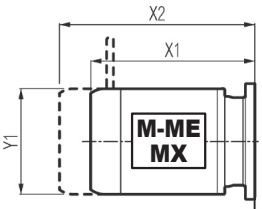

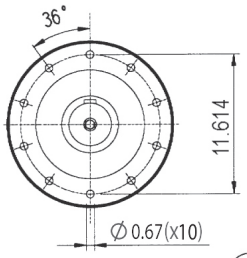

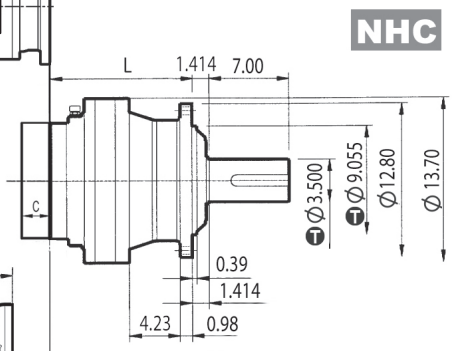

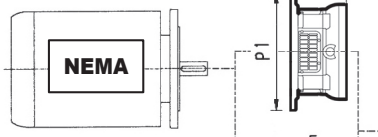

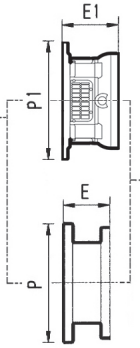

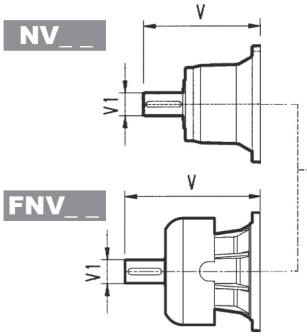

	PF N250TC		PF N280TC		PF N320TC		PF N360TC	
	E1	P1	E1	P1	E1	P1	E1	P1
307 L1*	—	—	—	—	9.921	20.866	11.496	20.866
307 L2	8.661	15.748	8.661	15.748	9.843	15.748	10.236	17.717
307 L3	8.661	15.748	8.661	15.748	—	—	—	—
307 L4	8.661	15.748	8.661	15.748	—	—	—	—

(*): for NPC versions contact Bonfiglioli Technical Service
NOTE: for R design contact Bonfiglioli Technical Service
for PF N400TC contact Bonfiglioli Technical Service

inch	T
9.055	-0.00197 / -0.00378
3.500	0 / -0.00087

Dimensions are in Inch except when shown in *italic [mm]*

	L		lbs	
	NPC	NHC	NPC	NHC
307 L1	9.67	8.27	264.6	231.5
307 L2	13.19	11.77	291.1	258.0
307 L3	15.75	14.33	306.5	273.4
307 L4	17.83	16.42	315.3	282.2

	V	V1	lbs	V	V1	lbs	V	V1	lbs	V	V1	lbs	C	Input
307 L1	12.283	3.000	77.2	13.130	2.375	29.8	14.646	3.000	90.0	15.104	2.375	38.0	1.772	B
307 L2	9.681	1.875	33.1	—	—	—	11.138	1.875	38.0	—	—	—	1.457	A
307 L3	5.996	1.125	13.2	6.437	1.625	15.4	—	—	—	—	—	—	1.457	A
307 L4	5.996	1.125	13.2	6.437	1.625	15.4	—	—	—	—	—	—	1.457	A

	N56C		N140TC		N180TC		N210TC		N250TC		N280TC		N320TC		N360TC	
	E	P	E	P	E	P	E	P	E	P	E	P	E	P	E	P
307 L1	—	—	—	—	—	—	—	—	—	—	—	—	7.78	13.78	7.78	13.78
307 L2	—	—	—	—	—	—	—	—	5.22	11.81	6.22	13.78	—	—	—	—
307 L3	4.67	6.69	4.67	6.69	5.22	8.82	5.22	8.82	5.22	8.82	6.12	11.81	—	—	—	—
307 L4	4.67	6.69	4.67	6.69	5.22	8.82	5.22	8.82	5.22	8.82	6.12	11.81	—	—	—	—

	S1 + M1			S2 + ME2S			S3 + ME3S			S3 + ME3L			S4 + ME4/MX4			S5 + ME5S/MX5S			S5 + ME5L/MX5L		
	X1	X2	Y1	X1	X2	Y1	X1	X2	Y1	X1	X2	Y1	X1	X2	Y1	X1	X2	Y1	X1	X2	Y1
307 L1	—	—	—	—	—	—	—	—	—	—	—	—	—	—	—	—	—	—	—	—	—
307 L2	—	—	—	—	—	—	—	—	—	—	—	—	18.11	—	10.16	21.73	—	12.20	23.46	—	12.20
307 L3	—	—	—	11.02	—	6.14	12.80	—	7.68	14.06	—	7.68	18.11	—	10.16	—	—	—	—	—	—
307 L4	9.96	12.36	5.43	11.02	—	6.14	12.80	—	7.68	14.06	—	7.68	18.11	—	10.16	—	—	—	—	—	—

307 R

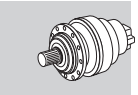

Imperial

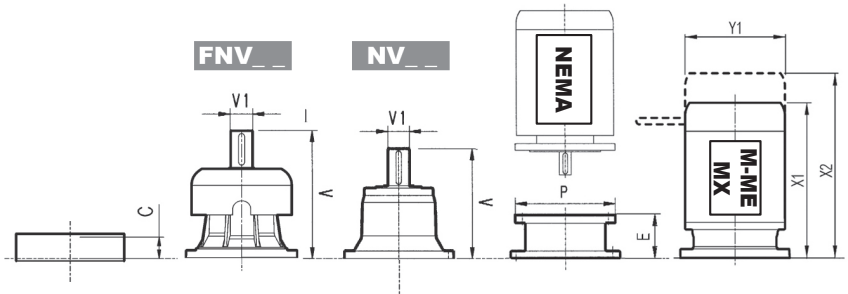

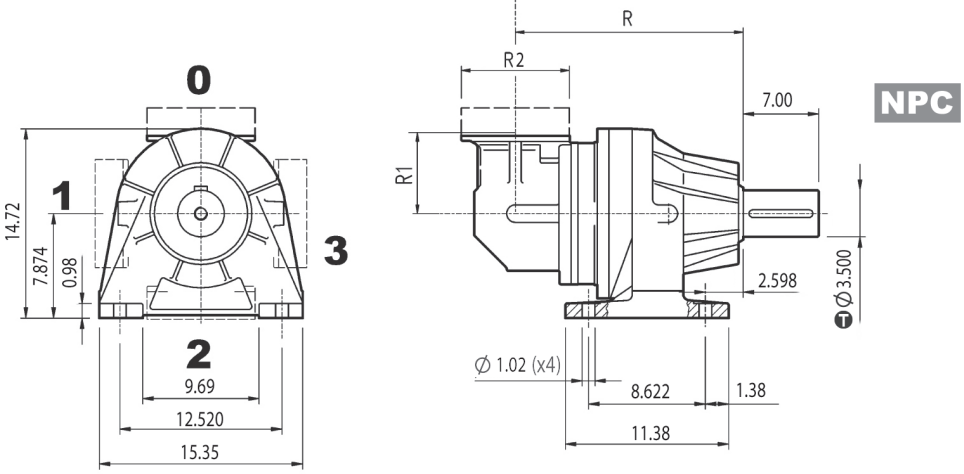

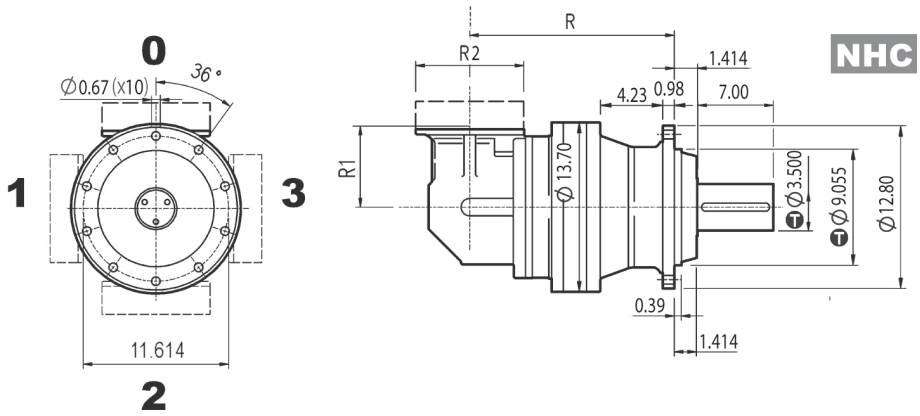

inch	Ⓣ
9.055	-0.00197 -0.00378
3.500	0 -0.00087

Dimensions are in Inch except when shown in *italic [mm]*

	R		R1	R2	lbs	
	NPC	NHC			NPC	NHC
307 R2	14.37	12.95	8.86	9.65	374.9	341.8
307 R3	16.81	15.39	5.51	7.32	335.2	302.1
307 R4	19.37	17.95	4.80	7.32	337.4	304.3

	V	V1	lbs	V	V1	lbs	V	V1	lbs	C	Input
307 R2	9.681	1.875	33.1	—	—	—	11.138	1.875	38.0	1.457	A
307 R3	5.996	1.125	13.2	6.437	1.625	15.4	—	—	—	1.457	A
307 R4	5.996	1.125	13.2	6.437	1.625	15.4	—	—	—	1.457	A

	N56C		N140TC		N180TC		N210TC		N250TC		N280TC	
	E	P	E	P	E	P	E	P	E	P	E	P
307 R2	4.67	6.69	4.67	6.69	5.22	8.82	5.22	8.82	5.22	8.82	6.12	11.81
307 R3	4.67	6.69	4.67	6.69	5.22	8.82	5.22	8.82	5.22	8.82	6.12	11.81
307 R4	4.67	6.69	4.67	6.69	5.22	8.82	5.22	8.82	5.22	8.82	6.12	11.81

	S1 + M1			S2 + ME2S			S3 + ME3S			S3 + ME3L			S4 + ME4/MX4			S5 + ME5S/MX5S			S5 + ME5L/MX5L		
	X1	X2	Y1	X1	X2	Y1	X1	X2	Y1	X1	X2	Y1	X1	X2	Y1	X1	X2	Y1	X1	X2	Y1
307 R2	—	—	—	—	—	—	—	—	—	—	—	—	20	—	10.16	21.73	—	12.20	23.46	—	12.20
307 R3	9.96	12.36	5.43	12.91	—	6.14	14.68	—	7.68	15.94	—	7.68	20	—	10.16	—	—	—	—	—	—
307 R4	9.96	12.36	5.43	12.91	—	6.14	14.68	—	7.68	15.94	—	7.68	20	—	10.16	—	—	—	—	—	—

Bonfiglioli Riduttori

3/V 07 L3

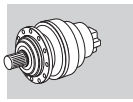

Metric

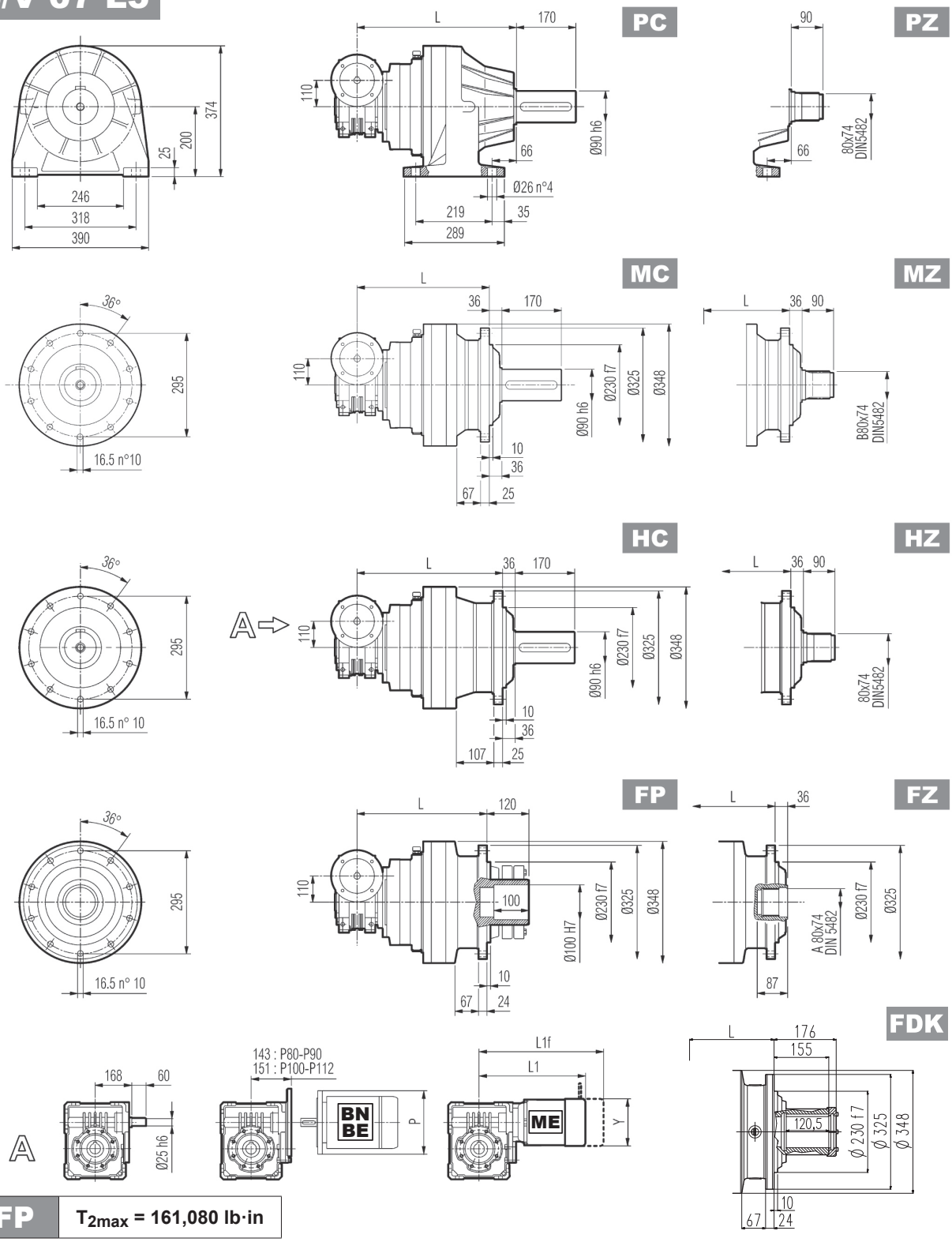

FP	T_{2max} = 161,080 lb·in

Dimensions are in mm

	L				Kg				P80	P90	P100	P112
	MC - MZ	PC - PZ	HC - HZ	FP - FZ - FDK	MC - MZ	PC - PZ	HC - HZ	FP - FZ - FDK	P	P	P	P
3/V 07 L3	414	495	459	414	130	165	150	130	200	200	250	250

	S2 + ME2S			S3 + ME3S			S3 + ME3L		
	L1	L1f	Y	L1	L1f	Y	L1	L1f	Y
3/V 07 L3	364	—	156	407	—	193	439	—	193

3/V 07 L3

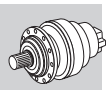

Imperial

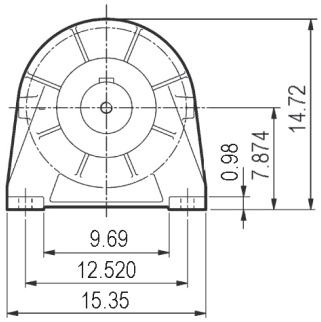

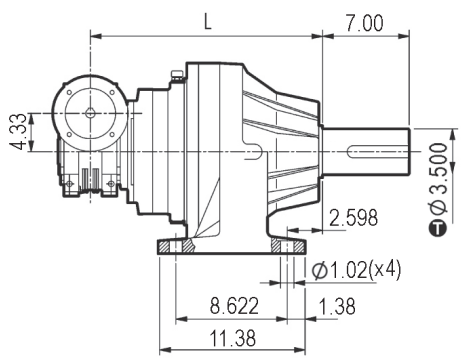

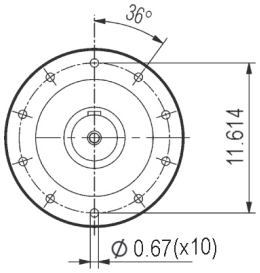

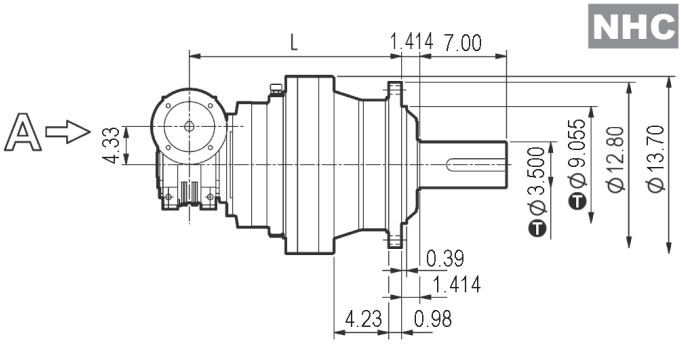

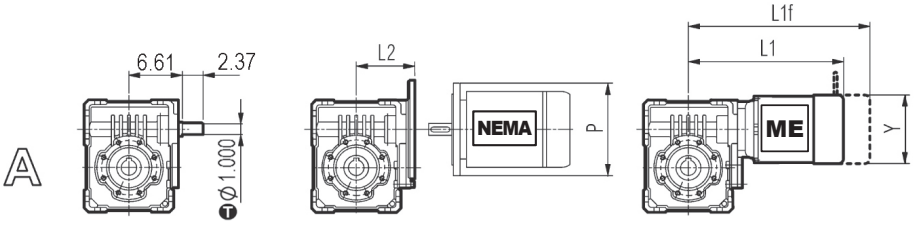

inch	T
9.055	-0.00197 -0.00378
3.500	0 -0.00087
1.000	0 -0.00051

Dimensions are in Inch except when shown in *italic [mm]*

	L		lbs		N140TC		N180TC		N210TC	
	NPC	NHC	NPC	NHC	P	L2	P	L2	P	L2
3/V 07 L3	19.49	18.07	363.8	330.8	6.54	5.96	9.02	6.67	9.02	9.17

	S2 + ME2S			S3 + ME3S			S3 + ME3L		
	L1	L1f	Y	L1	L1f	Y	L1	L1f	Y
3/V 07 L3	14.33	—	6.14	16.024	—	7.59	17.28	—	7.59

3/A 07 L2

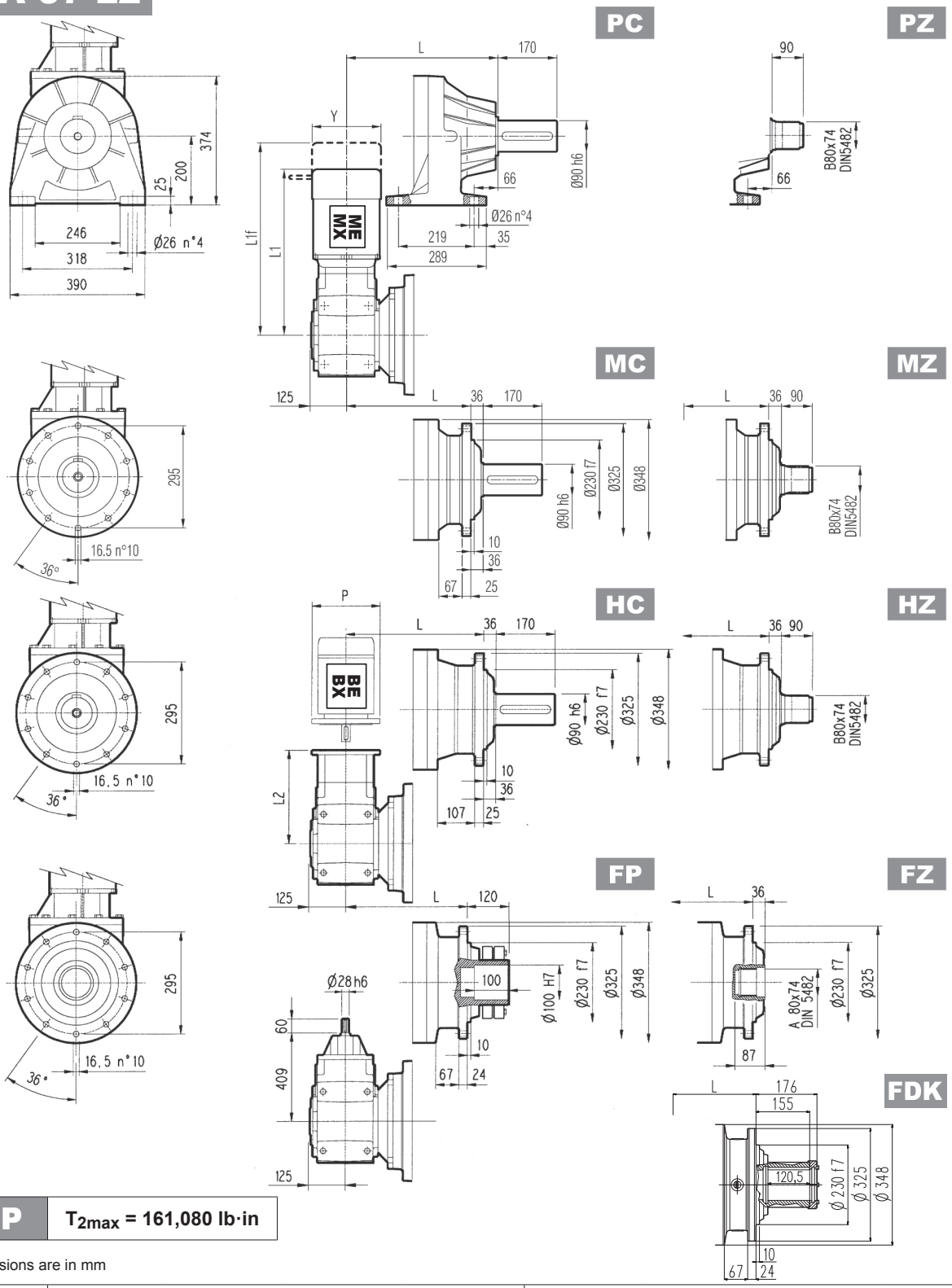

FP	T_{2max} = 161,080 lb·in

Dimensions are in mm

	L				Kg			
	MC - MZ	PC - PZ	HC - HZ	FP - FZ - FDK	MC - MZ	PC - PZ	HC - HZ	FP - FZ - FDK
3/A 07 L2	336	417	381	336	200	230	210	200

	P80		P90		P100		P112		P132		P160		P180	
	L2	P	L2	P	L2	P	L2	P	L2	P	L2	P	L2	P
3/A 07 L2	371	200	371	200	381	250	381	250	416.5	300	468	350	468	350

	S2 + ME2S			S3 + ME3S			S3 + ME3L			S4 + ME4/MX4			S5 + ME5S/MX5S			S5 + ME5L/MX5L		
	L1	L1f	Y	L1	L1f	Y	L1	L1f	Y	L1	L1f	Y	L1	L1f	Y	L1	L1f	Y
3/A 07 L2	535	—	156	578.5	—	195	610.5	—	195	718.5	—	258	970	—	—	1014	—	—

3/A 07 L2

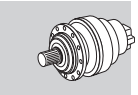

Imperial

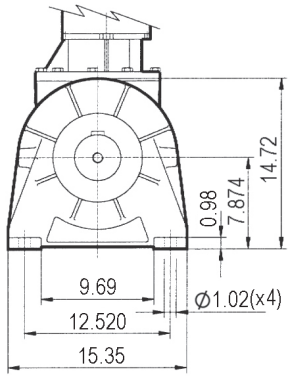

NPC

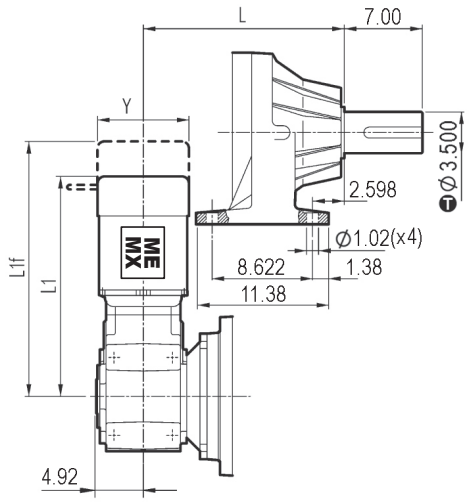

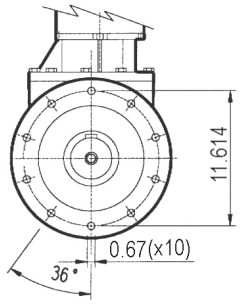

NHC

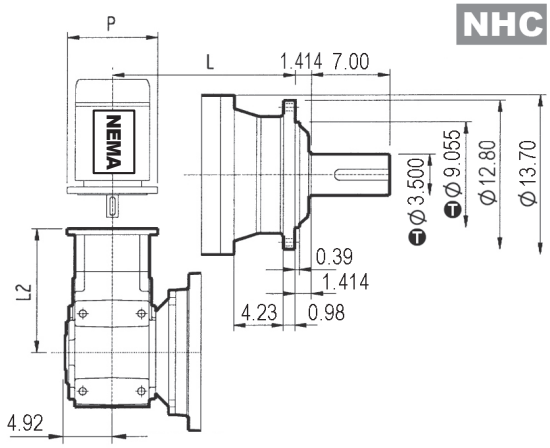

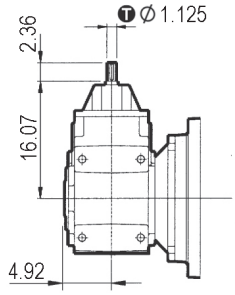

inch	T
9.055	-0.00197 -0.00378
3.500	0 -0.00087
1.125	0 -0.00051

Dimensions are in Inch except when shown in *italic [mm]*

	L		lbs		N140TC		N180TC		N210TC		N250TC		N280TC	
	NPC	NHC	NPC	NHC	L2	P	L2	P	L2	P	L2	P	L2	P
3/A 07 L2	16.42	15.00	507.2	463.1	14.63	6.50	15.37	9.00	16.61	9.00	19.41	13.78	19.61	13.78

	S2 + ME2S			S3 + ME3S			S3 + ME3L			S4 + ME4/MX4			S5 + ME5S/MX5S			S5 + ME5L/MX5L		
	L1	L1f	Y	L1	L1f	Y	L1	L1f	Y	L1	L1f	Y	L1	L1f	Y	L1	L1f	Y
3/A 07 L2	21.06	—	6.14	22.78	—	7.68	24.04	—	7.68	28.29	—	10.16	38.19	—	—	39.92	—	—

Bonfiglioli Riduttori

307 L | 307 R | 3/V 07 L3 | 3/A 07 L2

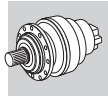

Metric

Imperial

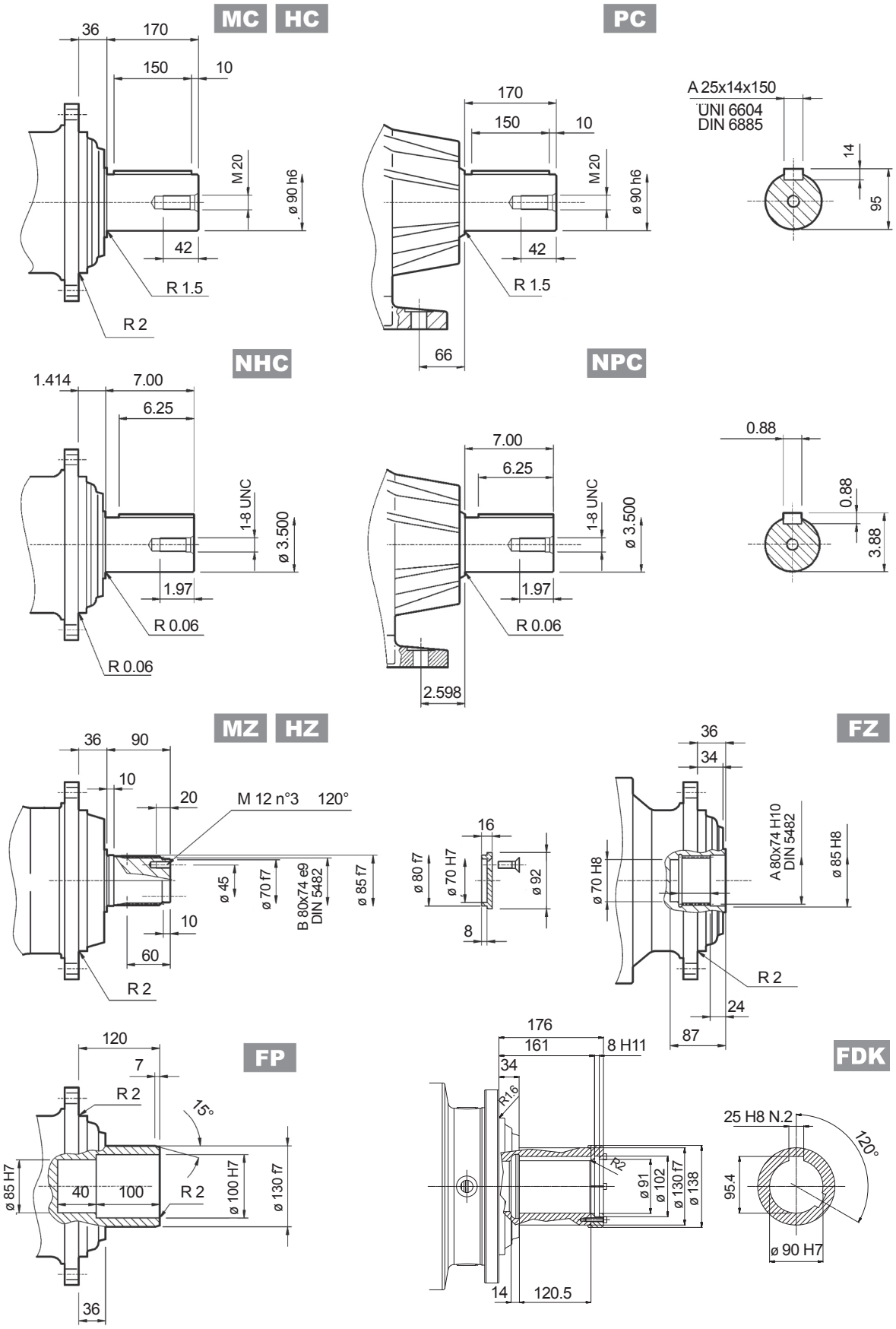

FP	T_{2max} = 161,080 lb·in

Dimensions are in mm when shown in italic, otherwise dimensions are in inches

inch	T
3.500	0 / -0.00087

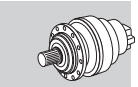

Flange

W0A

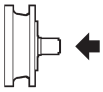

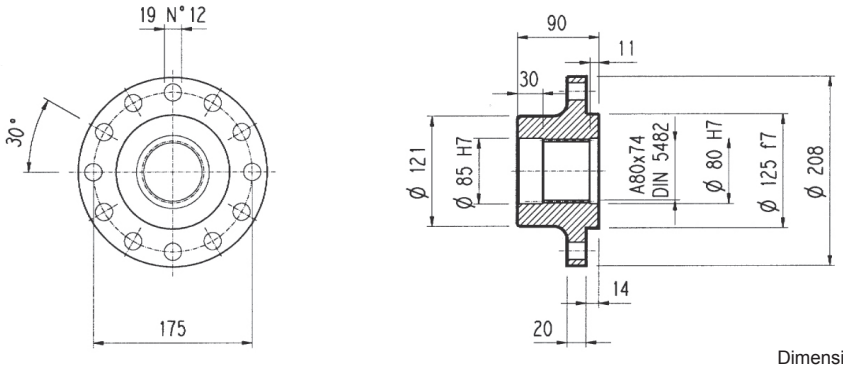

Material: Steel C40

Dimensions are in mm

Pinions

P...

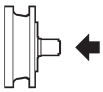

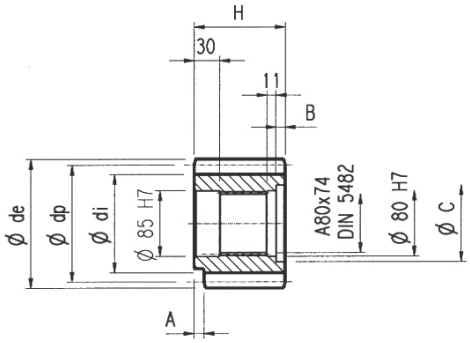

Dimensions are in mm

α = 20°

	m	z	x	dp	di	de	H	A	B	C	Material
PFG	8	16	0.500	128	117	149.5	90	—	—	—	Steel 39NiCrMo3 hardened and tempered
PHC	10	12	0.450	120	104	145	90	—	—	—	
PHE	10	14	0.320	140	121	165	116	13	26	95	
PHF	10	15	0.150	150	130	171.5	107	20	17	100	
PHG	10	16	0.500	160	145	186	90	—	—	—	Steel 18NiCrMo5 case hardened
PHH1	10	17	—	170	145	189	90	—	—	—	
PHH2	10	17	0.500	170	154	198	90	—	—	—	
PLD	12	13	0.500	156	138	192	102	—	12	95	Steel 39NiCrMo3 hardened and tempered
PLE	12	14	0.500	168	150	199.2	90	—	—	—	
PLI	12	18	0.500	216	198	249.6	107	7	17	95	
PLT	12	26	—	312	282	336	90	10	—	—	Steel 18NiCrMo5 case hardened

Sleeve coupling

M0A

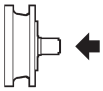

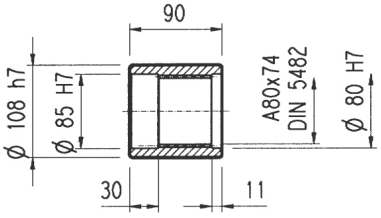

Material: Steel 16CrNi4

Dimensions are in mm

Splined bars

B0A

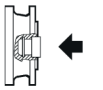

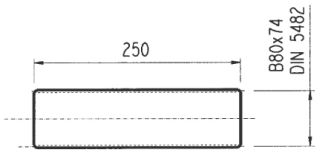

Material: Case hardening steel 18NiCrMo5 UNI 5331
must be case hardened 50-55 HRC

Shrink disc

G0A

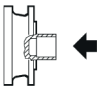

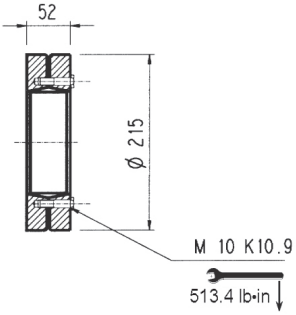

Dimensions are in mm

307 L 307 R

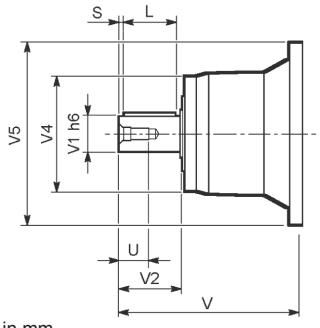

V_ _

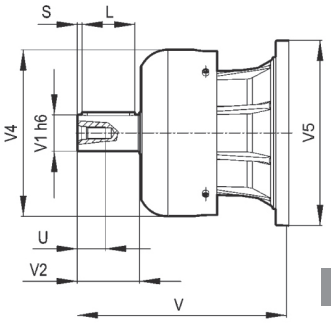

FV_ _

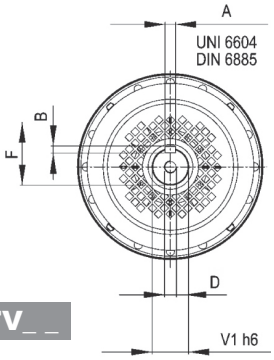

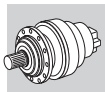

Dimensions are in mm

		V	V1	V2	V4	V5	A	B	F	L	S	D	U
307 L1	**V07B**	315	80	130	200	345	22	14	85	110	10	M16	36
	FV07B	375	80	130	347.5	348	22	14	85	110	10	M16	36
	V07A	313	60	105	155	345	18	11	64	90	7.5	M16	36
	FV07A	363	60	105	309	348	18	11	64	90	7.5	M16	36
307 L2	**V05B**	239	48	82	155	245	14	9	51.5	70	6	M16	36
	FV05B	276	48	82	219.5	244	14	9	51.5	70	6	M16	36
307 L3	**V01A**	137.5	24	36	120	186	8	7	27	30	3	M8	19
	V01B	158	38	58	120	186	10	8	41	50	4	M12	28
307 L4	**V01A**	137.5	24	36	120	186	8	7	27	30	3	M8	19
	V01B	158	38	58	120	186	10	8	41	50	4	M12	28
307 R2	**V05B**	239	48	82	155	245	14	9	51.5	70	6	M16	36
	FV05B	276	48	82	219.5	244	14	9	51.5	70	6	M16	36
307 R3-R4	**V01A**	137.5	24	36	120	186	8	7	27	30	3	M8	19
	V01B	158	38	58	120	186	10	8	41	50	4	M12	28

307 L 307 R

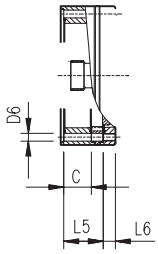

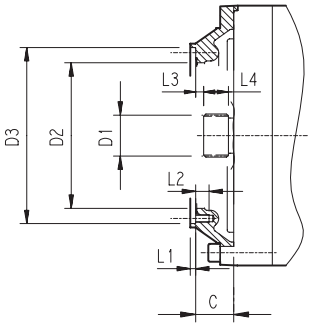

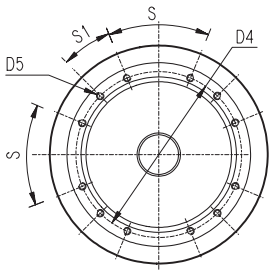

Dimensions are in mm

		C	D1	D2	D3	D4	D5	D6	L1	L2	L3	L4	L5	L6	S	S1	Input
307 L1	**V9AB**	51	58x53 DIN 5482	195	236 H7	222	M10 n°12	—	4	18	11	22	—	—	45°	22.5°	B
307 L2	**V9AA**	37	40x36 DIN 5482	140	178 H7	165	M10 n°8	—	4	18	9	18	—	—	45°	45°	A
307 L3	**V9AA**	37	40x36 DIN 5482	140	178 H7	165	M10 n°8	11	4	—	9	18	65	18	45°	45°	A
307 L4	**V9AA**	37	40x36 DIN 5482	140	178 H7	165	M10 n°8	11	4	—	9	18	118	18	45°	45°	A
307 R2	**V9AA**	37	40x36 DIN 5482	140	178 H7	165	M10 n°8	11	4	18	9	18	—	—	45°	45°	A
307 R3-R4	**V9AA**	37	40x36 DIN 5482	140	178 H7	165	M10 n°8	11	4	—	9	18	37	18	45°	45°	A

3/V 07 L3

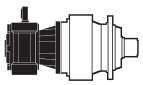
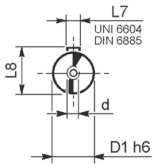

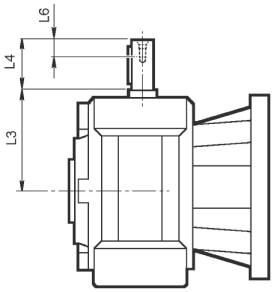

Dimensions are in mm

	D1 h6	L3	L4	L6	L7	L8	d
3/V 07 L3_HS	25	168	60	19	8	28	M8

3/A 07 L2

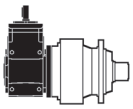
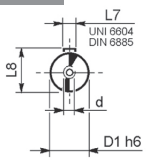

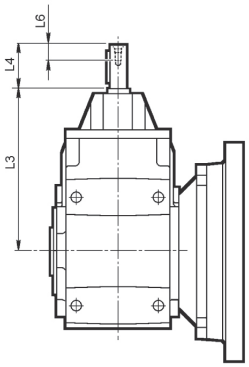

Dimensions are in mm

	D1 h6	L3	L4	L6	L7	L8	d
3/A 07 L2_HS	28	409	60	22	8	31	M10

Imperial

307 L 307 R

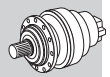

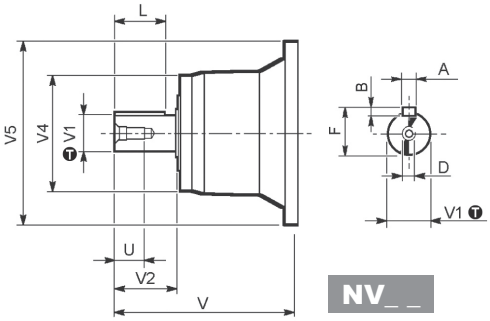

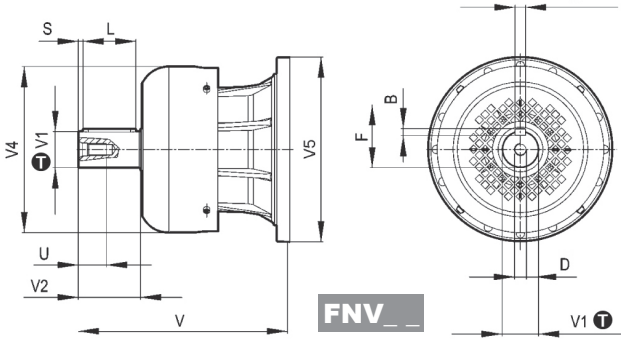

inch	T
3.000	0 -0.00075
2.375	0 -0.00053
1.875	0 -0.00053
1.625	0 -0.00053
1.125	0 -0.00051

Dimensions are in Inch except when shown in *italic [mm]*

		V	V1	V2	V4	V5	A	B	F	L	D	U
307 L1	**NV07B**	12.283	3.000	5.000	7.165	13.699	0.750	0.750	3.328	4.374	3/4 -10 UNC	1.654
	FNV07B	14.646	3.000	5.000	13.677	13.699	0.750	0.750	3.328	4.374	3/4 -10 UNC	1.654
	NV07A	13.130	2.375	4.750	6.024	13.700	0.625	0.625	2.645	4.250	3/4 -10 UNC	1.654
	FNV07A	15.104	2.375	4.750	6.811	13.700	0.625	0.625	2.645	4.250	3/4 -10 UNC	1.654
307 L2	**NV05B**	9.681	1.875	3.500	6.417	9.606	0.500	0.500	2.091	3.000	5/8-11 UNC	1.417
	FNV05B	11.138	1.875	3.500	8.641	9.606	0.500	0.500	2.091	3.000	5/8-11 UNC	1.417
307 L3	**NV01A**	5.996	1.125	2.000	4.980	7.323	0.250	0.250	1.236	1.752	3/8-16 UNC	0.866
	NV01B	6.437	1.625	2.500	4.980	7.323	0.375	0.375	1.791	2.000	1/2-13 UNC	1.102
307 L4	**NV01A**	5.996	1.125	2.000	4.980	7.323	0.250	0.250	1.236	1.752	3/8-16 UNC	0.866
	NV01B	6.437	1.625	2.500	4.980	7.323	0.375	0.375	1.791	2.000	1/2-13 UNC	1.102
307 R2	**NV05B**	9.681	1.875	3.500	6.417	9.606	0.500	0.500	2.091	3.000	5/8-11 UNC	1.417
	FNV05B	11.138	1.875	3.500	8.641	9.606	0.500	0.500	2.091	3.000	5/8-11 UNC	1.417
307 R3-R4	**NV01A**	5.996	1.125	2.000	4.980	7.323	0.250	0.250	1.236	1.752	3/8-16 UNC	0.866
	NV01B	6.437	1.625	2.500	4.980	7.323	0.375	0.375	1.791	2.000	1/2-13 UNC	1.102

307 L 307 R

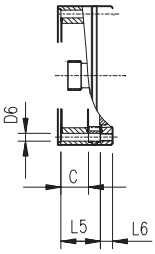

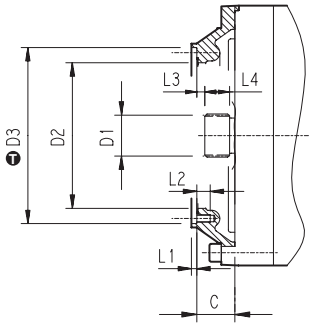

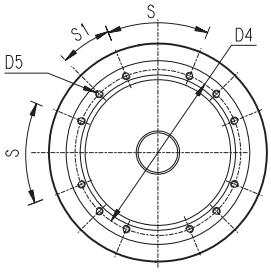

inch	T
9.29	+0.00181 0
7.01	+0.00157 0

Dimensions are in Inch except when shown in *italic [mm]*

		C	D1	D2	D3	D4	D5	D6	L1	L2	L3	L4	L5	L6	S	S1	Input
307 L1	**V9AB**	1.77	*58x53 DIN5482*	7.68	9.29	8.74	*M10 n°12*	—	0.16	0.71	0.43	0.87	—	—	45°	22.5°	B
307 L2	**V9AA**	1.46	*40x36 DIN5482*	5.51	7.01	6.50	*M10 n°8*	—	0.16	0.71	0.35	0.71	—	—	45°	45°	A
307 L3	**V9AA**	1.46	*40x36 DIN5482*	5.51	7.01	6.50	*M10 n°8*	0.43	0.16	—	0.35	0.71	4.65	0.71	45°	45°	A
307 L4	**V9AA**	1.46	*40x36 DIN5482*	5.51	7.01	6.50	*M10 n°8*	0.43	0.16	—	0.35	0.71	6.73	0.71	45°	45°	A
307 R2	**V9AA**	1.46	*40x36 DIN5482*	5.51	7.01	6.50	*M10 n°8*	—	0.16	0.71	0.35	0.71	—	—	45°	45°	A
307 R3-R4	**V9AA**	1.46	*40x36 DIN5482*	5.51	7.01	6.50	*M10 n°8*	0.43	0.16	—	0.35	0.71	1.46	0.71	45°	45°	A

3/V 07 L3

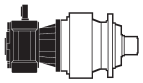

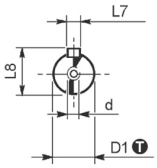

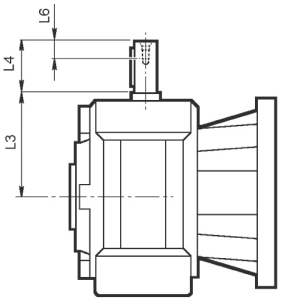

inch	T
1.000	0 -0.00051

Dimensions are in Inch except when shown in *italic [mm]*

	D1	L3	L4	L6	L7	L8	d
3/V 07 L3_NHS	1.000	6.61	1.969	0.75	0.250	1.109	3/8-16UNC

3/A 07 L2

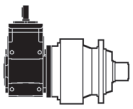

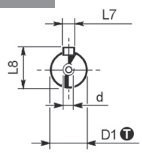

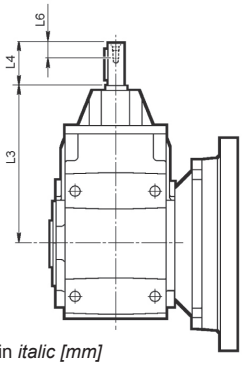

inch	T
1.125	0 -0.00051

Dimensions are in Inch except when shown in *italic [mm]*

	D1	L3	L4	L6	L7	L8	d
3/A 07 L2_NHS	1.125	16.07	2.362	0.866	0.250	1.236	3/8-16UNC

Permissible radial and axial loads on output shaft with $Fh_2 : n_2 \cdot h = 100000$

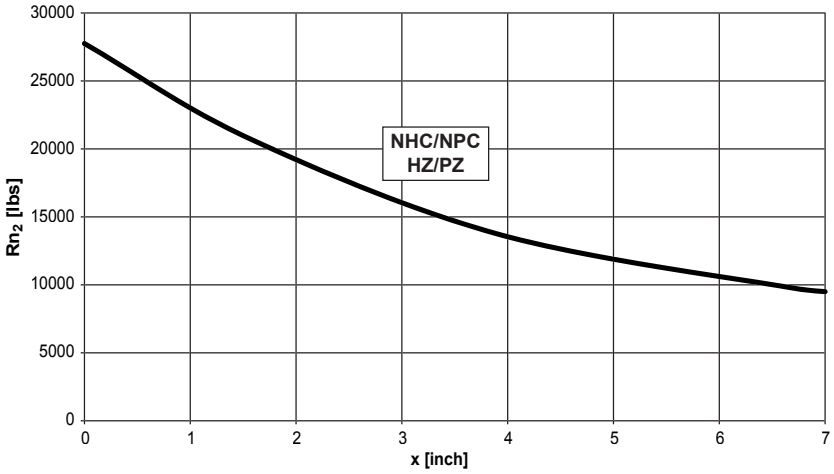

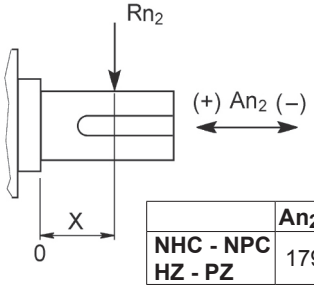

	An_2 (+)	An_2 (-)
NHC - NPC HZ - PZ	17984	8992

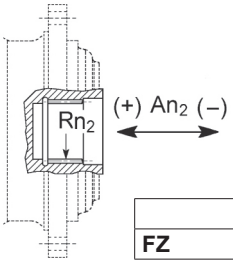

	Rn_2	An_2 (+/-)
FZ	4695	4695

Load corrective factor fh_2 on shafts	$Fh_2 = n_2 \cdot h$		10000	25000	50000	100000	500000	1000000
	fh_2	FZ	**2.15**	**1.59**	**1.26**	**1.00**	**0.58**	**0.46**
		NHC - NPC - HZ -PZ	**1.49**	**1.49**	**1.23**	**1.00**	**0.62**	**0.50**

Permissible radial loads on input shaft with $Fh_1 : n_1 \cdot h = 250000$

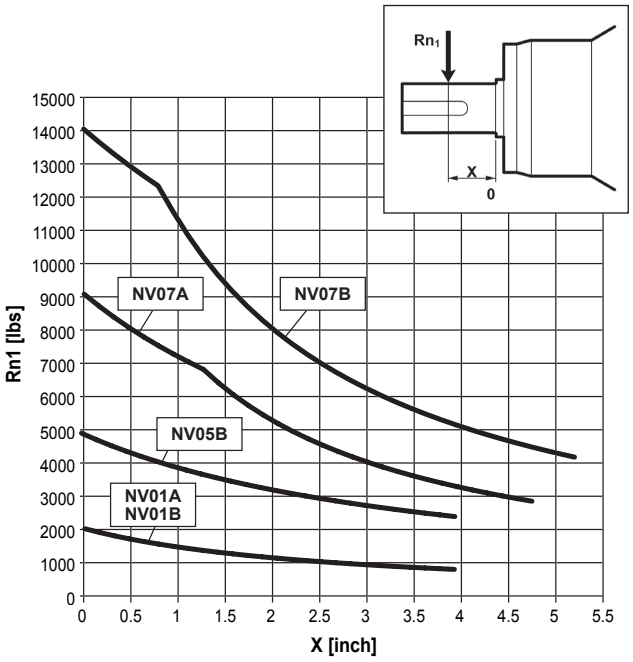

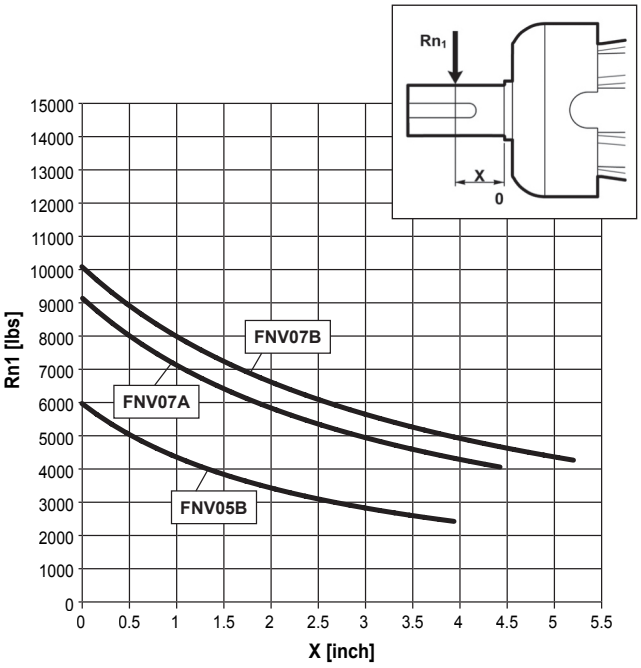

Load corrective factor fh_1 on shafts	$Fh_1 = n_1 \cdot h$	250000	500000	1000000	2000000	5000000	10000000
	fh_1	**1**	**0.79**	**0.63**	**0.50**	**0.37**	**0.29**

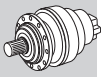

307 VK

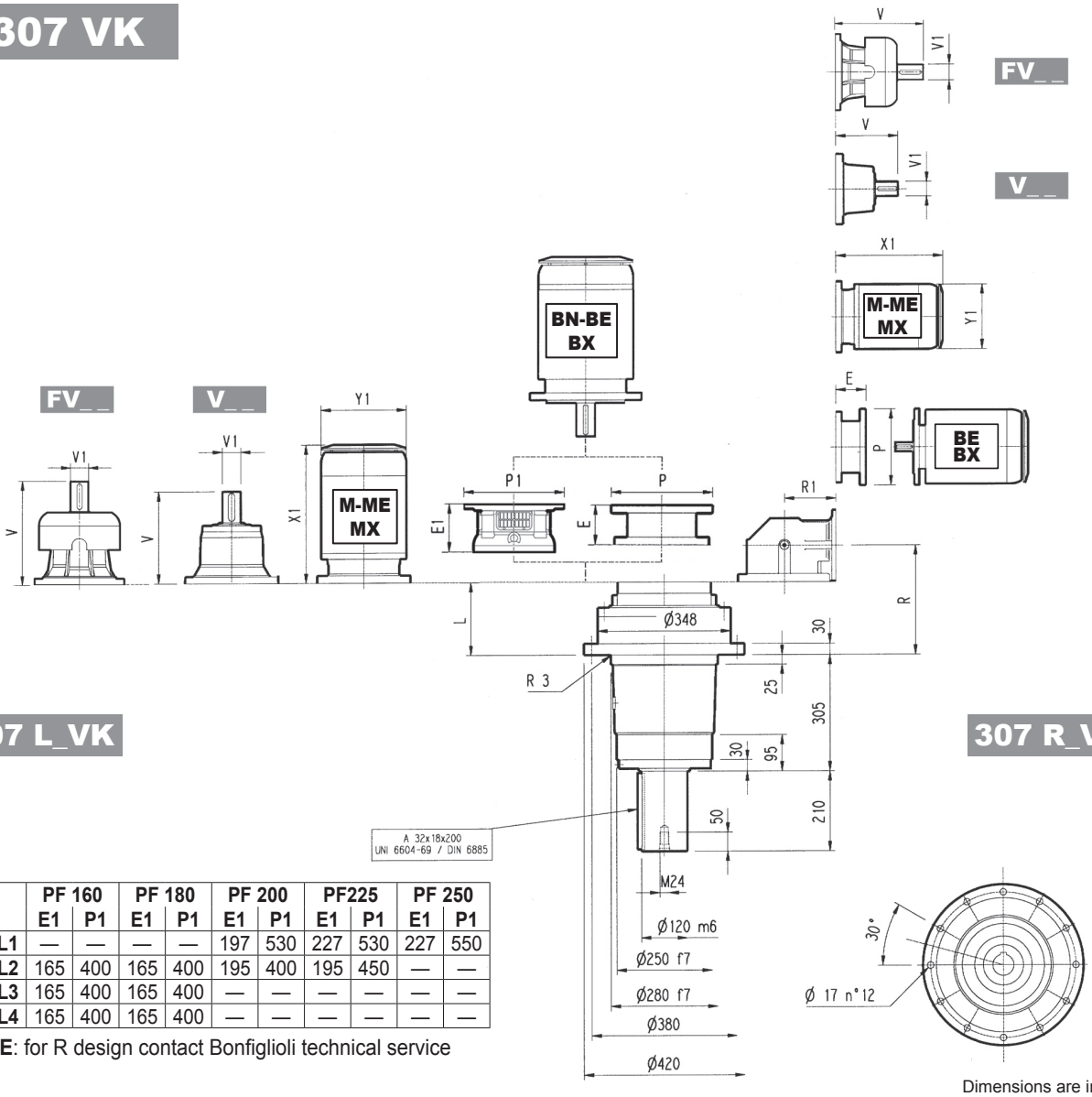

307 L_VK

307 R_VK

	PF 160		PF 180		PF 200		PF225		PF 250	
	E1	P1	E1	P1	E1	P1	E1	P1	E1	P1
307 L1	—	—	—	—	197	530	227	530	227	550
307 L2	165	400	165	400	195	400	195	450	—	—
307 L3	165	400	165	400	—	—	—	—	—	—
307 L4	165	400	165	400	—	—	—	—	—	—

NOTE: for R design contact Bonfiglioli technical service

Dimensions are in mm

	L	Kg	V	V1	Kg	V	V1	Kg	V	V1	Kg	V	V1	Kg	P71		P80		P90		P100		P112		P132		P160		P180		P200		P225		P250	
															E	P	E	P	E	P	E	P	E	P	E	P	E	P	E	P	E	P	E	P	E	P
307 L1	80	145	315	80	35	313	60	28	375	80	48	363	60	34	—	—	—	—	—	—	—	—	—	—	—	—	—	—	195	350	186	400	216	450	215	550
307 L2	169	160	239	48	15	—	—	—	276	48	17	—	—	—	—	—	—	—	—	—	—	—	—	—	114	300	144	350	144	350	174	400	—	—	—	—
307 L3	234	170	137.5	24	6	158	38	7	—	—	—	—	—	—	65	160	84	200	84	200	94	250	94	250	114	300	144	350	—	—	—	—	—	—	—	—
307 L4	287	175	137.5	24	6	158	38	7	—	—	—	—	—	—	65	160	84	200	84	200	94	250	94	250	114	300	144	350	—	—	—	—	—	—	—	—

	S1 + M1			S2 + ME2S			S3 + ME3S			S3 + ME3L			S4 + ME4/MX4			S5 + ME5S/MX5S			S5 + ME5L/MX5L		
	X1	X2	Y1	X1	X2	Y1	X1	X2	Y1	X1	X2	Y1	X1	X2	Y1	X1	X2	Y1	X1	X2	Y1
307 L1	—	—	—	—	—	—	—	—	—	—	—	—	—	—	—	—	—	—	—	—	—
307 L2	—	—	—	—	—	—	—	—	—	—	—	—	460	—	258	552	—	310	596	—	310
307 L3	—	—	—	280	—	156	325	—	195	357	—	195	460	—	258	—	—	—	—	—	—
307 L4	253	314	138	280	—	156	325	—	195	357	—	195	460	—	258	—	—	—	—	—	—

	R	R1	Kg	V	V1	Kg	V	V1	Kg	V	V1	Kg	V	V1	Kg	P71		P80		P90		P100		P112		P132		P160		P180		P200	
																E	P	E	P	E	P	E	P	E	P	E	P	E	P	E	P	E	P
307 R2	199	225	180	239	48	15	—	—	—	276	48	17	—	—	—	—	—	—	—	—	—	—	—	—	—	114	300	144	350	144	350	174	400
307 R3	261	140	170	137.5	24	6	158	38	7	—	—	—	—	—	—	65	160	84	200	84	200	94	250	94	250	114	300	144	350	—	—	—	—
307 R4	326	122	175	137.5	24	6	158	38	7	—	—	—	—	—	—	65	160	84	200	84	200	94	250	94	250	114	300	144	350	—	—	—	—

	S1 + M1			S2 + ME2S			S3 + ME3S			S3 + ME3L			S4 + ME4/MX4			S5 + ME5S/MX5S			S5 + ME5L/MX5L		
	X1	X2	Y1	X1	X2	Y1	X1	X2	Y1	X1	X2	Y1	X1	X2	Y1	X1	X2	Y1	X1	X2	Y1
307 R2	—	—	—	—	—	—	—	—	—	—	—	—	508	—	258	552	—	310	596	—	310
307 R3	253	314	138	328	—	156	373	—	195	405	—	195	508	—	258	—	—	—	—	—	—
307 R4	253	314	138	328	—	156	373	—	195	405	—	195	508	—	258	—	—	—	—	—	—

307 VK

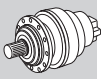

Metric

The diagram below allows the calculation of permitted overhung load R_{x2} on the output shaft of gearbox, with radial force applying at a distance x from shaft shoulder.
The curves are relevant to value resulting from the relationship of trust load A_{n2} to radial load R_{n2}, based on n_2 = 10 rpm and 10000 hrs theoretical lifetime.

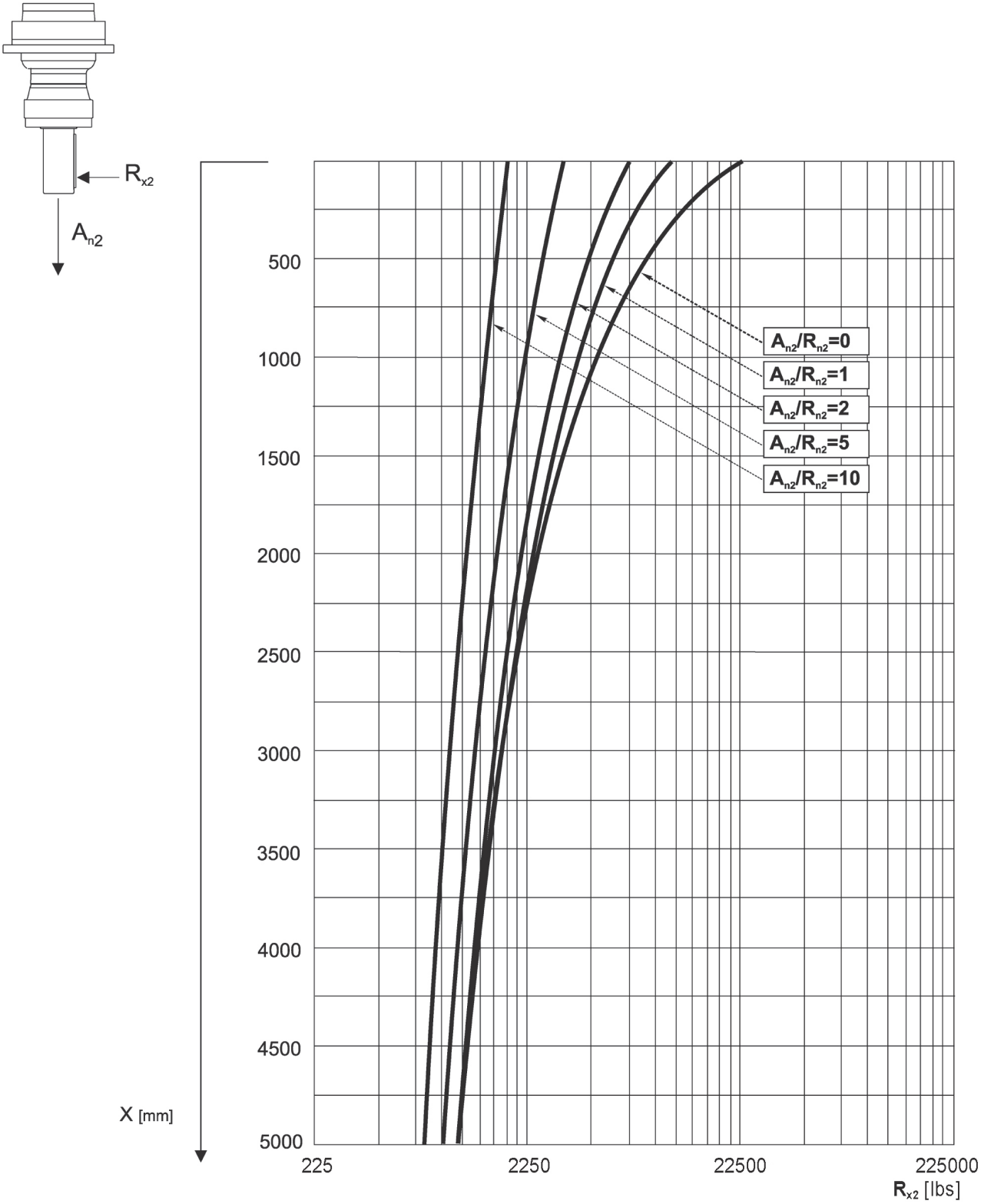

309 L

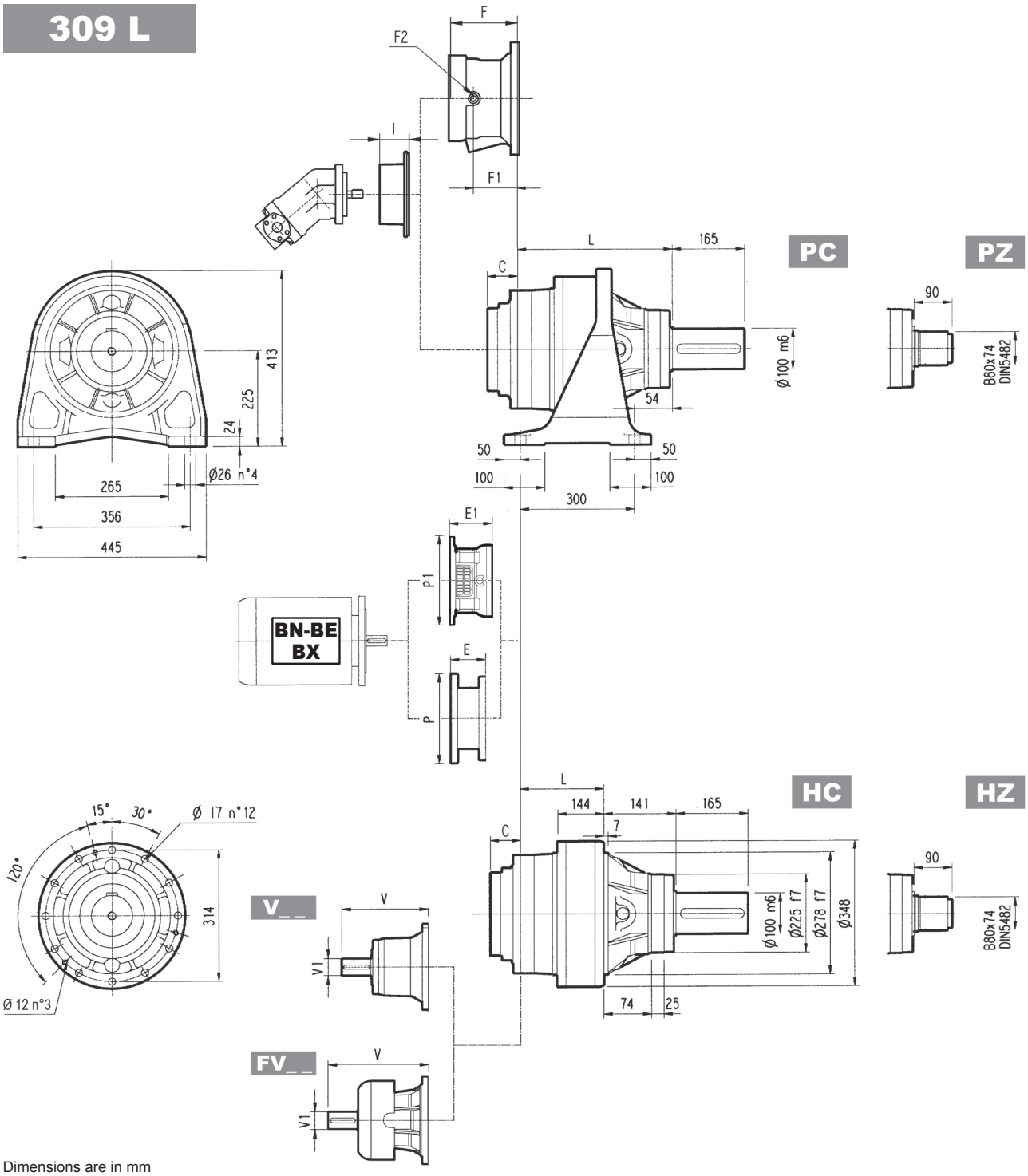

Metric

Dimensions are in mm

	L				Kg			
	PC - PZ	HC - HZ	FZ	FP - FDK	PC - PZ	HC - HZ	FZ	FP - FDK
309 L1	267	126	99	101	130	115	95	100
309 L2	356	215	188	190	142	127	107	112
309 L3	421	280	253	255	149	134	114	119
309 L4	474	333	306	308	153	138	118	123

	V	V1	Kg	V	V1	Kg	V	V1	Kg	V	V1	Kg	C	Input	I	F	F1	F2	Type	Input	Kg
309 L1	315	80	35	313	60	28	375	80	48	363	60	34	51	B	532	201	153	1/4 G	6	B	28
309 L2	239	48	15	—	—	—	276	48	17	—	—	—	37	A		145	95	1/4 G	5	A	16
309 L3	137.5	24	6	158	38	7	—	—	—	—	—	—	37	A		105	65	1/4 G	4	A	10
309 L4	137.5	24	6	158	38	7	—	—	—	—	—	—	37	A		105	65	1/4 G	4	A	10

309 L

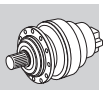

Metric

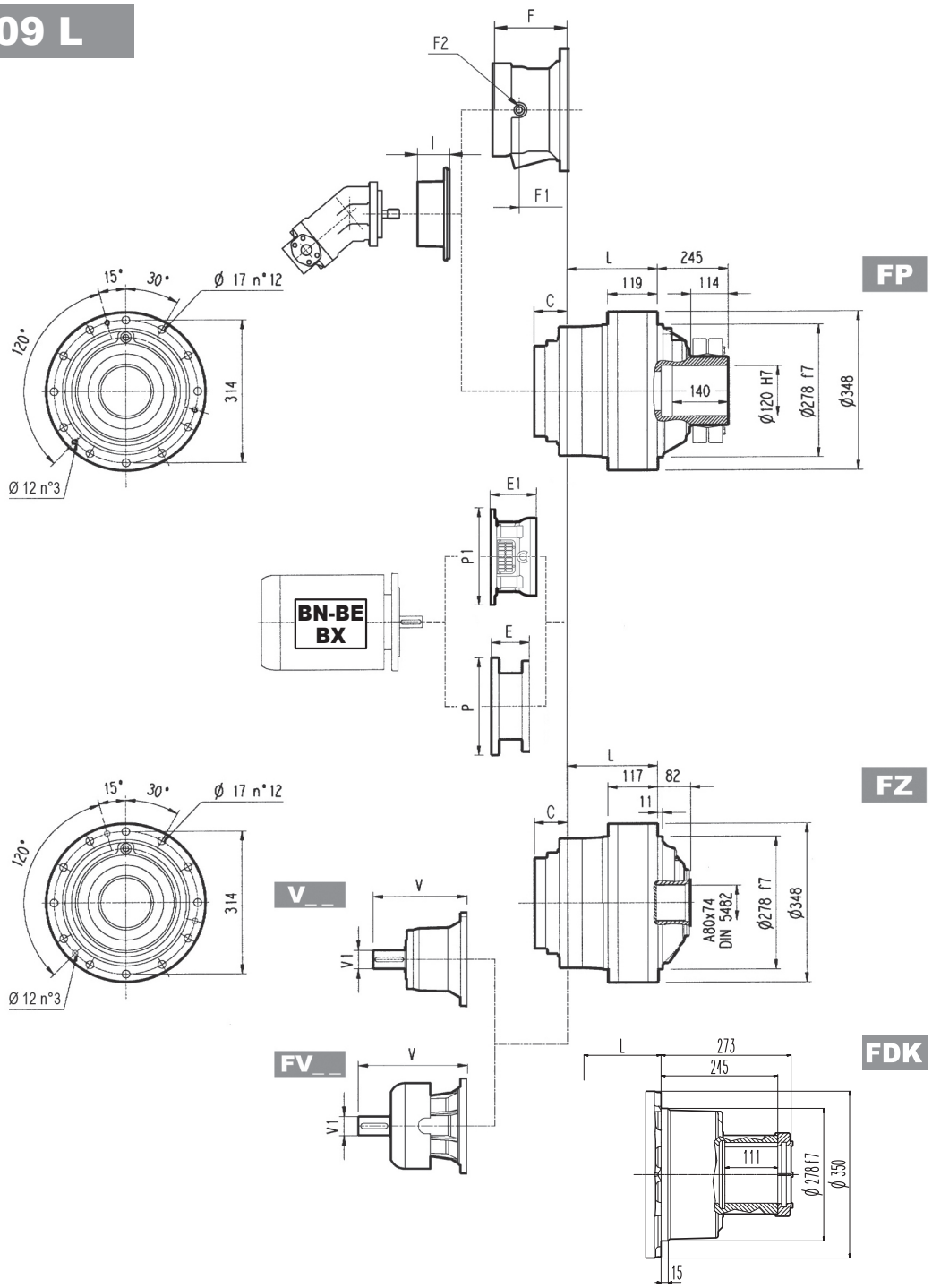

	PF 160		PF 180		PF 200		PF225		PF 250	
	E1	P1	E1	P1	E1	P1	E1	P1	E1	P1
309 L1*	—	—	—	—	197	530	227	530	227	550
309 L2	165	400	165	400	195	400	195	450	—	—
309 L3	165	400	165	400	—	—	—	—	—	—
309 L4	165	400	165	400	—	—	—	—	—	—

(*): for PC-PZ versions contact Bonfiglioli Technical Service
NOTE: For R design contact Bonfiglioli Technical Service

FP	**T_{2max} = 256,670 lb·in**

Dimensions are in mm

	P71		P80		P90		P100		P112		P132		P160		P180		P200		P225		P250	
	E	P	E	P	E	P	E	P	E	P	E	P	E	P	E	P	E	P	E	P	E	P
309 L1	—	—	—	—	—	—	—	—	—	—	—	—	—	—	195	350	186	400	216	450	216	550
309 L2	—	—	—	—	—	—	—	—	—	—	114	300	144	350	144	350	174	400	—	—	—	—
309 L3	65	160	84	200	84	200	94	250	94	250	114	300	144	350	—	—	—	—	—	—	—	—
309 L4	65	160	84	200	84	200	94	250	94	250	114	300	144	350	—	—	—	—	—	—	—	—

Bonfiglioli Riduttori

309 R

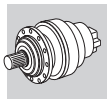

Metric

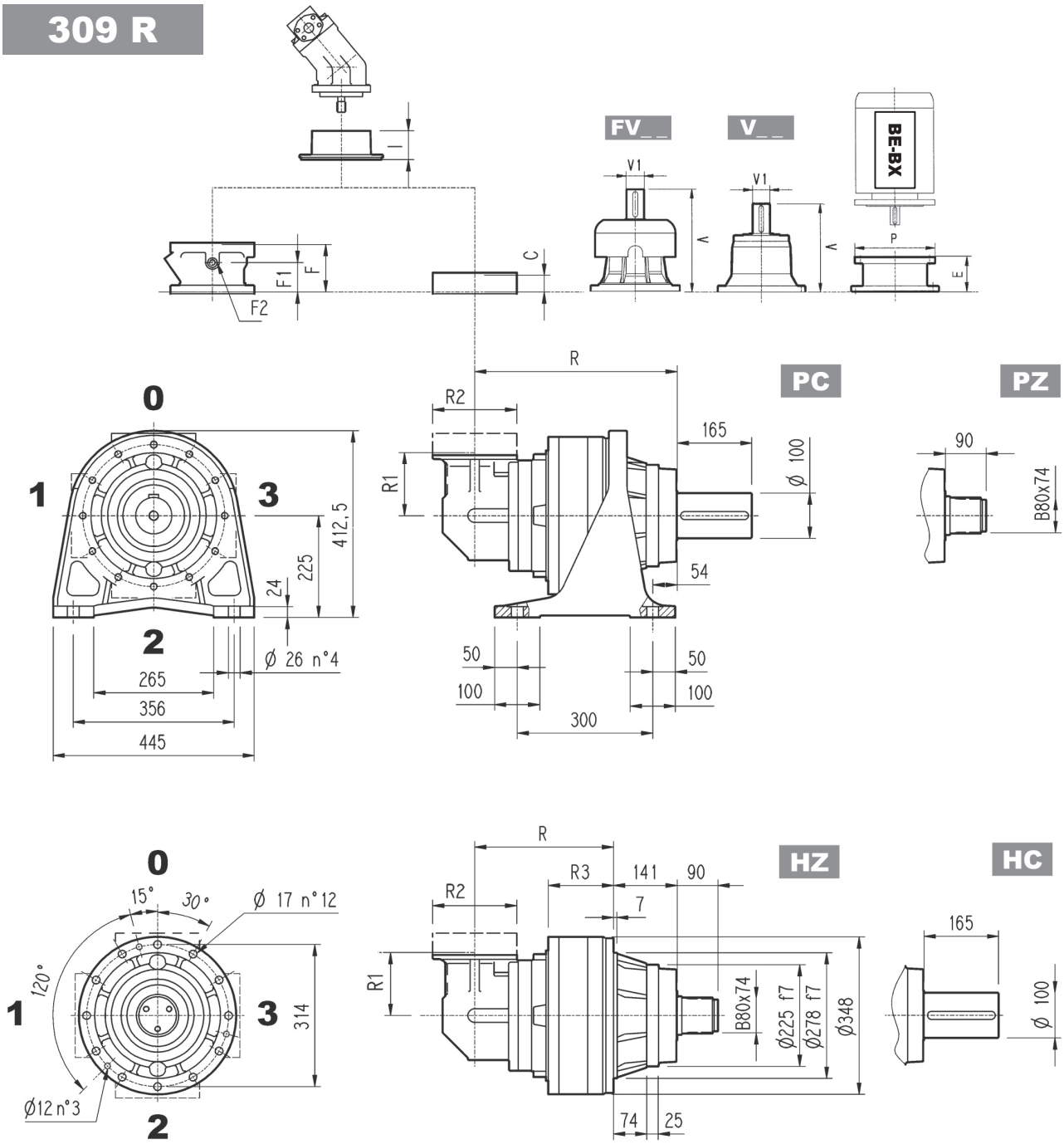

Dimensions are in mm

	R				R1	R2	R3			Kg			
	PC-PZ	HC-HZ	FZ	FP - FDK			HC-HZ	FZ	FP	PC-PZ	HC-HZ	FZ	FP - FDK
309 R2	386	245	218	220	225	245	168	141	143	180	165	145	150
309 R3	448	307	280	282	140	186	144	117	119	162	147	127	132
309 R4	513	372	345	347	122	186	144	117	119	163	148	128	133

	V	V1	Kg	V	V1	Kg	V	V1	Kg	C	Input	I	F	F1	F2	Type	Input	Kg
309 R2	239	48	15	—	—	—	276	48	17	37	A		145	95	1/4 G	5	A	16
309 R3	137.5	24	6	158	38	7	—	—	—	37	A		105	65	1/4 G	4	A	10
309 R4	137.5	24	6	158	38	7	—	—	—	37	A	532	105	65	1/4 G	4	A	10

309 R

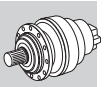

Metric

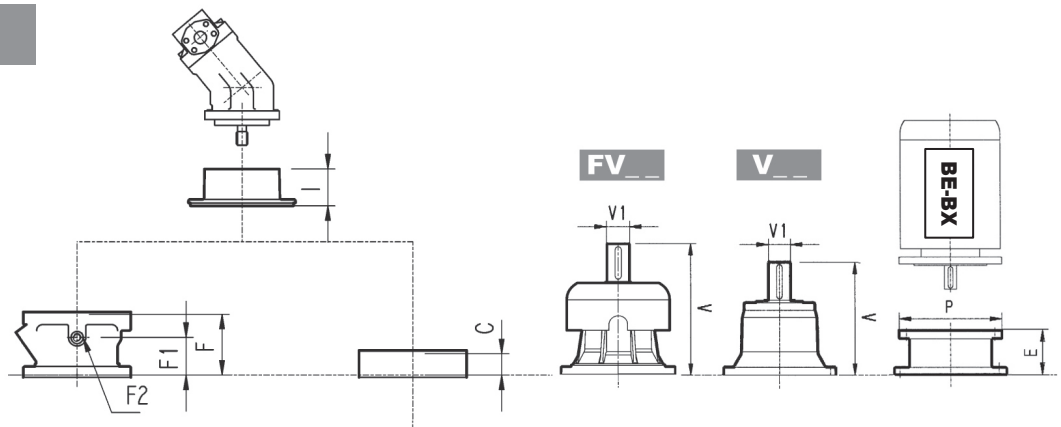

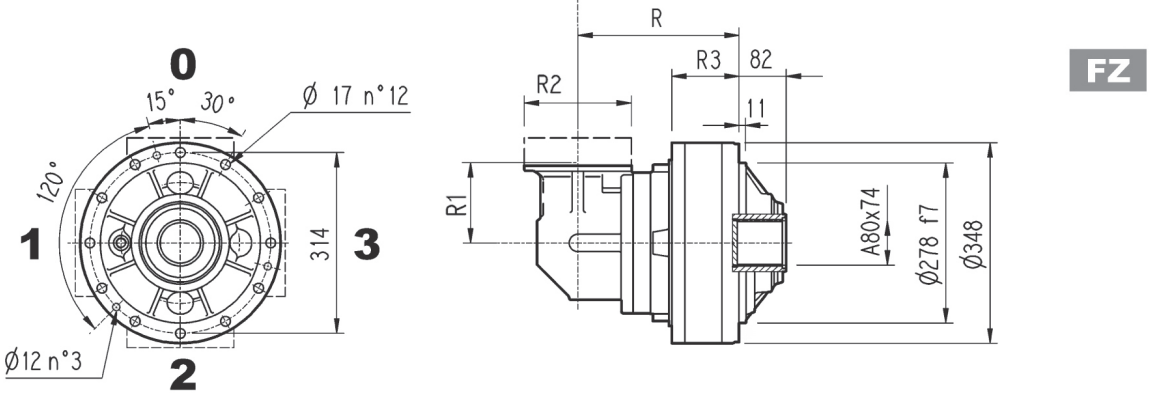

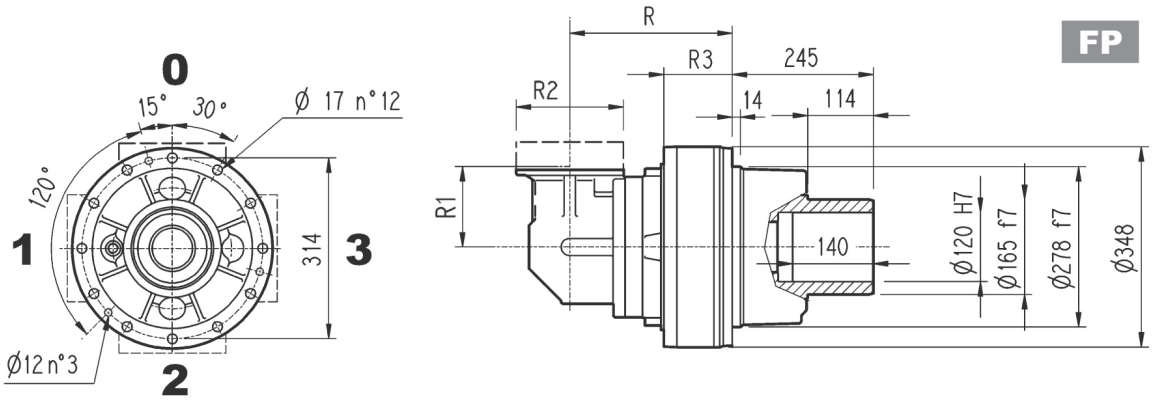

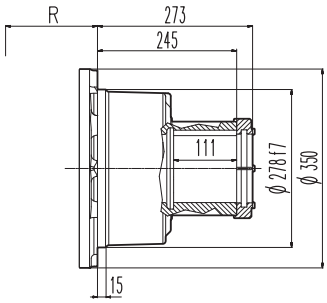

FP	T_{2max} = 256,670 lb·in

Dimensions are in mm

	P71		P80		P90		P100		P112		P132		P160		P180		P200	
	E	P	E	P	E	P	E	P	E	P	E	P	E	P	E	P	E	P
309 R2	—	—	—	—	—	—	—	—	—	—	114	300	144	350	144	350	174	400
309 R3	65	160	84	200	84	200	94	250	94	250	114	300	144	350	—	—	—	—
309 R4	65	160	84	200	84	200	94	250	94	250	114	300	144	350	—	—	—	—

309 L

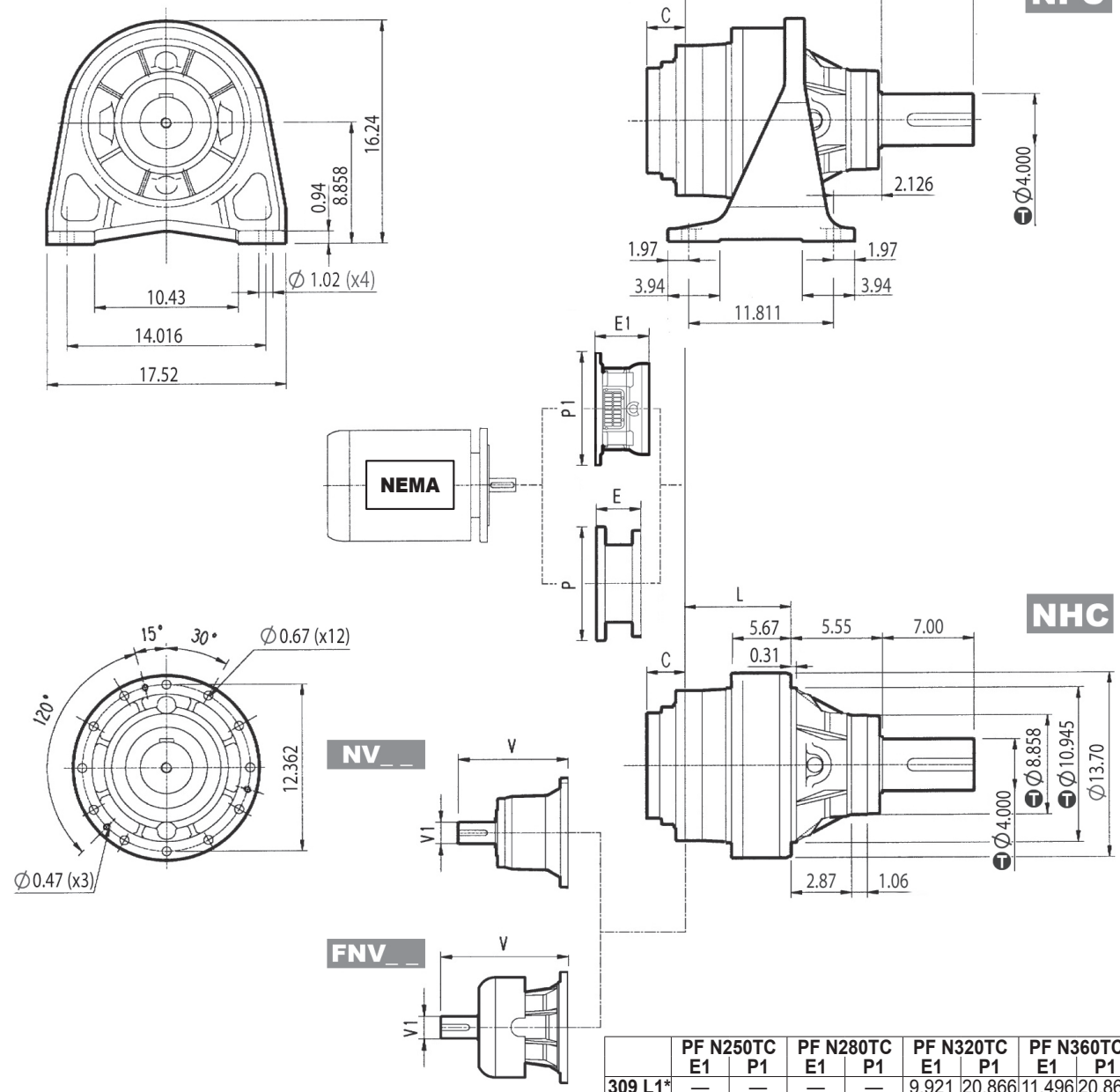

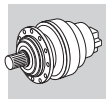

Imperial

inch	T
10.945	-0.00220 -0.00425
8.858	-0.00197 -0.00378
4.000	+0.00138 -0.00051

	PF N250TC		PF N280TC		PF N320TC		PF N360TC	
	E1	P1	E1	P1	E1	P1	E1	P1
309 L1*	—	—	—	—	9.921	20.866	11.496	20.866
309 L2	8.661	15.748	8.661	15.748	9.843	15.748	10.236	17.717
309 L3	8.661	15.748	8.661	15.748	—	—	—	—
309 L4	8.661	15.748	8.661	15.748	—	—	—	—

(*): for NPC versions contact Bonfiglioli Technical Service
NOTE: for R design contact Bonfiglioli Technical Service
for PF N400TC contact Bonfiglioli Technical Service

Dimensions are in Inch except when shown in *italic [mm]*

	L		lbs	
	NPC	NHC	NPC	NHC
309 L1	10.51	4.96	286.7	253.6
309 L2	14.02	8.46	313.1	280.0
309 L3	16.57	11.02	328.5	295.5
309 L4	18.66	13.11	337.4	304.3

	V	V1	lbs	V	V1	lbs	V	V1	lbs	V	V1	lbs	C	Input
309 L1	12.283	3.000	77.2	13.130	2.375	29.8	14.646	3.000	90.0	15.104	2.375	38.0	1.772	B
309 L2	9.681	1.875	33.1	—	—	—	11.138	1.875	38.0	—	—	—	1.457	A
309 L3	5.996	1.125	13.2	6.437	1.625	15.4	—	—	—	—	—	—	1.457	A
309 L4	5.996	1.125	13.2	6.437	1.625	15.4	—	—	—	—	—	—	1.457	A

	N56C		N140TC		N180TC		N210TC		N250TC		N280TC		N320TC		N360TC	
	E	P	E	P	E	P	E	P	E	P	E	P	E	P	E	P
309 L1	—	—	—	—	—	—	—	—	—	—	—	—	8.64	15.75	8.64	15.75
309 L2	—	—	—	—	—	—	—	—	5.41	11.81	6.42	13.78	—	—	—	—
309 L3	4.51	6.70	4.51	6.70	5.37	8.82	5.37	8.82	5.37	8.82	6.32	11.81	—	—	—	—
309 L4	4.51	6.70	4.51	6.70	5.37	8.82	5.37	8.82	5.37	8.82	6.32	11.81	—	—	—	—

309 R

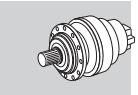

Imperial

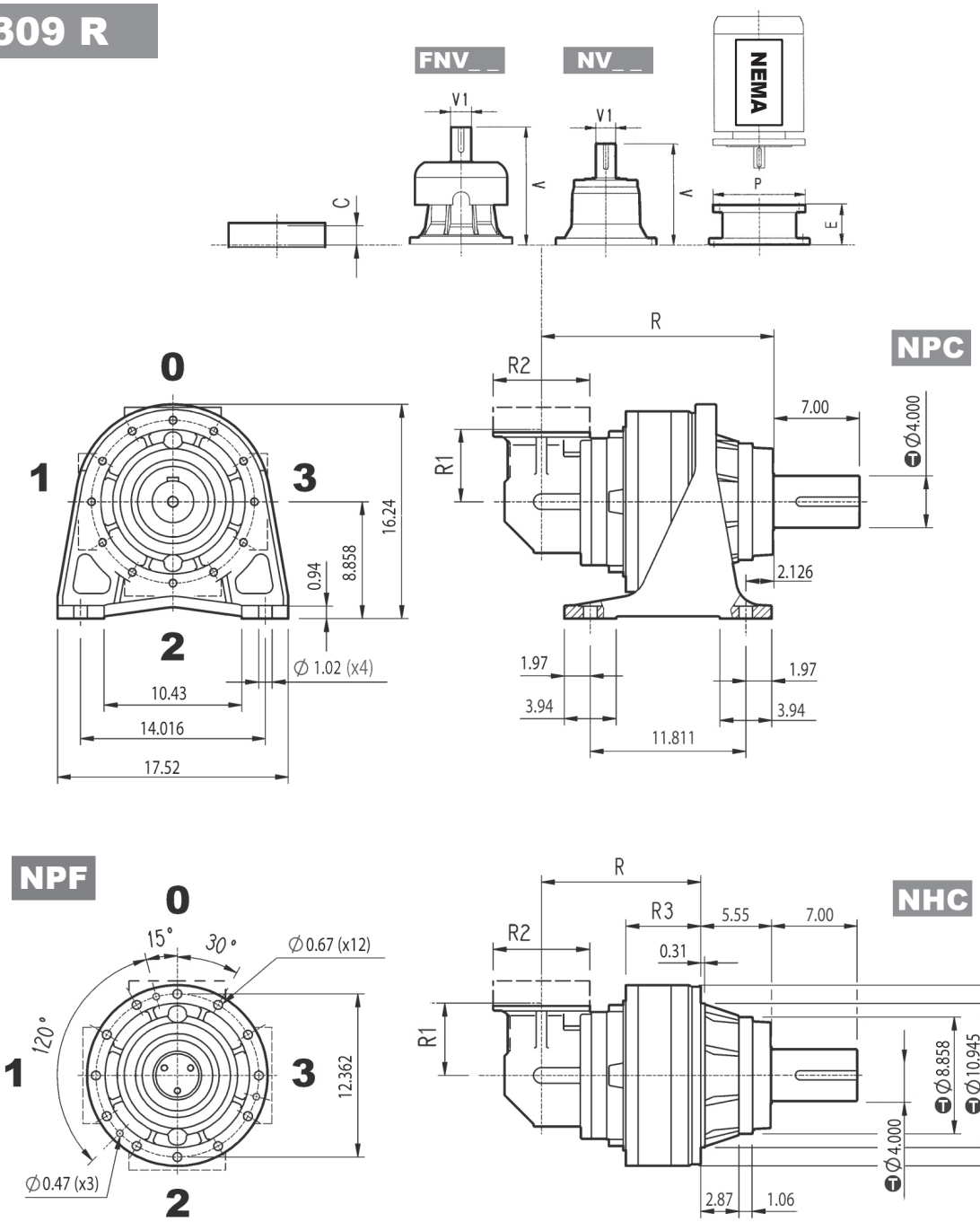

inch	Ⓣ
10.945	-0.00220 -0.00425
8.858	-0.00197 -0.00378
4.000	+0.00138 -0.00051

Dimensions are in Inch except when shown in *italic [mm]*

	R		R1	R2	R3	lbs	
	NPC	NHC			NHC	NPC	NHC
309 R2	15.20	9.65	8.86	9.65	6.61	396.9	363.8
309 R3	17.64	12.09	5.51	7.32	5.57	357.2	324.1
309 R4	20.20	14.65	4.80	7.32	5.57	359.4	326.3

	V	V1	lbs	V	V1	lbs	V	V1	lbs	C	Input
309 R2	9.681	1.875	33.1	—	—	—	11.138	1.875	38.0	1.457	A
309 R3	5.996	1.125	13.2	6.437	1.625	15.4	—	—	—	1.457	A
309 R4	5.996	1.125	13.2	6.437	1.625	15.4	—	—	—	1.457	A

	N56C		N140TC		N180TC		N210TC		N250TC		N280TC	
	E	P	E	P	E	P	E	P	E	P	E	P
309 R2	—	—	—	—	—	—	—	—	—	—	—	—
309 R3	—	—	—	—	—	—	—	—	5.41	11.81	6.42	13.78
309 R4	4.51	6.70	4.51	6.70	5.37	8.82	5.37	8.82	5.37	8.82	6.32	11.81

Bonfiglioli Riduttori

3/V 09 L3

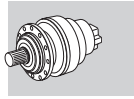

Metric

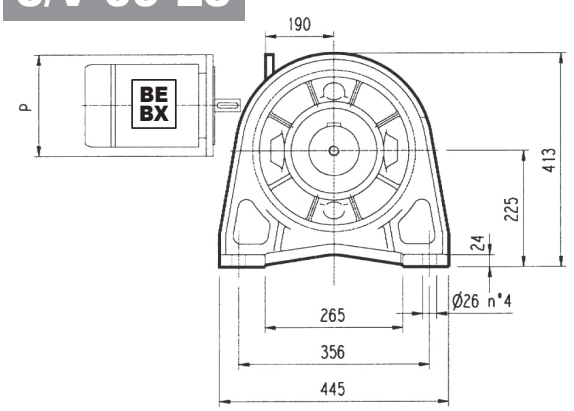

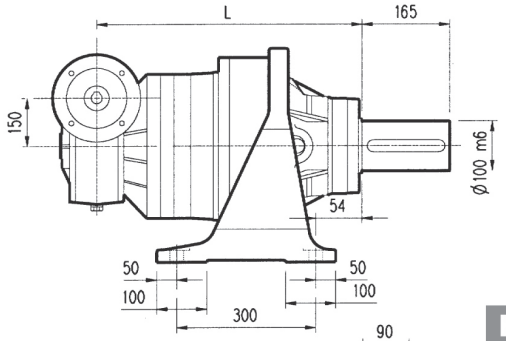

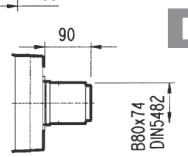

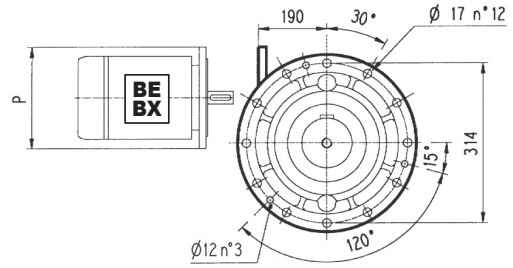

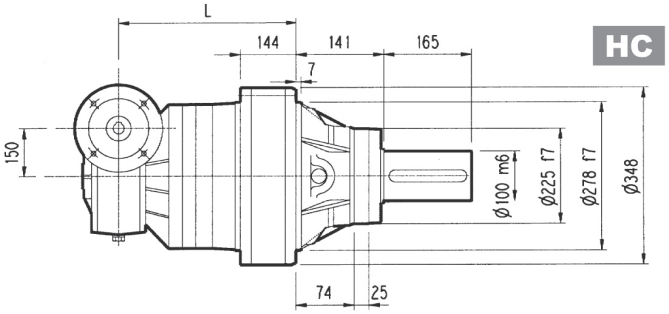

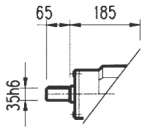

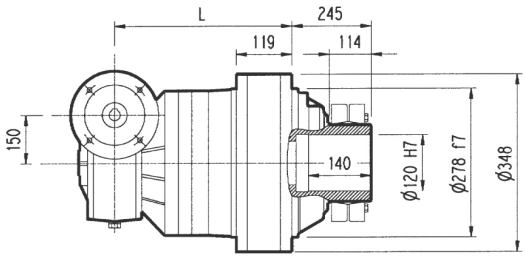

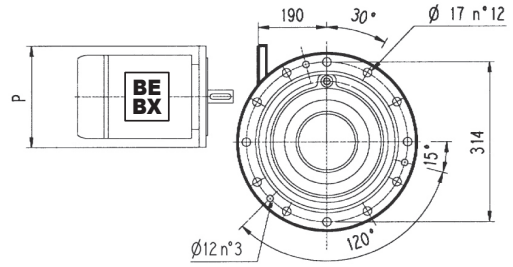

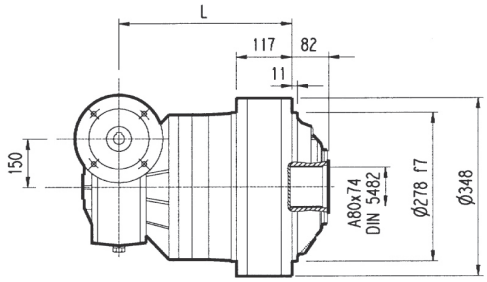

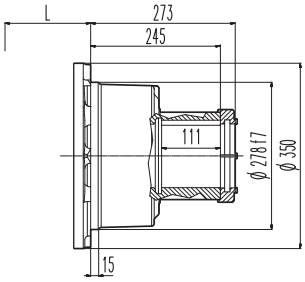

FP	T_{2max} = 256,670 lb·in

Dimensions are in mm

	L				Kg				P100	P112	P132	P160
	PC - PZ	HC - HZ	FZ	FP - FDK	PC - PZ	HC - HZ	FZ	FP - FDK	P	P	P	P
3/V 09 L3	530	389	362	364	202	187	167	172	250	250	300	350

3/V 09 L3

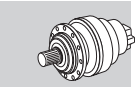

Imperial

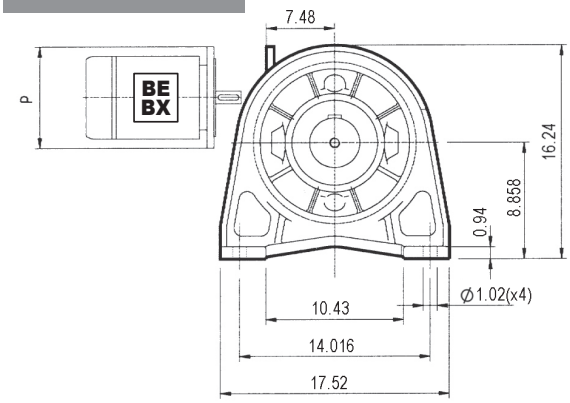

NPC

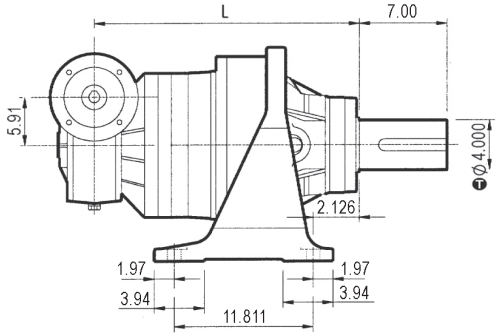

NHC

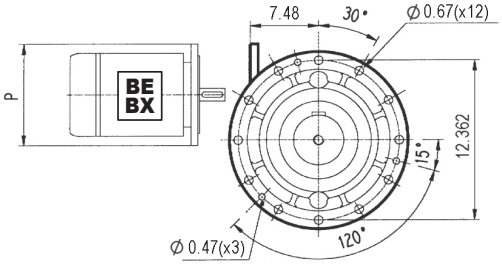

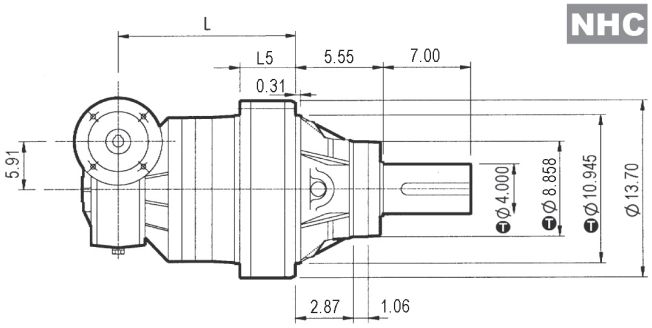

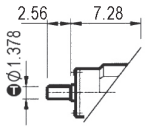

inch	T
10.945	-0.00220 -0.00425
8.858	-0.00197 -0.00378
4.000	+0.00138 -0.00051
1.378	0 -0.00063

Dimensions are in Inch except when shown in *italic [mm]*

	L		lbs		P100	P112	P132	P160
	NPC	NHC	NPC	NHC	P	P	P	P
3/V 09 L3	20.87	15.31	445.4	412.3	9.84	9.84	11.81	13.78

Bonfiglioli Riduttori

309 L | 309 R | 3/V 09 L3

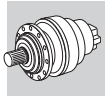

Metric

Imperial

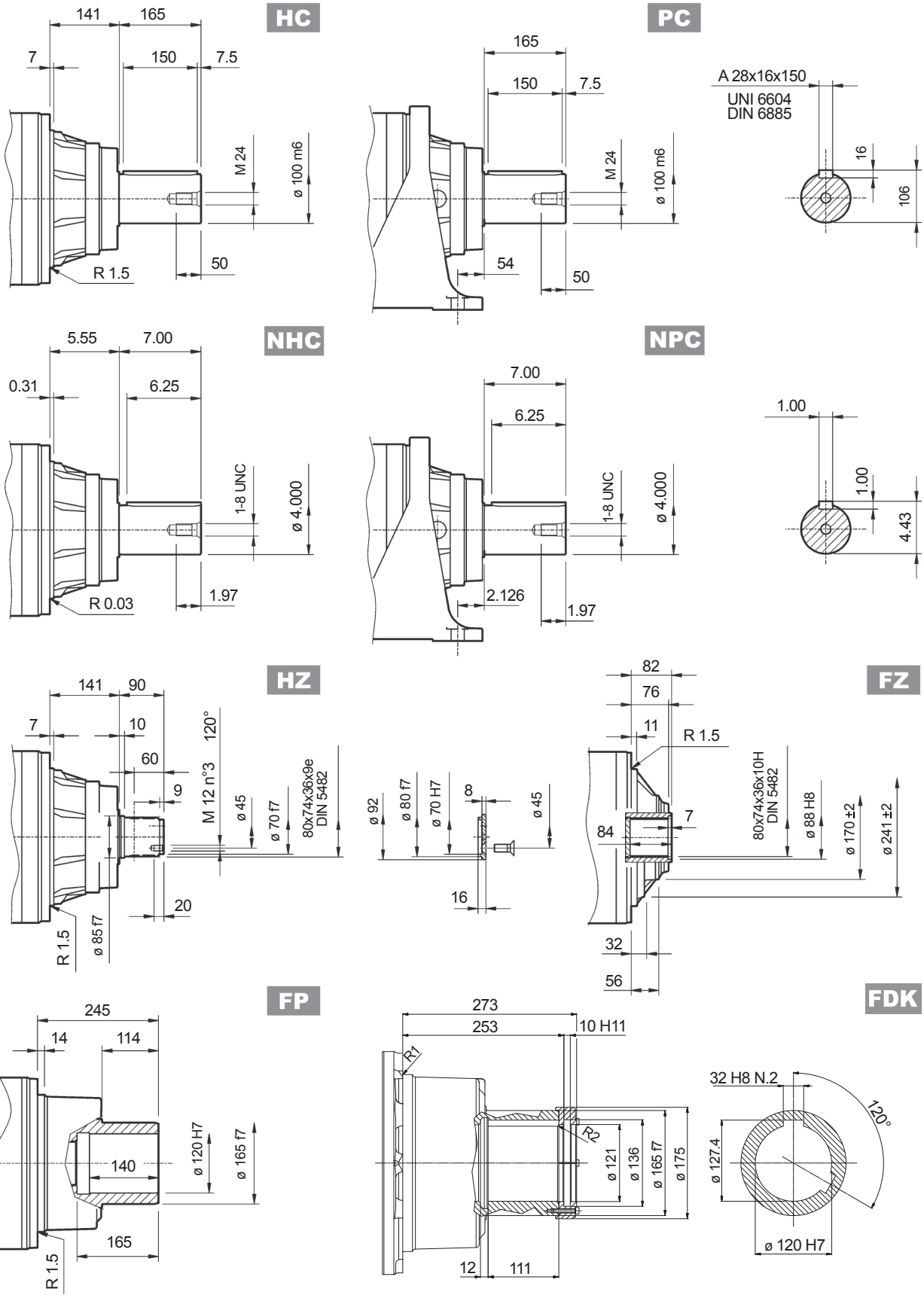

FP	T_{2max} = 256,670 lb·in

Dimensions are in mm when shown in italic, otherwise dimensions are in inches

inch	T
4.000	+0.00138 -0.00051

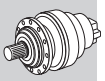

Flange

W0A

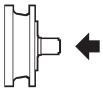

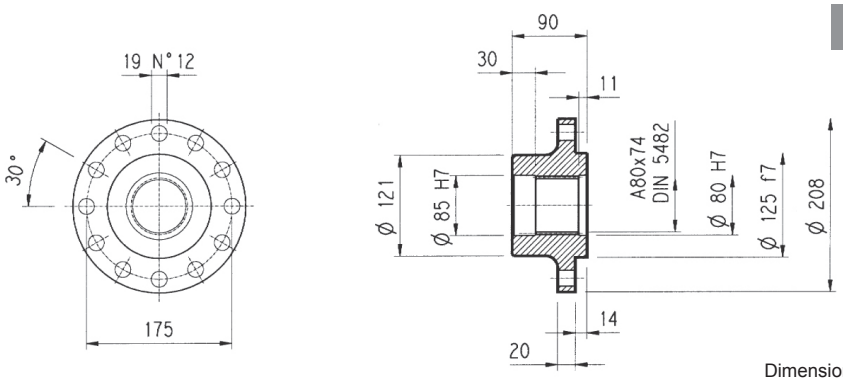

Material: Steel C40

Dimensions are in mm

Pinions

P...

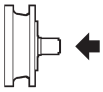

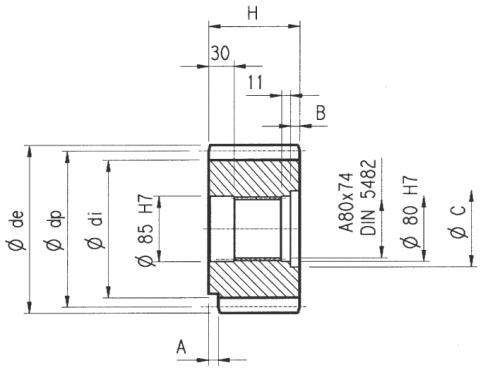

Dimensions are in mm

α = 20°

	m	z	x	dp	di	de	H	A	B	C	Material
PFG	8	16	0.500	128	117	149.5	90	—	—	—	Steel 39NiCrMo3 hardened and tempered
PHC	10	12	0.450	120	104	145	90	—	—	—	
PHE	10	14	0.320	140	121	165	116	13	26	95	
PHF	10	15	0.150	150	130	171.5	107	20	17	100	
PHG	10	16	0.500	160	145	186	90	—	—	—	Steel 18NiCrMo5 case hardened
PHH1	10	17	—	170	145	189	90	—	—	—	
PHH2	10	17	0.500	170	154	198	90	—	—	—	
PLD	12	13	0.500	156	138	192	102	—	12	95	Steel 39NiCrMo3 hardened and tempered
PLE	12	14	0.500	168	150	199.2	90	—	—	—	
PLI	12	18	0.500	216	198	249.6	107	7	17	95	
PLT	12	26	—	312	282	336	90	10	—	—	Steel 18NiCrMo5 case hardened

Sleeve coupling

M0A

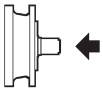

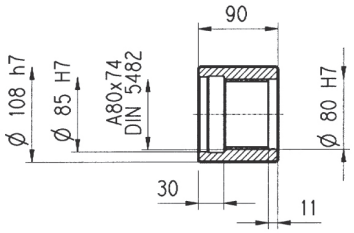

Material: Steel 16CrNi4

Dimensions are in mm

Splined bars

B0A

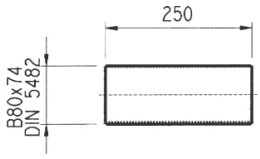

Material: Case hardening steel 18NiCrMo5 UNI 5331
must be case hardened 50-55 HRC

Shrink disc

G0A

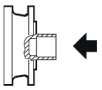

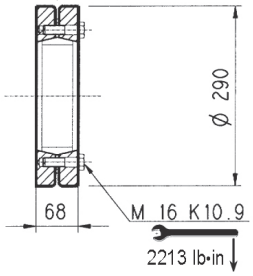

Dimensions are in mm

309 L 309 R

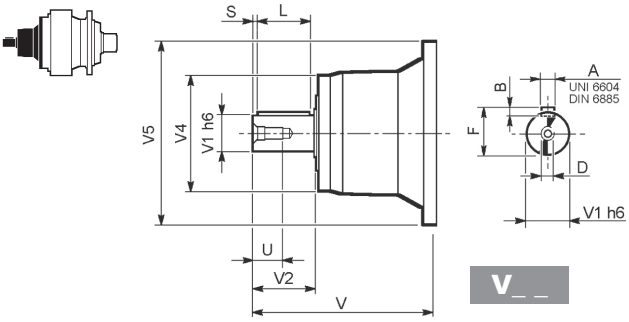

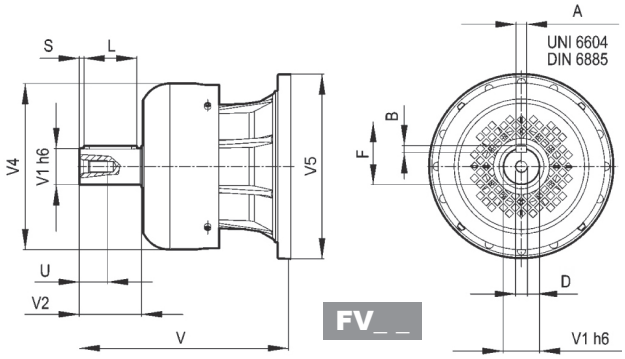

Dimensions are in mm

		V	V1	V2	V4	V5	A	B	F	L	S	D	U
309 L1	**V07B**	315	80	130	200	345	22	14	85	110	10	M16	36
	FV07B	375	80	130	347.5	348	22	14	85	110	10	M16	36
	V07A	313	60	105	155	345	18	11	64	90	7.5	M16	36
	FV07A	363	60	105	309	348	18	11	64	90	7.5	M16	36
309 L2	**V05B**	239	48	82	155	245	14	9	51.5	70	6	M16	36
	FV05B	276	48	82	219.5	244	14	9	51.5	70	6	M16	36
309 L3	**V01A**	137.5	24	36	120	186	8	7	27	30	3	M8	19
	V01B	158	38	58	120	186	10	8	41	50	4	M12	28
309 L4	**V01A**	137.5	24	36	120	186	8	7	27	30	3	M8	19
	V01B	158	38	58	120	186	10	8	41	50	4	M12	28
309 R2	**V05B**	239	48	82	155	245	14	9	51.5	70	6	M16	36
	FV05B	276	48	82	219.5	244	14	9	51.5	70	6	M16	36
309 R3-R4	**V01A**	137.5	24	36	120	186	8	7	27	30	3	M8	19
	V01B	158	38	58	120	186	10	8	41	50	4	M12	28

309 L 309 R

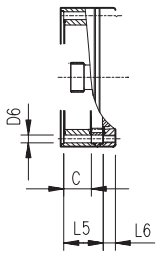

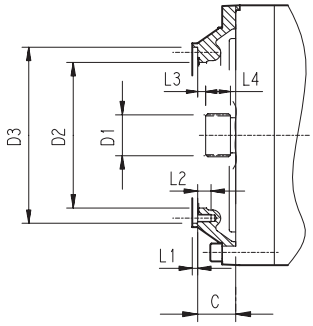

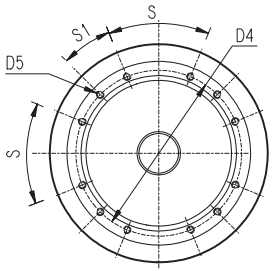

Dimensions are in mm

		C	D1	D2	D3	D4	D5	D6	L1	L2	L3	L4	L5	L6	S	S1	Input
309 L1	**V9AB**	51	58x53 DIN 5482	195	236 H7	222	M10 n°12	—	4	18	11	22	—	—	45°	22.5°	B
309 L2	**V9AA**	37	40x36 DIN 5482	140	178 H7	165	M10 n°8	—	4	18	9	18	—	—	45°	45°	A
309 L3	**V9AA**	37	40x36 DIN 5482	140	178 H7	165	M10 n°8	11	4	—	9	18	65	18	45°	45°	A
309 L4	**V9AA**	37	40x36 DIN 5482	140	178 H7	165	M10 n°8	11	4	—	9	18	118	18	45°	45°	A
309 R2	**V9AA**	37	40x36 DIN 5482	140	178 H7	165	M10 n°8	11	4	18	9	18	—	—	45°	45°	A
309 R3-R4	**V9AA**	37	40x36 DIN 5482	140	178 H7	165	M10 n°8	11	4	—	9	18	37	18	45°	45°	A

3/V 09 L3

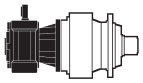

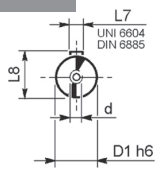

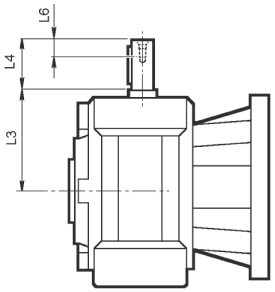

Dimensions are in mm

	D1 h6	L3	L4	L6	L7	L8	d
3/V 09 L3_HS	35	185	65	20	10	38	M8

309 L 309 R

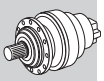

inch	Ⓣ
3.000	0 -0.00075
2.375	0 -0.00053
1.875	0 -0.00053
1.625	0 -0.00053
1.125	0 -0.00051

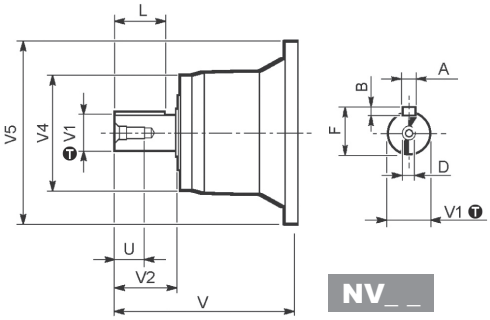

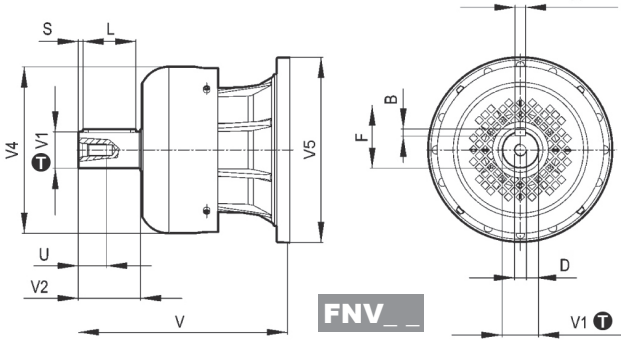

Dimensions are in Inch except when shown in *italic [mm]*

		V	V1	V2	V4	V5	A	B	F	L	D	U
309 L1	**NV07B**	12.283	3.000	5.000	7.165	13.699	0.750	0.750	3.328	4.374	3/4 -10 UNC	1.654
	FNV07B	14.646	3.000	5.000	13.677	13.699	0.750	0.750	3.328	4.374	3/4 -10 UNC	1.654
	NV07A	13.130	2.375	4.750	6.024	13.700	0.625	0.625	2.645	4.250	3/4 -10 UNC	1.654
	FNV07A	15.104	2.375	4.750	6.811	13.700	0.625	0.625	2.645	4.250	3/4 -10 UNC	1.654
309 L2	**NV05B**	9.681	1.875	3.500	6.417	9.606	0.500	0.500	2.091	3.000	5/8-11 UNC	1.417
	FNV05B	11.138	1.875	3.500	8.641	9.606	0.500	0.500	2.091	3.000	5/8-11 UNC	1.417
309 L3	**NV01A**	5.996	1.125	2.000	4.980	7.323	0.250	0.250	1.236	1.752	3/8-16 UNC	0.866
	NV01B	6.437	1.625	2.500	4.980	7.323	0.375	0.375	1.791	2.000	1/2-13 UNC	1.102
309 L4	**NV01A**	5.996	1.125	2.000	4.980	7.323	0.250	0.250	1.236	1.752	3/8-16 UNC	0.866
	NV01B	6.437	1.625	2.500	4.980	7.323	0.375	0.375	1.791	2.000	1/2-13 UNC	1.102
309 R2	**NV05B**	9.681	1.875	3.500	6.417	9.606	0.500	0.500	2.091	3.000	5/8-11 UNC	1.417
	FNV05B	11.138	1.875	3.500	8.641	9.606	0.500	0.500	2.091	3.000	5/8-11 UNC	1.417
309 R3-R4	**NV01A**	5.996	1.125	2.000	4.980	7.323	0.250	0.250	1.236	1.752	3/8-16 UNC	0.866
	NV01B	6.437	1.625	2.500	4.980	7.323	0.375	0.375	1.791	2.000	1/2-13 UNC	1.102

309 L 309 R

inch	Ⓣ
9.29	+0.00181 0
7.01	+0.00157 0

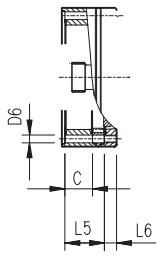

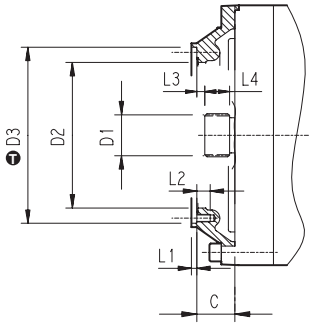

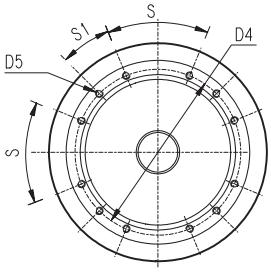

Dimensions are in Inch except when shown in *italic [mm]*

		C	D1	D2	D3	D4	D5	D6	L1	L2	L3	L4	L5	L6	S	S1	Input
309 L1	**V9AB**	1.77	*58x53 DIN5482*	7.68	9.29	8.74	*M10 n°12*	—	0.16	0.71	0.43	0.87	—	—	45°	22.5°	B
309 L2	**V9AA**	1.46	*40x36 DIN5482*	5.51	7.01	6.50	*M10 n°8*	—	0.16	0.71	0.35	0.71	—	—	45°	45°	A
309 L3	**V9AA**	1.46	*40x36 DIN5482*	5.51	7.01	6.50	*M10 n°8*	0.43	0.16	—	0.35	0.71	4.65	0.71	45°	45°	A
309 L4	**V9AA**	1.46	*40x36 DIN5482*	5.51	7.01	6.50	*M10 n°8*	0.43	0.16	—	0.35	0.71	6.73	0.71	45°	45°	A
309 R2	**V9AA**	1.46	*40x36 DIN5482*	5.51	7.01	6.50	*M10 n°8*	—	0.16	0.71	0.35	0.71	—	—	45°	45°	A
309 R3-R4	**V9AA**	1.46	*40x36 DIN5482*	5.51	7.01	6.50	*M10 n°8*	0.43	0.16	—	0.35	0.71	1.46	0.71	45°	45°	A

3/V 09 L3

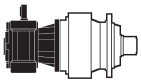

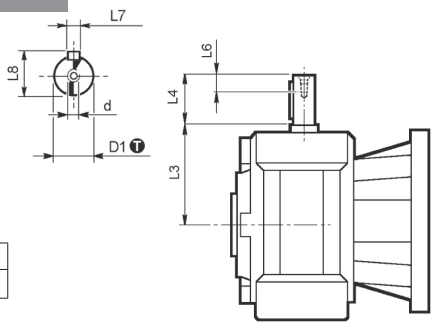

inch	Ⓣ
1.378	0 -0.00063

Dimensions are in Inch except when shown in *italic [mm]*

	D1	L3	L4	L6	L7	L8	d
3/V 09 L3_HS	1.378	7.28	2.56	0.787	0.394	1.496	*M8*

Permissible radial and axial loads on output shaft with $Fh_2 : n_2 \cdot h = 100000$

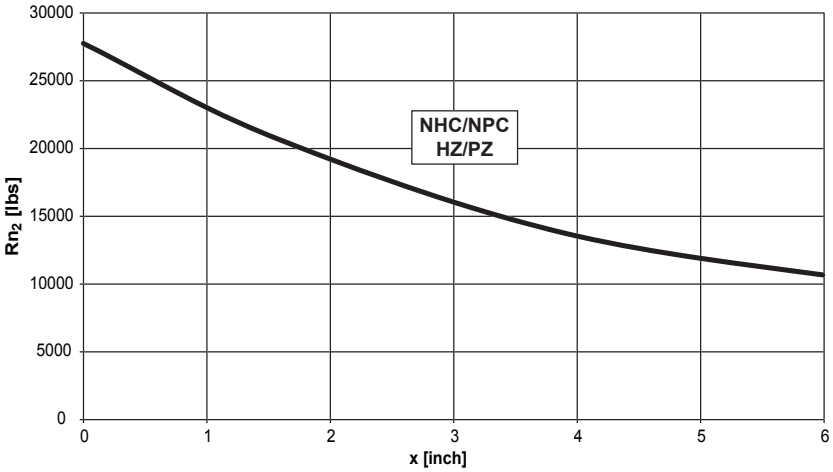

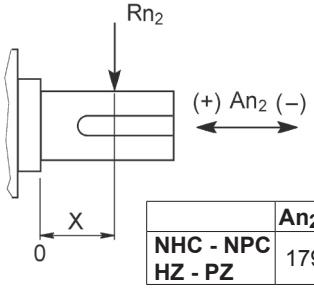

	An2 (+)	An2 (-)
NHC - NPC HZ - PZ	17984	8992

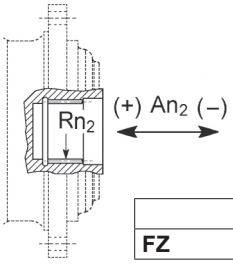

	Rn2	An2 (+/-)
FZ	3756	3861

Load corrective factor fh_2 on shafts	$Fh_2 = n_2 \cdot h$		10000	25000	50000	100000	500000	1000000
	fh_2	FZ	**2.15**	**1.59**	**1.26**	**1.00**	**0.58**	**0.46**
		NHC - NPC - HZ -PZ	**1.49**	**1.49**	**1.23**	**1.00**	**0.62**	**0.50**

Permissible radial loads on input shaft with $Fh_1 : n_1 \cdot h = 250000$

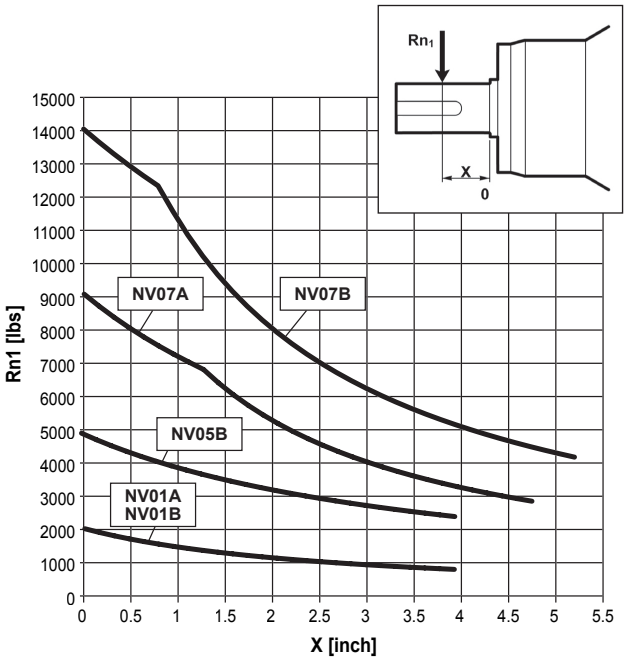

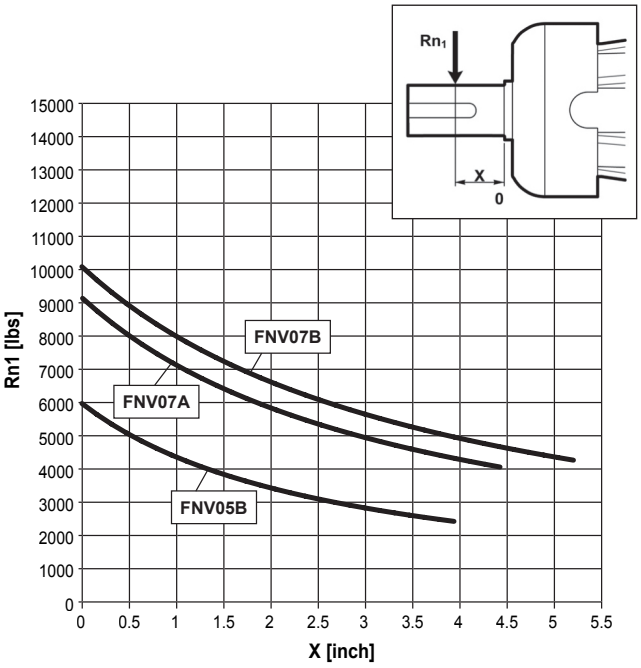

Load corrective factor fh_1 on shafts	$Fh_1 = n_1 \cdot h$	250000	500000	1000000	2000000	5000000	10000000
	fh_1	**1**	**0.79**	**0.63**	**0.50**	**0.37**	**0.29**

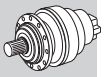

309 VK

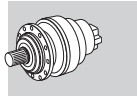

Metric

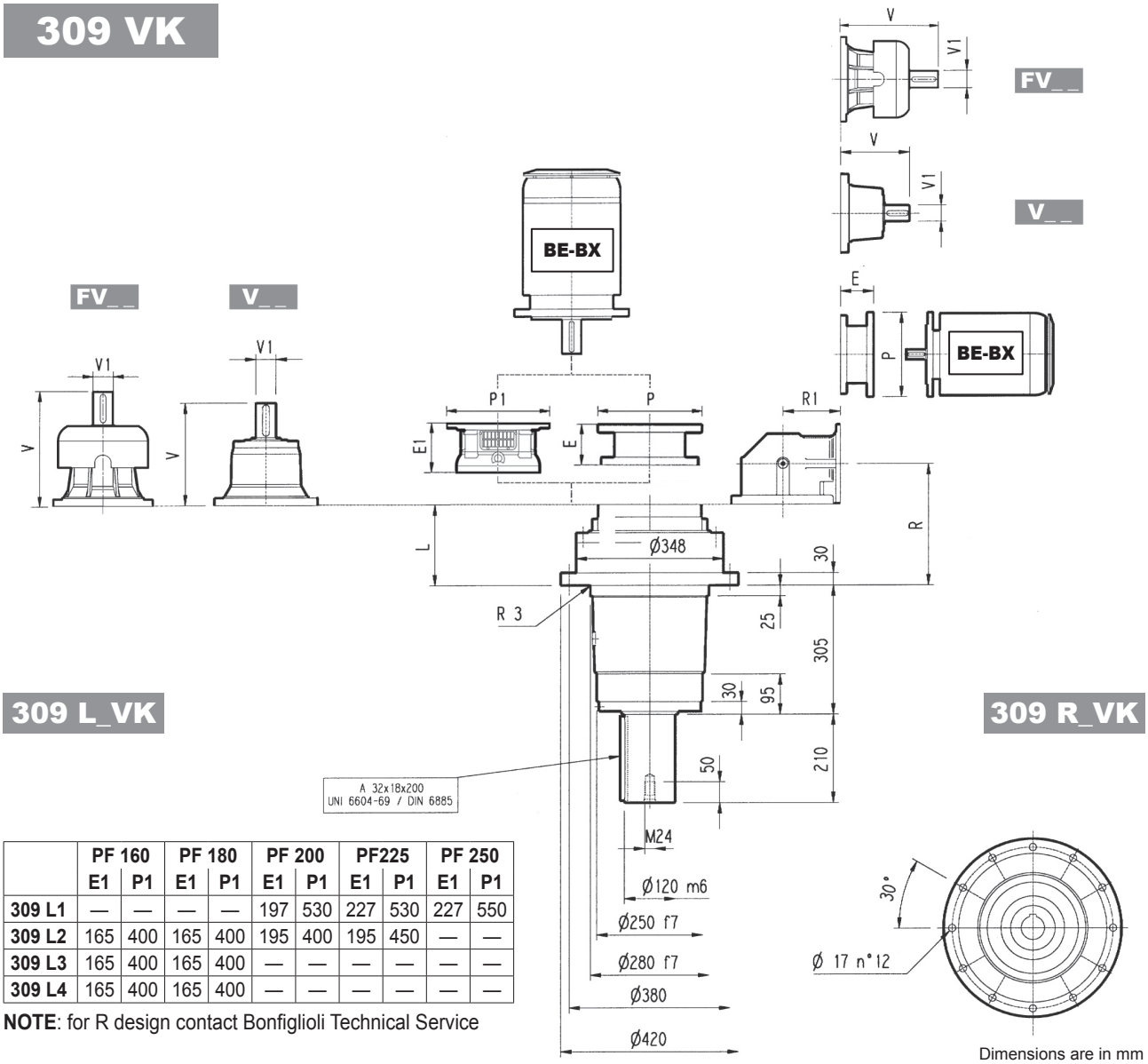

309 L_VK

309 R_VK

	PF 160		PF 180		PF 200		PF225		PF 250	
	E1	P1	E1	P1	E1	P1	E1	P1	E1	P1
309 L1	—	—	—	—	197	530	227	530	227	550
309 L2	165	400	165	400	195	400	195	450	—	—
309 L3	165	400	165	400	—	—	—	—	—	—
309 L4	165	400	165	400	—	—	—	—	—	—

NOTE: for R design contact Bonfiglioli Technical Service

Dimensions are in mm

	L	Kg	V	V1	Kg	V	V1	Kg	V	V1	Kg	V	V1	Kg
309 L1	102	165	315	80	35	313	60	28	375	80	48	363	60	34
309 L2	191	180	239	48	15	—	—	—	276	48	17	—	—	—
309 L3	256	190	137.5	24	6	158	38	7	—	—	—	—	—	—
309 L4	309	195	137.5	24	6	158	38	7	—	—	—	—	—	—

	P71		P80		P90		P100		P112		P132		P160		P180		P200		P225		P250	
	E	P	E	P	E	P	E	P	E	P	E	P	E	P	E	P	E	P	E	P	E	P
309 L1	—	—	—	—	—	—	—	—	—	—	—	—	—	—	195	350	186	400	216	450	216	450
309 L2	—	—	—	—	—	—	—	—	—	—	114	300	144	350	144	350	174	400	—	—	—	—
309 L3	65	160	84	200	84	200	94	250	94	250	114	300	144	350	—	—	—	—	—	—	—	—
309 L4	65	160	84	200	84	200	94	250	94	250	114	300	144	350	—	—	—	—	—	—	—	—

	R	R1	Kg	V	V1	Kg	V	V1	Kg	V	V1	Kg	V	V1	Kg
309 R2	221	225	200	239	48	15	—	—	—	276	48	17	—	—	—
309 R3	283	140	190	137.5	24	6	158	38	7	—	—	—	—	—	—
309 R4	348	122	195	137.5	24	6	158	38	7	—	—	—	—	—	—

	P71		P80		P90		P100		P112		P132		P160		P180		P200	
	E	P	E	P	E	P	E	P	E	P	E	P	E	P	E	P	E	P
309 R2	—	—	—	—	—	—	—	—	—	—	114	300	144	350	144	350	174	400
309 R3	65	160	84	200	84	200	94	250	94	250	114	300	144	350	—	—	—	—
309 R4	65	160	84	200	84	200	94	250	94	250	114	300	144	350	—	—	—	—

309 VK

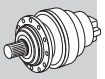

Metric

The diagram below allows the calculation of permitted overhung load R_{x2} on the output shaft of gearbox, with radial force applying at a distance x from shaft shoulder.
The curves are relevant to value resulting from the relationship of trust load A_{n2} to radial load R_{n2}, based on n_2 = 10 rpm and 10000 hrs theoretical lifetime.

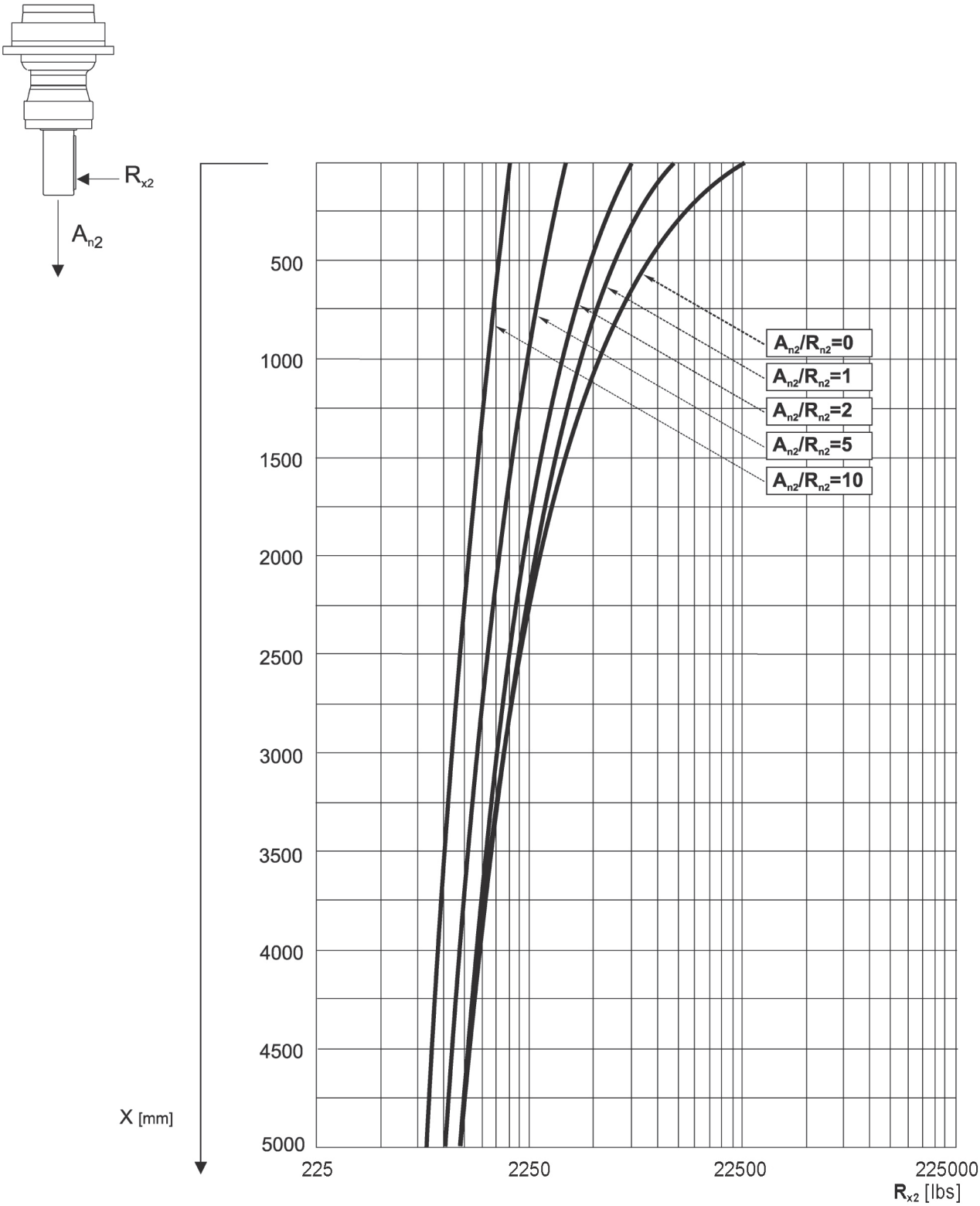

310M L

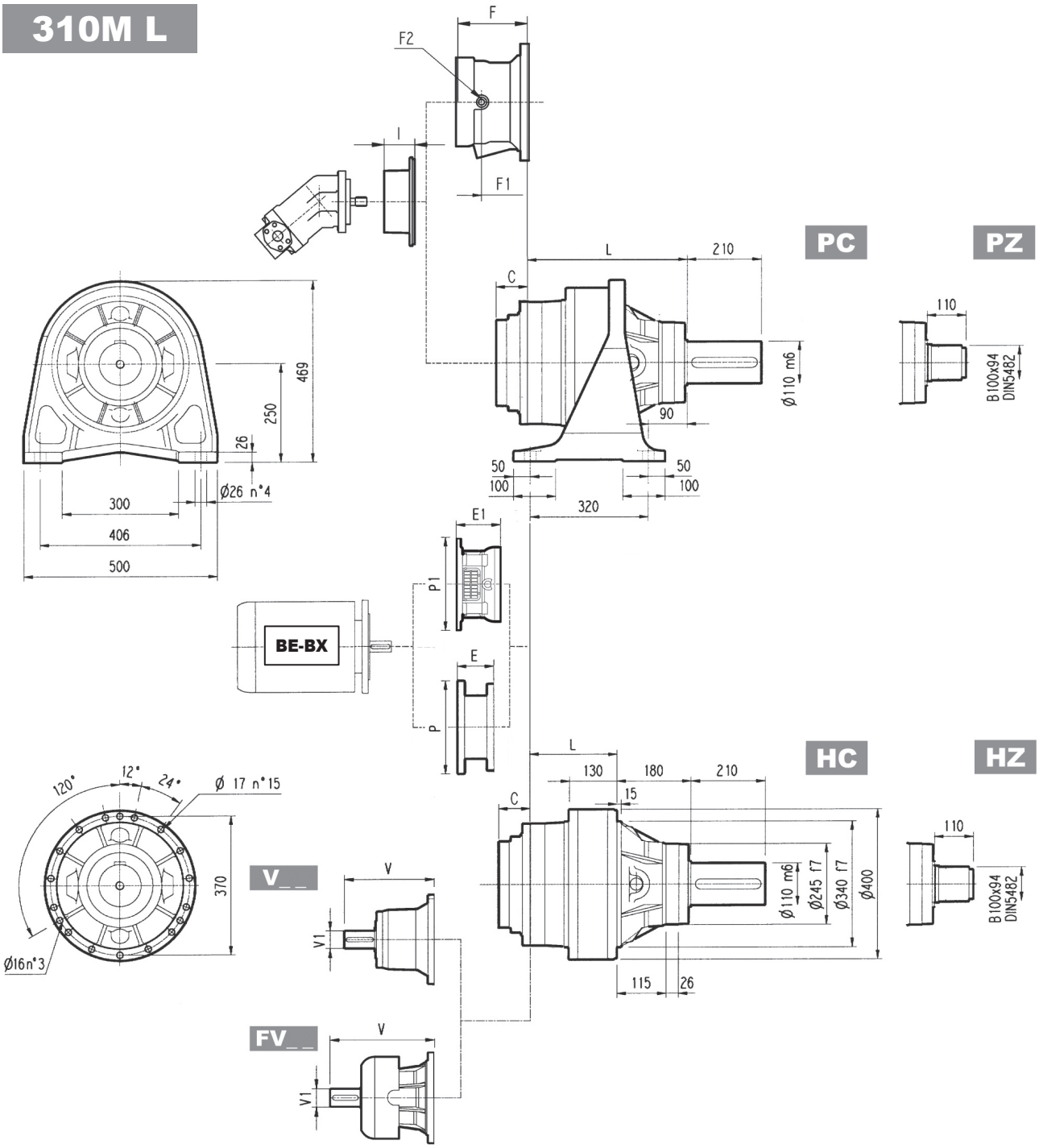

Dimensions are in mm

	L				Kg			
	PC - PZ	HC - HZ	FZ	FP - FDK	PC - PZ	HC - HZ	FZ	FP - FDK
310M L1	288	108	88	88	155	135	110	115
310M L2	424	244	224	224	185	165	140	145
310M L3	489	309	289	289	194	174	149	154
310M L4	542	362	342	342	198	178	153	158

	V	V1	Kg	V	V1	Kg	V	V1	Kg	C	Input	I	F	F1	F2	Type	Input	Kg
310M L1	377	80	50	—	—	—	457	80	63	88	C		—	—	—	—	—	—
310M L2	307	60	23	—	—	—	357	60	28	45	B		195	147	1/4 G	6	B	28
310M L3	239	48	15	—	—	—	276	48	17	37	A		145	95	1/4 G	5	A	16
310M L4	137.5	24	6	158	38	7	—	—	—	37	A	532	105	65	1/4 G	4	A	10

310M L

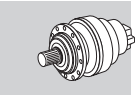

Metric

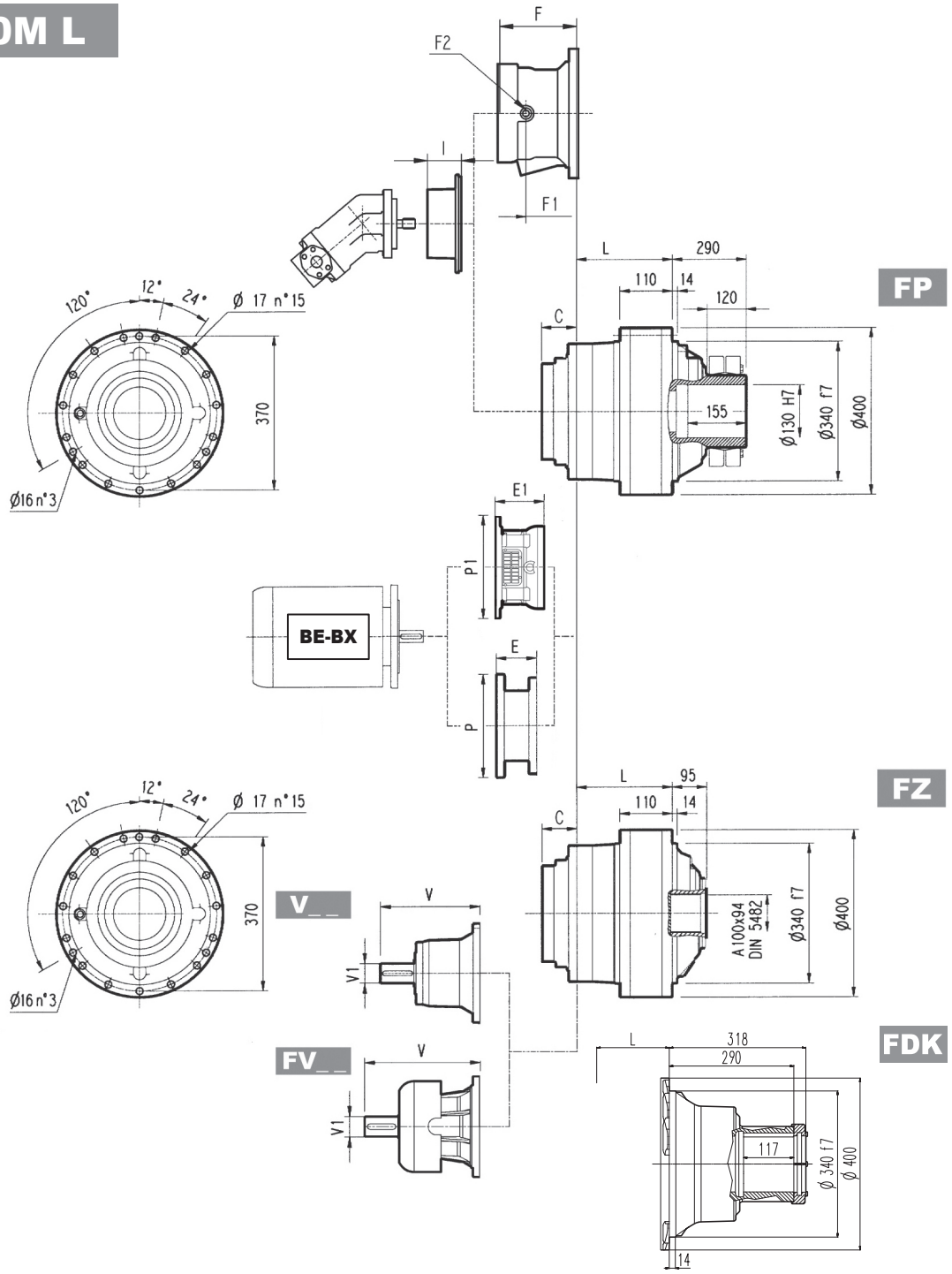

	PF 160		PF 180		PF 200		PF225		PF 250	
	E1	P1	E1	P1	E1	P1	E1	P1	E1	P1
310M L1*	—	—	—	—	—	—	254	550	254	550
310M L2	—	—	167	390	197	400	197	450	207	550
310M L3	165	400	165	400	195	400	195	450	—	—
310M L4	165	400	165	400	—	—	—	—	—	—

(*): for PC-PZ versions contact Bonfiglioli Technical Service
NOTE: for R design contact Bonfiglioli Technical Service

FP	**T_{2max} = 389,430 lb·in**

Dimensions are in mm

	P71		P80		P90		P100		P112		P132		P160		P180		P200		P225		P250	
	E	P	E	P	E	P	E	P	E	P	E	P	E	P	E	P	E	P	E	P	E	P
310M L1	—	—	—	—	—	—	—	—	—	—	—	—	—	—	—	—	271	400	301	450	281	550
310M L2	—	—	—	—	—	—	—	—	—	—	—	—	152	350	153	350	183	400	212	450	193	550
310M L3	—	—	—	—	—	—	—	—	—	—	114	300	144	350	144	350	174	400	—	—	—	—
310M L4	65	160	84	200	84	200	94	250	94	250	114	300	144	350	—	—	—	—	—	—	—	—

Bonfiglioli Riduttori

310M R

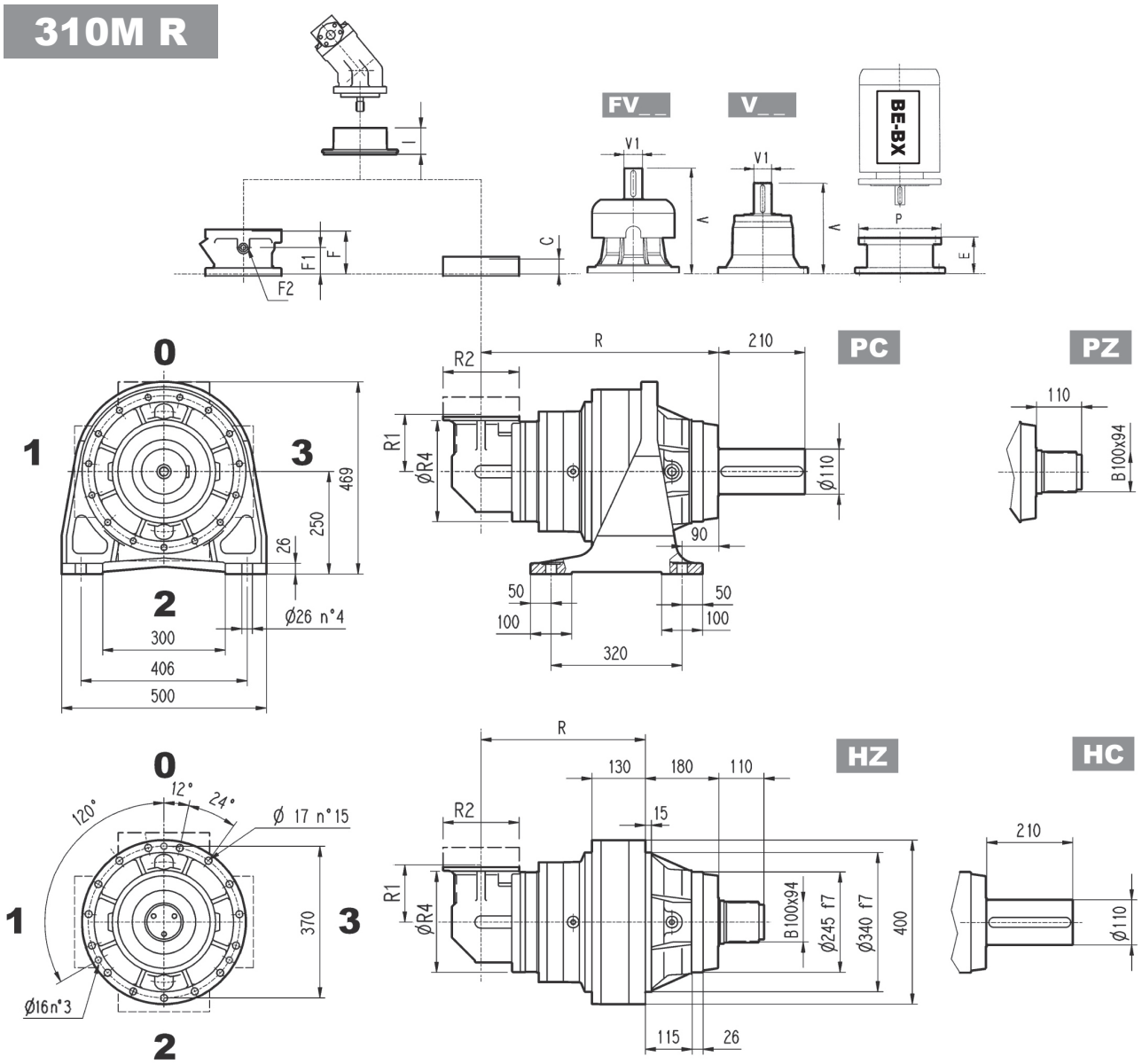

Dimensions are in mm

	R				R1	R2	R4	Kg			
	PC-PZ	HC-HZ	FZ	FP - FDK				PC-PZ	HC-HZ	FZ	FP - FDK
310M R2 (B)	495	315	295	295	345	292	400	280	260	240	250
310M R2 (C)	513	333	313	313	390	292	480	300	280	260	270
310M R3	561	381	361	361	140	186	244	209	189	164	169
310M R4	581	401	381	381	140	186	244	214	194	169	174

	V	V1	Kg	V	V1	Kg	V	V1	Kg	V	V1	Kg	C	Input	I	F	F1	F2	Type	Input	Kg
310M R2 (B)	307	60	23	—	—	—	357	60	28	—	—	—	45	B	532	195	147	1/4 G	6	B	28
310M R2 (C)	307	60	23	—	—	—	357	60	28	—	—	—	45	B		195	147	1/4 G	6	B	28
310M R3	137.5	24	6	158	38	7	—	—	—	—	—	—	37	A		145	95	1/4 G	4	A	16
310M R4	137.5	24	6	158	38	7	—	—	—	—	—	—	37	A		105	65	1/4 G	4	A	10

310M R

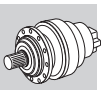

Metric

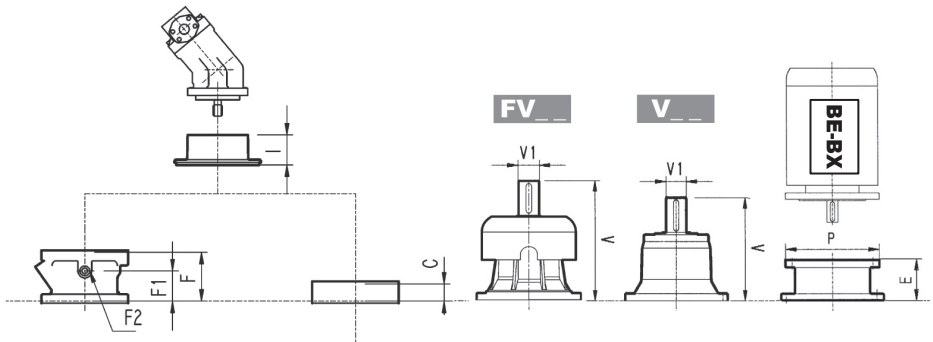

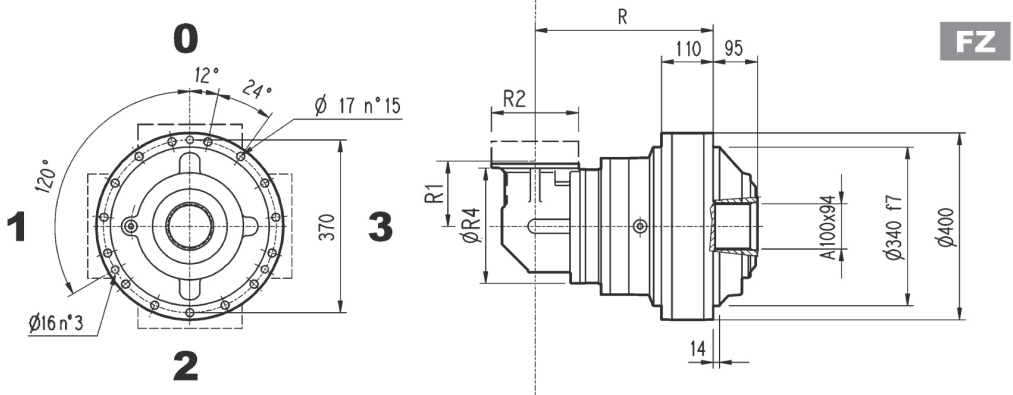

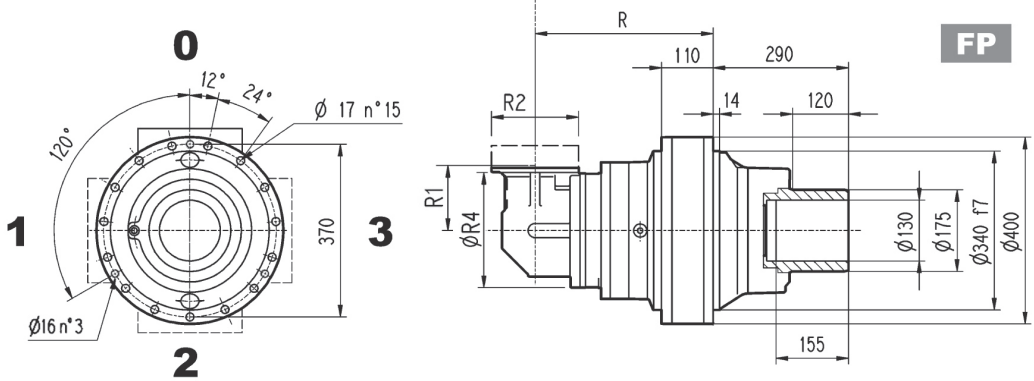

Only for configuration:

R2

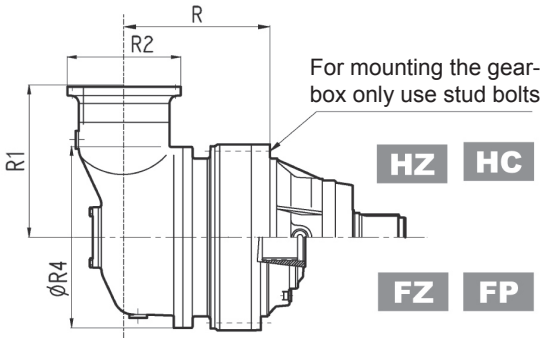

For mounting the gear-box only use stud bolts

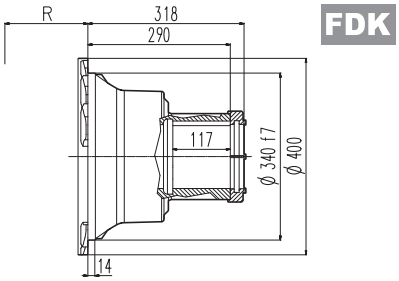

FP | **T_{2max} = 389,430 lb·in**

Dimensions are in mm

	P71		P80		P90		P100		P112		P132		P160		P180		P200		P225	
	E	P	E	P	E	P	E	P	E	P	E	P	E	P	E	P	E	P	E	P
310M R2 (B)	—	—	—	—	—	—	—	—	—	—	—	—	152	350	152	350	182	400	212	450
310M R2 (C)	—	—	—	—	—	—	—	—	—	—	—	—	152	350	152	350	182	400	212	450
310M R3	65	160	84	200	84	200	94	250	94	250	114	300	144	350	—	—	—	—	—	—
310M R4	65	160	84	200	84	200	94	250	94	250	114	300	144	350	—	—	—	—	—	—

Bonfiglioli Riduttori

310M L

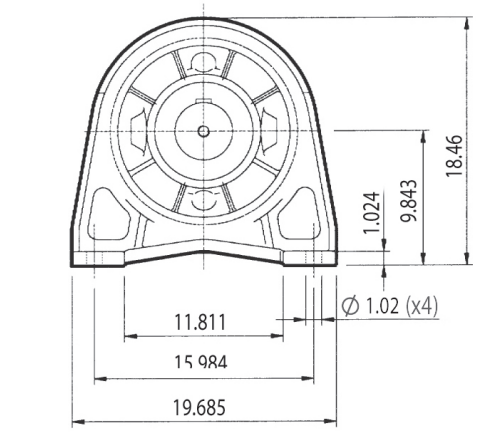

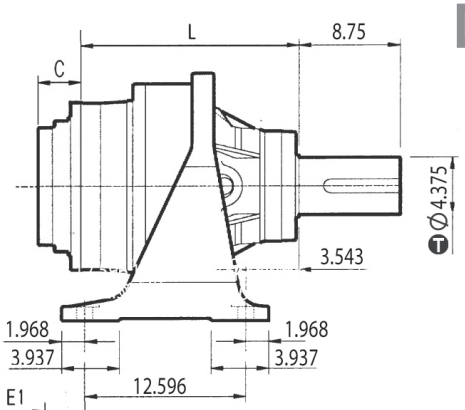

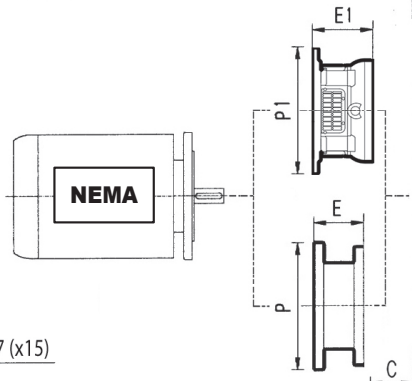

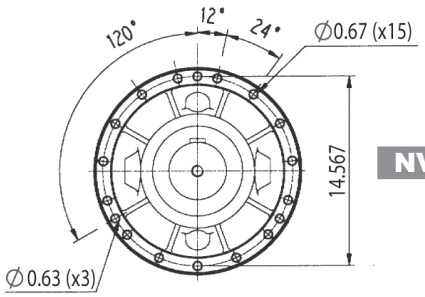

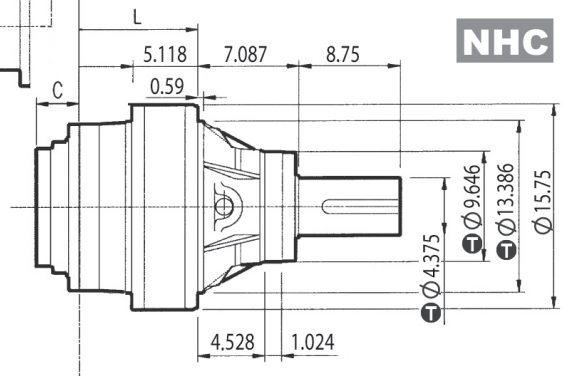

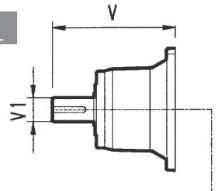

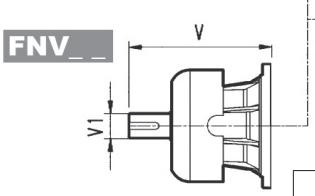

	PF N250TC		PF N280TC		PF N320TC		PF N360TC	
	E1	P1	E1	P1	E1	P1	E1	P1
310M L1 *	—	—	—	—	—	—	12.598	21.654
310M L2	—	—	8.740	15.354	9.921	15.748	10.315	17.717
310M L3	8.661	15.748	8.661	15.748	9.843	15.748	10.236	17.717
310M L4	8.661	15.748	8.661	15.748	—	—	—	—

(*) : for NPC version contact Bonfiglioli technical service
NOTE: for R design contact Bonfiglioli Technical Service
for PF N400TC contact Bonfiglioli Technical Service

inch	T
13.386	-0.00244 / -0.00469
9.646	-0.00197 / -0.00378
4.375	-0.00142 / -0.00280

Dimensions are in Inch except when shown in *italic [mm]*

	L		lbs	
	NPC	NHC	NPC	NHC
310M L1	11.339	4.252	341.8	297.7
310M L2	16.693	9.606	407.9	363.8
310M L3	19.252	12.165	427.8	383.7
310M L4	21.339	14.252	436.6	392.5

	V	V1	lbs	V	V1	lbs	V	V1	lbs	C	Input
310M L1	14.724	3.000	110.3	—	—	—	17.874	3.000	130.0	3.465	C
310M L2	12.703	2.375	50.7	—	—	—	14.652	2.375	58.0	1.772	B
310M L3	9.681	1.875	33.1	—	—	—	11.138	1.875	38.0	1.457	A
310M L4	5.996	1.125	13.2	6.437	1.625	15.4	—	—	—	1.457	A

	N56C		N140TC		N180TC		N210TC		N250TC		N280TC		N320TC		N360TC	
	E	P	E	P	E	P	E	P	E	P	E	P	E	P	E	P
310M L1	—	—	—	—	—	—	—	—	—	—	—	—	7.776	13.779	7.776	13.779
310M L2	—	—	—	—	—	—	—	—	—	—	—	—	7.776	13.779	7.776	13.779
310M L3	—	—	—	—	—	—	—	—	5.216	11.811	6.221	13.780	—	—	—	—
310M L4	4.508	6.693	4.508	6.693	5.216	8.819	5.216	8.819	5.216	8.819	6.122	11.811	—	—	—	—

310M R

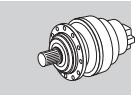

Imperial

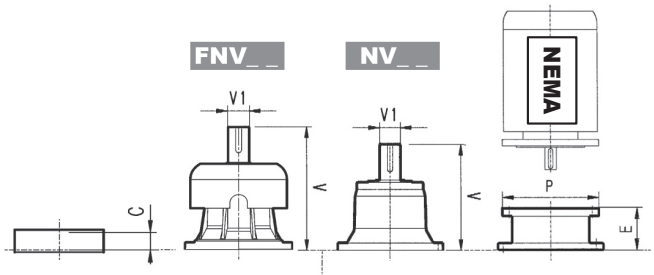

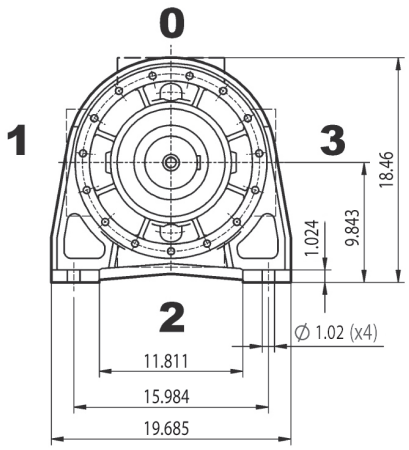

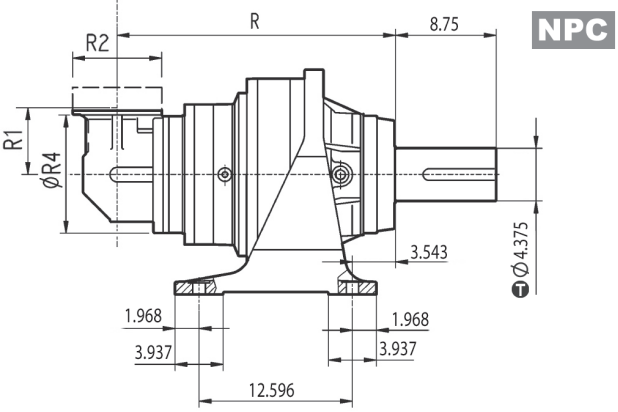

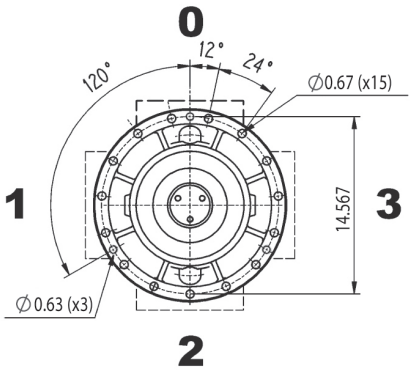

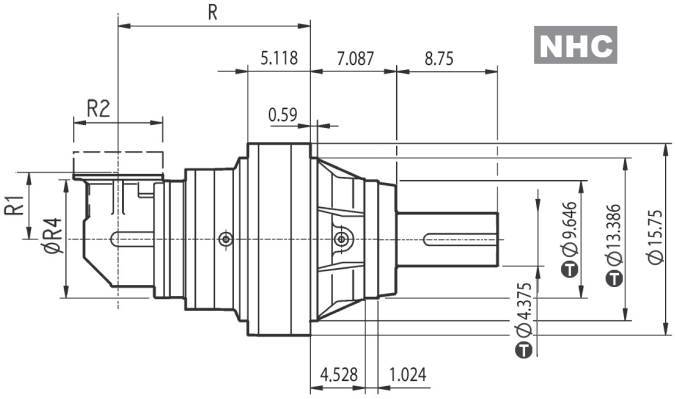

Only for configuration:

R2

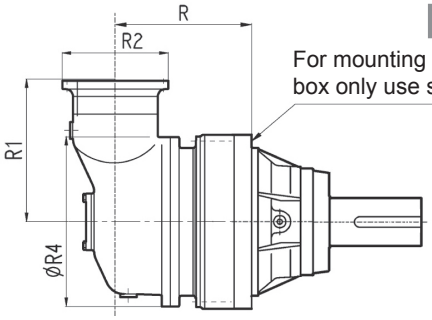

For mounting the gear-box only use stud bolts

inch	T
13.386	-0.00244 -0.00469
9.646	-0.00197 -0.00378
4.375	-0.00142 -0.00280

Dimensions are in Inch except when shown in *italic [mm]*

	R		R1	R2	R4	lbs	
	NPC	NHC				NPC	NHC
310M R2 (B)	19.488	12.402	13.583	11.496	15.748	680.0	573.3
310M R2 (C)	20.197	13.110	15.354	11.496	18.898	617.4	680.0
310M R3	22.087	15.000	5.512	7.323	9.606	460.8	416.7
310M R4	22.087	15.787	5.512	7.323	9.606	471.9	427.8

	V	V1	lbs	V	V1	lbs	V	V1	lbs	C	Input
310M R2 (B)	12.703	2.375	50.7	—	—	—	14.652	2.375	58.0	1.772	B
310M R2 (C)	12.703	2.375	50.7	—	—	—	14.652	2.375	58.0	1.772	B
310M R3	5.996	1.125	13.2	6.437	1.625	15.4	—	—	—	1.457	A
310M R4	5.996	1.125	13.2	6.437	1.625	15.4	—	—	—	1.457	A

	N56C		N140TC		N180TC		N210TC		N250TC		N280TC		N320TC		N360TC	
	E	P	E	P	E	P	E	P	E	P	E	P	E	P	E	P
310M R2 (B)	—	—	—	—	—	—	—	—	—	—	—	—	7.776	13.779	7.776	13.779
310M R2 (C)	—	—	—	—	—	—	—	—	—	—	—	—	7.776	13.779	7.776	13.779
310M R3	4.508	6.693	4.508	6.693	5.216	8.819	5.216	8.819	5.216	8.819	6.122	11.811	—	—	—	—
310M R4	4.508	6.693	4.508	6.693	5.216	8.819	5.216	8.819	5.216	8.819	6.122	11.811	—	—	—	—

Bonfiglioli Riduttori

3/V 10M L3

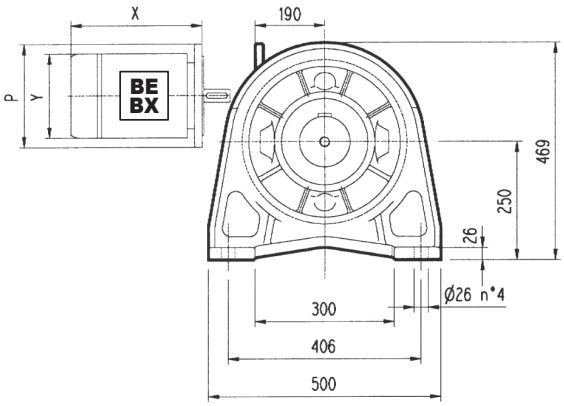

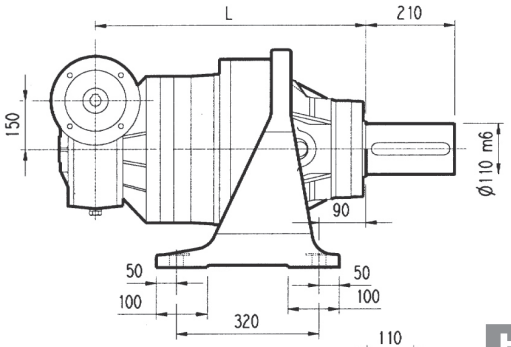

PC

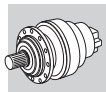

Metric

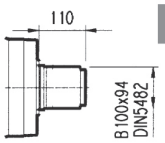

HZ PZ

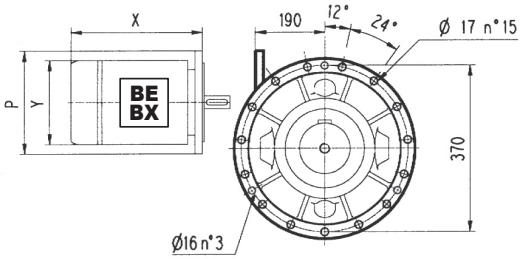

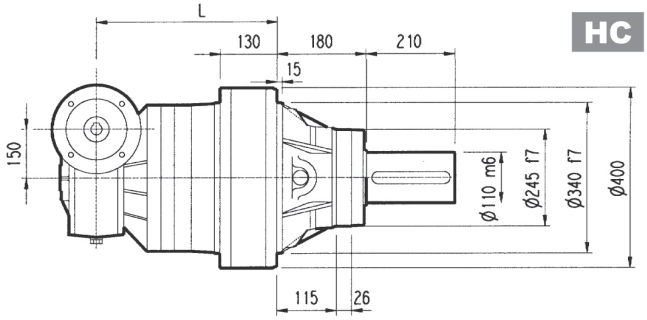

HC

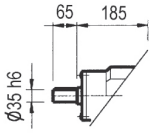

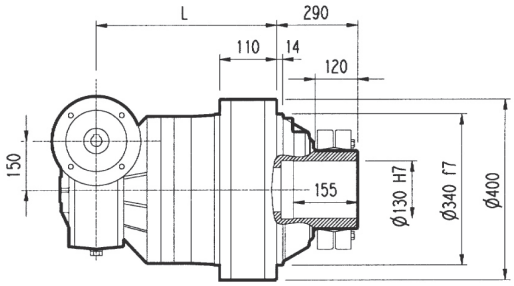

FP

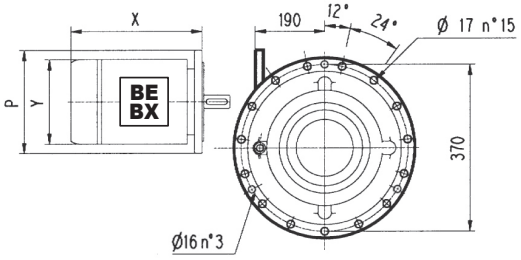

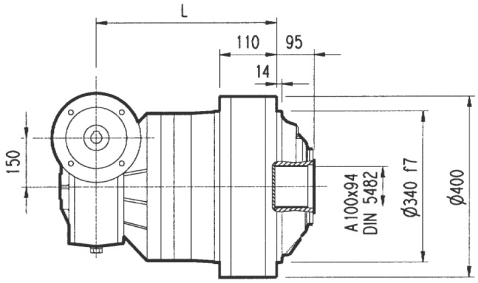

FZ

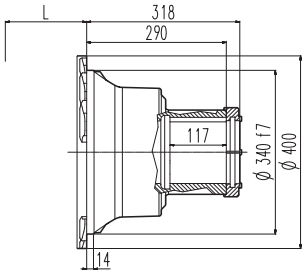

FDK

FP	T_{2max} = 389,430 lb·in

Dimensions are in mm

	L				Kg				P100	P112	P132	P160
	PC - PZ	HC - HZ	FZ	FP - FDK	PC - PZ	HC - HZ	FZ	FP - FDK	P	P	P	P
3/V 10M L3	608	428	408	408	245	225	200	205	250	250	300	300

3/V 10M L3

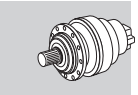

Imperial

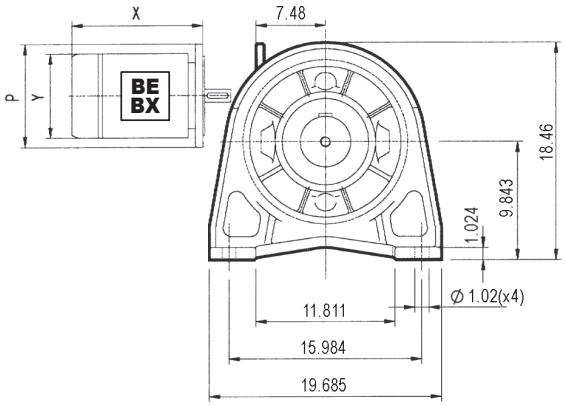

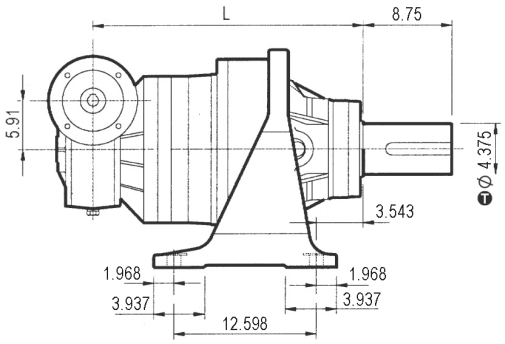

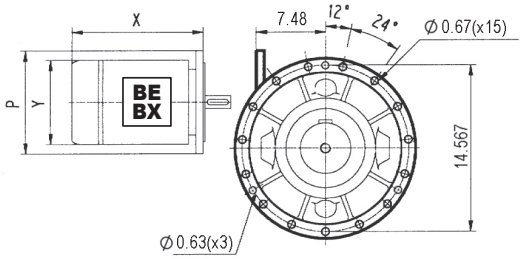

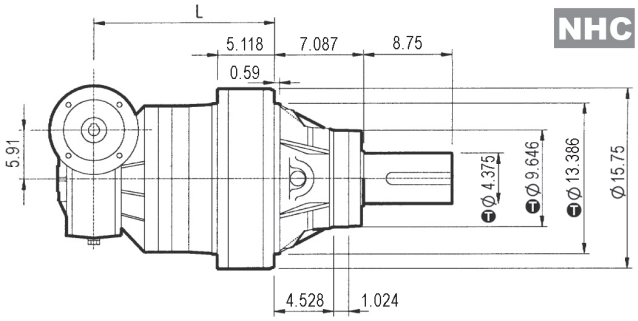

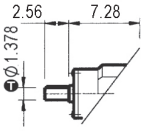

inch	T
13.386	-0.00244 -0.00469
9.646	-0.00197 -0.00378
4.375	-0.00142 -0.00280

Dimensions are in Inch except when shown in *italic [mm]*

	L		lbs		P100	P112	P132	P160
	NPC	NHC	NPC	NHC	P	P	P	P
3/V 10M L3	23.94	16.85	540.2	496.1	9.84	9.84	11.81	11.81

Bonfiglioli Riduttori

3/V 10M L4

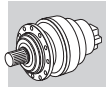

Metric

PC

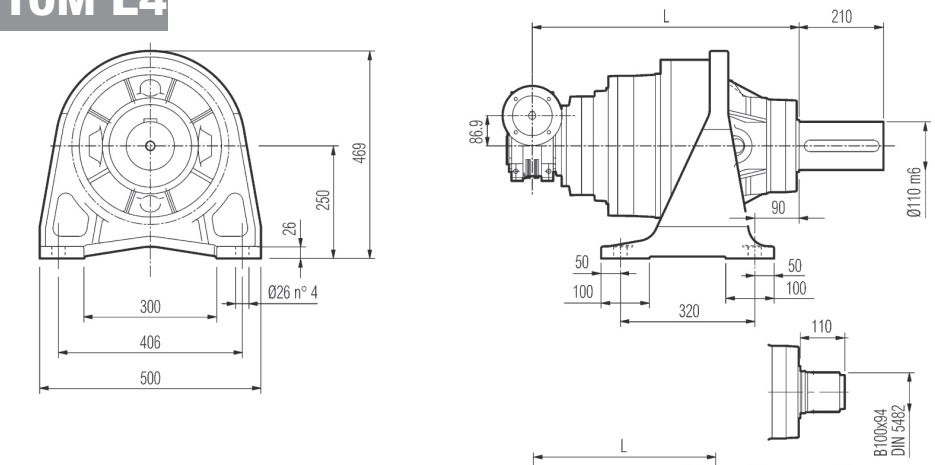

HZ PZ

HC

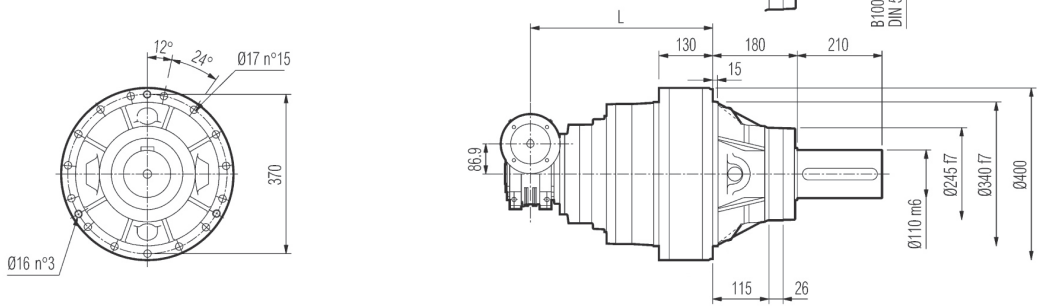

FP

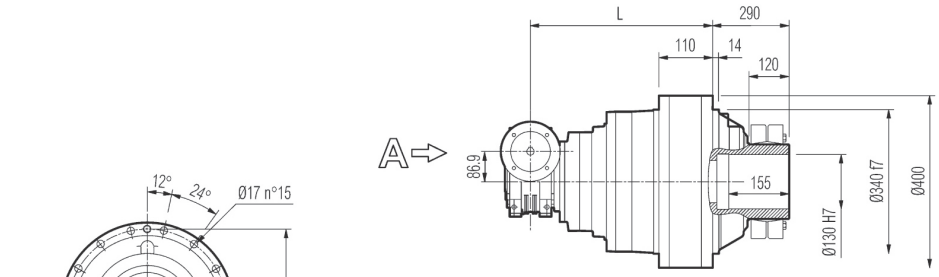

FZ

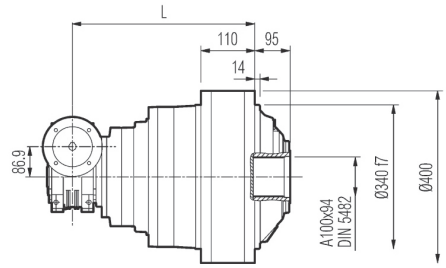

FDK

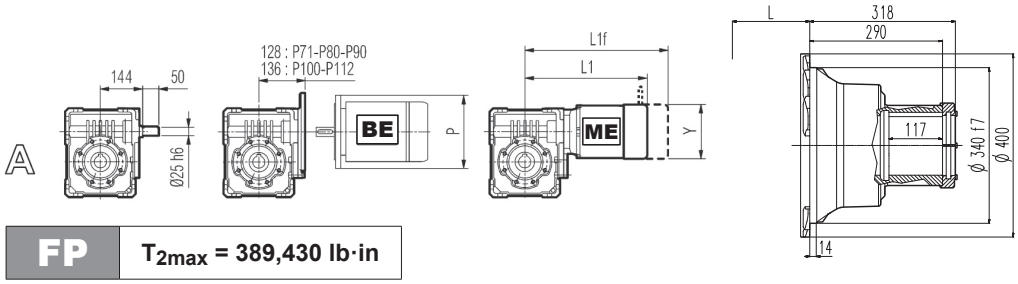

FP	T_{2max} = 389,430 lb·in

Dimensions are in mm

	L				Kg			
	PC - PZ	HC - HZ	FZ	FP	PC - PZ	HC - HZ	FZ	FP - FDK
3/V 10M L4	634	454	434	434	210	190	165	170

	P71	P80	P90	P100	P112	S1 + M1			S2 + ME2S			S3 + ME3S			S3 + ME3L		
	P	P	P	P	P	L1	L1f	Y	L1	L1f	Y	L1	L1f	Y	L1	L1f	Y
3/V 10M L4	160	200	200	250	250	324	385	138	349	—	156	392	—	193	424	—	193

3/V 10M L4

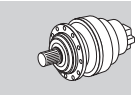

Imperial

NPC

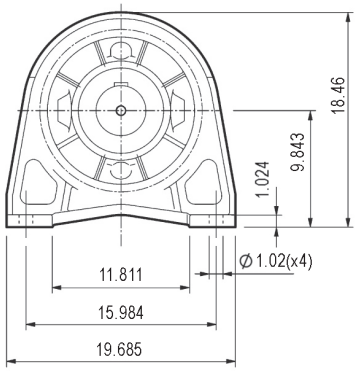

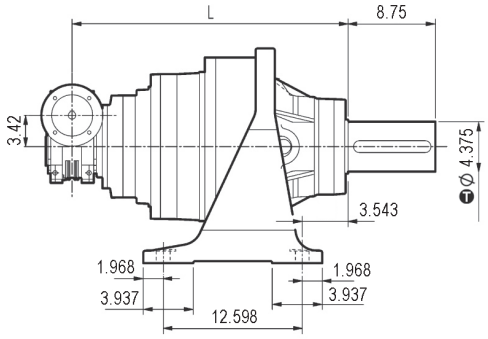

NHC

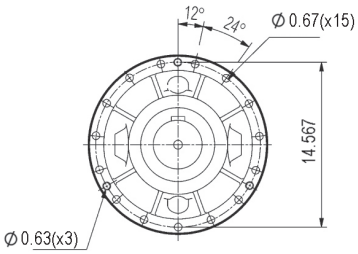

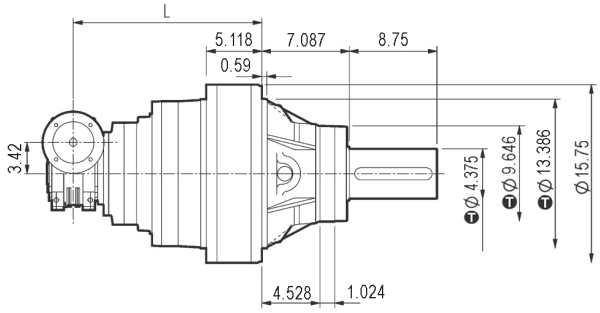

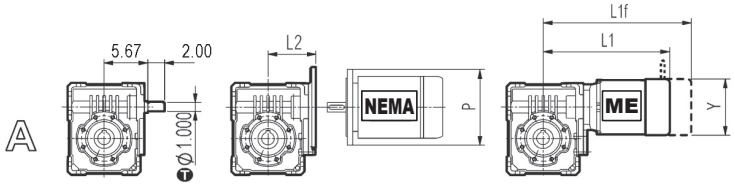

inch	T
13.386	-0.00244 -0.00469
9.646	-0.00197 -0.00378
4.375	-0.00142 -0.00280

Dimensions are in Inch except when shown in *italic [mm]*

	L		lbs		N56C		N140TC		N180TC	
	NPC	NHC	NPC	NHC	L2	P	L2	P	L2	P
3/V 10M L4	24.96	17.87	463.1	419	4.74	6.54	4.74	6.54	5.45	9.02

	S1 + M1			S2 + ME2S			S3 + ME3S			S3 + ME3L		
	L1	L1f	Y	L1	L1f	Y	L1	L1f	Y	L1	L1f	Y
3/V 10M L4	12.756	15.157	5.433	13.740	—	6.142	15.433	—	7.598	16.693	—	7.598

Bonfiglioli Riduttori

310M L | 310M R | 3/V 10M L

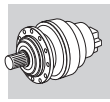

Metric

Imperial

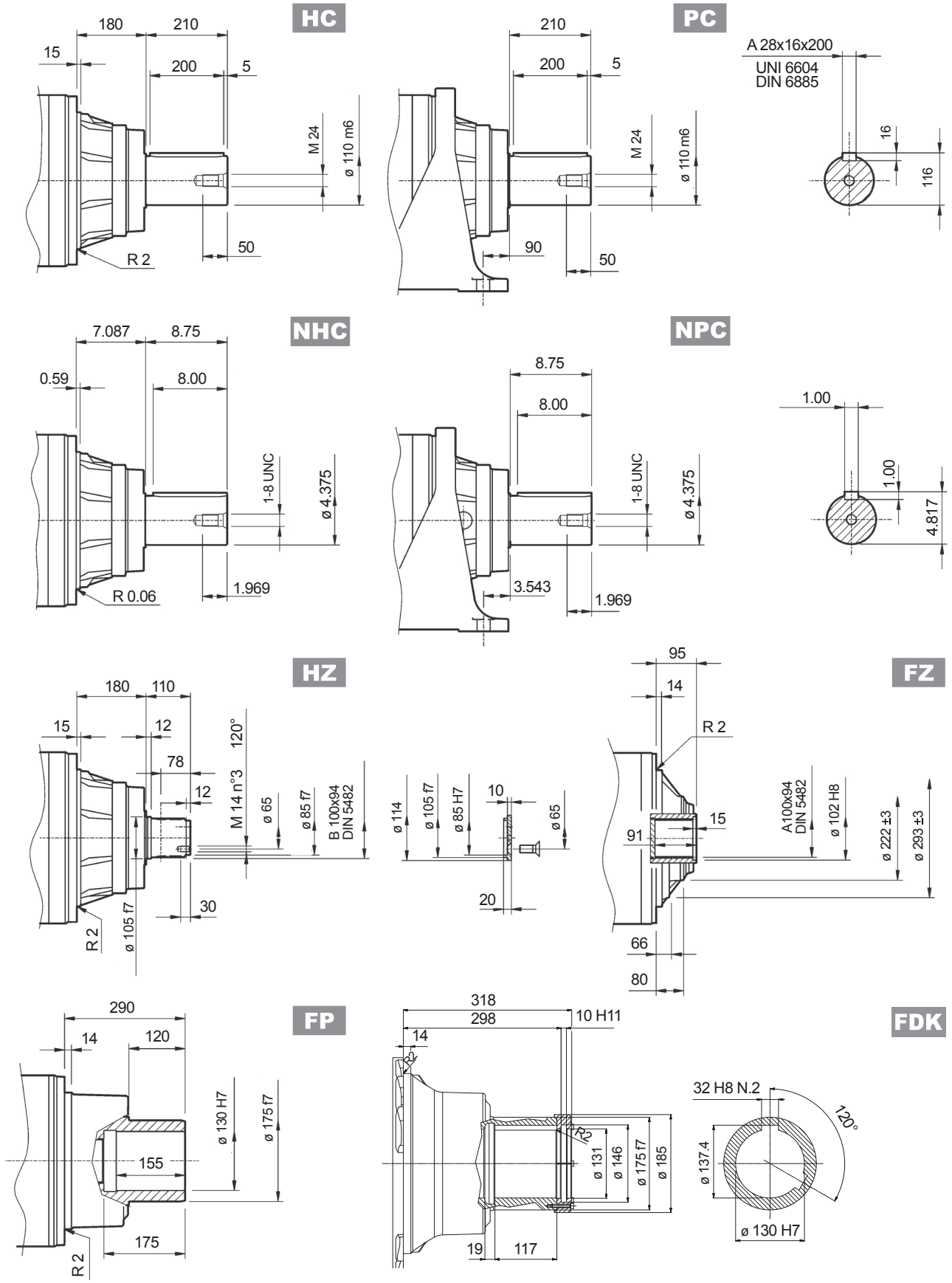

FP	T_{2max} = 389,430 lb·in

Dimensions are in mm when shown in italic, otherwise dimensions are in inches

inch	T
4.375	-0.00142 -0.00280

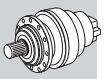

Flange

W0A

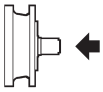

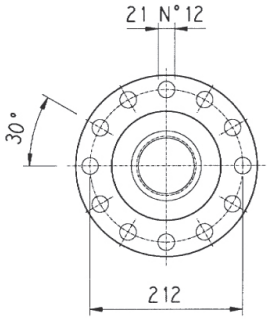

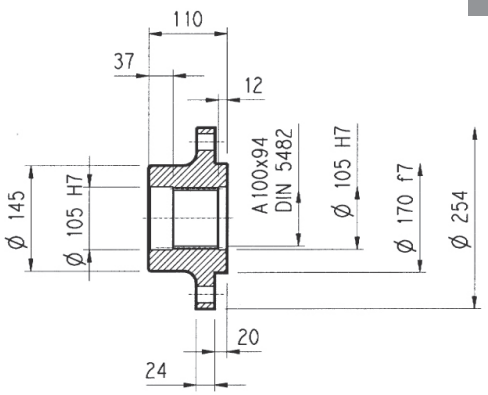

Material: Steel C40

Dimensions are in mm

Pinions

P...

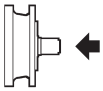

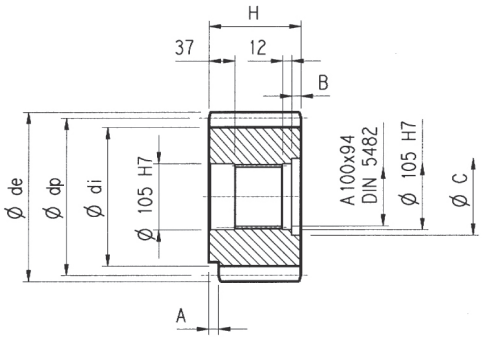

α = 20°

Dimensions are in mm

	m	z	x	dp	di	de	H	A	B	C	Material
PLQ	12	23	—	276	246	300	110	—	—	—	Steel 18NiCrMo5 case hardened
PPD	16	13	0.500	208	184	252.5	145	—	35	116	Steel 39NiCrMo3 hardened and tempered
PPF	16	15	0.450	240	215	280	125	—	15	120	

Sleeve coupling

M0A

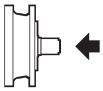

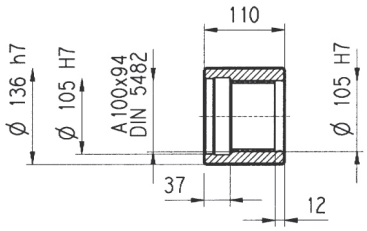

Material: Steel 16CrNi4

Dimensions are in mm

Splined bars

B0A

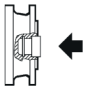

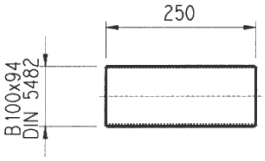

Material: Case hardening steel 18NiCrMo5 UNI 5331
must be case hardened 50-55 HRC

Shrink disc

G0A

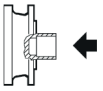

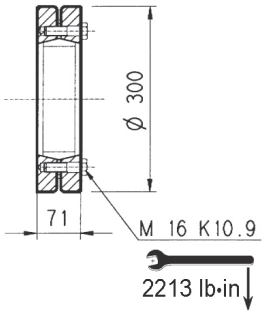

Dimensions are in mm

310M L 310M R

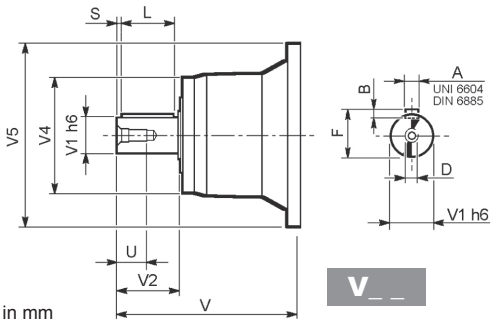

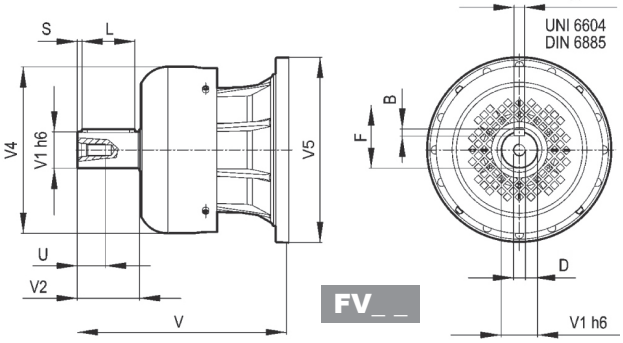

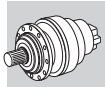

Metric

Dimensions are in mm

		V	V1	V2	V4	V5	A	B	F	L	S	D	U
310M L1	**V10B**	377	80	130	200	400	22	14	85	110	10	M16	36
	FV10B	457	80	130	347.5	400	22	14	85	110	10	M16	36
310M L2	**V06B**	307	60	105	155	292	18	11	64	90	7.5	M16	36
	FV06B	357	60	105	309	292	18	11	64	90	7.5	M16	36
310M L3	**V05B**	239	48	82	155	245	14	9	51.5	70	6	M16	36
	FV05B	276	48	82	219.5	244	14	9	51.5	70	6	M16	36
310M L4	**V01A**	137.5	24	36	120	186	8	7	27	30	3	M8	19
	V01B	158	38	58	120	186	10	8	41	50	4	M12	28
310M R2 (B) (C)	**V06B**	307	60	105	155	292	18	11	64	90	7.5	M16	36
	FV06B	357	60	105	309	292	18	11	64	90	7.5	M16	36
310M R3-R4	**V01A**	137.5	24	36	120	186	8	7	27	30	3	M8	19
	V01B	158	38	58	120	186	10	8	41	50	4	M12	28

310M L 310M R

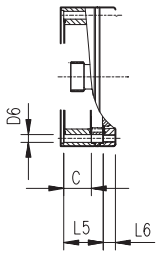

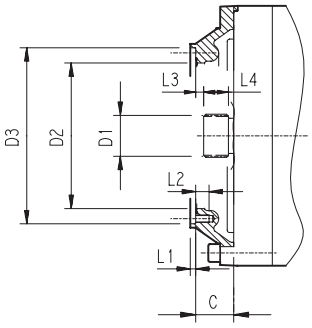

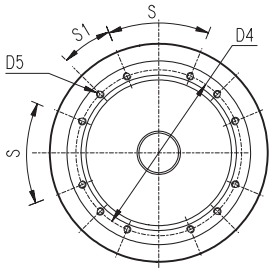

Dimensions are in mm

		C	D1	D2	D3	D4	D5	D6	L1	L2	L3	L4	L5	L6	S	S1	Input
310M L1	**V9AC**	88	70x64 DIN 5482	200	282 H7	266	M12 n°12	—	4	22	11	32	—	—	45°	45°	C
310M L2	**V9AB**	45	58x53 DIN 5482	195	236 H7	222	M10 n°12	—	4	18	11	22	—	—	45°	22.5°	B
310M L3	**V9AA**	37	40x36 DIN 5482	140	178 H7	165	M10 n°8	—	4	18	9	18	—	—	45°	45°	A
310M L4	**V9AA**	37	40x36 DIN 5482	140	178 H7	165	M10 n°8	11	4	—	9	18	53	18	45°	45°	A
310M R2 (B) (C)	**V9AB**	45	58x53 DIN 5482	195	236 H7	222	M10 n°12	—	4	18	11	22	—	—	45°	22.5°	B
310M R3-R4	**V9AA**	37	40x36 DIN 5482	140	178 H7	165	M10 n°8	11	4	—	9	18	37	18	45°	45°	A

3/V 10M L

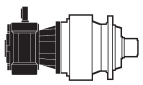

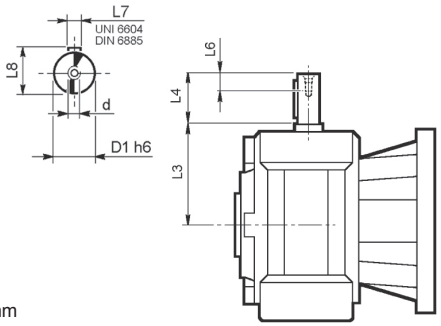

Dimensions are in mm

	D1 h6	L3	L4	L6	L7	L8	d
3/V 10M L3_HS	35	185	65	20	10	38	M8
3/V 10M L4_HS	25	144	50	19	8	28	M8

310M L 310M R

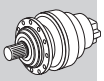

Imperial

inch	Ⓣ
3.000	0 -0.00075
2.375	0 -0.00053
1.875	0 -0.00053
1.625	0 -0.00053
1.125	0 -0.00051

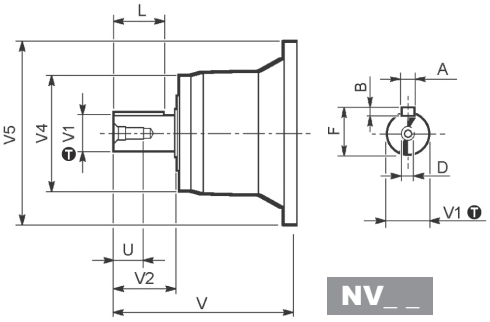

NV_ _

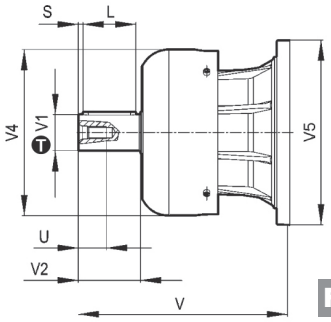

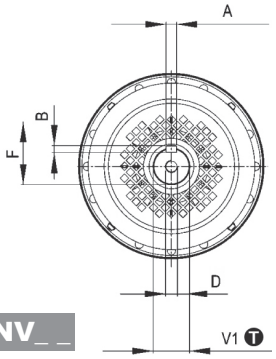

FNV_ _

Dimensions are in Inch except when shown in *italic [mm]*

		V	V1	V2	V4	V5	A	B	F	L	D	U
310M L1	**NV10B**	14.724	3.000	5.000	7.165	15.748	0.750	0.750	3.328	4.374	3/4 -10 UNC	1.654
	FNV10B	17.874	3.000	5.000	13.677	15.748	0.750	0.750	3.328	4.374	3/4 -10 UNC	1.654
310M L2	**NV06B**	12.703	2.375	4.750	6.417	11.496	0.625	0.625	2.646	4.252	3/4 -10 UNC	1.654
	FNV06B	14.652	2.375	4.750	12.165	11.496	0.625	0.625	2.646	4.252	3/4 -10 UNC	1.654
310M L3	**NV05B**	9.681	1.875	3.500	6.417	9.606	0.500	0.500	2.091	3.000	5/8-11 UNC	1.417
	FNV05B	11.138	1.875	3.500	8.641	9.606	0.500	0.500	2.091	3.000	5/8-11 UNC	1.417
310M L4	**NV01A**	5.996	1.125	2.000	4.980	7.323	0.250	0.250	1.236	1.752	3/8-16 UNC	0.866
	NV01B	6.437	1.625	2.500	4.980	7.323	0.375	0.375	1.791	2.000	1/2-13 UNC	1.102
310M R2 (B) (C)	**NV06B**	12.703	2.375	4.750	6.417	11.496	0.625	0.625	2.646	4.252	3/4 -10 UNC	1.654
	FNV06B	14.652	2.375	4.750	12.165	11.496	0.625	0.625	2.646	4.252	3/4 -10 UNC	1.654
310M R3-R4	**NV01A**	5.996	1.125	2.000	4.980	7.323	0.250	0.250	1.236	1.752	3/8-16 UNC	0.866
	NV01B	6.437	1.625	2.500	4.980	7.323	0.375	0.375	1.791	2.000	1/2-13 UNC	1.102

310M L 310M R

inch	Ⓣ
11.10	+0.00204 0
9.29	+0.00181 0
7.01	+0.00157 0

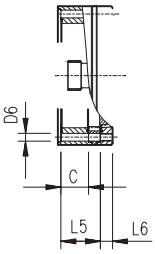

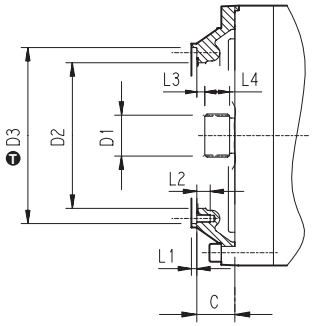

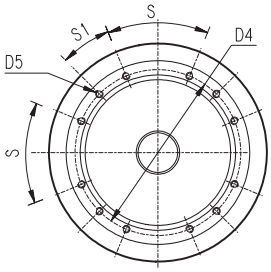

Dimensions are in Inch except when shown in *italic [mm]*

		C	D1	D2	D3	D4	D5	D6	L1	L2	L3	L4	L5	L6	S	S1	Input
310M L1	**V9AC**	3.46	*70x64 DIN 5482*	7.87	11.10	10.47	*M12 n°12*	—	0.16	0.87	0.43	1.26	—	—	45°	45°	C
310M L2	**V9AB**	1.77	*58x53 DIN 5482*	7.68	9.29	8.74	*M10 n°12*	—	0.16	0.71	0.43	0.87	—	—	45°	22.5°	B
310M L3	**V9AA**	1.46	*40x36 DIN 5482*	5.51	7.01	6.50	*M10 n°8*	—	0.16	0.71	0.35	0.71	—	—	45°	45°	A
310M L4	**V9AA**	1.46	*40x36 DIN 5482*	5.51	7.01	6.50	*M10 n°8*	0.43	0.16	—	0.35	0.71	2.09	0.71	45°	45°	A
310M R2 (B) (C)	**V9AB**	1.77	*58x53 DIN 5482*	7.68	9.29	8.74	*M10 n°12*	—	0.16	0.71	0.43	0.87	—	—	45°	22.5°	B
310M R3-R4	**V9AA**	1.46	*40x36 DIN 5482*	5.51	7.01	6.50	*M10 n°8*	0.43	0.16	—	0.35	0.71	1.46	0.71	45°	45°	A

3/V 10M L

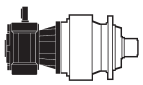

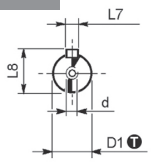

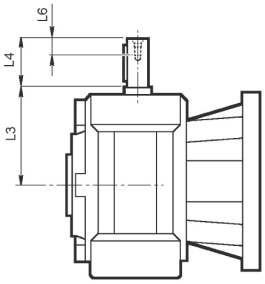

inch	Ⓣ
1.378	0 -0.00063
1.000	0 -0.00051

Dimensions are in Inch except when shown in *italic [mm]*

	D1	L3	L4	L6	L7	L8	d
3/V 10M L3_HS	1.378	7.28	2.56	0.787	0.394	1.496	*M8*
3/V 10M L4_NHS	1.000	11.89	1.969	0.75	0.250	1.109	3/8-16UNC

Bonfiglioli Riduttori

310M L 310M R 3/V 10M L

Permissible radial and axial loads on output shaft with $Fh_2 : n_2 \cdot h = 100000$

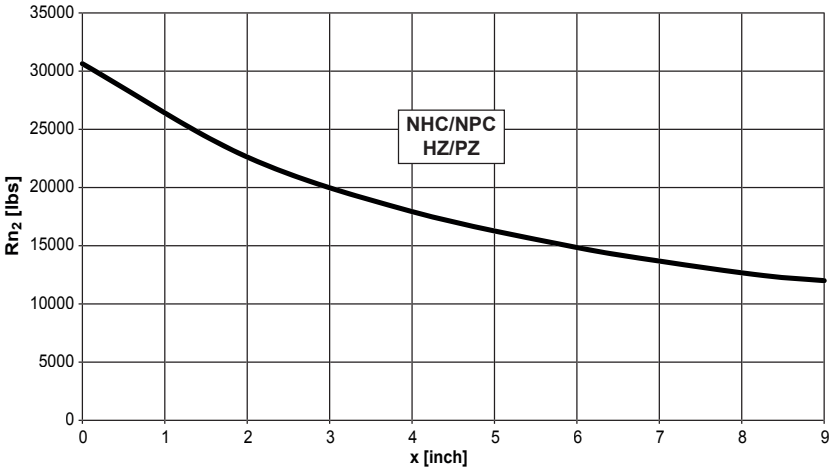

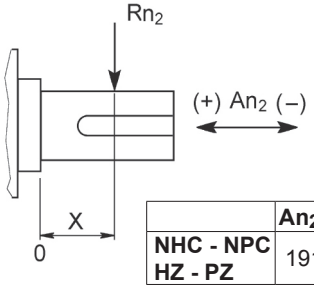

	An2 (+)	An2 (-)
NHC - NPC HZ - PZ	19108	11240

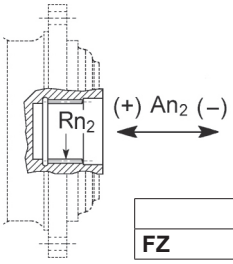

	Rn2	An2 (+/-)
FZ	6782	5426

Load corrective factor fh_2 on shafts	$Fh_2 = n_2 \cdot h$		10000	25000	50000	100000	500000	1000000
	fh_2	FZ	**2.15**	**1.59**	**1.26**	**1.00**	**0.58**	**0.46**
		NHC - NPC - HZ -PZ	**1.27**	**1.27**	**1.23**	**1.00**	**0.62**	**0.50**

Permissible radial loads on input shaft with $Fh_1 : n_1 \cdot h = 250000$

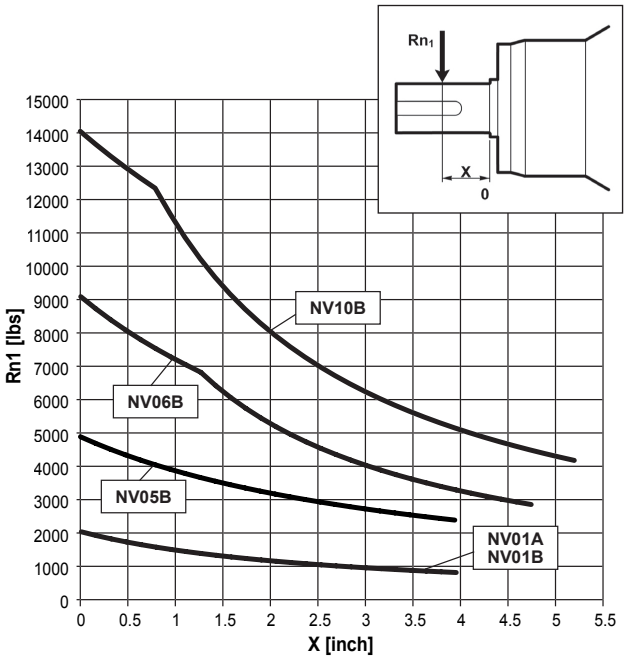

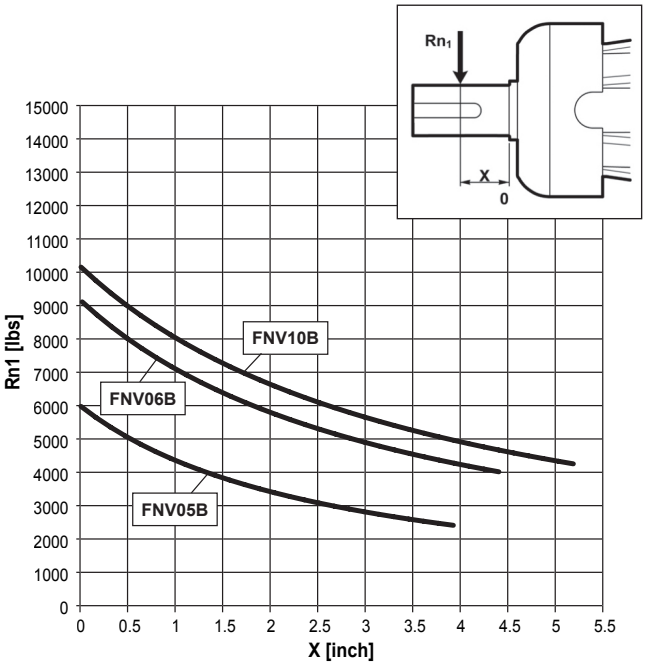

Load corrective factor fh_1 on shafts	$Fh_1 = n_1 \cdot h$	250000	500000	1000000	2000000	5000000	10000000
	fh_1	**1**	**0.79**	**0.63**	**0.50**	**0.37**	**0.29**

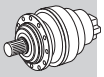

310M VK

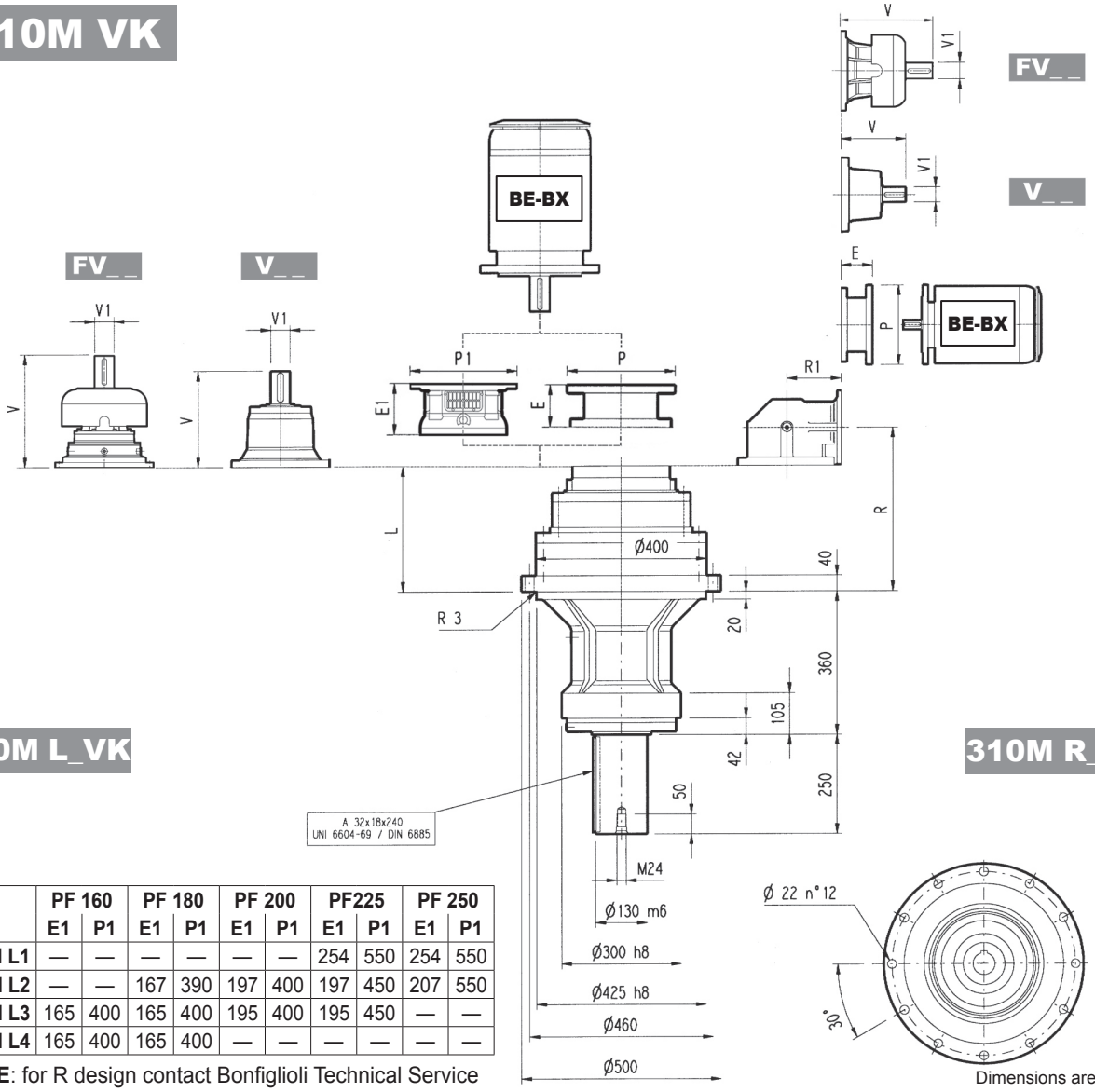

310M L_VK

310M R_VK

	PF 160		PF 180		PF 200		PF225		PF 250	
	E1	P1	E1	P1	E1	P1	E1	P1	E1	P1
310M L1	—	—	—	—	—	—	254	550	254	550
310M L2	—	—	167	390	197	400	197	450	207	550
310M L3	165	400	165	400	195	400	195	450	—	—
310M L4	165	400	165	400	—	—	—	—	—	—

NOTE: for R design contact Bonfiglioli Technical Service

Dimensions are in mm

	L	Kg	V	V1	Kg	V	V1	Kg	V	V1	Kg	V	V1	Kg
310M L1	107	200	377	80	50	—	—	—	457	80	63	—	—	—
310M L2	243	230	307	60	23	—	—	—	357	60	28	—	—	—
310M L3	308	240	239	48	15	—	—	—	276	48	17	—	—	—
310M L4	361	245	137.5	24	6	158	38	7	—	—	—	—	—	—

	P71		P80		P90		P100		P112		P132		P160		P180		P200		P225		P250	
	E	P	E	P	E	P	E	P	E	P	E	P	E	P	E	P	E	P	E	P	E	P
310M L1	—	—	—	—	—	—	—	—	—	—	—	—	—	—	—	—	271	400	301	450	281	550
310M L2	—	—	—	—	—	—	—	—	—	—	—	—	152	350	153	350	183	400	212	450	193	550
310M L3	—	—	—	—	—	—	—	—	—	—	114	300	144	350	144	350	174	400	—	—	—	—
310M L4	65	160	84	200	84	200	94	250	94	250	114	300	144	350	—	—	—	—	—	—	—	—

	R	R1	Kg	V	V1	Kg	V	V1	Kg	V	V1	Kg	V	V1	Kg
310M R2 (B)	315	345	320	307	60	23	—	—	—	357	60	28	—	—	—
310M R2 (C)	333	390	340	307	60	23	—	—	—	357	60	28	—	—	—
310M R3	380	140	250	137.5	24	6	158	38	7	—	—	—	—	—	—
310M R4	400	140	260	137.5	24	6	158	38	7	—	—	—	—	—	—

	P71		P80		P90		P100		P112		P132		P160		P180		P200		P225	
	E	P	E	P	E	P	E	P	E	P	E	P	E	P	E	P	E	P	E	P
310M R2 (B)	—	—	—	—	—	—	—	—	—	—	—	—	—	—	152	350	182	400	212	450
310M R2 (C)	—	—	—	—	—	—	—	—	—	—	114	300	152	350	152	350	182	400	212	450
310M R3	65	160	84	200	84	200	94	250	94	250	114	300	144	350	—	—	—	—	—	—
310M R4	65	160	84	200	84	200	94	250	94	250	114	300	144	350	—	—	—	—	—	—

310M VK

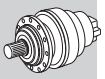

Metric

The diagram below allows the calculation of permitted overhung load R_{x2} on the output shaft of gearbox, with radial force applying at a distance x from shaft shoulder.
The curves are relevant to value resulting from the relationship of trust load A_{n2} to radial load R_{n2}, based on n_2 = 10 rpm and 10000 hrs theoretical lifetime.

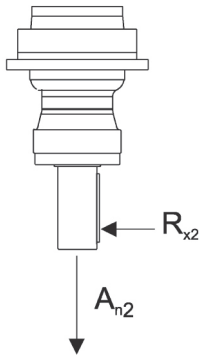

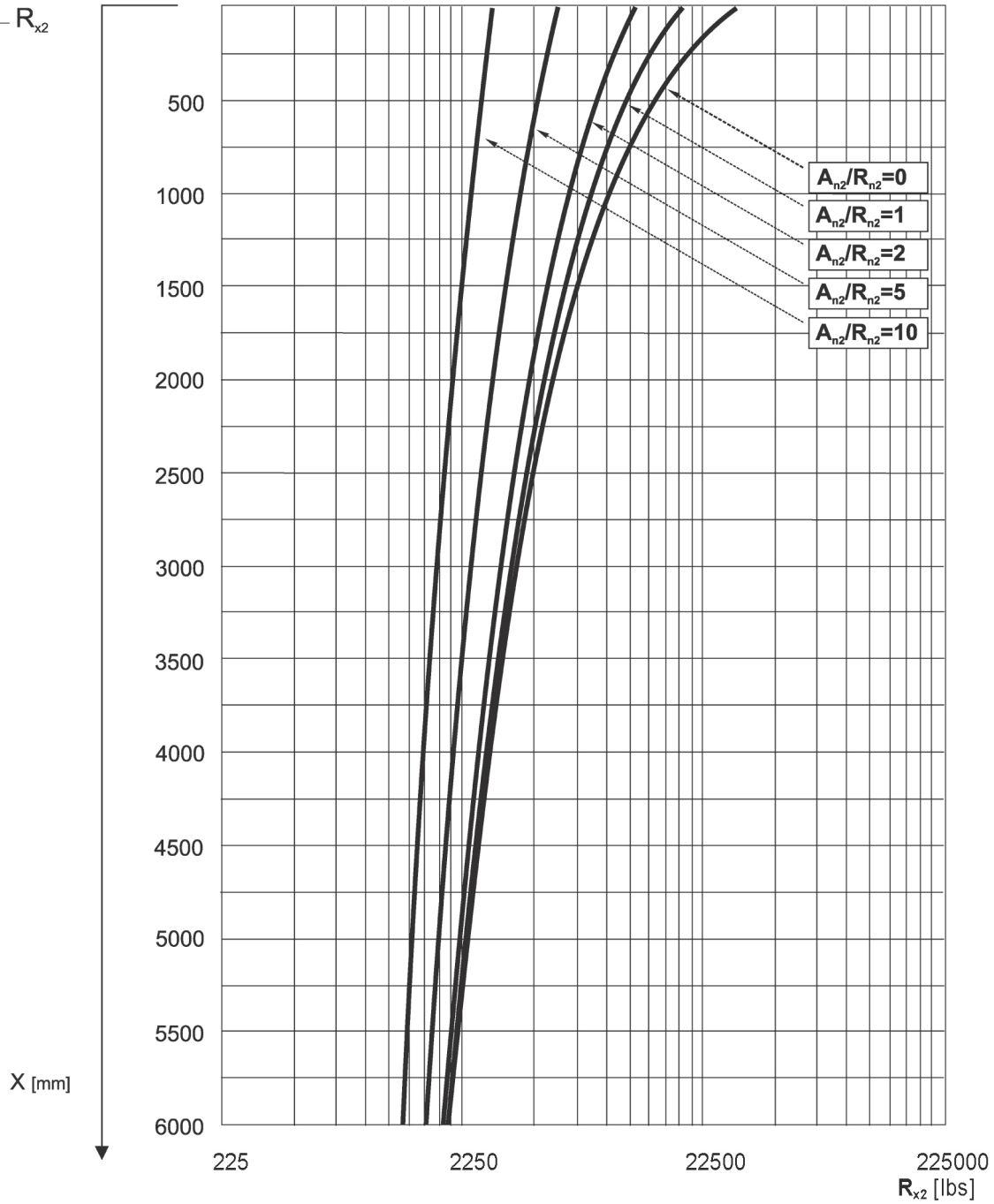

311M L

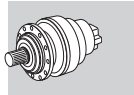

Metric

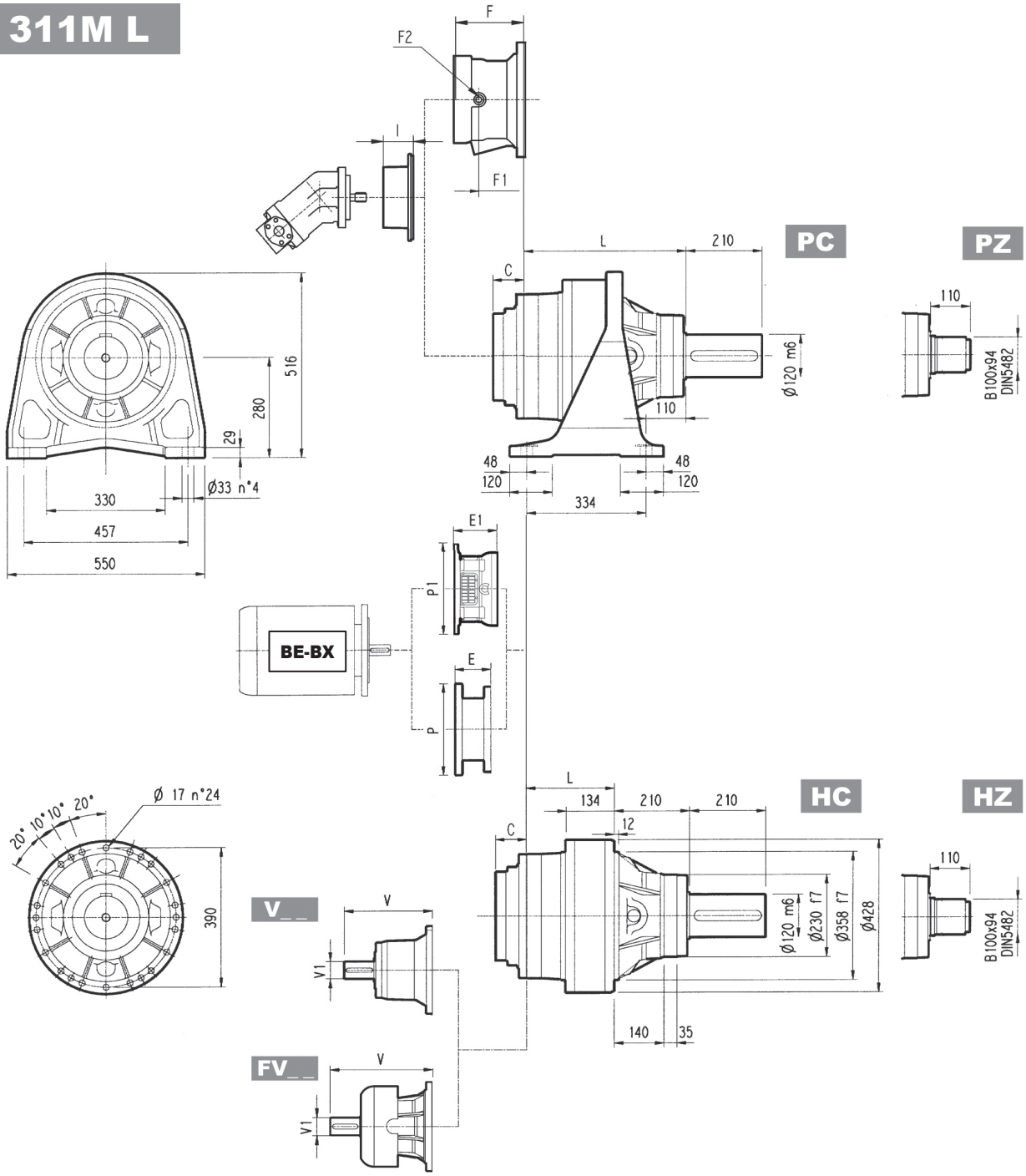

Dimensions are in mm

	L				Kg			
	PC - PZ	HC - HZ	FZ - FZP	FP	PC - PZ	HC - HZ	FZ - FZP	FP
311M L1	325	115	115	115	250	180	160	170
311M L2	458	248	248	248	295	225	205	215
311M L3	547	337	337	337	307	237	217	227
311M L4	612	402	402	402	314	244	224	234

	V	V1	Kg	V	V1	Kg	V	V1	Kg	V	V1	Kg	C	Input	I	F	F1	F2	Type	Input	Kg
311M L1	348	80	55	—	—	—	456	80	85	—	—	—	81	D		—	—	—	—	—	—
311M L2	315	80	35	313	60	28	375	80	48	363	60	34	51	B		201	153	1/4 G	6	B	28
311M L3	239	48	15	—	—	—	276	48	17	—	—	—	37	A		145	95	1/4 G	5	A	16
311M L4	137.5	24	6	158	38	7	—	—	—	—	—	—	37	A	532	105	65	1/4 G	4	A	10

311M L

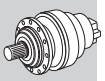

Metric

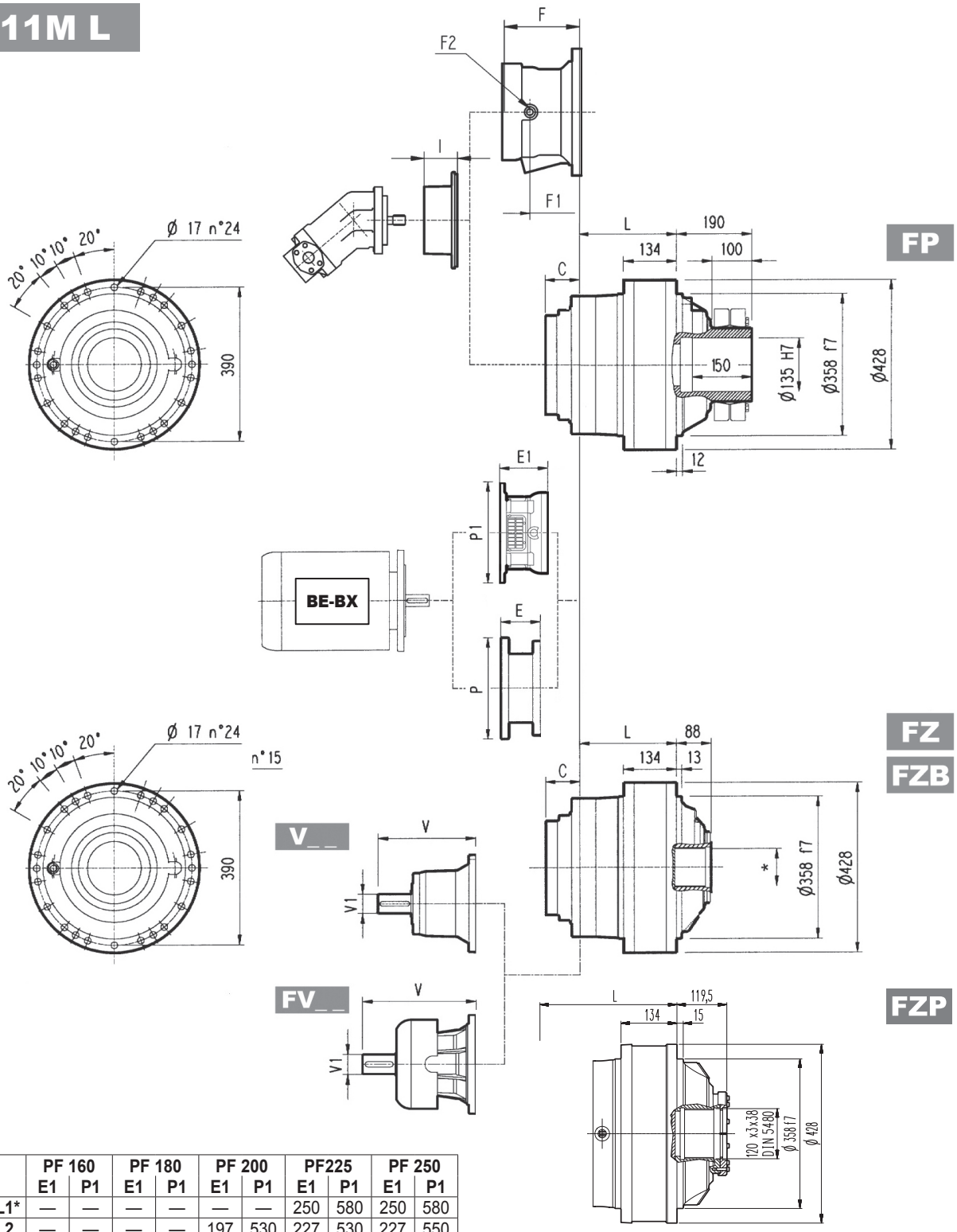

	PF 160		PF 180		PF 200		PF225		PF 250	
	E1	P1	E1	P1	E1	P1	E1	P1	E1	P1
311M L1*	—	—	—	—	—	—	250	580	250	580
311M L2	—	—	—	—	197	530	227	530	227	550
311M L3	165	400	165	400	195	400	195	450	—	—
311M L4	165	400	165	400	—	—	—	—	—	—

(*): for PC-PZ versions contact Bonfiglioli Technical Service
NOTE: For R design contact Bonfiglioli Technical service

FZB	**T_{2max} = 592,110 lb•in**
FP	**T_{2max} = 486,790 lb•in**

Dimensions are in mm

* For dimensions refer to page 392

	P71		P80		P90		P100		P112		P132		P160		P180		P200		P225		P250	
	E	P	E	P	E	P	E	P	E	P	E	P	E	P	E	P	E	P	E	P	E	P
311M L1	—	—	—	—	—	—	—	—	—	—	—	—	—	—	—	—	267	400	297	450	297	550
311M L2	—	—	—	—	—	—	—	—	—	—	—	—	—	—	195	350	186	400	216	450	216	550
311M L3	—	—	—	—	—	—	—	—	—	—	114	300	144	350	144	350	174	400	—	—	—	—
311M L4	65	160	84	200	84	200	94	250	94	250	114	300	144	350	—	—	—	—	—	—	—	—

Bonfiglioli Riduttori

311M R

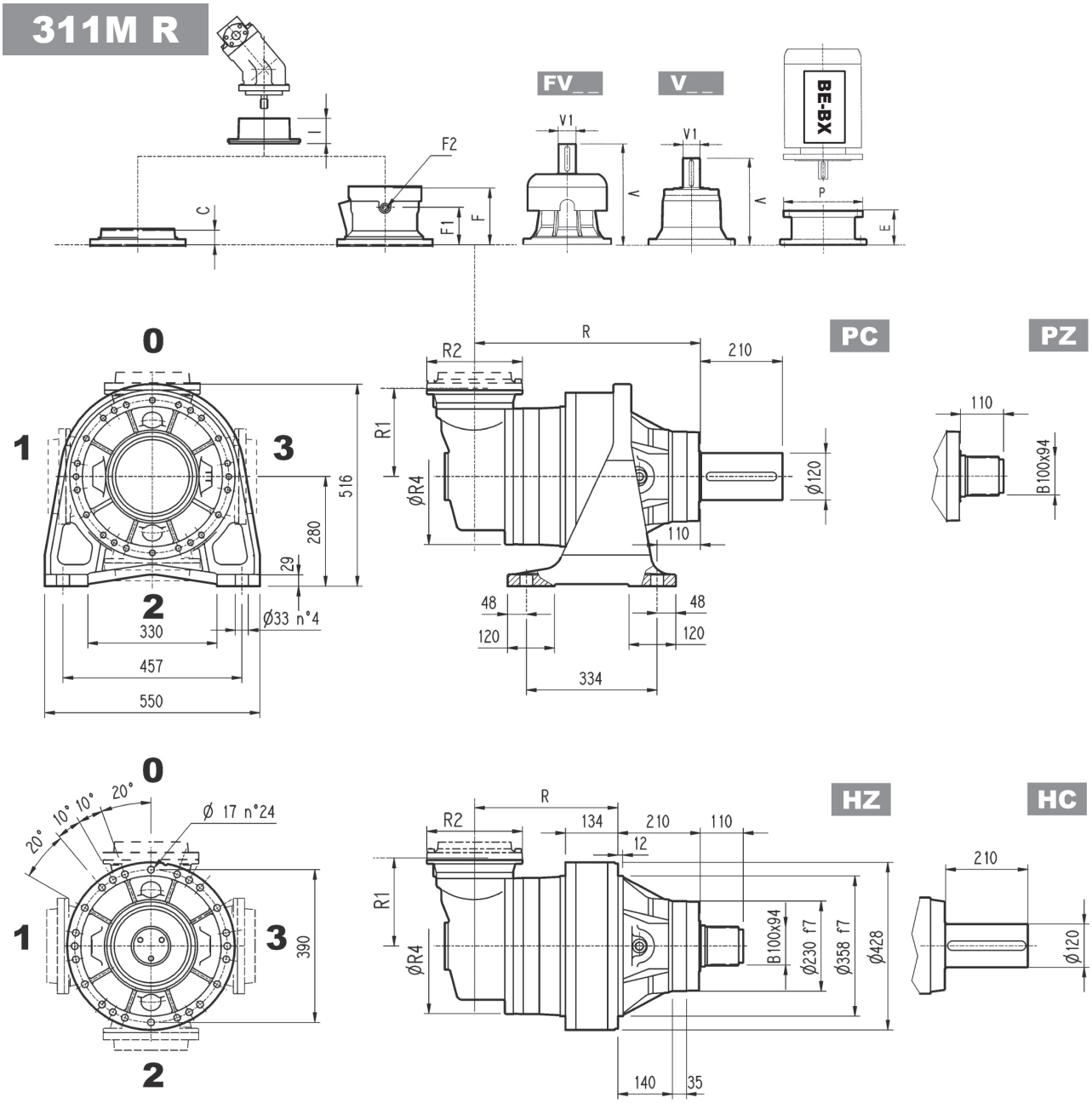

Dimensions are in mm

	R				R1	R2	R4	Kg			
	PC-PZ	HC-HZ	FZ - FZP	FP				PC-PZ	HC-HZ	FZ - FZP	FP
311M R2 (B)	550	340	340	340	345	292	400	380	310	290	300
311M R2 (C)	550	340	340	340	390	292	480	390	320	300	310
311M R3	577	367	367	367	225	245	375	345	275	255	265
311M R4	639	429	429	429	140	186	244	327	257	237	247

	V	V1	Kg	V	V1	Kg	V	V1	Kg	V	V1	Kg	C	Input	I	F	F1	F2	Type	Input	Kg
311M R2 (B)	307	60	23	—	—	—	357	60	28	—	—	—	45	B	532	195	147	1/4 G	6	B	28
311M R2 (C)	307	60	23	—	—	—	357	60	28	—	—	—	45	B		195	147	1/4 G	6	B	28
311M R3	239	48	15	—	—	—	276	48	17	—	—	—	37	A		145	95	1/4 G	5	A	16
311M R4	137.5	24	6	158	38	7	—	—	—	—	—	—	37	A		105	65	1/4 G	4	A	10

311M R

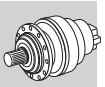

Metric

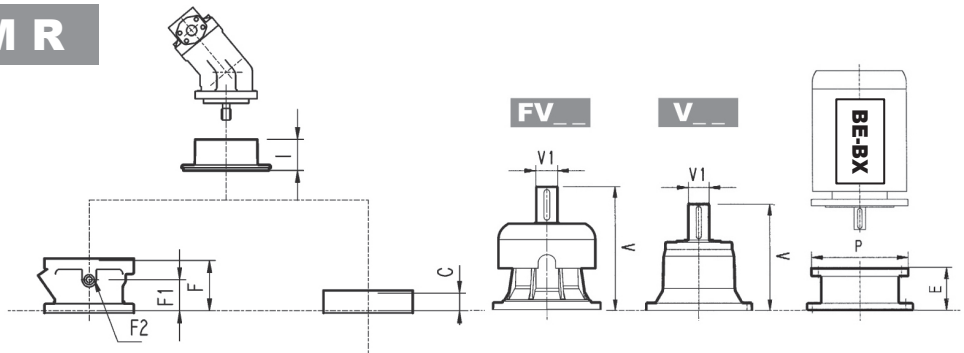

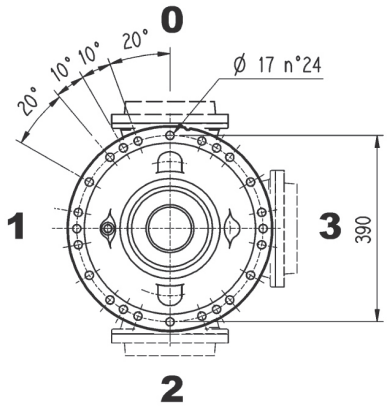

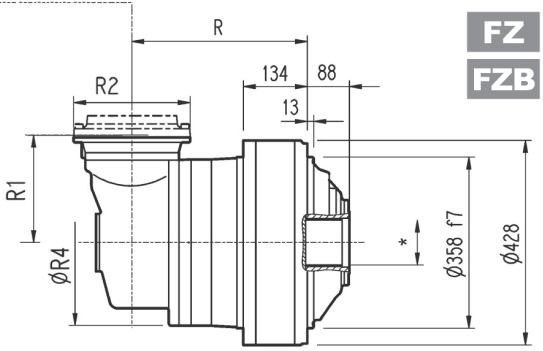

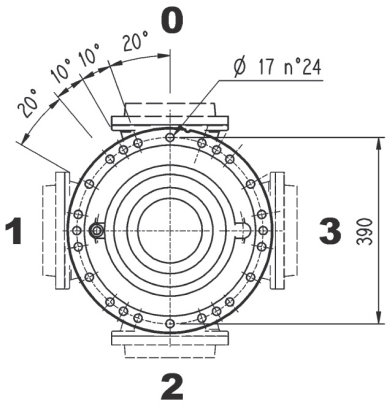

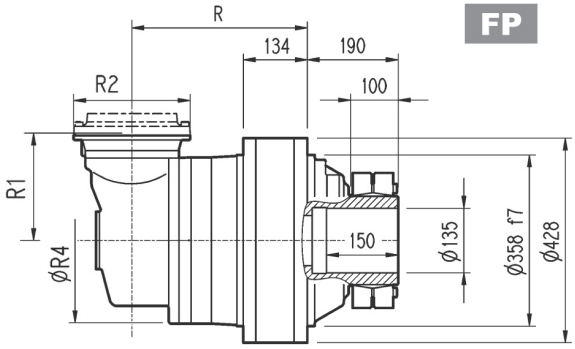

Only for configuration:

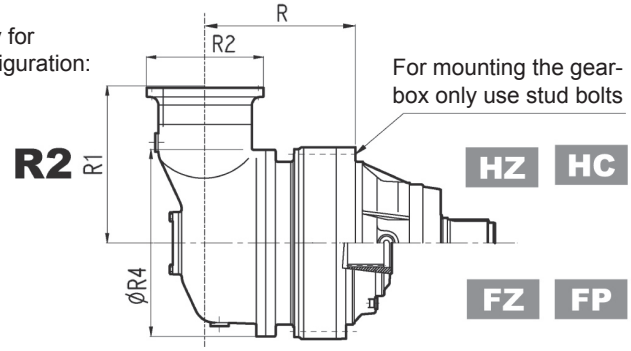

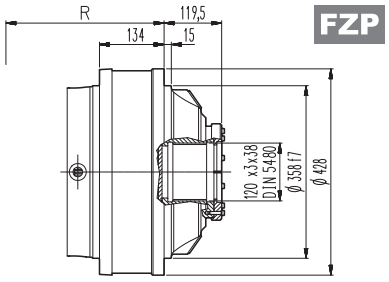

FZB	T_{2max} = 592,110 lb•in	FP	T_{2max} = 486,790 lb•in

Dimensions are in mm

* For dimensions refer to page 392

	P71		P80		P90		P100		P112		P132		P160		P180		P200		P225		P250	
	E	P	E	P	E	P	E	P	E	P	E	P	E	P	E	P	E	P	E	P	E	P
311M R2 (B)	—	—	—	—	—	—	—	—	—	—	—	—	—	—	152	350	182	400	212	450	193	550
311M R2 (C)	—	—	—	—	—	—	—	—	—	—	—	—	—	—	152	350	182	400	212	450	193	550
311M R3	—	—	—	—	—	—	—	—	—	—	114	300	144	350	144	350	174	400	—	—	—	—
311M R4	65	160	84	200	84	200	94	250	94	250	114	300	144	350	—	—	—	—	—	—	—	—

311M L

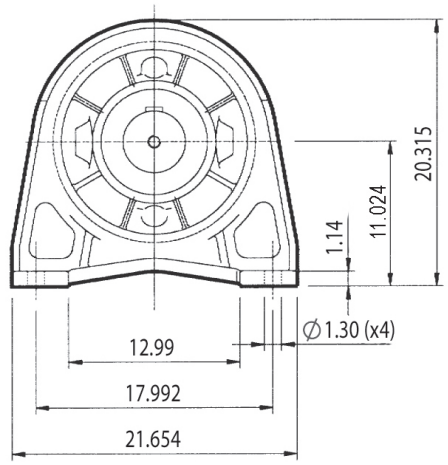

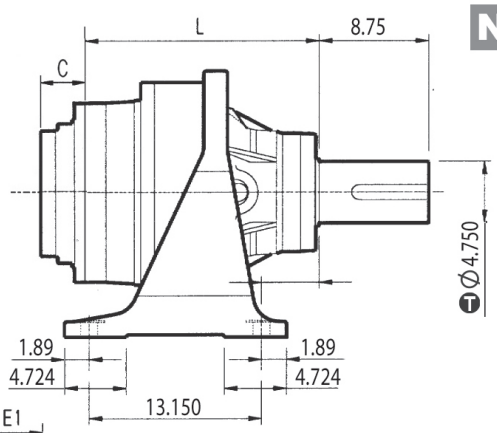

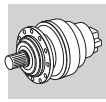

Imperial

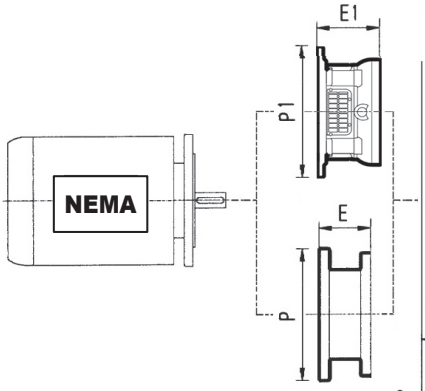

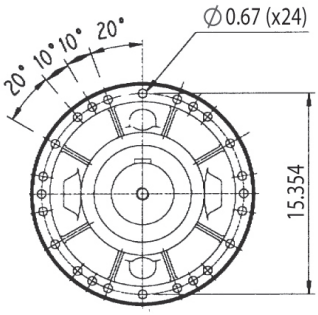

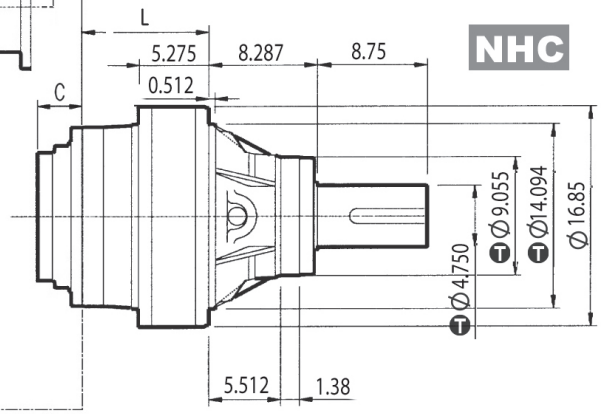

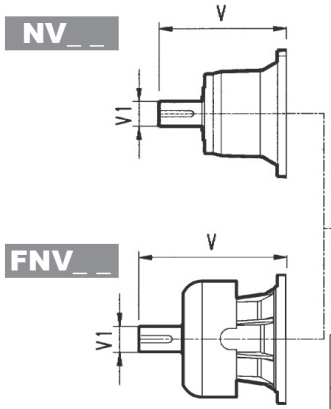

	PF N250TC		PF N280TC		PF N320TC		PF N360TC	
	E1	P1	E1	P1	E1	P1	E1	P1
311M L1*	—	—	—	—	—	—	12.402	22.835
311M L2	—	—	6.496	15.748	9.921	20.866	11.496	20.866
311M L3	8.661	15.748	8.661	15.748	9.843	15.748	10.236	17.717
311M L4	8.661	15.748	8.661	15.748	—	—	—	—

(*) : for NPC version contact Bonfiglioli technical service
NOTE: for R design contact Bonfiglioli Technical Service
for PF N400TC contact Bonfiglioli Technical Service

inch	T
14.094	-0.00244 -0.00469
9.055	-0.00197 -0.00378
4.750	+0.00157 +0.00059

Dimensions are in Inch except when shown in *italic [mm]*

	L		lbs	
	NPC	NHC	NPC	NHC
311M L1	12.795	4.528	551.3	396.9
311M L2	18.031	9.764	650.5	496.1
311M L3	21.535	13.268	676.9	522.6
311M L4	24.094	15.827	692.4	538.0

	V	V1	lbs	V	V1	lbs	V	V1	lbs	V	V1	lbs	C	Input
311M L1	13.563	3.000	121.3	—	—	—	—	—	—	17.835	3.000	140.0	3.189	D
311M L2	13.130	2.375	29.8	12.283	3.000	77.2	14.646	3.000	90.0	15.104	2.375	38.0	2.008	B
311M L3	9.681	1.875	33.1	—	—	—	—	—	—	11.138	1.875	38.0	1.457	A
311M L4	5.996	1.125	13.2	6.437	1.625	15.4	—	—	—	—	—	—	1.457	A

	N56C		N140TC		N180TC		N210TC		N250TC		N280TC		N320TC		N360TC	
	E	P	E	P	E	P	E	P	E	P	E	P	E	P	E	P
311M L2	—	—	—	—	—	—	—	—	—	—	—	—	7.776	15.748	7.776	15.748
311M L3	—	—	—	—	—	—	—	—	5.216	11.811	6.221	13.780	—	—	—	—
311M L4	4.508	6.693	4.508	6.693	5.216	8.819	5.216	8.819	5.216	8.819	6.122	11.811	—	—	—	—

311M R

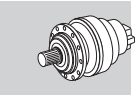

Imperial

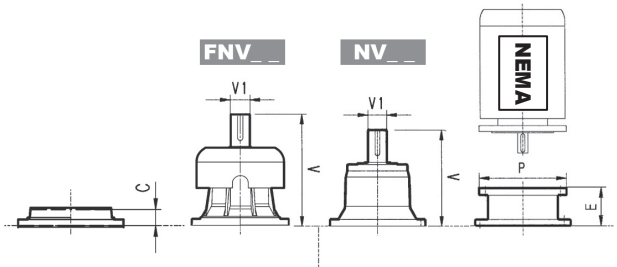

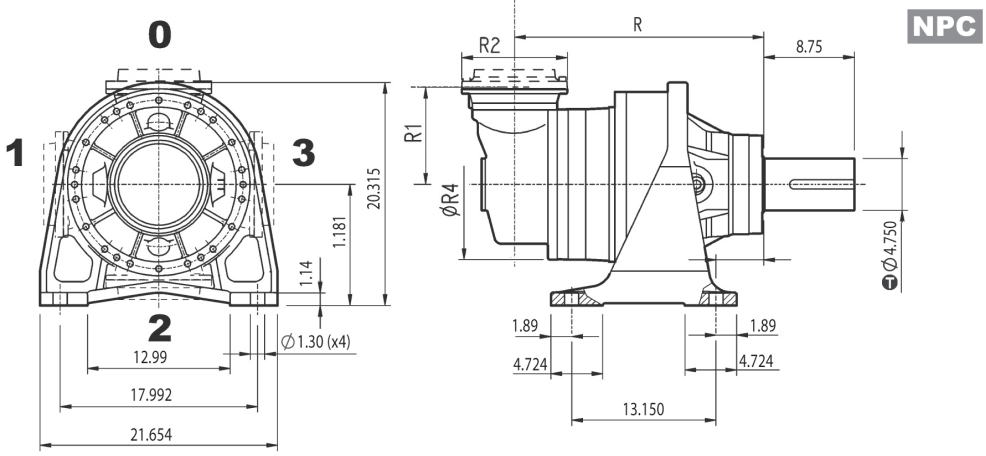

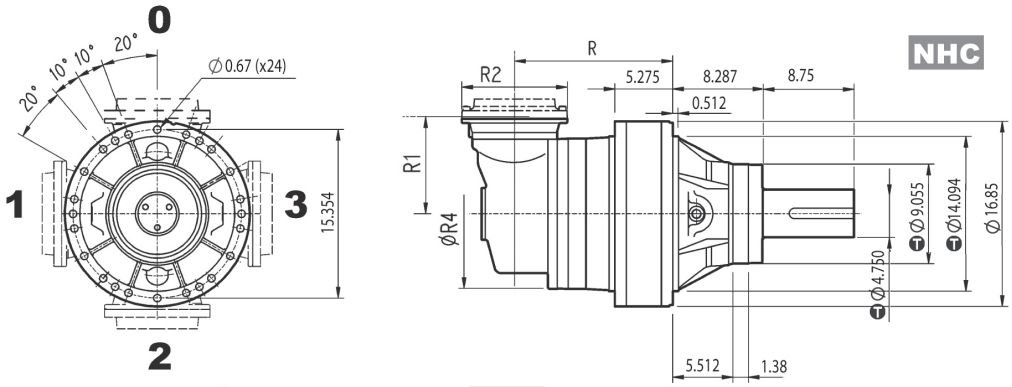

Only for configuration:

R2

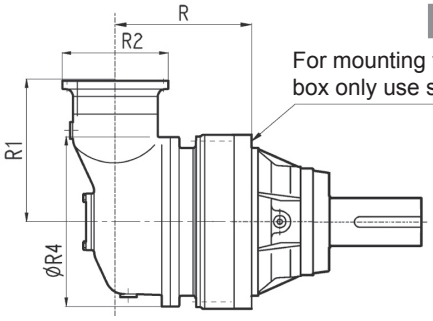

For mounting the gear-box only use stud bolts

inch	T
14.094	-0.00244 -0.00469
9.055	-0.00197 -0.00378
4.750	+0.00157 +0.00059

Dimensions are in Inch except when shown in *italic [mm]*

	R		R1	R2	R4	lbs	
	NPC	NHC				NPC	NHC
311M R2 (B)	21.654	13.386	13.583	11.496	15.748	837.9	705.6
311M R2 (C)	21.654	13.386	15.354	11.496	18.898	860.0	606.4
311M R3	22.717	14.449	8.858	9.646	14.764	760.7	606.4
311M R4	25.157	16.890	5.512	7.323	9.606	721.0	566.7

	V	V1	lbs	V	V1	lbs	V	V1	lbs	C	Input
311M R2 (B)	12.703	2.375	50.7	—	—	—	14.652	2.375	58.0	1.772	B
311M R2 (C)	12.703	2.375	50.7	—	—	—	14.652	2.375	58.0	1.772	B
311M R3	9.681	1.875	33.1	—	—	—	11.138	1.875	38.0	1.457	A
311M R4	5.996	1.125	13.2	6.437	1.625	15.4	—	—	—	1.457	A

	N56C		N140TC		N180TC		N210TC		N250TC		N280TC		N320TC		N360TC	
	E	P	E	P	E	P	E	P	E	P	E	P	E	P	E	P
311M R2 (B)	—	—	—	—	—	—	—	—	—	—	—	—	7.776	13.780	7.776	13.780
311M R2 (C)	—	—	—	—	—	—	—	—	—	—	—	—	7.776	13.780	7.776	13.780
311M R3	—	—	—	—	—	—	—	—	5.216	11.811	6.221	13.780	—	—	—	—
311M R4	4.508	6.693	4.508	6.693	5.216	8.819	5.216	8.819	5.216	8.819	6.122	11.811	—	—	—	—

Bonfiglioli Riduttori

3/V 11M L3

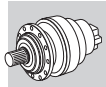

Metric

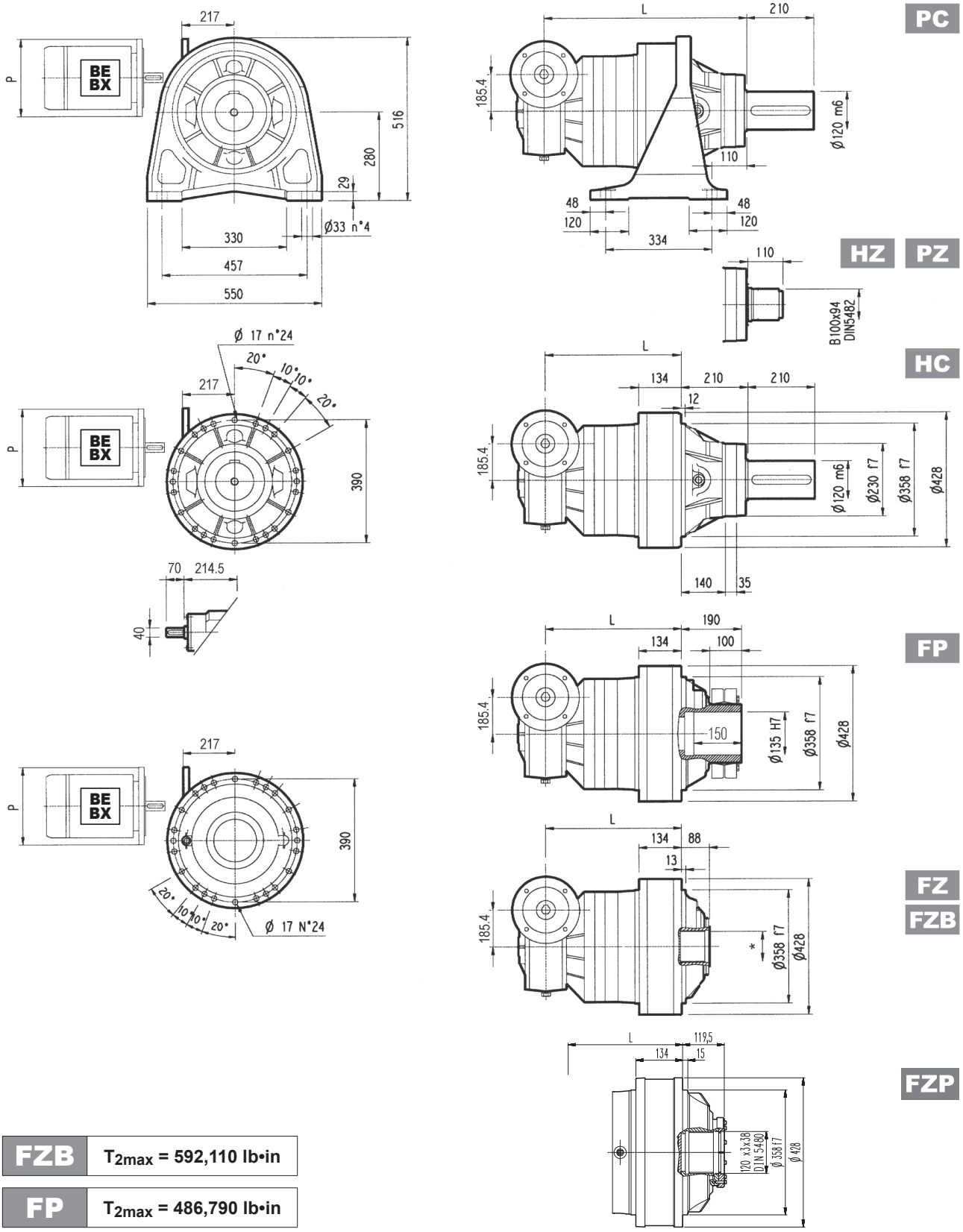

FZB	**T_{2max} = 592,110 lb•in**
FP	**T_{2max} = 486,790 lb•in**

Dimensions are in mm

* For dimensions refer to page 392

	L				Kg				P80	P90	P100	P112	P132	P160	P180
	PC - PZ	HC - HZ	FZ - FZP	FP	PC - PZ	HC - HZ	FZ - FZP	FP	P	P	P	P	P	P	P
3/V 11M L3	659	449	449	449	390	320	300	310	—	—	250	250	300	350	350

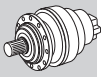

3/V 11M L4

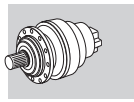

Metric

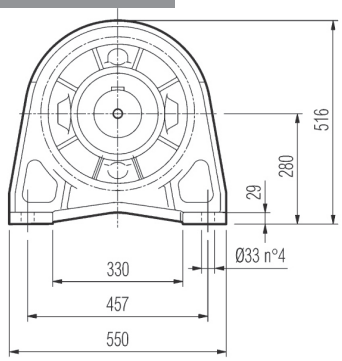

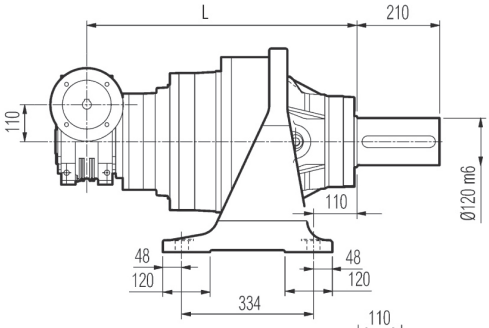

PC

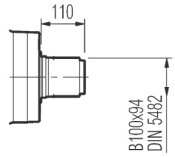

HZ PZ

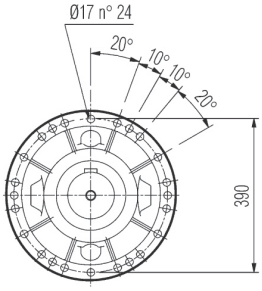

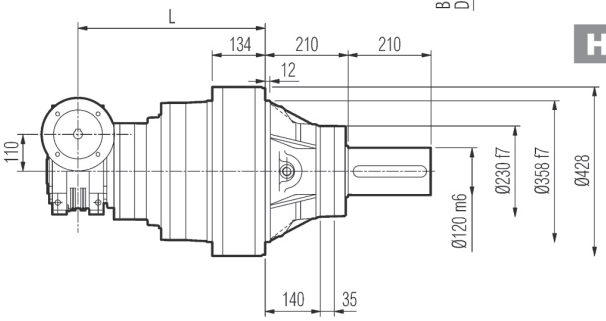

HC

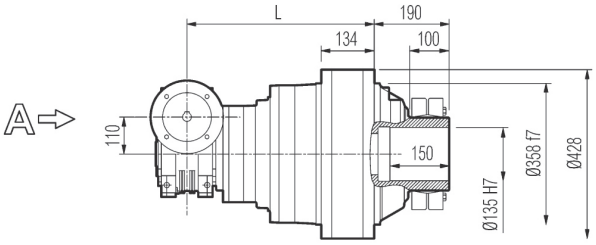

FP

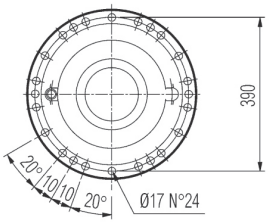

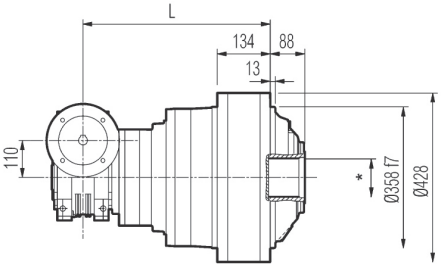

FZ
FZB

FZP

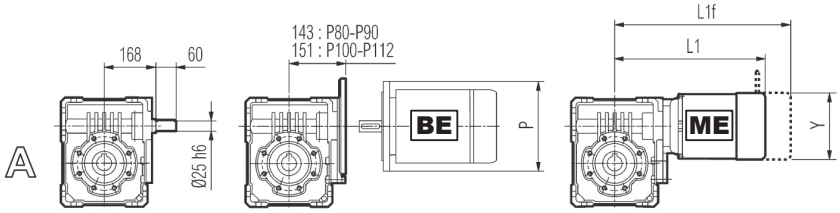

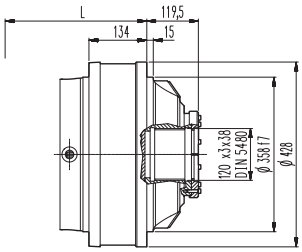

FZB	T_{2max} = 592,110 lb•in

FP	T_{2max} = 486,790 lb•in

Dimensions are in mm

* For dimensions refer to page 392

	L				Kg			
	PC - PZ	HC - HZ	FZ - FZP	FP	PC - PZ	HC - HZ	FZ - FZP	FP
3/V 11M L4	707	497	497	497	340	270	250	260

	P80	P90	P100	P112	S2 + ME2S			S3 + ME3S			S3 + ME3L		
	P	P	P	P	L1	L1f	Y	L1	L1f	Y	L1	L1f	Y
3/V 11M L4	200	200	250	250	364	—	156	407	—	193	439	—	193

3/V 11M L4

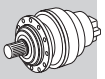

Imperial

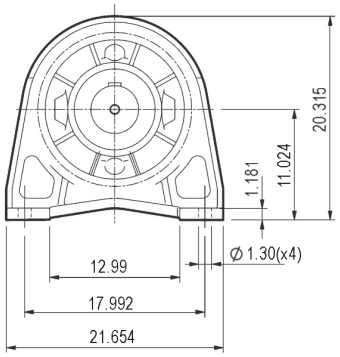

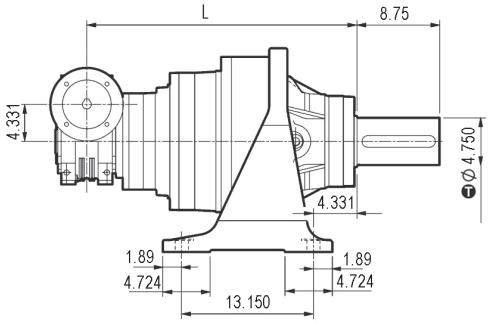

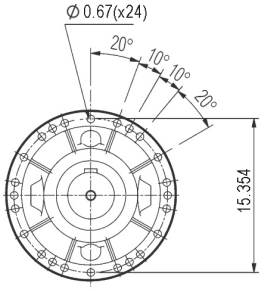

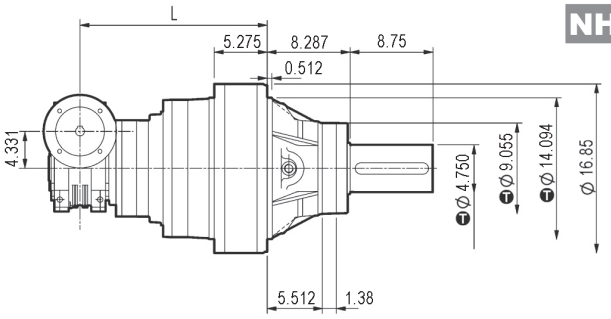

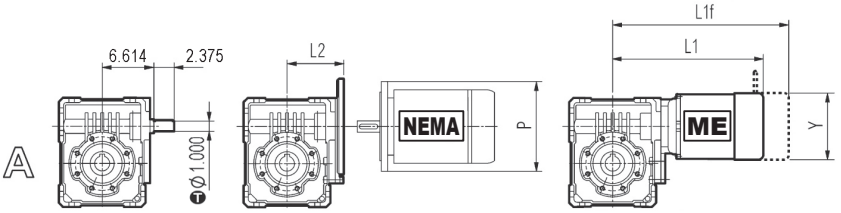

inch	T
14.094	-0.00244 -0.00469
9.055	-0.00197 -0.00378
4.750	+0.00157 +0.00059

Dimensions are in Inch except when shown in *italic [mm]*

	L		lbs		N140TC		N180TC		N210TC	
	NPC	NHC	NPC	NHC	L2	P	L2	P	L2	P
3/V 11M L4	27.835	19.567	749.7	595.4	5.866	6.535	6.280	9.016	8.780	9.016

	S2 + ME2S			S3 + ME3S			S3 + ME3L		
	L1	L1f	Y	L1	L1f	Y	L1	L1f	Y
3/V 11M L4	14.331	—	6.142	16.024	—	7.598	17.283	—	7.598

Bonfiglioli Riduttori

311M L 311M R 3/V 11M L

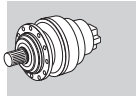

Metric

Imperial

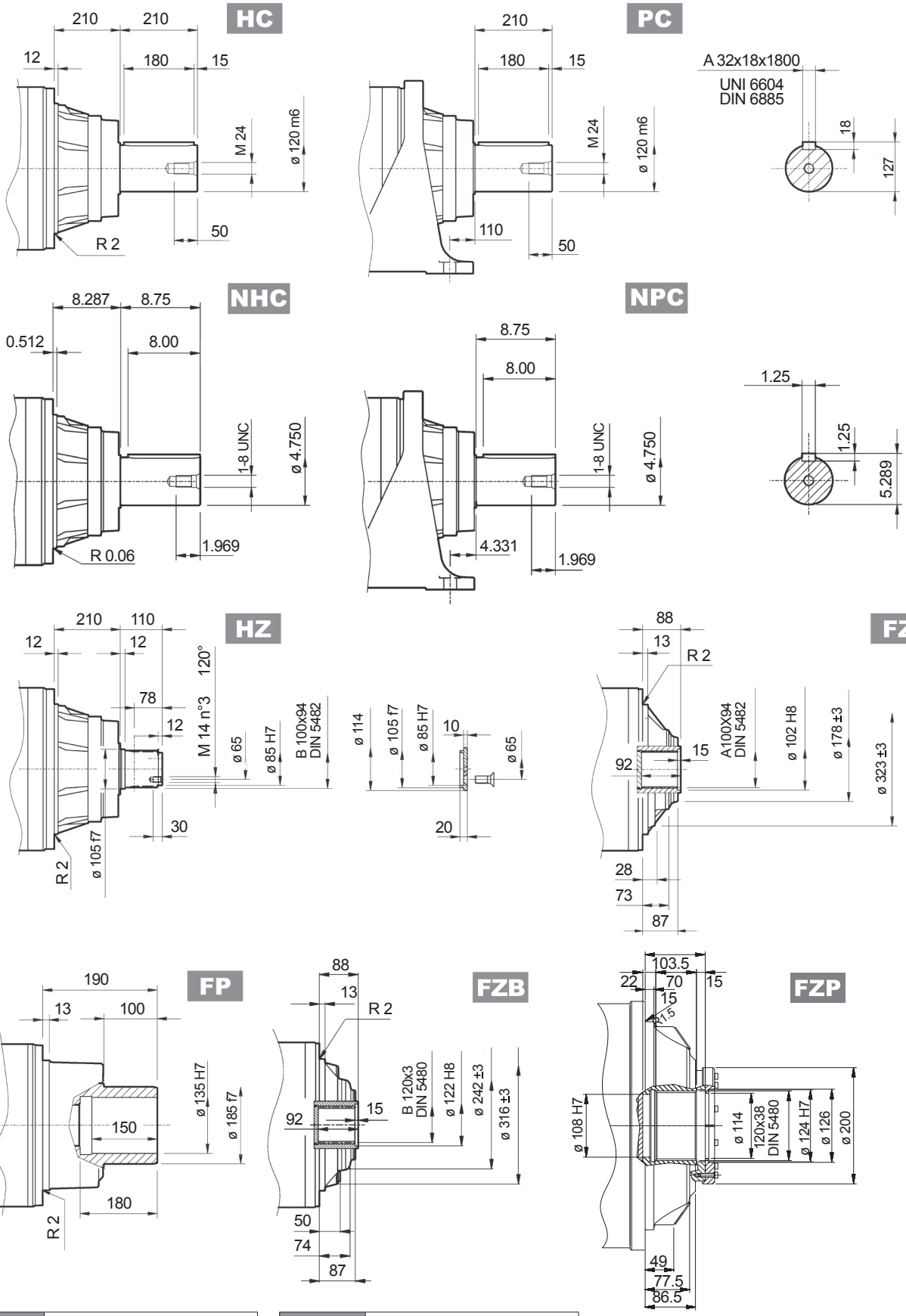

FZB	T_{2max} = 592,110 lb•in

FP	T_{2max} = 486,790 lb•in

inch	T
4.750	+0.00157 +0.00059

Dimensions are in mm when shown in italic, otherwise dimensions are in inches

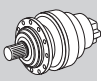

Flange

W0A

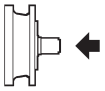

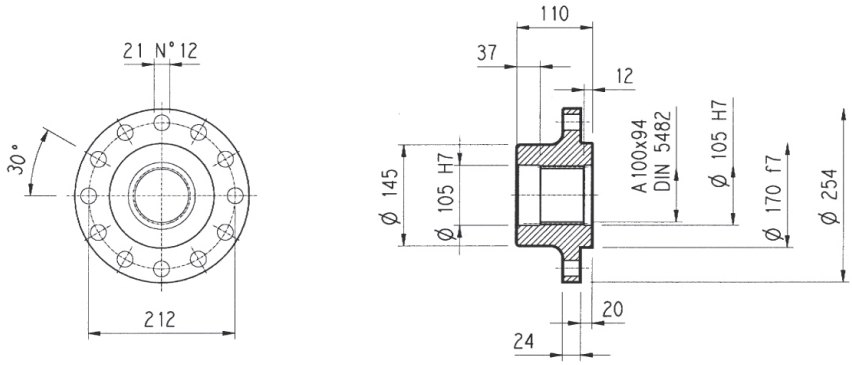

Material: Steel C40

Dimensions are in mm

Pinions

P...

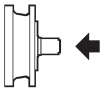

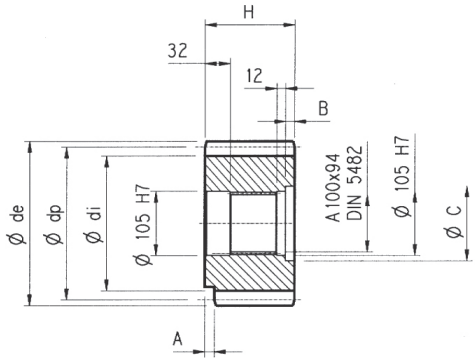

Dimensions are in mm

α = 20°

	m	z	x	dp	di	de	H	A	B	C	Material
PLQ	12	23	—	276	246	300	110	—	—	—	Steel 18NiCrMo5 case hardened
PPD	16	13	0.500	208	184	252.5	145	—	35	116	Steel 39NiCrMo3 hardened and tempered
PPF	16	15	0.450	240	215	280	125	—	15	120	

Sleeve coupling

M0A

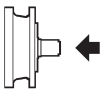

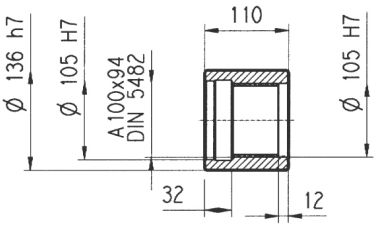

Material: Steel 16CrNi4

Dimensions are in mm

Splined bars

B0A

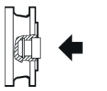

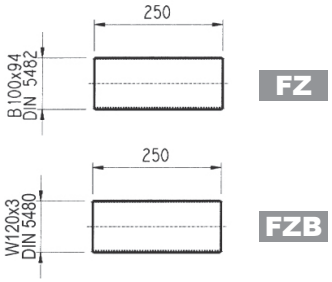

Material: Case hardening steel 18NiCrMo5 UNI 5331
must be case hardened 50-55 HRC

Shrink disc

G0A

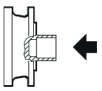

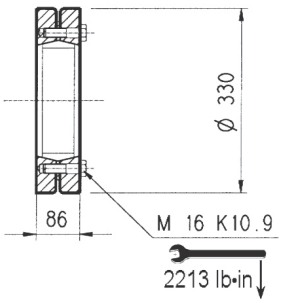

Dimensions are in mm

311M L 311M R

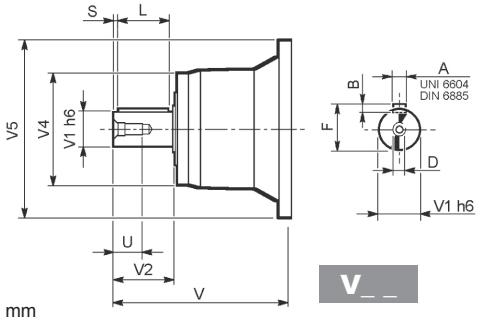

V_ _

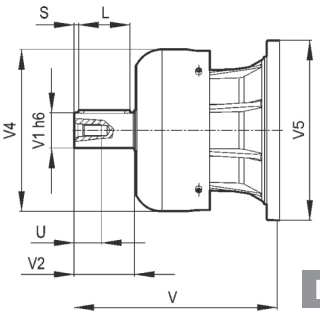

FV_ _

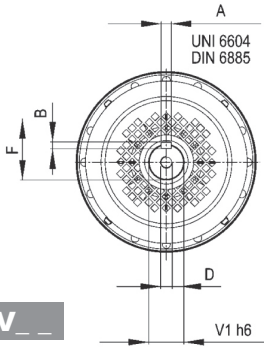

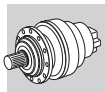

Metric

Dimensions are in mm

		V	V1	V2	V4	V5	A	B	F	L	S	D	U
311M L1	**V11B**	348	80	130	200	428	22	14	85	110	10	M16	36
	FV11B	456	80	130	347.5	428	22	14	85	110	10	M16	36
311M L2	**V07B**	315	80	130	200	345	22	14	85	110	10	M16	36
	FV07B	375	80	130	347.5	348	22	14	85	110	10	M16	36
	V07A	313	60	105	155	345	18	11	64	90	7.5	M16	36
	FV07A	363	60	105	309	348	18	11	64	90	7.5	M16	36
311M L3	**V05B**	239	48	82	155	245	14	9	51.5	70	6	M16	36
	FV05B	276	48	82	219.5	244	14	9	51.5	70	6	M16	36
311M L4	**V01A**	137.5	24	36	120	186	8	7	27	30	3	M8	19
	V01B	158	38	58	120	186	10	8	41	50	4	M12	28
311M R2 (B)(C)	**V06B**	307	60	105	155	292	18	11	64	90	7.5	M16	36
	FV06B	357	60	105	309	292	18	11	64	90	7.5	M16	36
311M R3	**V05B**	239	48	82	155	245	14	9	51.5	70	6	M16	36
	FV05B	276	48	82	219.5	244	14	9	51.5	70	6	M16	36
311M R4	**V01A**	137.5	24	36	120	186	8	7	27	30	3	M8	19
	V01B	158	38	58	120	186	10	8	41	50	4	M12	28

311M L 311M R

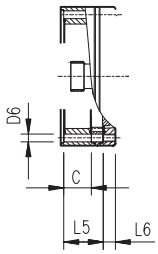

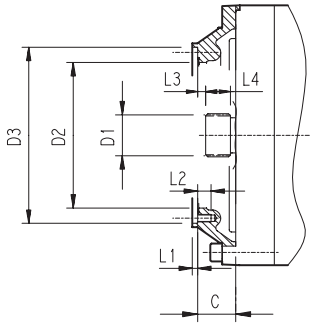

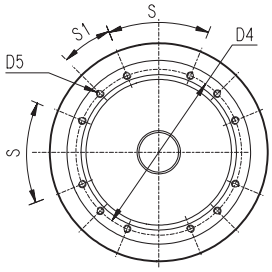

Dimensions are in mm

		C	D1	D2	D3	D4	D5	D6	L1	L2	L3	L4	L5	L6	S	S1	Input
311M L1	**V9AD**	81	80x74 DIN 5482	270	335 H7	314	M16 n°8	—	5	30	8.5	40	—	—	60°	30°	D
311M L2	**V9AB**	51	58x53 DIN 5482	195	236 H7	222	M10 n°12	—	4	18	11	22	—	—	45°	22.5°	B
311M L3	**V9AA**	37	40x36 DIN 5482	140	178 H7	165	M10 n°8	—	4	18	9	18	—	—	45°	45°	A
311M L4	**V9AA**	37	40x36 DIN 5482	140	178 H7	165	M10 n°8	11	4	—	9	18	65	18	45°	45°	A
311M R3	**V9AA**	37	40x36 DIN 5482	140	178 H7	165	M10 n°8	11	4	18	9	18	—	—	45°	45°	A
311M R2 (B) (C)	**V9AB**	45	58x53 DIN 5482	195	236 H7	222	M10 n°12	—	4	18	11	22	—	—	45°	22.5°	B
311M R4	**V9AA**	37	40x36 DIN 5482	140	178 H7	165	M10 n°8	11	4	—	9	18	37	18	45°	45°	A

3/V 11M L

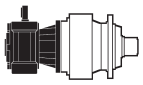

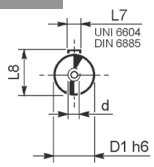

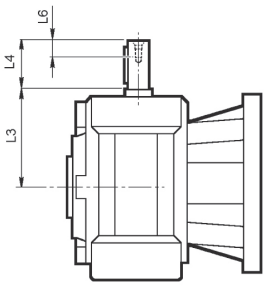

Dimensions are in mm

	D1 h6	L3	L4	L6	L7	L8	d
3/V 11M L3_HS	40	214.5	70	20	12	43	M8
3/V 11M L4_HS	25	168	60	19	8	28	M8

311M L 311M R

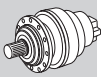

inch	T
3.000	0 -0.00075
2.375	0 -0.00053
1.875	0 -0.00053
1.625	0 -0.00053
1.125	0 -0.00051

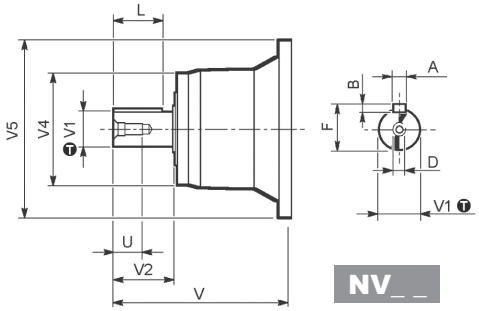

NV_ _

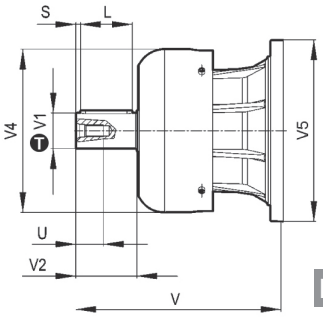

FNV_ _

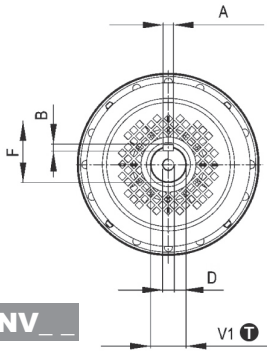

Dimensions are in Inch except when shown in *italic [mm]*

		V	V1	V2	V4	V5	A	B	F	L	D	U
311M L1	**NV11B**	13.563	3.000	5.000	8.160	16.850	0.750	0.750	3.328	4.374	3/4-10 UNC	1.654
	FNV11B	17.835	3.000	5.000	13.678	16.850	0.750	0.750	3.328	4.374	3/4-10 UNC	1.654
311M L2	**NV07A**	13.130	2.375	4.750	6.024	13.700	0.625	0.625	2.645	4.250	3/4-10 UNC	1.654
	FNV07A	15.104	2.375	4.750	6.811	13.700	0.625	0.625	2.645	4.250	3/4-10 UNC	1.654
	NV07B	12.283	3.000	5.000	7.165	13.699	0.750	0.750	3.328	4.374	3/4-10 UNC	1.654
	FNV07B	14.646	3.000	5.000	13.677	13.699	0.750	0.750	3.328	4.374	3/4-10 UNC	1.654
311M L3	**NV05B**	9.681	1.875	3.500	6.417	9.606	0.500	0.500	2.091	3.000	5/8-11 UNC	1.417
	FNV05B	11.138	1.875	3.500	8.641	9.606	0.500	0.500	2.091	3.000	5/8-11 UNC	1.417
311M L4	**NV01A**	5.996	1.125	2.000	4.980	7.323	0.250	0.250	1.236	1.752	3/8-16 UNC	0.866
	NV01B	6.437	1.625	2.500	4.980	7.323	0.375	0.375	1.791	2.000	1/2-13 UNC	1.102
311M R2 (B)(C)	**NV06B**	12.703	2.375	4.750	6.417	11.496	0.625	0.625	2.646	4.252	3/4-10 UNC	1.654
	FNV06B	14.652	2.375	4.750	12.165	11.496	0.625	0.625	2.646	4.252	3/4-10 UNC	1.654
311M R3	**NV05B**	9.681	1.875	3.500	6.417	9.606	0.500	0.500	2.091	3.000	5/8-11 UNC	1.417
	FNV05B	11.138	1.875	3.500	8.641	9.606	0.500	0.500	2.091	3.000	5/8-11 UNC	1.417
311M R4	**NV01A**	5.996	1.125	2.000	4.980	7.323	0.250	0.250	1.236	1.752	3/8-16 UNC	0.866
	NV01B	6.437	1.625	2.500	4.980	7.323	0.375	0.375	1.791	2.000	1/2-13 UNC	1.102

311M L 311M R

inch	T
13.19	+0.00224 0
9.29	+0.00181 0
7.01	+0.00157 0

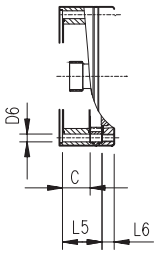

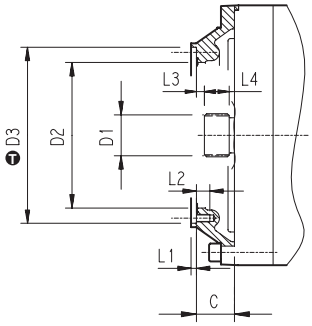

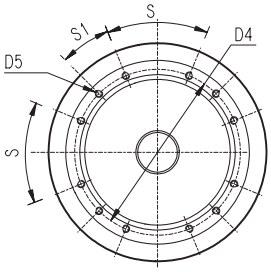

Dimensions are in Inch except when shown in *italic [mm]*

		C	D1	D2	D3	D4	D5	D6	L1	L2	L3	L4	L5	L6	S	S1	Input
311M L1	**V9AD**	3.19	*80x74 DIN 5482*	10.63	13.19	12.36	*M16 n°8*	—	0.20	1.18	0.33	1.57	—	—	60°	30°	D
311M L2	**V9AB**	2.01	*58x53 DIN 5482*	7.68	9.29	8.74	*M10 n°12*	—	0.16	0.71	0.43	0.87	—	—	45°	22.5°	B
311M L3	**V9AA**	1.46	*40x36 DIN 5482*	5.51	7.01	6.50	*M10 n°8*	—	0.16	0.71	0.35	0.71	—	—	45°	45°	A
311M L4	**V9AA**	1.46	*40x36 DIN 5482*	5.51	7.01	6.50	*M10 n°8*	0.43	0.16	—	0.35	0.71	2.56	0.71	45°	45°	A
311M R3	**V9AA**	1.46	*40x36 DIN 5482*	5.51	7.01	6.50	*M10 n°8*	0.43	0.16	0.71	0.35	0.71	—	—	45°	45°	A
311M R2 (B) (C)	**V9AB**	1.77	*58x53 DIN 5482*	7.68	9.29	8.74	*M10 n°12*	—	0.16	0.71	0.43	0.87	—	—	45°	22.5°	B
311M R4	**V9AA**	1.46	*40x36 DIN 5482*	5.51	7.01	6.50	*M10 n°8*	0.43	0.16	—	0.35	0.71	1.46	0.71	45°	45°	A

3/V 11M L

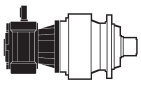

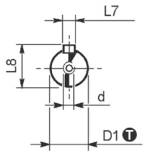

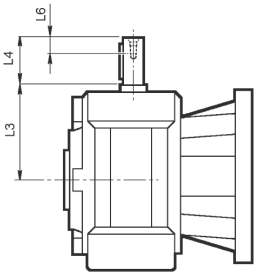

inch	T
1.000	0 -0.00051

Dimensions are in Inch except when shown in *italic [mm]*

	D1	L3	L4	L6	L7	L8	d
3/V 11M L4_NHS	1.000	11.89	1.969	0.75	0.250	1.109	3/8-16UNC

Permissible radial and axial loads on output shaft with $Fh_2 : n_2 \cdot h = 100000$

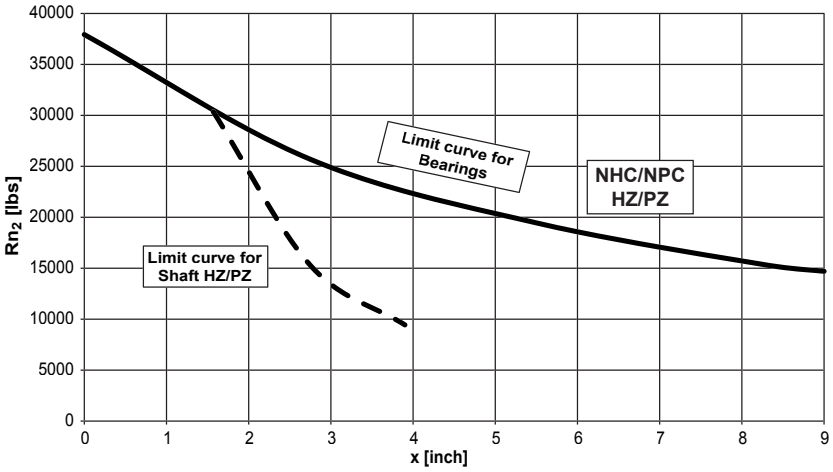

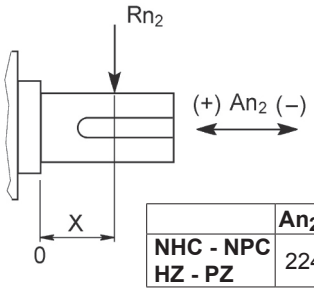

	An_2 (+)	An_2 (-)
NHC - NPC HZ - PZ	22480	15739

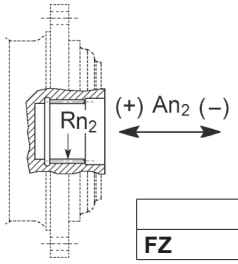

	Rn_2	An_2 (+/-)
FZ	6782	6261

		$Fh_2 = n_2 \cdot h$	10000	25000	50000	100000	500000	1000000
Load corrective factor fh_2 on shafts	fh_2	FZ	**2.15**	**1.59**	**1.26**	**1.00**	**0.58**	**0.46**
		NHC - NPC	**1.93**	**1.52**	**1.23**	**1.00**	**0.62**	**0.50**
		HZ - PZ	**1.24**	**1.00**	**1.00**	**1.00**	**0.62**	**0.50**

Permissible radial loads on input shaft with $Fh_1 : n_1 \cdot h = 250000$

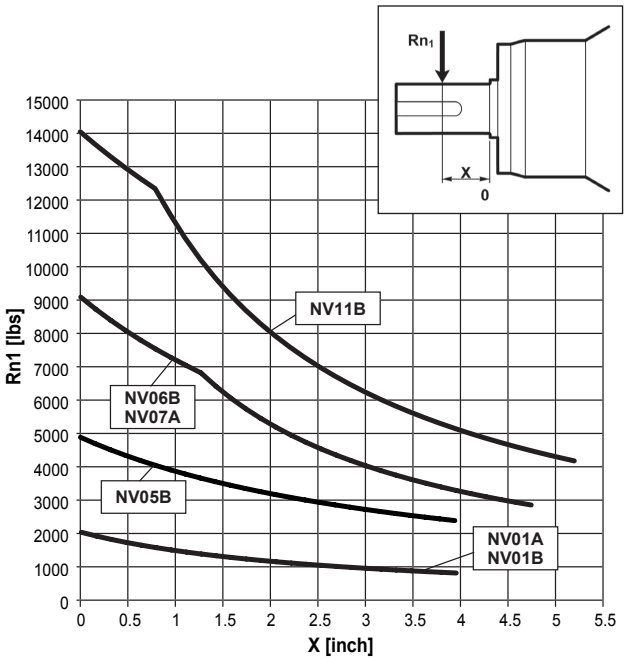

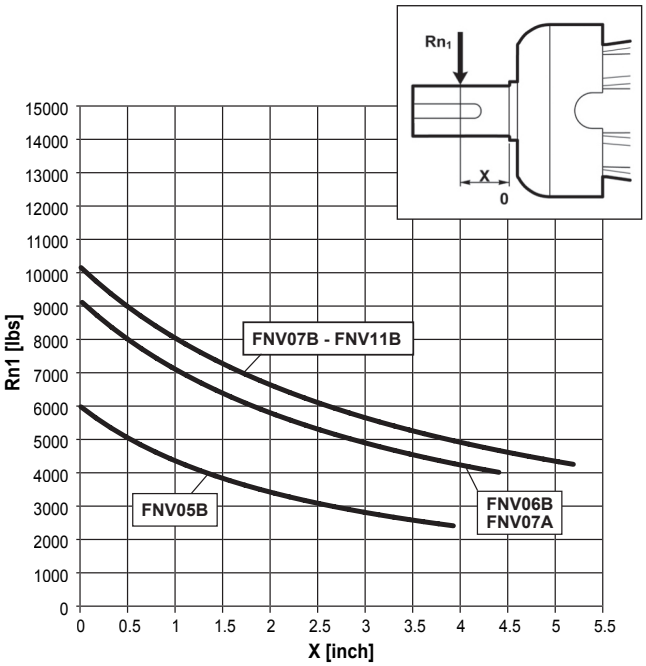

	$Fh_1 = n_1 \cdot h$	250000	500000	1000000	2000000	5000000	10000000
Load corrective factor fh_1 on shafts	fh_1	**1**	**0.79**	**0.63**	**0.50**	**0.37**	**0.29**

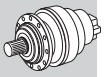

311M VK

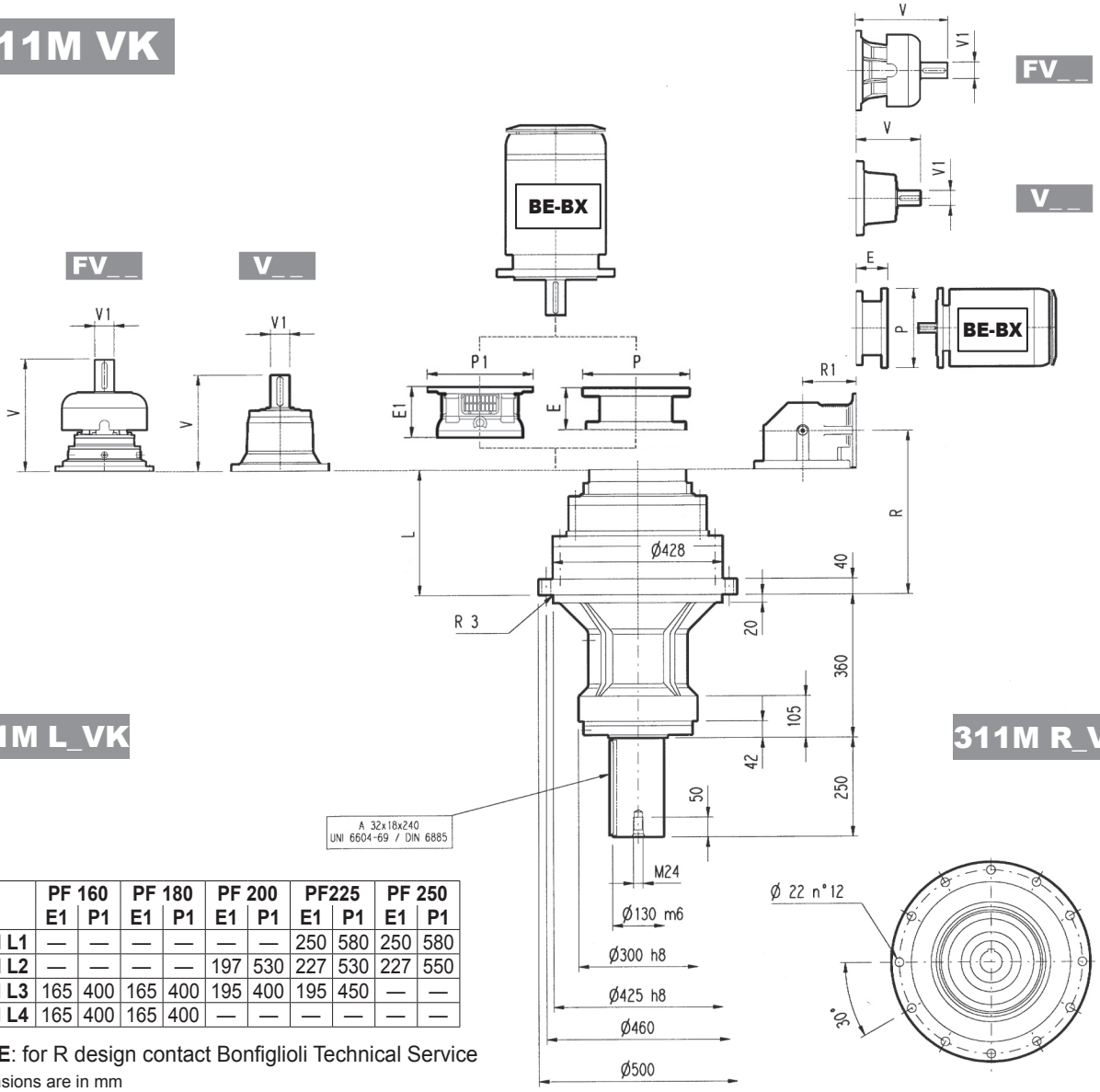

311M L_VK

311M R_VK

	PF 160		PF 180		PF 200		PF225		PF 250	
	E1	P1	E1	P1	E1	P1	E1	P1	E1	P1
311M L1	—	—	—	—	—	—	250	580	250	580
311M L2	—	—	—	—	197	530	227	530	227	550
311M L3	165	400	165	400	195	400	195	450	—	—
311M L4	165	400	165	400	—	—	—	—	—	—

NOTE: for R design contact Bonfiglioli Technical Service

Dimensions are in mm

	L	Kg	FV__			V__			FV__			V__		
			V	V1	Kg	V	V1	Kg	V	V1	Kg	V	V1	Kg
311M L1	129	295	348	80	55	—	—	—	456	80	85	—	—	—
311M L2	262	340	315	80	35	313	60	28	375	80	48	363	60	34
311M L3	351	350	239	48	15	—	—	—	276	48	17	—	—	—
311M L4	416	360	137.5	24	6	158	38	7	—	—	—	—	—	—

	P71		P80		P90		P100		P112		P132		P160		P180		P200		P225		P250	
	E	P	E	P	E	P	E	P	E	P	E	P	E	P	E	P	E	P	E	P	E	P
311M L1	—	—	—	—	—	—	—	—	—	—	—	—	—	—	—	—	267	400	297	450	297	550
311M L2	—	—	—	—	—	—	—	—	—	—	—	—	—	—	195	350	186	400	216	450	216	550
311M L3	—	—	—	—	—	—	—	—	—	—	114	300	144	350	144	350	174	400	—	—	—	—
311M L4	65	160	84	200	84	200	94	250	94	250	114	300	144	350	—	—	—	—	—	—	—	—

	R	R1	Kg	FV__			V__			FV__			V__		
				V	V1	Kg	V	V1	Kg	V	V1	Kg	V	V1	Kg
311M R2 (B)	354	345	420	307	60	23	—	—	—	357	60	28	—	—	—
311M R2 (C)	354	390	430	307	60	23	—	—	—	357	60	28	—	—	—
311M R3	381	225	385	239	48	15	—	—	—	276	48	17	—	—	—
311M R4	443	140	360	137.5	24	6	158	38	7	—	—	—	—	—	—

	P71		P80		P90		P100		P112		P132		P160		P180		P200		P225		P250	
	E	P	E	P	E	P	E	P	E	P	E	P	E	P	E	P	E	P	E	P	E	P
311M R2 (B)	—	—	—	—	—	—	—	—	—	—	—	—	—	—	152	350	182	400	212	450	193	550
311M R2 (C)	—	—	—	—	—	—	—	—	—	—	—	—	—	—	152	350	182	400	212	450	193	550
311M R3	—	—	—	—	—	—	—	—	—	—	114	300	144	350	144	350	174	400	—	—	—	—
311M R4	65	160	84	200	84	200	94	250	94	250	114	300	144	350	—	—	—	—	—	—	—	—

311M VK

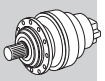

Metric

The diagram below allows the calculation of permitted overhung load R_{x2} on the output shaft of gearbox, with radial force applying at a distance x from shaft shoulder.
The curves are relevant to value resulting from the relationship of trust load A_{n2} to radial load R_{n2}, based on n_2 = 10 rpm and 10000 hrs theoretical lifetime.

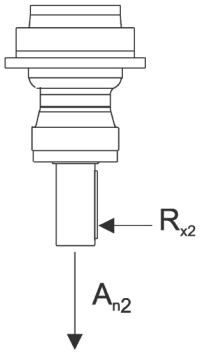

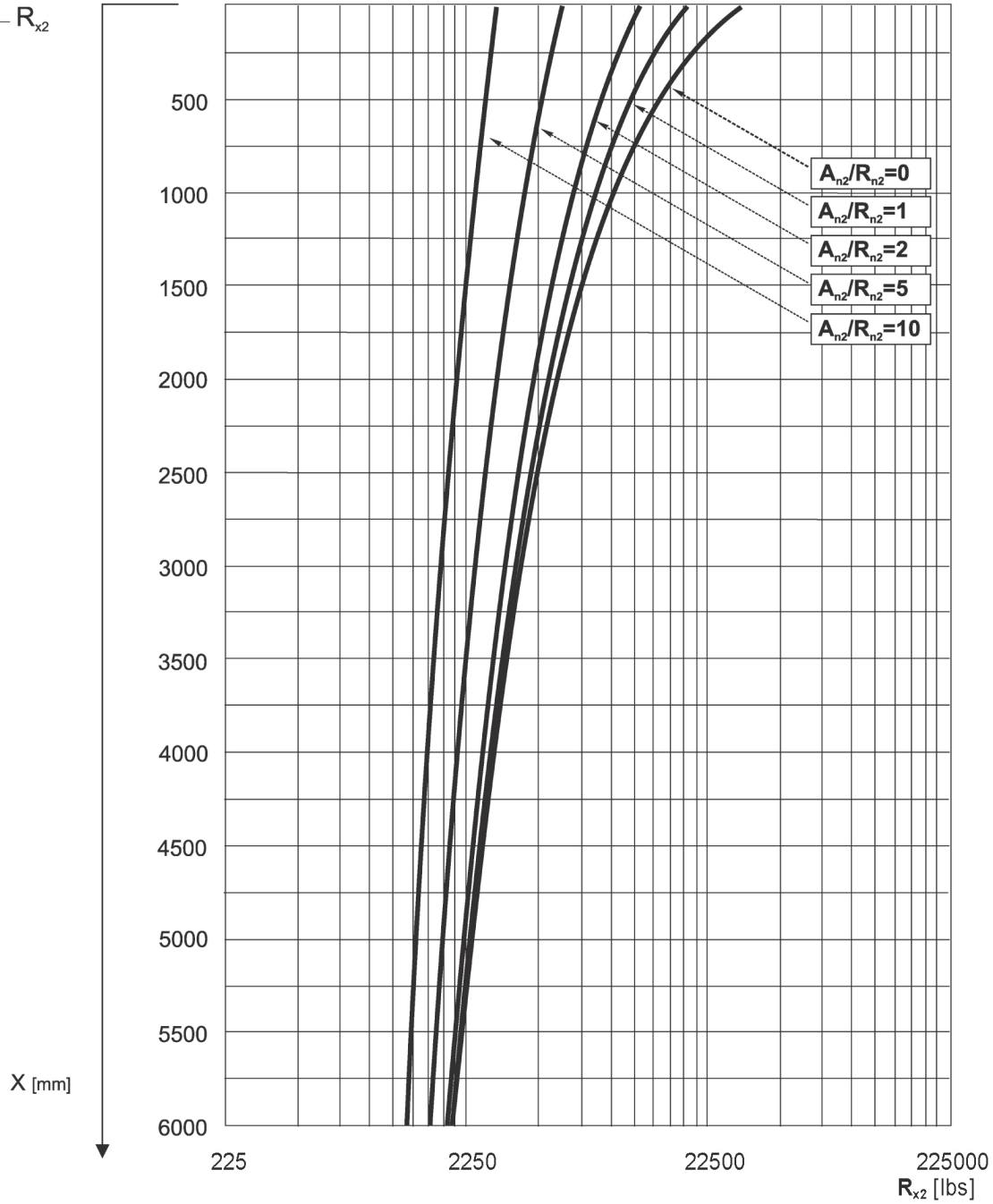

313M L

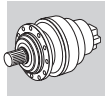

Metric

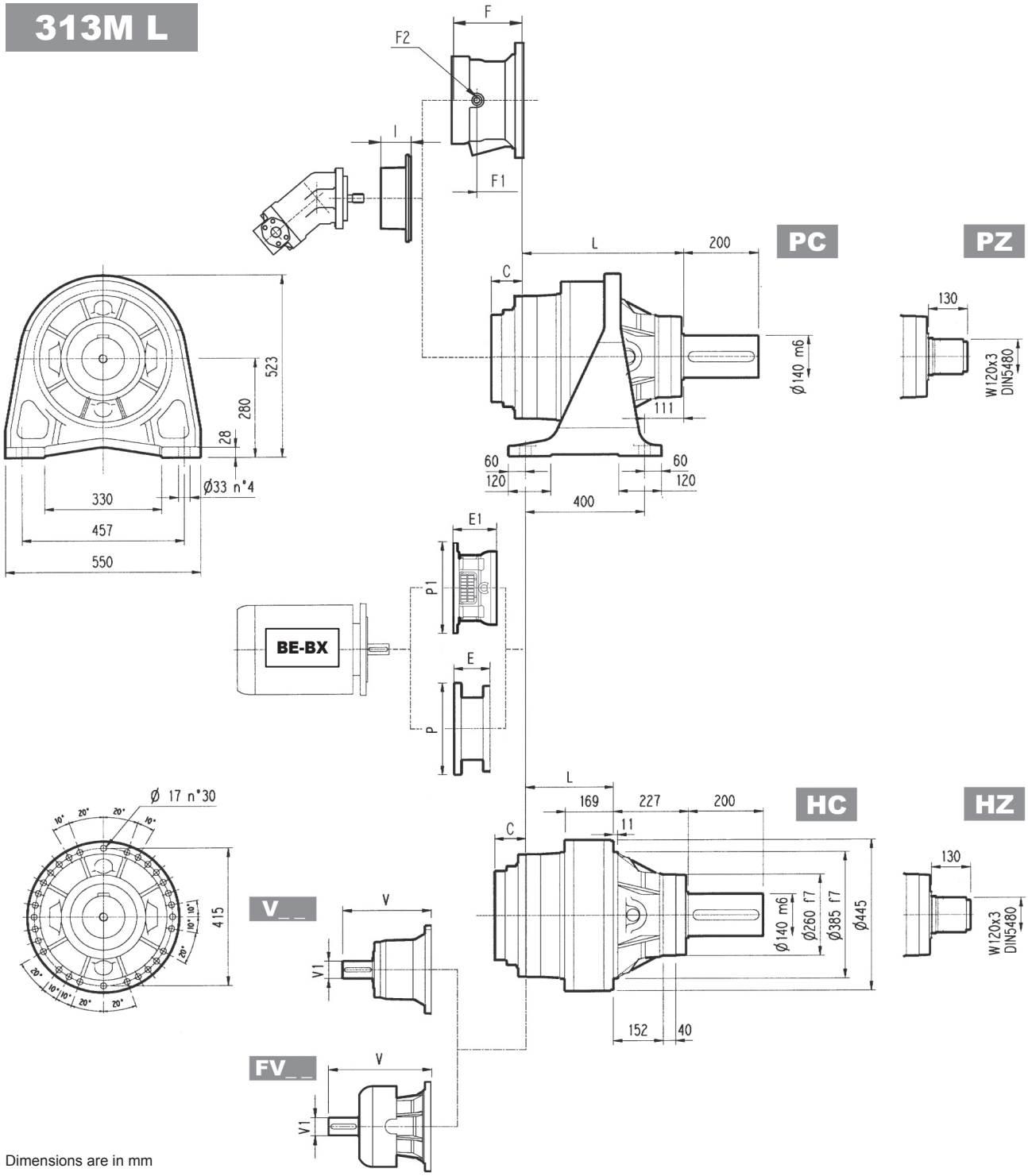

Dimensions are in mm

	L				Kg			
	PC - PZ	HC - HZ	FZ - FZP	FP	PC - PZ	HC - HZ	FZ - FZP	FP
313M L1	381	154	154	154	320	230	200	200
313M L2	531	304	304	304	380	290	260	280
313M L3	620	393	393	393	392	302	272	292
313M L4	685	458	458	458	399	309	279	299

	V	V1	Kg	V	V1	Kg	V	V1	Kg	V	V1	Kg	C	Input	I	F	F1	F2	Type	Input	Kg
313M L1	343	80	55	—	—	—	451	80	71	—	—	—	76	D		—	—	—	—	—	—
313M L2	315	80	35	313	60	28	375	80	48	363	60	34	51	B		201	153	1/4 G	6	B	28
313M L3	239	48	15	—	—	—	276	48	17	—	—	—	37	A		145	95	1/4 G	5	A	16
313M L4	137.5	24	6	158	38	7	—	—	—	—	—	—	37	A	532	105	65	1/4 G	4	A	10

313M L

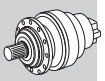

Metric

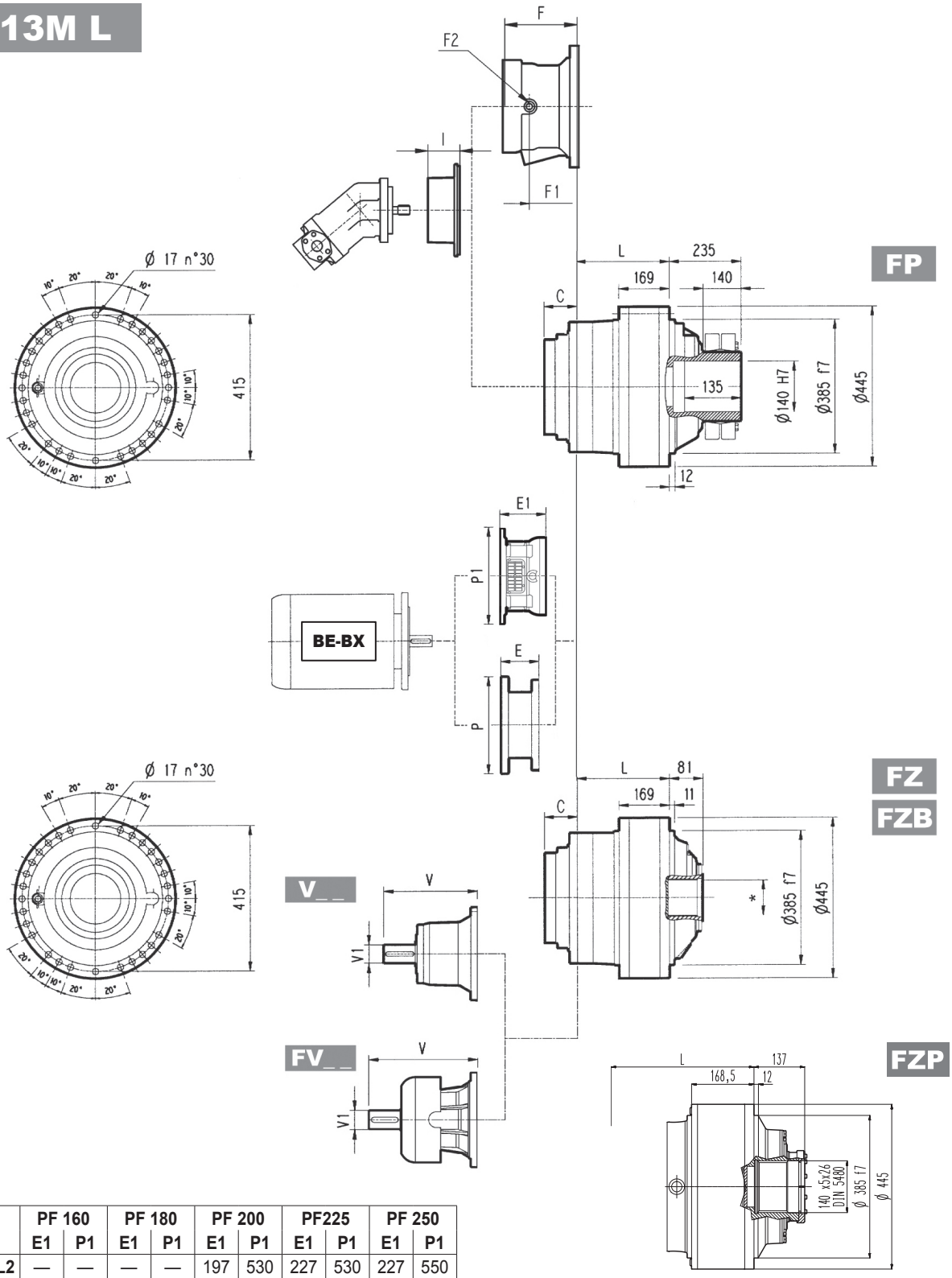

	PF 160		PF 180		PF 200		PF225		PF 250	
	E1	P1	E1	P1	E1	P1	E1	P1	E1	P1
313M L2	—	—	—	—	197	530	227	530	227	550
313M L3	165	400	165	400	195	400	195	450	—	—
313M L4	165	400	165	400	—	—	—	—	—	—

NOTE: for R design contact Bonfiglioli Technical Service

FP T_{2max} **= 699,210 lb•in**

Dimensions are in mm

* For dimensions refer to page 410

	P71		P80		P90		P100		P112		P132		P160		P180		P200		P225		P250	
	E	P	E	P	E	P	E	P	E	P	E	P	E	P	E	P	E	P	E	P	E	P
313M L2	—	—	—	—	—	—	—	—	—	—	—	—	—	—	195	350	186	400	216	450	216	550
313M L3	—	—	—	—	—	—	—	—	—	—	114	300	144	350	144	350	174	400	—	—	—	—
313M L4	65	160	84	200	84	200	94	250	94	250	114	300	144	350	—	—	—	—	—	—	—	—

313M R

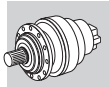

Metric

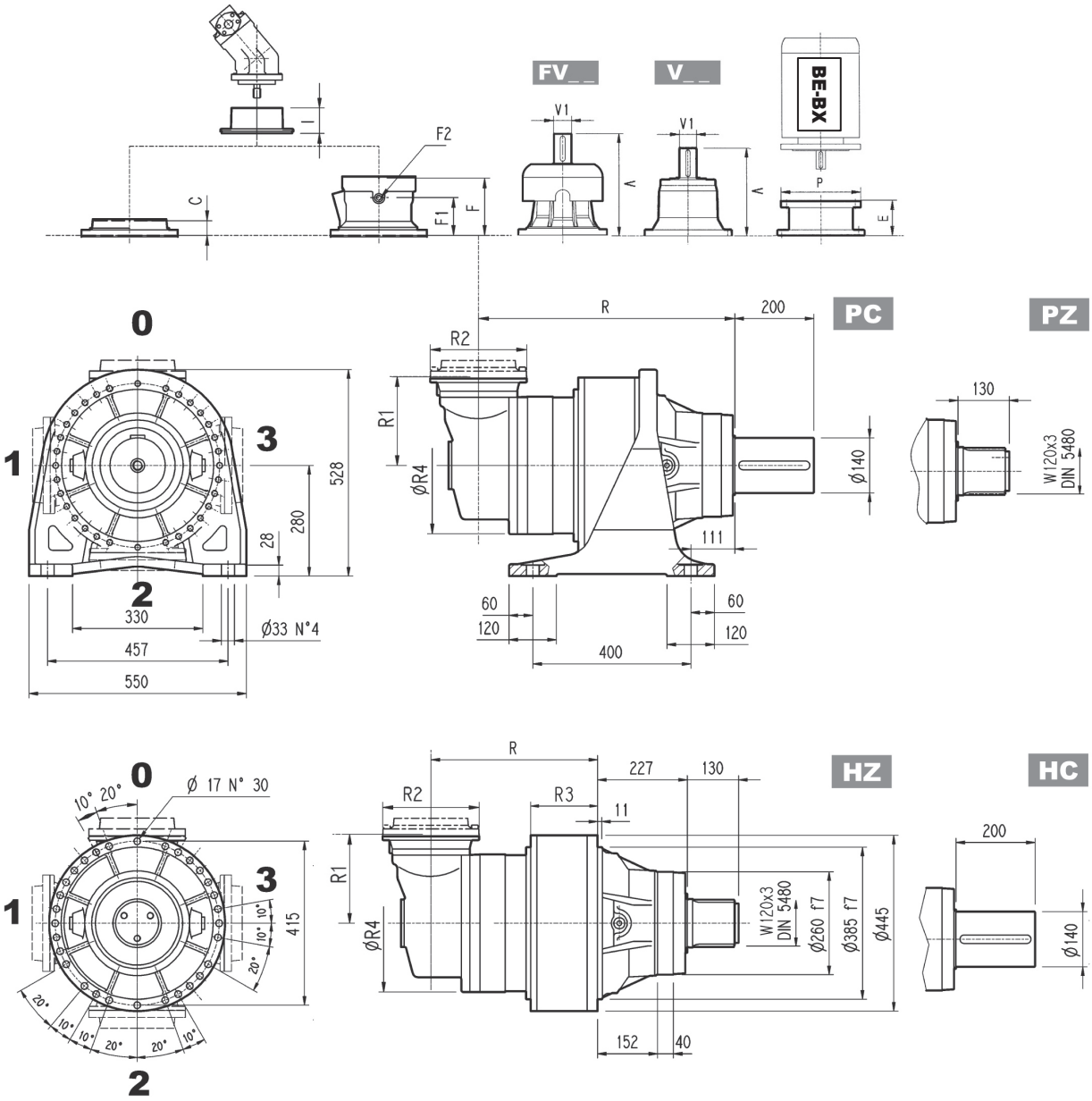

Dimensions are in mm

	R				R1	R2	R3			R4	Kg			
	PC-PZ	HC-HZ	FZ - FZP	FP			HC-HZ	FZ	FP		PC-PZ	HC-HZ	FZ - FZP	FP
313M R2 (B)	611	384	384	384	345	292	199	199	199	400	450	360	330	350
313M R2 (C)	611	384	384	384	390	292	168	168	168	480	460	370	340	360
313M R3	650	423	423	423	225	245	169	169	169	345	430	340	310	330
313M R4	712	485	485	485	140	186	169	169	169	244	412	322	292	312

	V	V1	Kg	V	V1	Kg	V	V1	Kg	V	V1	Kg	C	Input	I	F	F1	F2	Type	Input	Kg
313M R2 (B)	307	60	23	—	—	—	357	60	28	—	—	—	45	B		195	147	1/4 G	6	B	28
313M R2 (C)	307	60	23	—	—	—	357	60	28	—	—	—	45	B		195	147	1/4 G	6	B	28
313M R3	239	48	15	—	—	—	276	48	17	—	—	—	37	A	532	145	95	1/4 G	5	A	16
313M R4	137.5	24	6	158	38	7	—	—	—	—	—	—	37	A		105	65	1/4 G	4	A	10

313M R

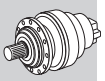

Metric

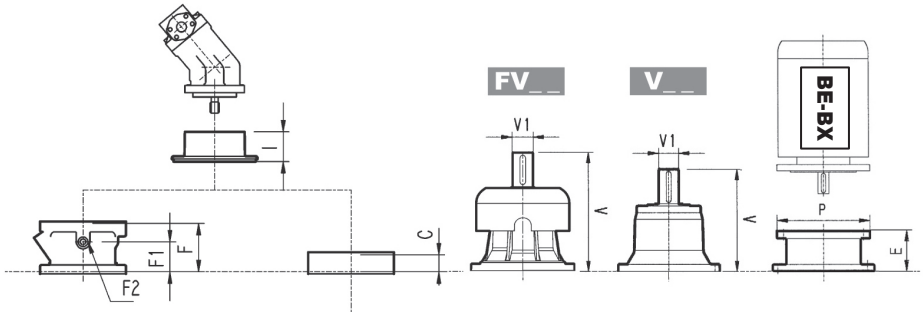

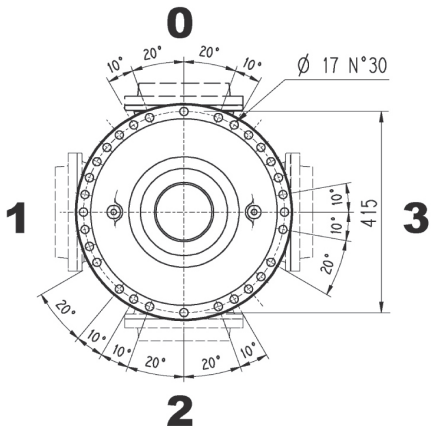

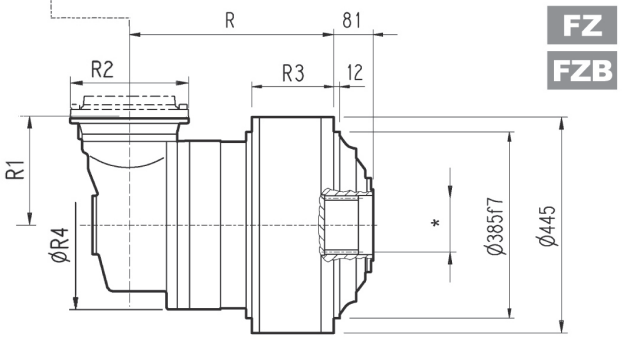

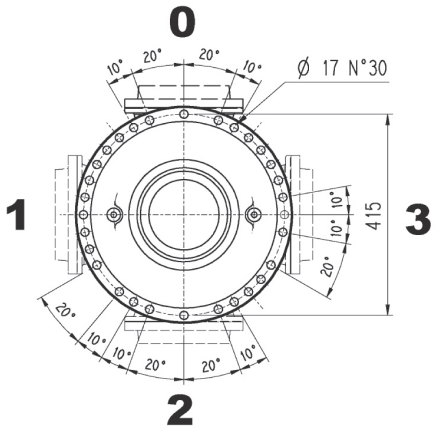

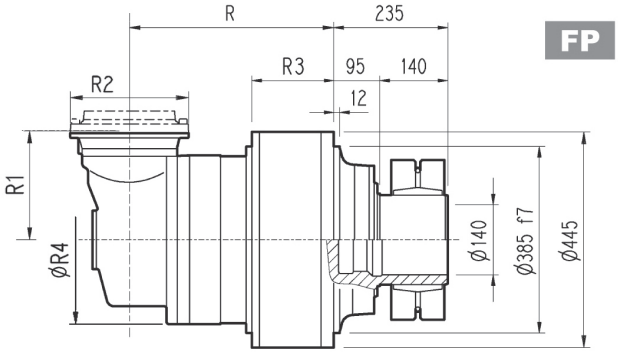

Only for configuration:

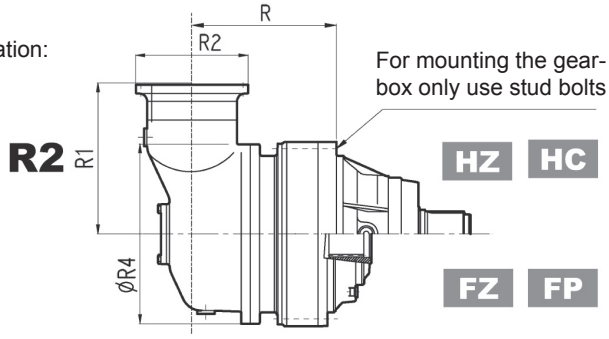

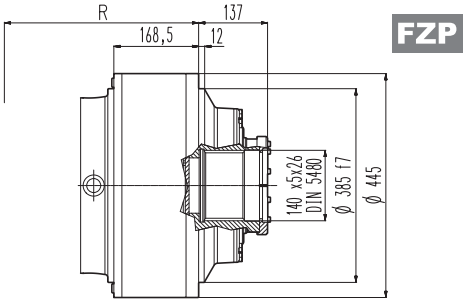

FP	T_{2max} = 699,210 lb•in

Dimensions are in mm

* For dimensions refer to page 410

	P71		P80		P90		P100		P112		P132		P160		P180		P200		P225		P250	
	E	P	E	P	E	P	E	P	E	P	E	P	E	P	E	P	E	P	E	P	E	P
313M R2 (B)	—	—	—	—	—	—	—	—	—	—	—	—	—	—	152	350	182	400	212	450	193	550
313M R2 (C)	—	—	—	—	—	—	—	—	—	—	—	—	—	—	152	350	182	400	212	450	193	550
313M R3	—	—	—	—	—	—	—	—	—	—	114	300	144	350	144	350	174	400	—	—	—	—
313M R4	65	160	84	200	84	200	94	250	94	250	114	300	144	350	—	—	—	—	—	—	—	—

Bonfiglioli Riduttori

313M L

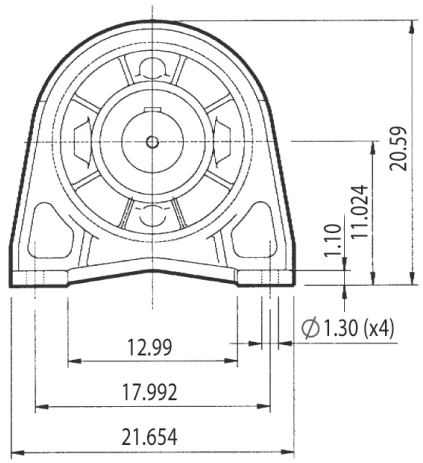

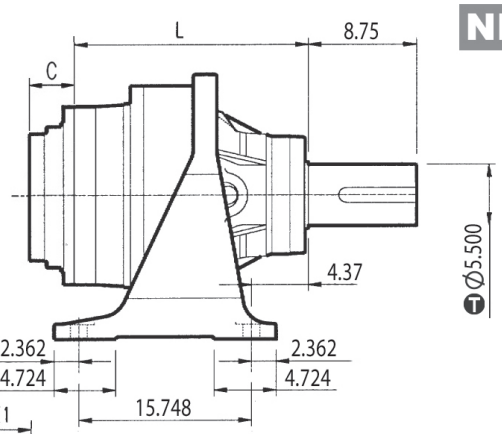

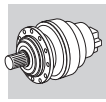

Imperial

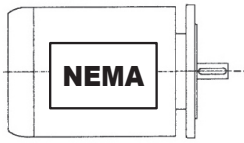

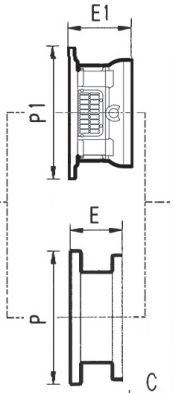

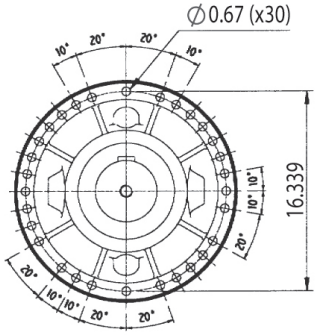

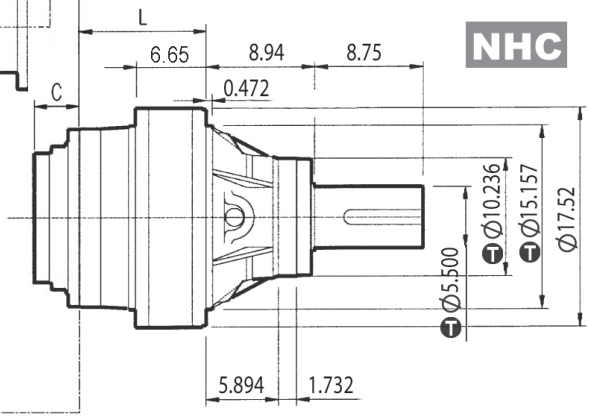

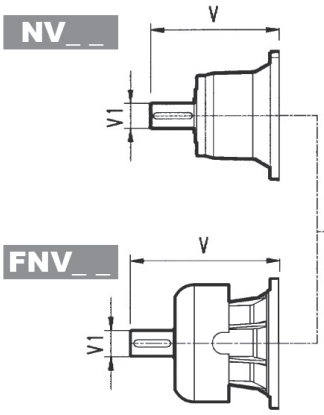

inch	T
15.157	-0.00244 -0.00469
10.236	-0.00220 -0.00425
5.500	+0.00157 +0.00059

	PF N250TC		PF N280TC		PF N320TC		PF N360TC	
	E1	P1	E1	P1	E1	P1	E1	P1
313M L2	—	—	—	—	9.921	20.866	11.496	20.866
313M L3	8.661	15.748	8.661	15.748	9.843	15.748	10.236	17.717
313M L4	8.661	15.748	8.661	15.748	—	—	—	—

NOTE: for R design contact Bonfiglioli Technical Service
for PF N400TC contact Bonfiglioli Technical Service

Dimensions are in Inch except when shown in *italic [mm]*

	L		lbs	
	NPC	NHC	NPC	NHC
313M L1	15.000	6.063	705.6	507.2
313M L2	20.906	11.969	837.9	639.5
313M L3	24.409	15.472	864.4	665.9
313M L4	26.969	18.031	879.8	681.3

	V	V1	lbs	V	V1	lbs	V	V1	lbs	V	V1	lbs	C	Input
313M L1	13.563	3.000	121.3	—	—	—	17.835	3.000	140.0	—	—	—	2.992	D
313M L2	13.130	2.375	29.8	12.283	3.000	77.2	15.104	2.375	38.0	14.646	3.000	90.0	2.008	B
313M L3	9.681	1.875	33.1	—	—	—	11.138	1.875	38.0	—	—	—	1.457	A
313M L4	5.996	1.125	13.2	6.437	1.625	15.4	—	—	—	—	—	—	1.457	A

	N56C		N140TC		N180TC		N210TC		N250TC		N280TC		N320TC		N360TC	
	E	P	E	P	E	P	E	P	E	P	E	P	E	P	E	P
313M L2	—	—	—	—	—	—	—	—	—	—	—	—	7.776	15.748	7.776	15.748
313M L3	—	—	—	—	—	—	—	—	5.216	11.811	6.221	13.780	—	—	—	—
313M L4	4.508	6.693	4.508	6.693	5.216	8.819	5.216	8.819	5.216	8.819	6.122	11.811	—	—	—	—

313M R

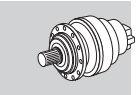

Imperial

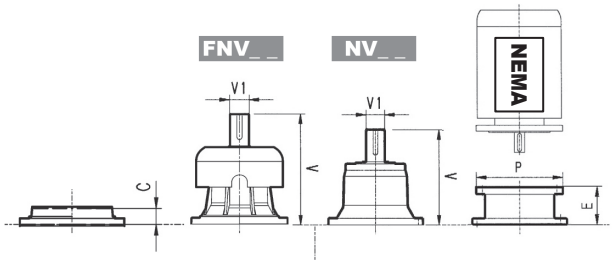

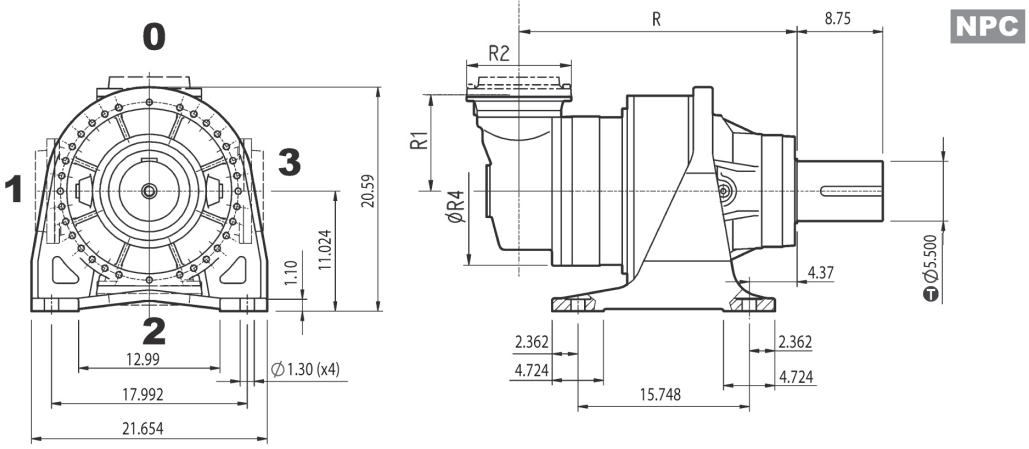

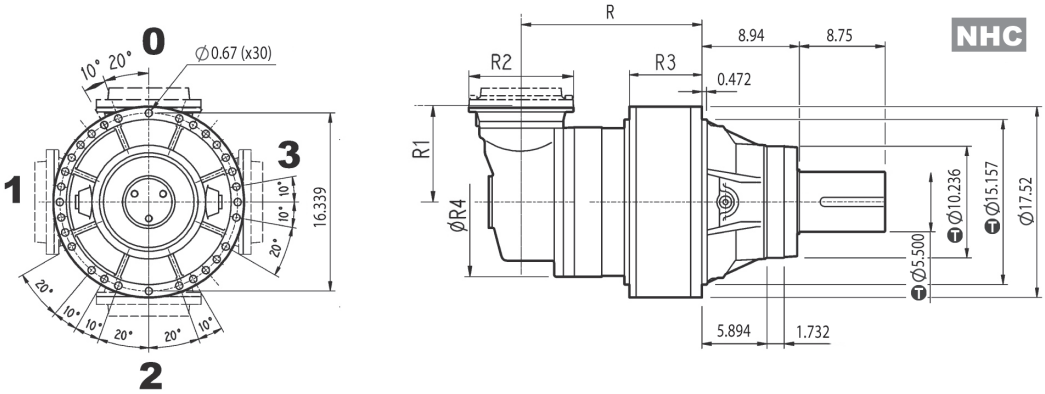

Only for configuration:

R2

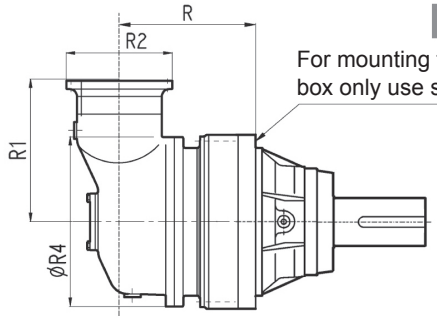

NHC

For mounting the gear-box only use stud bolts

inch	T
15.157	-0.00244 -0.00469
10.236	-0.00220 -0.00425
5.500	+0.00157 +0.00059

Dimensions are in Inch except when shown in *italic [mm]*

	R		R1	R2	R3	R4	lbs	
	NPC	NHC			NHC		NPC	NHC
313M R2 (B)	24.055	15.118	13.583	11.496	7.835	15.748	992.3	793.8
313M R2 (C)	24.055	15.118	15.354	11.496	6.614	18.898	1014.3	815.9
313M R3	25.591	16.654	8.858	9.646	6.654	13.583	948.2	749.7
313M R4	28.031	19.094	5.512	7.323	6.654	9.606	908.5	710.0

	V	V1	lbs	V	V1	lbs	V	V1	lbs	C	Input
313M R2 (B)	12.703	2.375	50.7	—	—	—	14.652	2.375	58.0	1.772	B
313M R2 (C)	12.703	2.375	50.7	—	—	—	14.652	2.375	58.0	1.772	B
313M R3	9.681	1.875	33.1	—	—	—	11.138	1.875	38.0	1.457	A
313M R4	5.996	1.125	13.2	6.437	1.625	15.4	—	—	—	1.457	A

	N56C		N140TC		N180TC		N210TC		N250TC		N280TC		N320TC		N360TC	
	E	P	E	P	E	P	E	P	E	P	E	P	E	P	E	P
313M R2 (B)	—	—	—	—	—	—	—	—	—	—	—	—	7.776	13.780	7.776	13.780
313M R2 (C)	—	—	—	—	—	—	—	—	—	—	—	—	7.776	13.780	7.776	13.780
313M R3	—	—	—	—	—	—	—	—	5.216	11.811	6.221	13.780	—	—	—	—
313M R4	4.508	6.693	4.508	6.693	5.216	8.819	5.216	8.819	5.216	8.819	6.122	11.811	—	—	—	—

Bonfiglioli Riduttori

3/V 13M L3

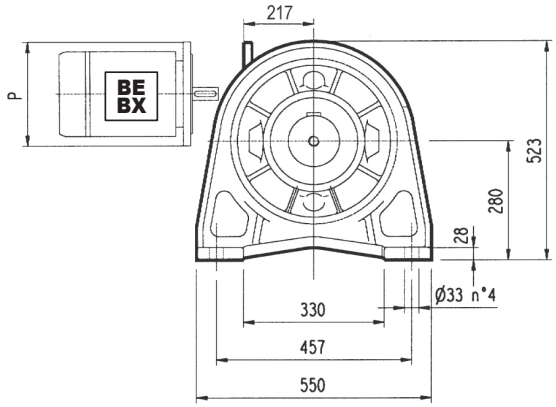

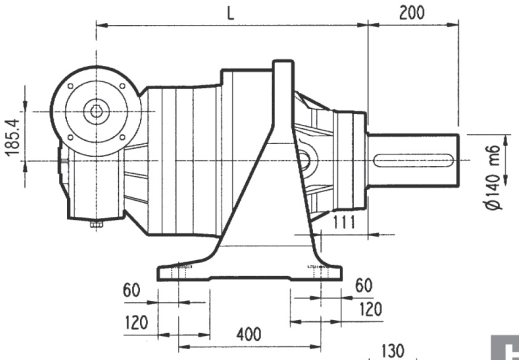

PC

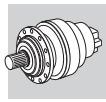

Metric

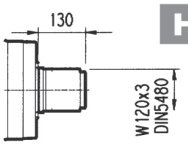

HZ PZ

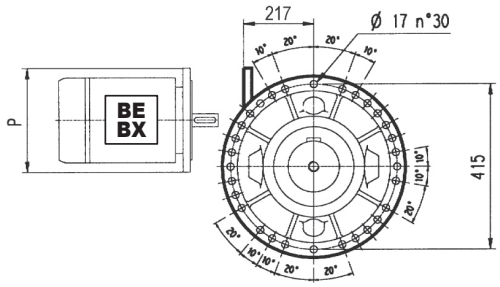

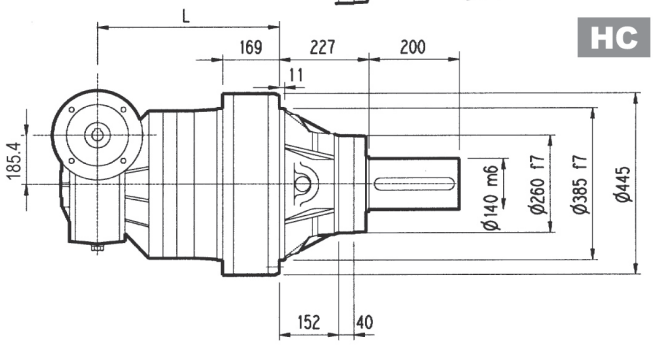

HC

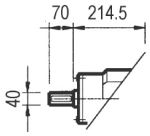

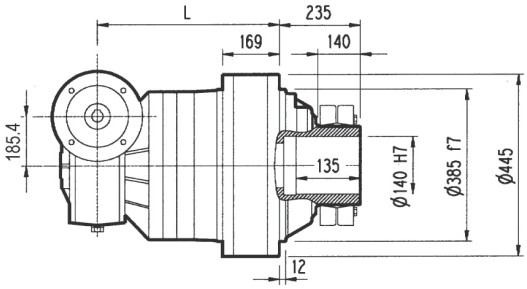

FP

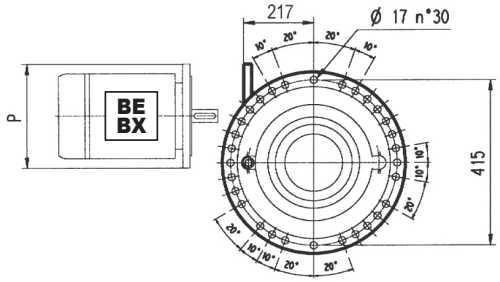

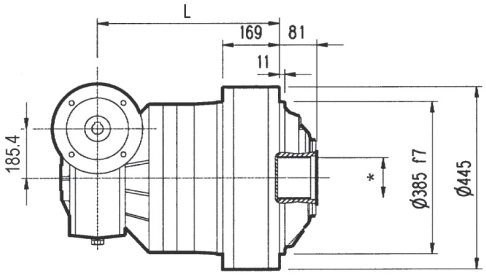

FZ
FZB

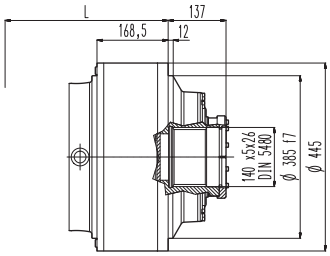

FZP

FP	T_{2max} = 699,210 lb•in

Dimensions are in mm

* For dimensions refer to page 410

	L				Kg				P80	P90	P100	P112	P132	P160	P180
	PC - PZ	HC - HZ	FZ - FZP	FP	PC - PZ	HC - HZ	FZ - FZP	FP	P	P	P	P	P	P	P
3/V 13M L3	732	505	505	505	475	385	355	375	—	—	250	250	300	350	350

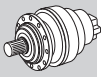

3/V 13M L4

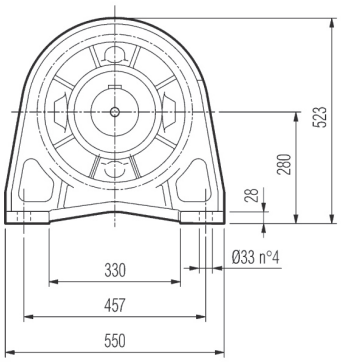

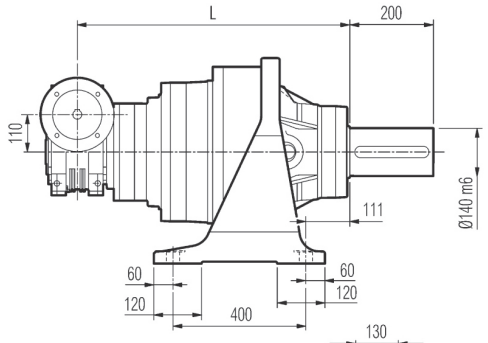

PC

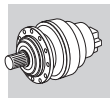

Metric

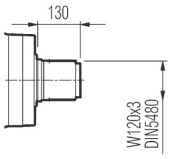

HZ PZ

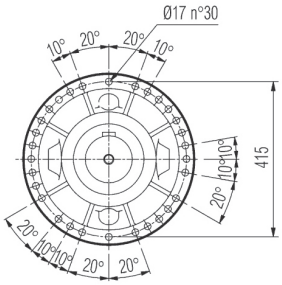

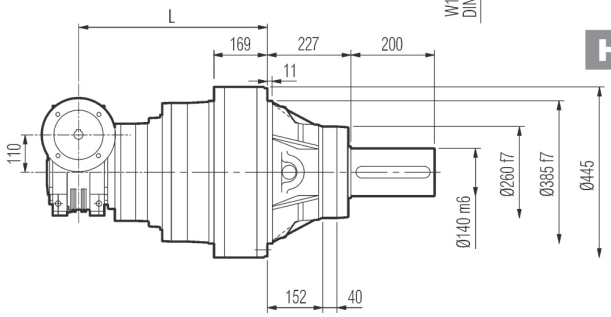

HC

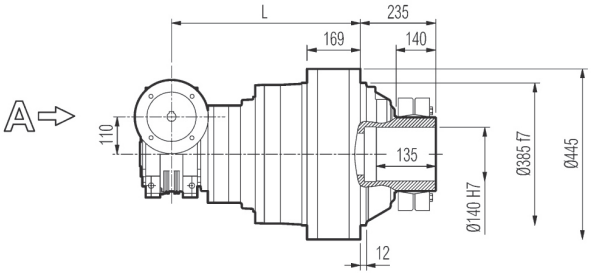

FP

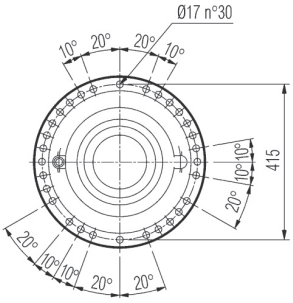

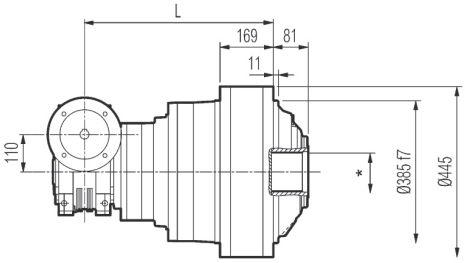

FZ
FZB

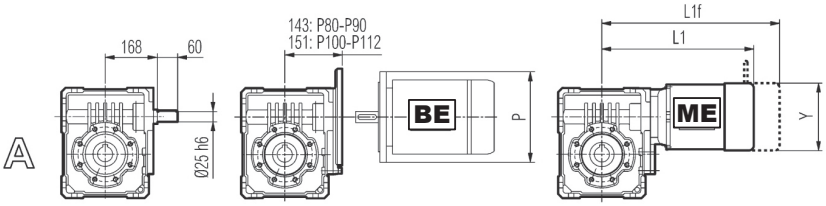

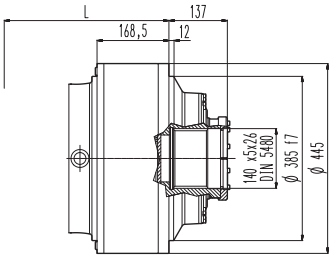

FZP

FP	T_{2max} = 699,210 lb•in

Dimensions are in mm

* For dimensions refer to page 410

	L				Kg			
	PC - PZ	HC - HZ	FZ - FZP	FP	PC - PZ	HC - HZ	FZ - FZP	FP
3/V 13M L4	780	553	553	553	425	335	305	325

	P80	P90	P100	P112	P132	S2 + ME2S			S3 + ME3S			S3 + ME3L		
	P	P	P	P	P	L1	L1f	Y	L1	L1f	Y	L1	L1f	Y
3/V 13M L4	200	200	250	250	300	364	—	156	407	—	193	439	—	193

3/V 13M L4

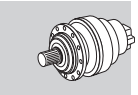

Imperial

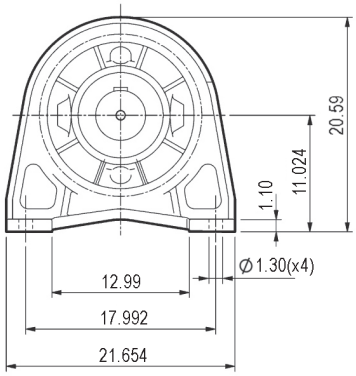

NPC

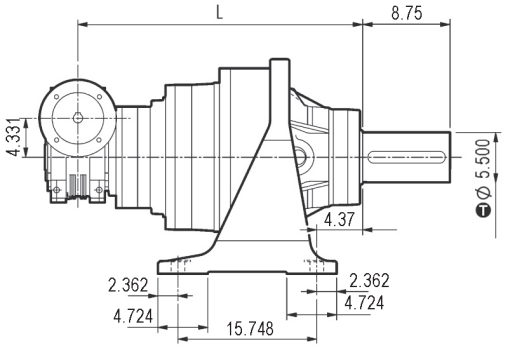

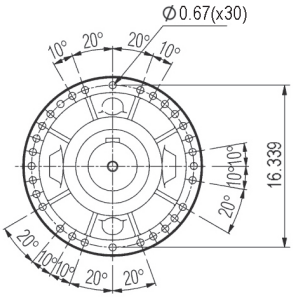

NHC

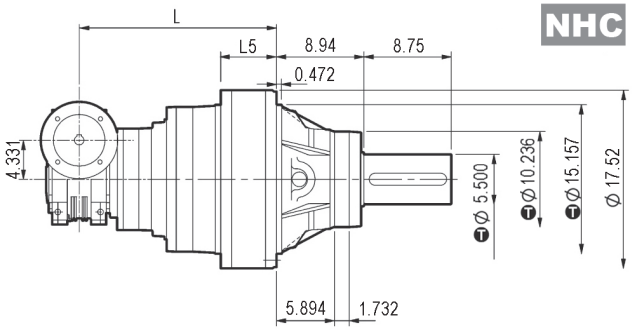

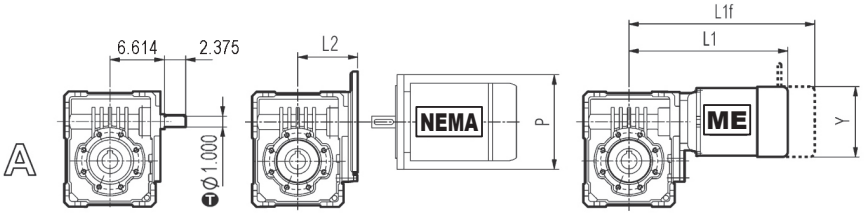

inch	Ⓣ
15.157	-0.00244 -0.00469
10.236	-0.00220 -0.00425
5.500	+0.00157 +0.00059

Dimensions are in Inch except when shown in *italic [mm]*

	L		lbs		N140TC		N180TC		N210TC	
	NPC	NHC	NPC	NHC	L2	P	L2	P	L2	P
3/V 13M L4	30.709	21.772	937.1	738.7	5.866	6.535	6.280	9.016	8.780	9.016

	S2 + ME2S			S3 + ME3S			S3 + ME3L		
	L1	L1f	Y	L1	L1f	Y	L1	L1f	Y
3/V 13M L4	14.331	—	6.142	16.024	—	7.598	17.283	—	7.598

Bonfiglioli Riduttori

313M L | 313M R | 3/V 13M L

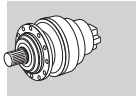

Metric

Imperial

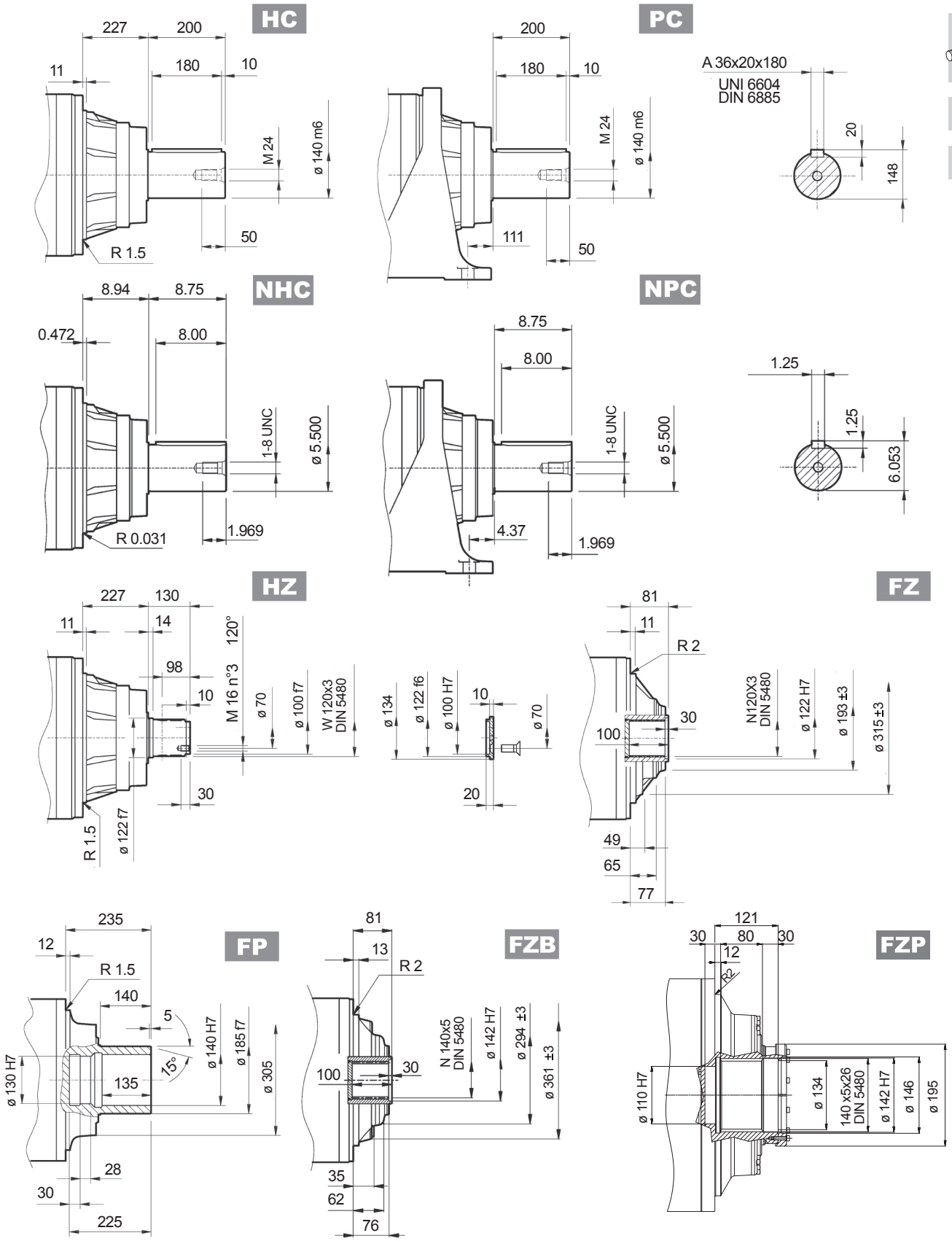

FP	T_{2max} = 699,210 lb•in

Dimensions are in mm when shown in italic, otherwise dimensions are in inches

inch	T
5.500	+0.00157 +0.00059

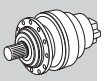

Flange

W0A

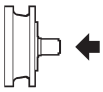

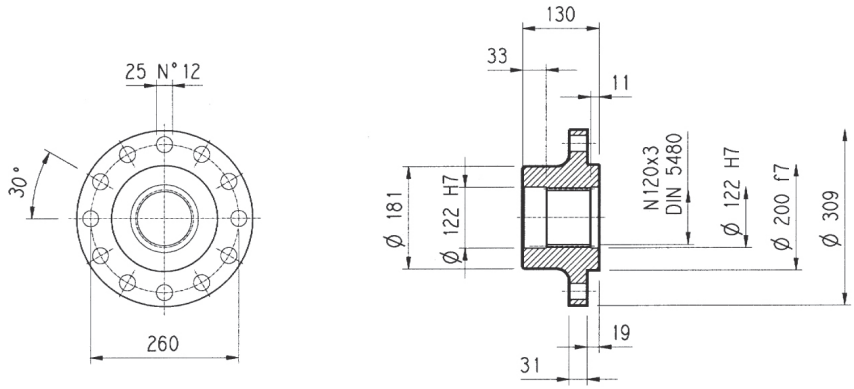

Material: Steel C40

Dimensions are in mm

Pinions

P...

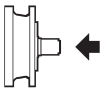

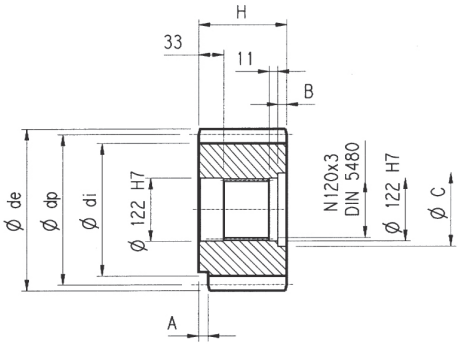

α = 20°

Dimensions are in mm

	m	z	x	dp	di	de	H	A	B	C	Material
PPH	16	17	0.500	272	247	315	135	—	5	136	Steel 39NiCrMo3 hardened and tempered
PRI	18	18	0.333	324	294	365	140	—	10	140	

Sleeve coupling

M0A

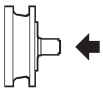

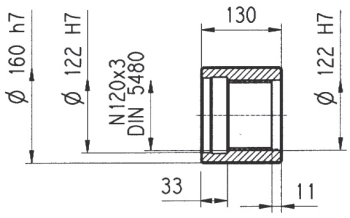

Material: Steel 16CrNi4

Dimensions are in mm

Splined bars

B0A

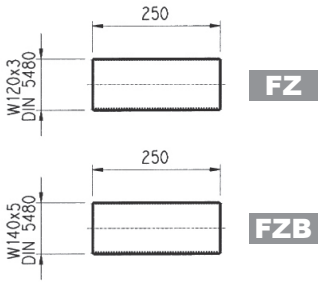

Material: Case hardening steel 18NiCrMo5 UNI 5331
must be case hardened 50-55 HRC

Shrink disc

G0A

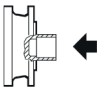

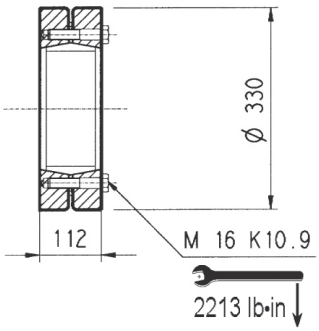

Dimensions are in mm

313M L 313M R

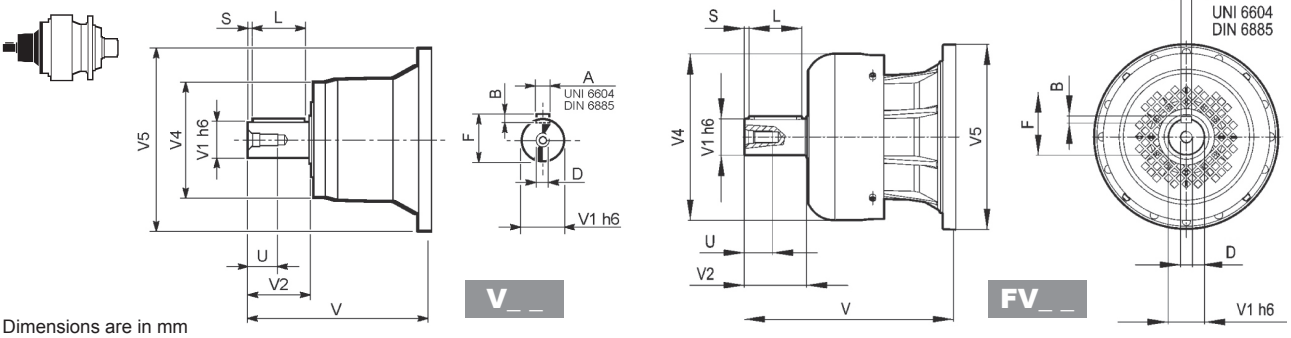

Metric

Dimensions are in mm

		V	V1	V2	V4	V5	A	B	F	L	S	D	U
313M L1	**V11B**	343	80	130	200	445	22	14	85	110	10	M16	36
	FV11B	451	80	130	347.5	445	22	14	85	110	10	M16	36
313M L2	**V07B**	315	80	130	200	345	22	14	85	110	10	M16	36
	FV07B	375	80	130	347.5	348	22	14	85	110	10	M16	36
	V07A	313	60	105	155	345	18	11	64	90	7.5	M16	36
	FV07A	363	60	105	309	348	18	11	64	90	7.5	M16	36
313M L3	**V05B**	239	48	82	155	245	14	9	51.5	70	6	M16	36
	FV05B	276	48	82	219.5	244	14	9	51.5	70	6	M16	36
313M L4	**V01A**	137.5	24	36	120	186	8	7	27	30	3	M8	19
	V01B	158	38	58	120	186	10	8	41	50	4	M12	28
313M R2 (B) (C)	**V06B**	307	60	105	155	292	18	11	64	90	7.5	M16	36
	FV06B	357	60	105	309	292	18	11	64	90	7.5	M16	36
313M R3	**V05B**	239	48	82	155	245	14	9	51.5	70	6	M16	36
	FV05B	276	48	82	219.5	244	14	9	51.5	70	6	M16	36
313M R4	**V01A**	137.5	24	36	120	186	8	7	27	30	3	M8	19
	V01B	158	38	58	120	186	10	8	41	50	4	M12	28

313M L 313M R

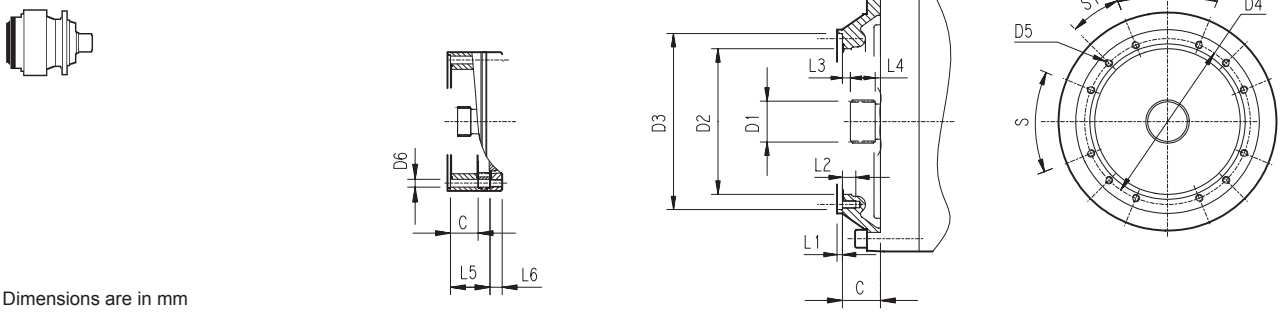

Dimensions are in mm

		C	D1	D2	D3	D4	D5	D6	L1	L2	L3	L4	L5	L6	S	S1	Input
313M L1	**V9AD**	75	80x74 DIN 5482	270	335 H7	314	M16 n°8	—	5	30	9.5	40	—	—	60°	30°	D
313M L2	**V9AB**	51	58x53 DIN 5482	195	236 H7	222	M10 n°12	—	4	18	11	22	—	—	45°	22.5°	B
313M L3	**V9AA**	37	40x36 DIN 5482	140	178 H7	165	M10 n°8	—	4	18	9	18	—	—	45°	45°	A
313M L4	**V9AA**	37	40x36 DIN 5482	140	178 H7	165	M10 n°8	11	4	—	9	18	65	18	45°	45°	A
313M R3	**V9AA**	37	40x36 DIN 5482	140	178 H7	165	M10 n°8	11	4	18	9	18	—	—	45°	45°	A
313M R2 (B) (C)	**V9AB**	45	58x53 DIN 5482	195	236 H7	222	M10 n°12	—	4	18	11	22	—	—	45°	22.5°	B
313M R4	**V9AA**	37	40x36 DIN 5482	140	178 H7	165	M10 n°8	11	4	—	9	18	37	18	45°	45°	A

3/V 13M L

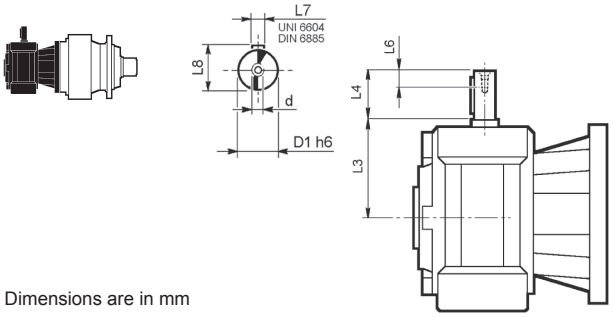

Dimensions are in mm

	D1 h6	L3	L4	L6	L7	L8	d
3/V 13M L3_HS	40	214.5	70	20	12	43	M8
3/V 13M L4_HS	25	168	60	19	8	28	M8

313M L 313M R

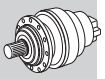

inch	Ⓣ
3.000	0 / -0.00075
2.375	0 / -0.00053
1.875	0 / -0.00053
1.625	0 / -0.00053
1.125	0 / -0.00051

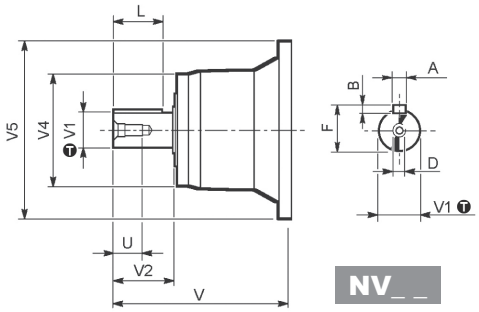

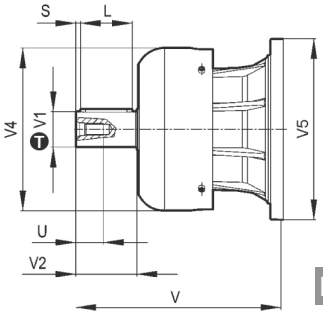

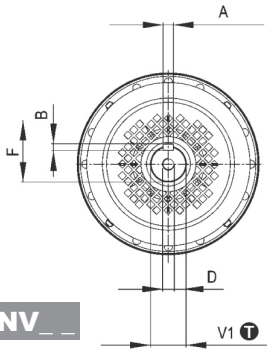

Dimensions are in Inch except when shown in *italic [mm]*

		V	V1	V2	V4	V5	A	B	F	L	D	U
313M L1	**NV11B**	13.563	3.000	5.000	8.160	16.850	0.750	0.750	3.328	4.374	3/4-10 UNC	1.654
	FNV11B	17.835	3.000	5.000	13.678	16.850	0.750	0.750	3.328	4.374	3/4-10 UNC	1.654
313M L2	**NV07B**	12.283	3.000	5.000	7.165	13.699	0.750	0.750	3.328	4.374	3/4-10 UNC	1.654
	FNV07B	14.646	3.000	5.000	13.677	13.699	0.750	0.750	3.328	4.374	3/4-10 UNC	1.654
	NV07A	13.130	2.375	4.750	6.024	13.700	0.625	0.625	2.645	4.250	3/4-10 UNC	1.654
	FNV07A	15.104	2.375	4.750	6.811	13.700	0.625	0.625	2.645	4.250	3/4-10 UNC	1.654
313M L3	**NV05B**	9.681	1.875	3.500	6.417	9.606	0.500	0.500	2.091	3.000	5/8-11 UNC	1.417
	FNV05B	11.138	1.875	3.500	8.641	9.606	0.500	0.500	2.091	3.000	5/8-11 UNC	1.417
313M L4	**NV01A**	5.996	1.125	2.000	4.980	7.323	0.250	0.250	1.236	1.752	3/8-16 UNC	0.866
	NV01B	6.437	1.625	2.500	4.980	7.323	0.375	0.375	1.791	2.000	1/2-13 UNC	1.102
313M R2 (B) (C)	**NV06B**	12.703	2.375	4.750	6.417	11.496	0.625	0.625	2.646	4.252	3/4-10 UNC	1.654
	FNV06B	14.652	2.375	4.750	12.165	11.496	0.625	0.625	2.646	4.252	3/4-10 UNC	1.654
313M R3	**NV05B**	9.681	1.875	3.500	6.417	9.606	0.500	0.500	2.091	3.000	5/8-11 UNC	1.417
	FNV05B	11.138	1.875	3.500	8.641	9.606	0.500	0.500	2.091	3.000	5/8-11 UNC	1.417
313M R4	**NV01A**	5.996	1.125	2.000	4.980	7.323	0.250	0.250	1.236	1.752	3/8-16 UNC	0.866
	NV01B	6.437	1.625	2.500	4.980	7.323	0.375	0.375	1.791	2.000	1/2-13 UNC	1.102

313M L 313M R

inch	Ⓣ
13.19	+0.00224 / 0
9.29	+0.00181 / 0
7.01	+0.00157 / 0

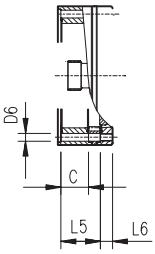

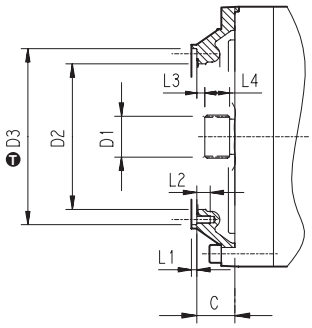

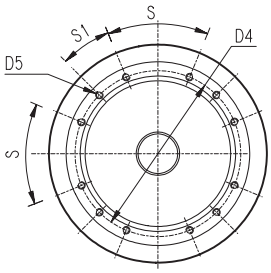

Dimensions are in Inch except when shown in *italic [mm]*

		C	D1	D2	D3	D4	D5	D6	L1	L2	L3	L4	L5	L6	S	S1	Input
313M L1	**V9AD**	3.19	*80x74 DIN 5482*	10.63	13.19	12.36	*M16 n°8*	—	0.20	1.18	0.33	1.57	—	—	60°	30°	D
313M L2	**V9AB**	2.01	*58x53 DIN 5482*	7.68	9.29	8.74	*M10 n°12*	—	0.16	0.71	0.43	0.87	—	—	45°	22.5°	B
313M L3	**V9AA**	1.46	*40x36 DIN 5482*	5.51	7.01	6.50	*M10 n°8*	—	0.16	0.71	0.35	0.71	—	—	45°	45°	A
313M L4	**V9AA**	1.46	*40x36 DIN 5482*	5.51	7.01	6.50	*M10 n°8*	0.43	0.16	—	0.35	0.71	2.56	0.71	45°	45°	A
313M R3	**V9AA**	1.46	*40x36 DIN 5482*	5.51	7.01	6.50	*M10 n°8*	0.43	0.16	0.71	0.35	0.71	—	—	45°	45°	A
313M R2 (B) (C)	**V9AB**	1.77	*58x53 DIN 5482*	7.68	9.29	8.74	*M10 n°12*	—	0.16	0.71	0.43	0.87	—	—	45°	22.5°	B
313M R4	**V9AA**	1.46	*40x36 DIN 5482*	5.51	7.01	6.50	*M10 n°8*	0.43	0.16	—	0.35	0.71	1.46	0.71	45°	45°	A

3/V 13M L

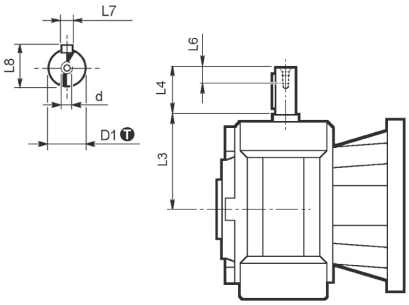

inch	Ⓣ
1.000	0 / -0.00051

Dimensions are in Inch except when shown in *italic [mm]*

	D1	L3	L4	L6	L7	L8	d
3/V 13M L4_HS	1.000	11.89	1.969	0.75	0.250	1.109	3/8-16UNC

313M L 313M R 3/V 13M L

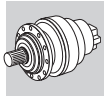

Imperial

Permissible radial and axial loads on output shaft with $Fh_2 : n_2 \cdot h = 100000$

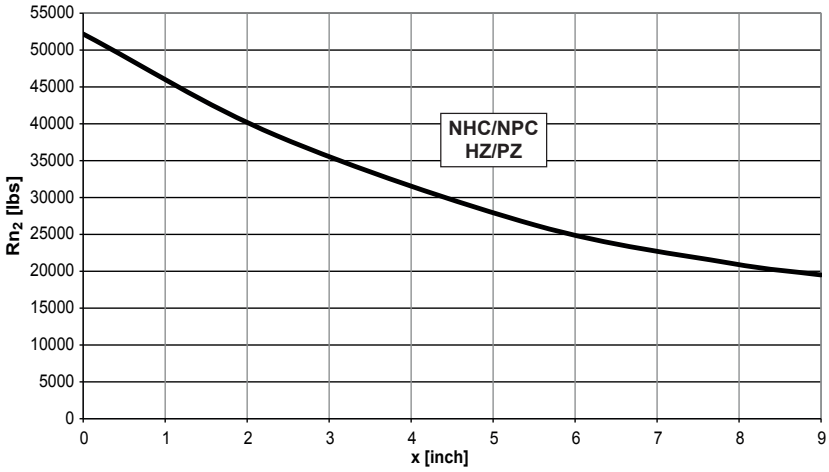

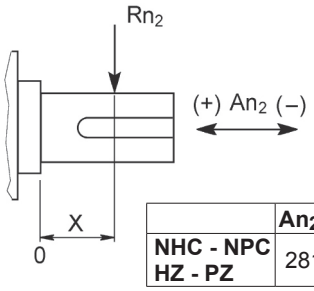

	An_2 (+)	An_2 (-)
NHC - NPC HZ - PZ	28100	17984

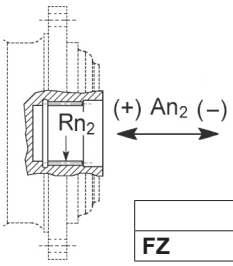

	Rn_2	An_2 (+/-)
FZ	8347	7826

Load corrective factor fh_2 on shafts	$Fh_2 = n_2 \cdot h$		10000	25000	50000	100000	500000	1000000
	fh_2	FZ	**2.15**	**1.59**	**1.26**	**1.00**	**0.58**	**0.46**
		NHC - NPC - HZ -PZ	**1.32**	**1.20**	**1.20**	**1.00**	**0.62**	**0.50**

Permissible radial loads on input shaft with $Fh_1 : n_1 \cdot h = 250000$

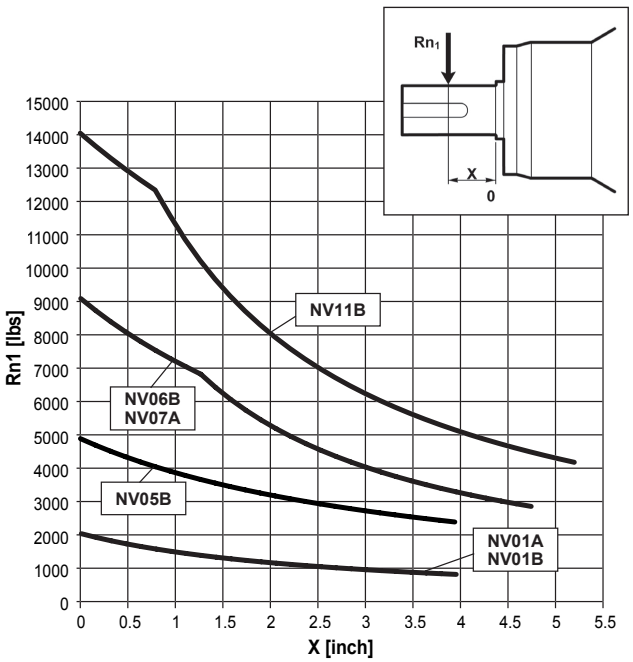

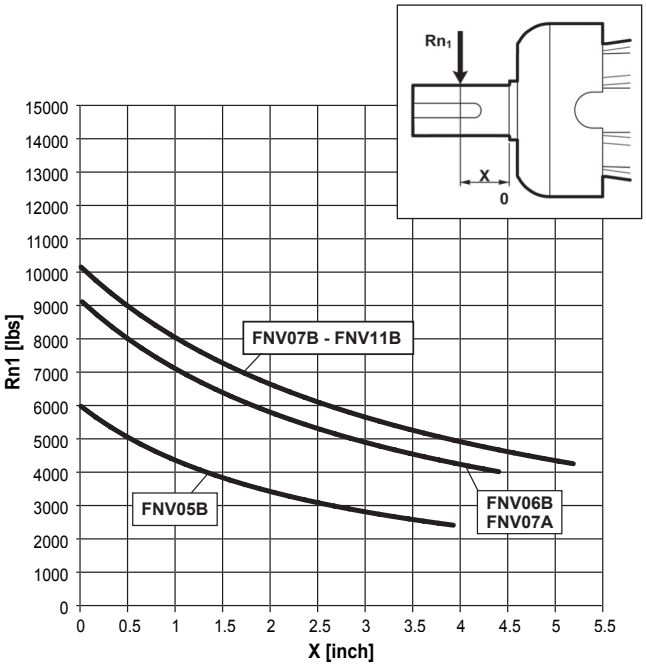

Load corrective factor fh_1 on shafts	$Fh_1 = n_1 \cdot h$	250000	500000	1000000	2000000	5000000	10000000
	fh_1	**1**	**0.79**	**0.63**	**0.50**	**0.37**	**0.29**

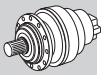

313M VK

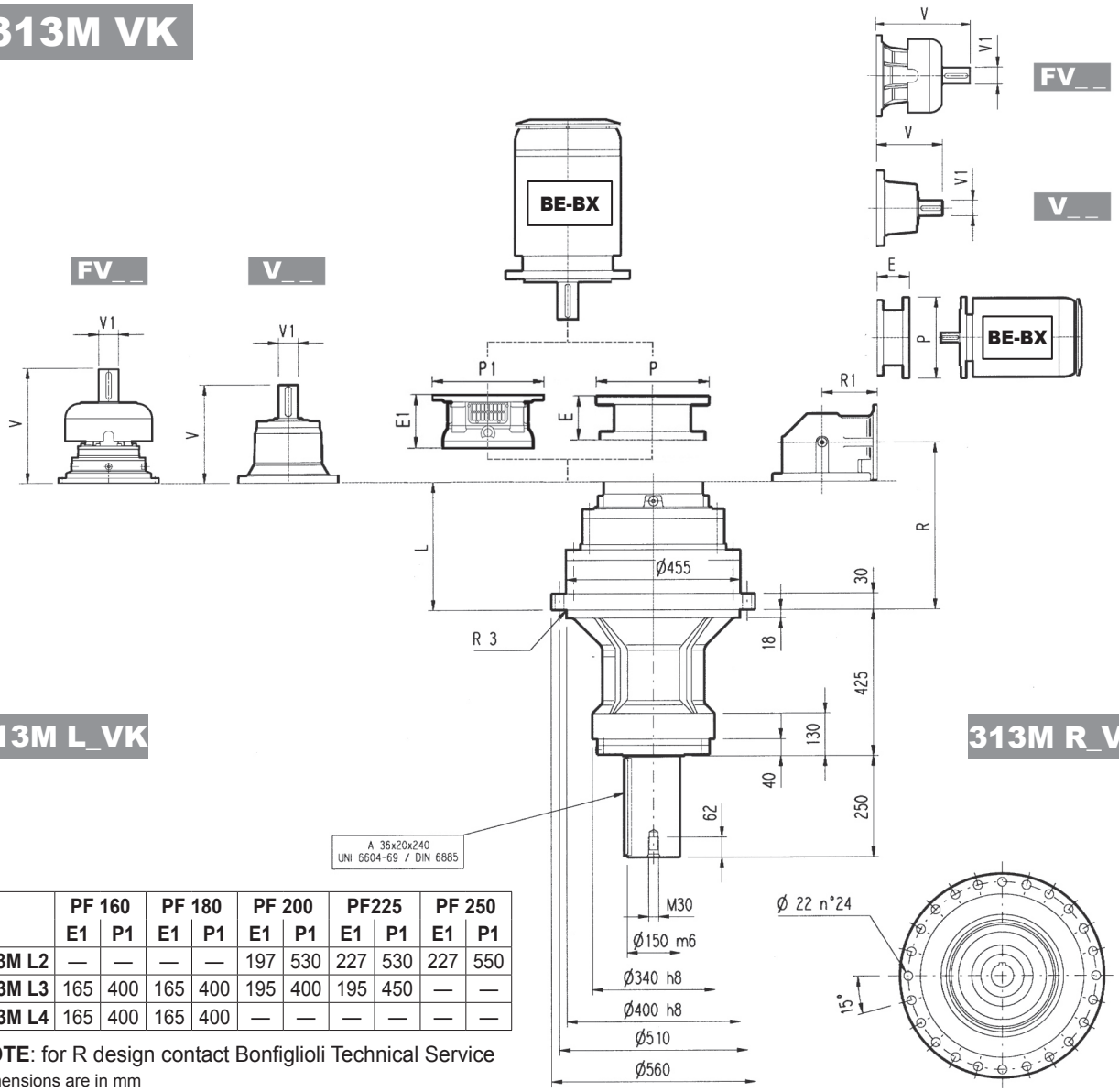

313M L_VK

313M R_VK

	PF 160		PF 180		PF 200		PF225		PF 250	
	E1	P1	E1	P1	E1	P1	E1	P1	E1	P1
313M L2	—	—	—	—	197	530	227	530	227	550
313M L3	165	400	165	400	195	400	195	450	—	—
313M L4	165	400	165	400	—	—	—	—	—	—

NOTE: for R design contact Bonfiglioli Technical Service

Dimensions are in mm

	L	Kg	V	V1	Kg	V	V1	Kg	V	V1	Kg	V	V1	Kg
313M L1	158	380	343	80	55	—	—	—	451	80	71	—	—	—
313M L2	308	440	315	80	35	313	60	28	375	80	48	363	60	34
313M L3	397	450	239	48	15	—	—	—	276	48	17	—	—	—
313M L4	462	460	137.5	24	6	158	38	7	—	—	—	—	—	—

	P71		P80		P90		P100		P112		P132		P160		P180		P200		P225		P250	
	E	P	E	P	E	P	E	P	E	P	E	P	E	P	E	P	E	P	E	P	E	P
313M L2	—	—	—	—	—	—	—	—	—	—	—	—	—	—	195	350	186	400	216	450	216	550
313M L3	—	—	—	—	—	—	—	—	—	—	114	300	144	350	144	350	174	400	—	—	—	—
313M L4	65	160	84	200	84	200	94	250	94	250	114	300	144	350	—	—	—	—	—	—	—	—

	R	R1	Kg	V	V1	Kg	V	V1	Kg	V	V1	Kg	V	V1	Kg
313M R2 (B)	388	345	510	307	60	23	—	—	—	357	60	28	—	—	—
313M R2 (C)	388	390	520	307	60	23	—	—	—	357	60	28	—	—	—
313M R3	427	225	490	239	48	15	—	—	—	—	—	—	—	—	—
313M R4	489	140	470	137.5	24	6	158	38	7	—	—	—	—	—	—

	P71		P80		P90		P100		P112		P132		P160		P180		P200		P225		P250	
	E	P	E	P	E	P	E	P	E	P	E	P	E	P	E	P	E	P	E	P	E	P
313M R2 (B)	—	—	—	—	—	—	—	—	—	—	—	—	—	—	152	350	182	400	212	450	193	550
313M R2 (C)	—	—	—	—	—	—	—	—	—	—	—	—	—	—	152	350	182	400	212	450	193	550
313M R3	—	—	—	—	—	—	—	—	—	—	114	300	144	350	144	350	174	400	—	—	—	—
313M R4	65	160	84	200	84	200	94	250	94	250	114	300	144	350	—	—	—	—	—	—	—	—

313M VK

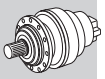

Metric

The diagram below allows the calculation of permitted overhung load R_{x2} on the output shaft of gearbox, with radial force applying at a distance x from shaft shoulder.
The curves are relevant to value resulting from the relationship of trust load A_{n2} to radial load R_{n2}, based on n_2 = 10 rpm and 10000 hrs theoretical lifetime.

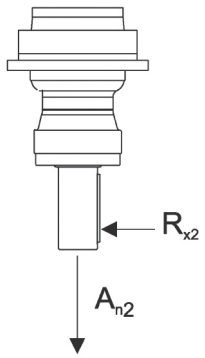

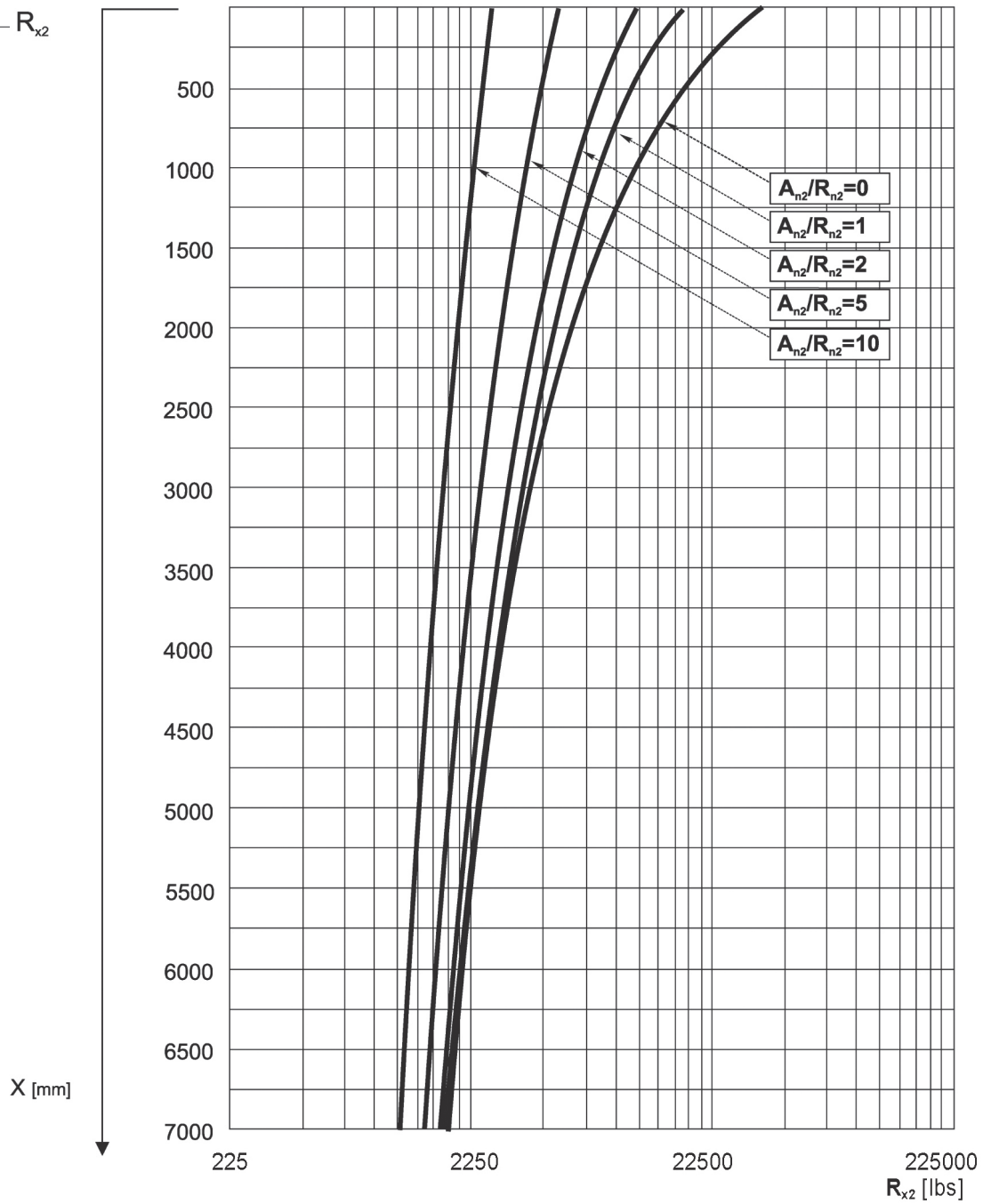

314M L

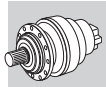

Metric

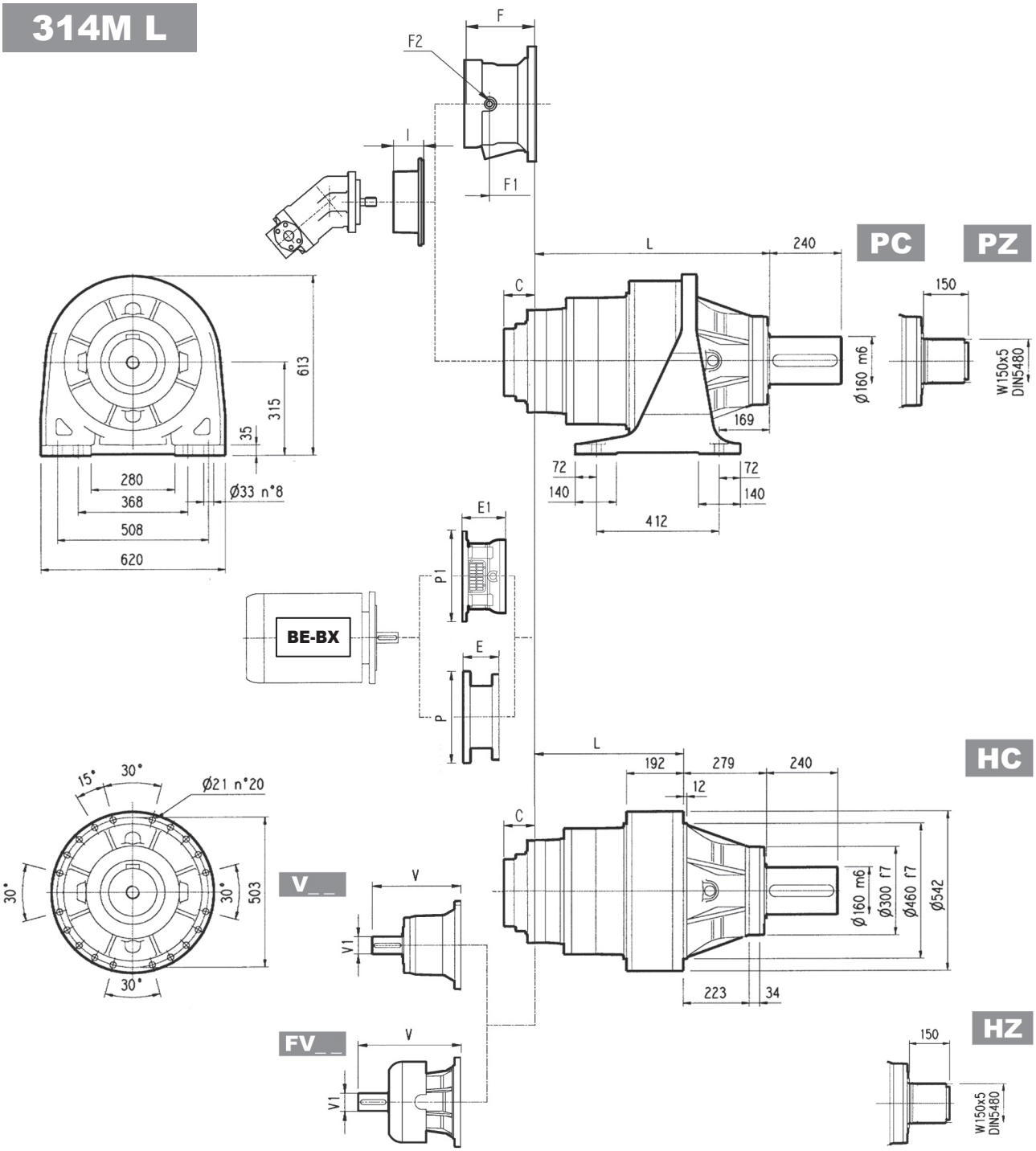

Dimensions are in mm

	L				Kg			
	PC - PZ	HC - HZ	FZ - FZP	FP	PC - PZ	HC - HZ	FZ - FZP	FP
314M L1	453	174	174	174	500	370	280	330
314M L2	641	362	362	362	545	415	325	375
314M L3	777	498	498	498	590	460	370	420
314M L4	842	563	563	563	600	470	380	430

	V	V1	Kg	V	V1	Kg	C	Input	I	F	F1	F2	Type	Input	Kg
314M L1	—	—	—	—	—	—	120	L		—	—	—	—	—	—
314M L2	377	80	50	457	80	63	88	C		195	147	1/4 G	6	B	28
314M L3	307	60	23	357	60	28	45	B		145	95	1/4 G	5	B	16
314M L4	239	48	15	276	48	17	37	A	532	105	65	1/4 G	5	A	10

314M L

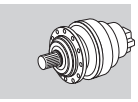

Metric

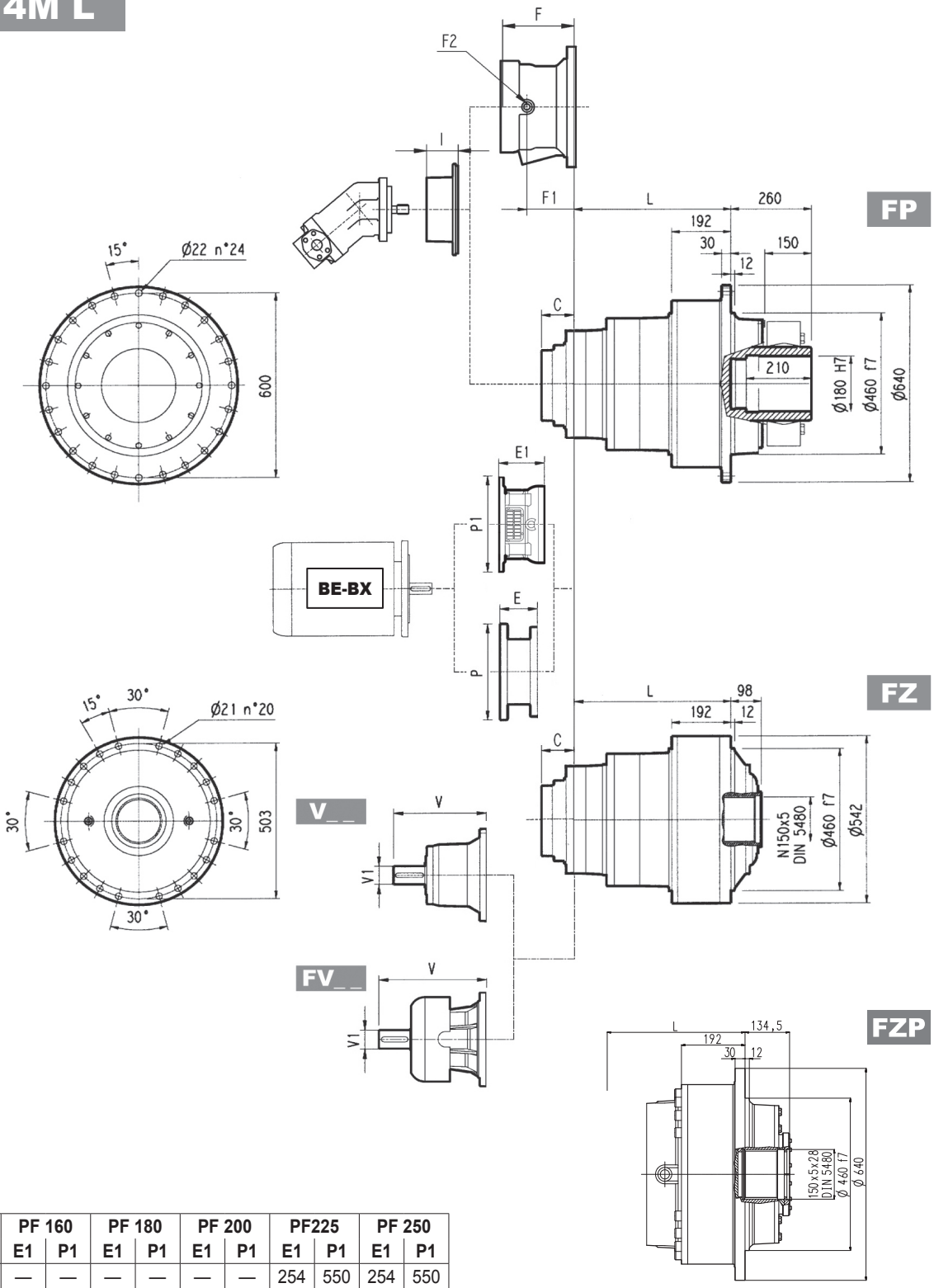

	PF 160		PF 180		PF 200		PF225		PF 250	
	E1	P1	E1	P1	E1	P1	E1	P1	E1	P1
314M L2	—	—	—	—	—	—	254	550	254	550
314M L3	—	—	167	390	197	400	197	450	207	550
314M L4	165	400	165	400	195	400	197	450	—	—

NOTE: for R design contact Bonfiglioli Technical Service

FP	**T_{2max} = 1,017,840 lb•in**

Dimensions are in mm

	P132		P160		P180		P200		P225		P250	
	E	P	E	P	E	P	E	P	E	P	E	P
314M L2	—	—	—	—	—	—	271	400	301	450	281	550
314M L3	—	—	153	350	153	350	183	400	213	450	193	550
314M L4	114	300	144	350	144	350	174	400	—	—	—	—

314M R

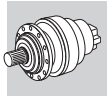

Metric

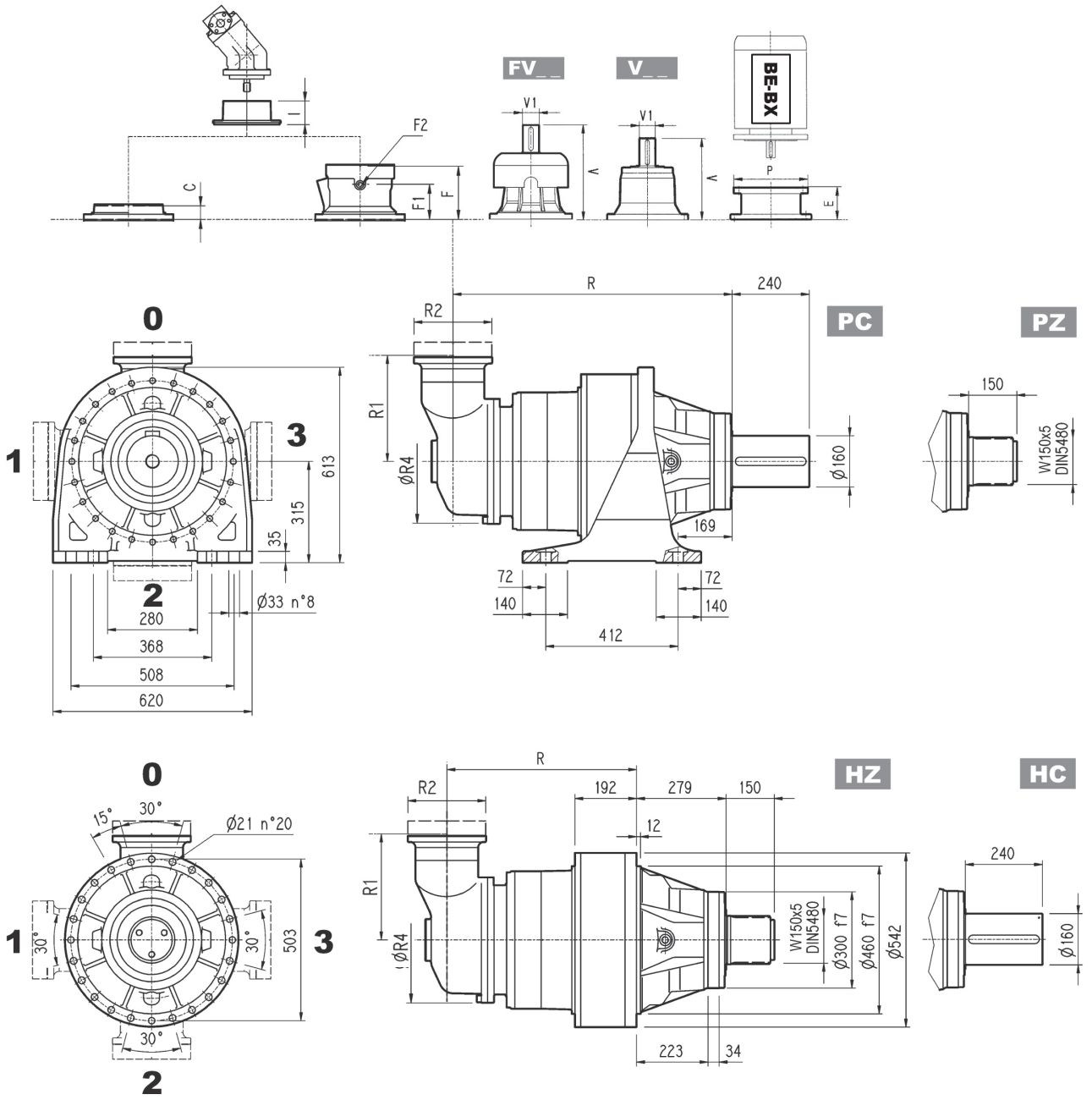

Dimensions are in mm

	R				R1	R2	R4	Kg			
	PC-PZ	HC-HZ	FZ - FZP	FP				PC-PZ	HC-HZ	FZ - FZP	FP
314M R3 (B)	848	569	569	569	345	292	400	720	590	500	550
314M R3 (C)	856	587	587	587	390	292	480	730	600	510	560
314M R4	914	635	635	635	140	186	244	680	550	460	510

	V	V1	Kg	V	V1	Kg	V	V1	Kg	C	Input	I	F	F1	F2	Type	Input	Kg
314M R3 (B)	307	60	23	—	—	—	357	60	28	45	B		195	147	1/4 G	6	B	28
314M R3 (C)	307	60	23	—	—	—	357	60	28	45	B		195	147	1/4 G	6	B	28
314M R4	137.5	24	6	158	38	7	—	—	—	37	A	532	105	65	1/4 G	4	A	10

314M R

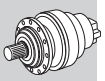

Metric

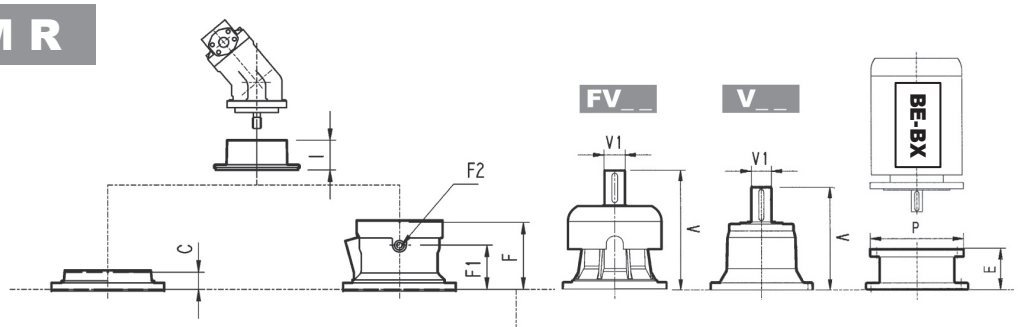

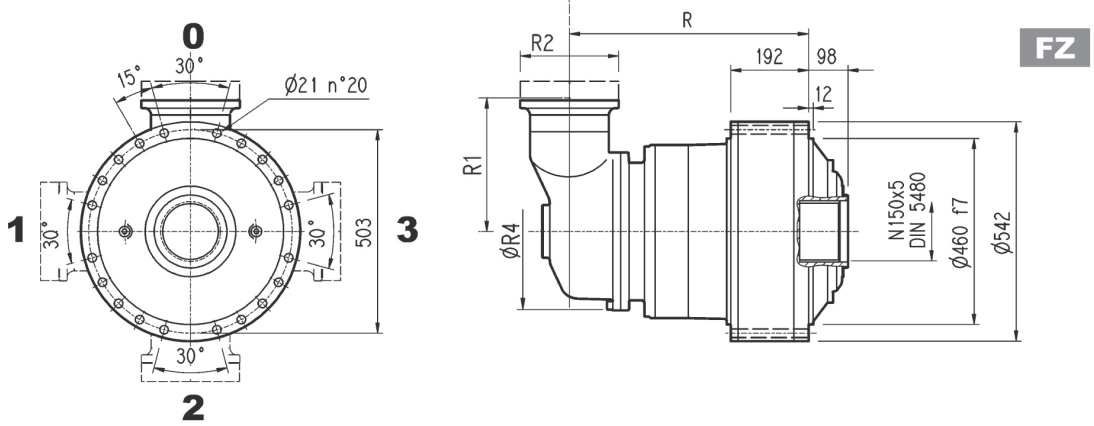

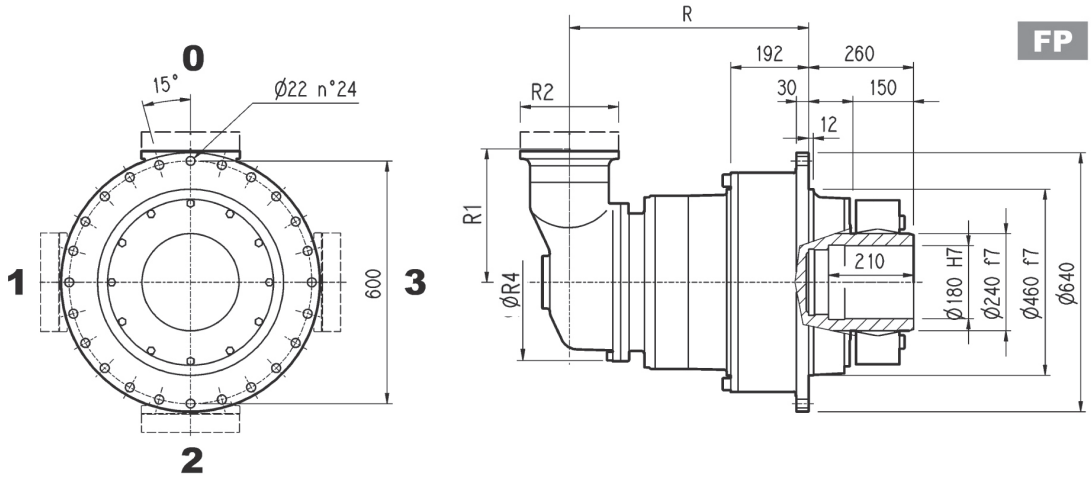

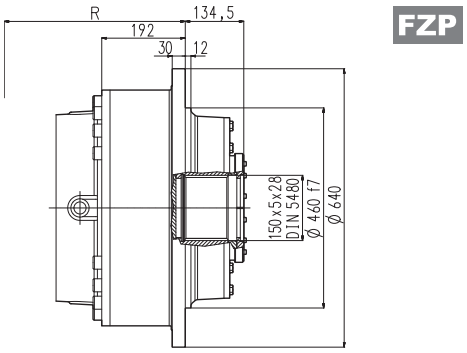

FP	T_{2max} = 1,017,840 lb•in

Dimensions are in mm

	P71		P80		P90		P100		P112		P132		P160		P180		P200		P225		P250	
	E	P	E	P	E	P	E	P	E	P	E	P	E	P	E	P	E	P	E	P	E	P
314M R3 (B)	—	—	—	—	—	—	—	—	—	—	—	—	—	—	152	350	182	400	212	450	193	550
314M R3 (C)	—	—	—	—	—	—	—	—	—	—	—	—	—	—	152	350	182	400	212	450	193	550
314M R4	65	160	84	200	84	200	94	250	94	250	114	300	144	350	—	—	—	—	—	—	—	—

Bonfiglioli Riduttori

314M L

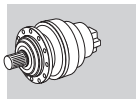

Imperial

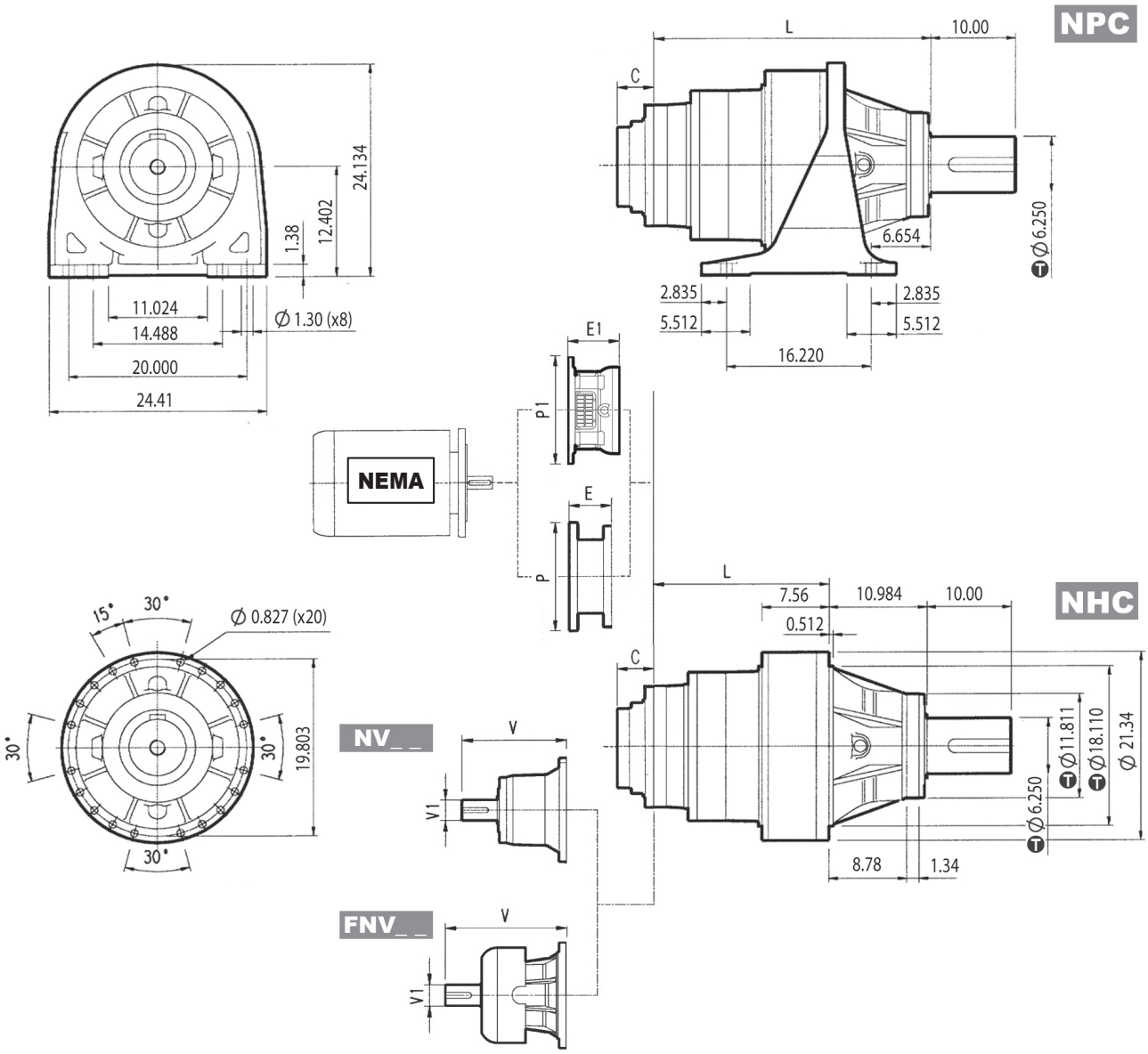

inch	Ⓣ
18.110	-0.00268 -0.00516
11.811	-0.00220 -0.00425
6.250	+0.00157 +0.00059

	PF N250TC		PF N280TC		PF N320TC		PF N360TC	
	E1	P1	E1	P1	E1	P1	E1	P1
314M L2	—	—	—	—	—	—	12.598	21.654
314M L3	—	—	8.740	15.354	9.921	15.748	10.315	17.717
314M L4	8.661	15.748	8.661	15.748	9.843	15.748	10.236	17.717

NOTE: for R design contact Bonfiglioli Technical Service
for PF N400TC contact Bonfiglioli Technical Service

Dimensions are in Inch except when shown in *italic [mm]*

	L		lbs	
	NPC	NHC	NPC	NHC
314M L1	—	—	—	—
314M L2	25.236	14.252	1225	930
314M L3	30.591	19.606	1326	1030
314M L4	33.150	22.165	1348	1050

	V	V1	lbs	V	V1	lbs	C	Input
314M L1	—	—	—	—	—	—	4.724	L
314M L2	14.724	3.000	110.3	17.874	3.000	130.0	3.465	C
314M L3	12.703	2.375	50.7	14.652	2.375	58.0	1.772	B
314M L4	9.681	1.875	33.1	11.138	1.875	38.0	1.457	A

	N250TC		N280TC		N320TC		N360TC	
	E	P	E	P	E	P	E	P
314M L3	—	—	—	—	7.776	15.748	7.776	15.748
314M L4	5.216	11.811	6.221	13.780	—	—	—	—

314M R

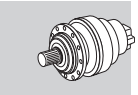

Imperial

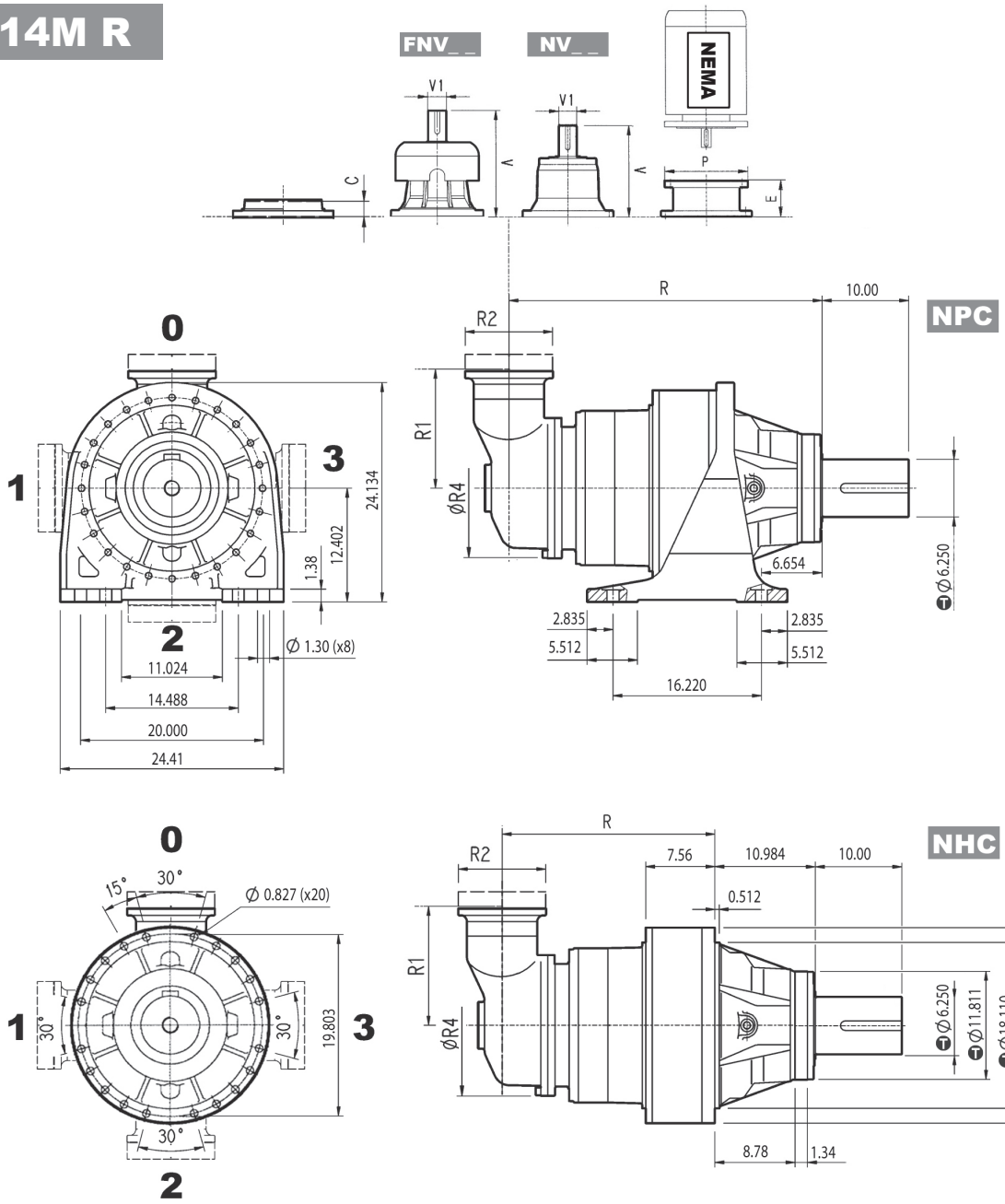

inch	T
18.110	-0.00268 -0.00516
11.811	-0.00220 -0.00425
6.250	+0.00157 +0.00059

Dimensions are in Inch except when shown in *italic [mm]*

	R		R1	R2	R4	lbs	
	NPC	NHC				NPC	NHC
314M R3 (B)	33.386	22.402	13.583	11.496	15.748	1500	1210
314M R3 (C)	33.701	23.110	15.354	11.496	18.898	1530	1240
314M R4	35.984	25.000	5.512	7.323	9.606	1420	1125

	V	V1	lbs	V	V1	lbs	V	V1	lbs	C	Input
314M R3 (B)	12.703	2.375	50.7	—	—	—	14.652	2.375	58.0	1.772	B
314M R3 (C)	12.703	2.375	50.7	—	—	—	14.652	2.375	58.0	1.772	B
314M R4	5.996	1.125	13.2	6.437	1.625	15.4	—	—	—	1.457	A

	N250TC		N280TC		N320TC		N360TC	
	E	P	E	P	E	P	E	P
314M R3 (B)	—	—	—	—	7.776	13.780	7.776	13.780
314M R3 (C)	—	—	—	—	7.776	13.780	7.776	13.780
314M R4	5.216	8.819	6.122	11.811	—	—	—	—

Bonfiglioli Riduttori

3/V 14M L3

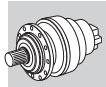

Metric

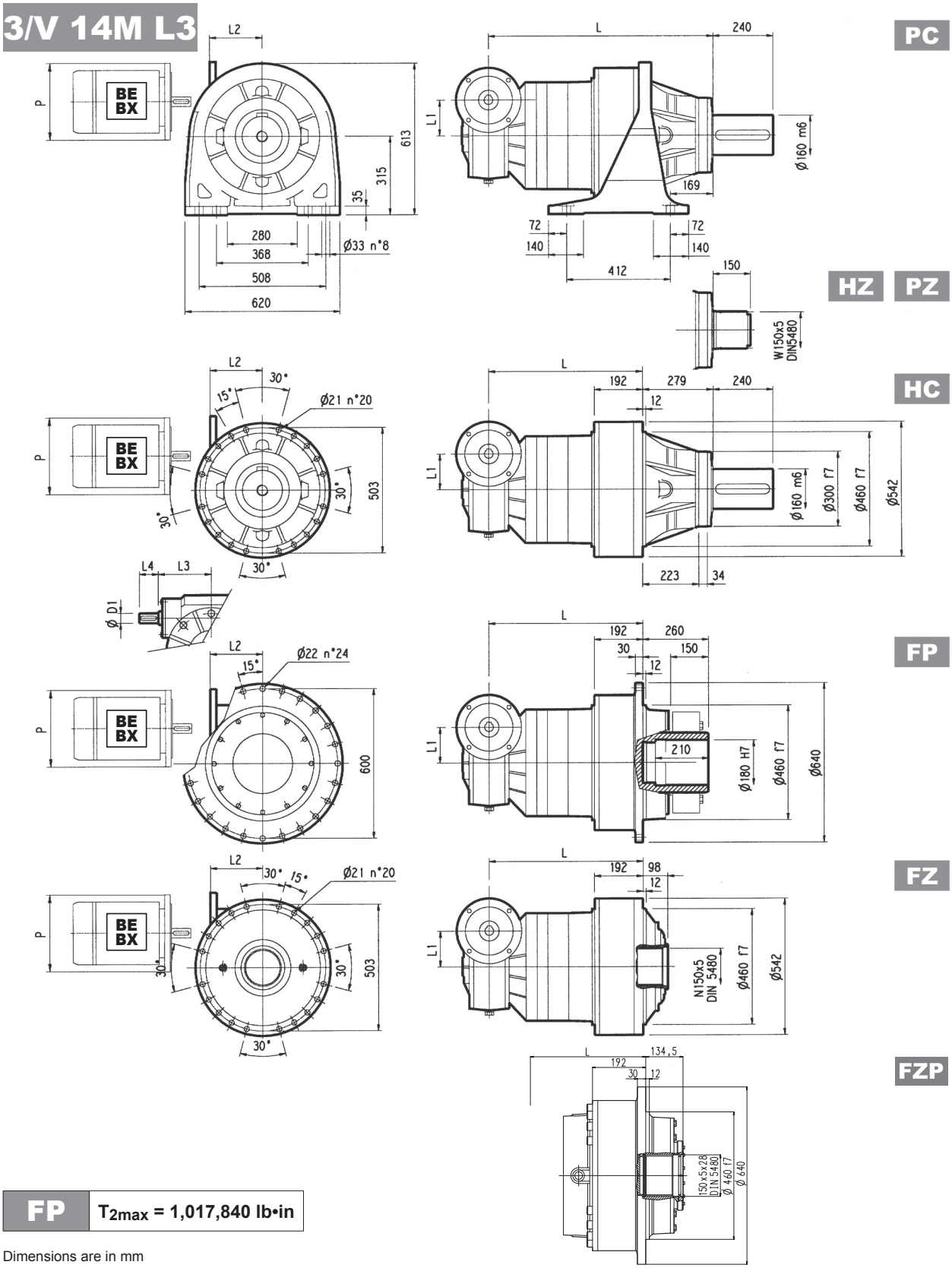

FP	T_{2max} = 1,017,840 lb•in

Dimensions are in mm

	L				L1	L2	D1	L3	L4	Kg			
	PC - PZ	HC - HZ	FZ - FZP	FP						PC - PZ	HC - HZ	FZ - FZP	FP
3/V 14M L3	920	641	641	641	185	217	40	214.5	70	665	535	445	495

	P100	P112	P132		P160		P180	
	P	P	L2	P	L2	P	L2	P
3/V 14M L3	250	250	—	300	—	350	—	350

3/V 14M L4

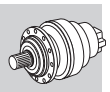

Metric

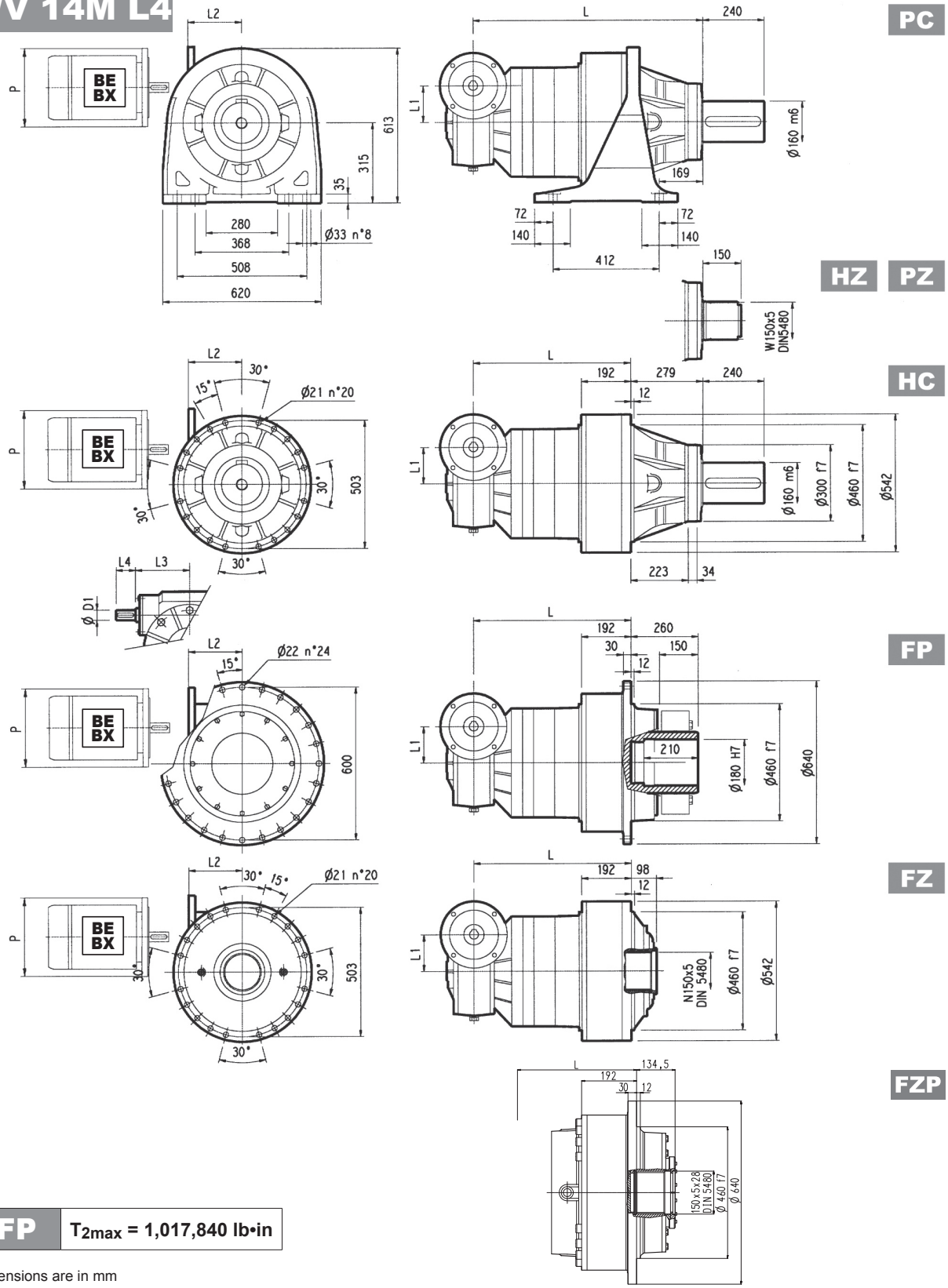

FP	T_{2max} = 1,017,840 lb•in

Dimensions are in mm

	L				L1	L2	D1	L3	L4	Kg			
	PC - PZ	HC - HZ	FZ - FZP	FP						PC - PZ	HC - HZ	FZ - FZP	FP
3/V 14M L4	961	682	682	682	150	190	35	185	65	690	560	470	520

	P100	P112	P132		P160		P180	
	P	P	L2	P	L2	P	L2	P
3/V 14M L4	250	250	—	300	—	350	—	—

Bonfiglioli Riduttori

314M L | 314M R | 3/V 14M L

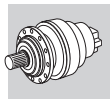

Metric

Imperial

HC

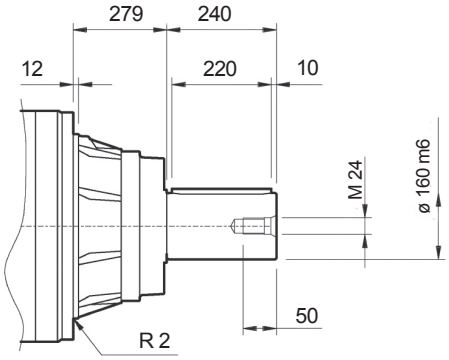

PC

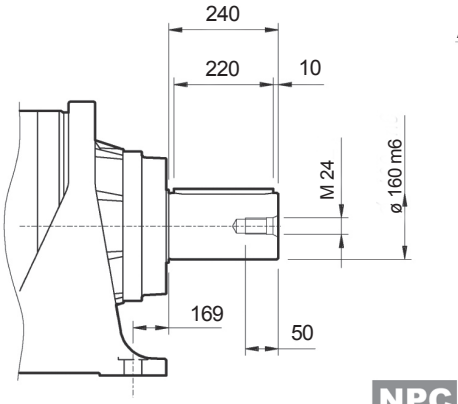

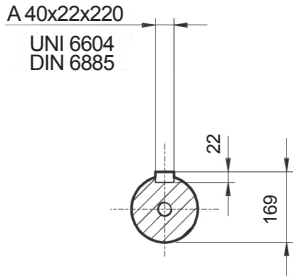

NHC

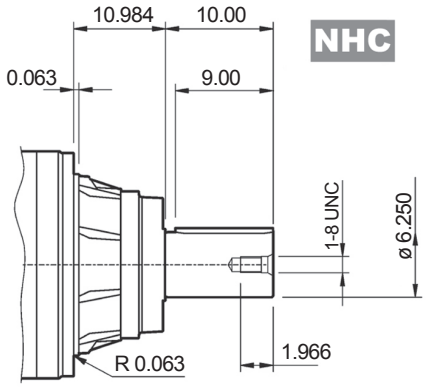

NPC

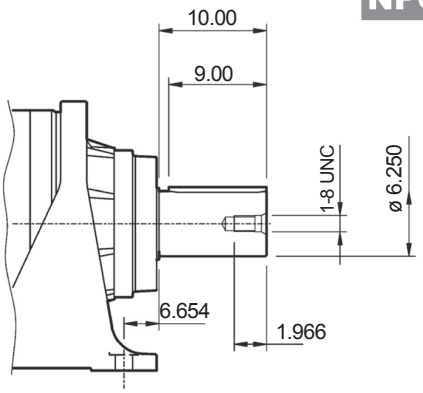

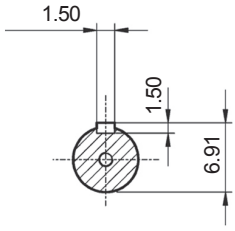

HZ

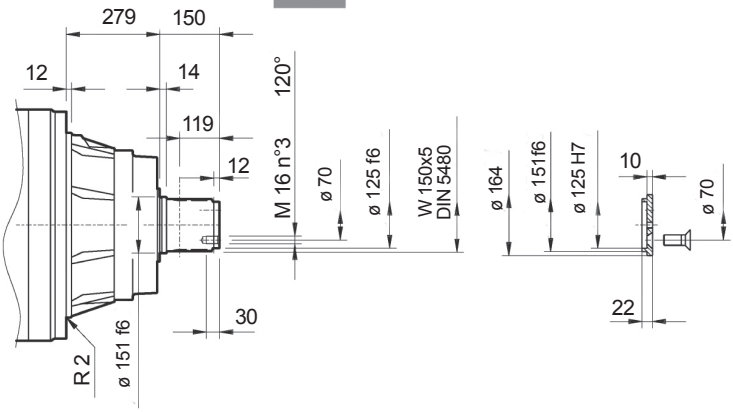

FZ

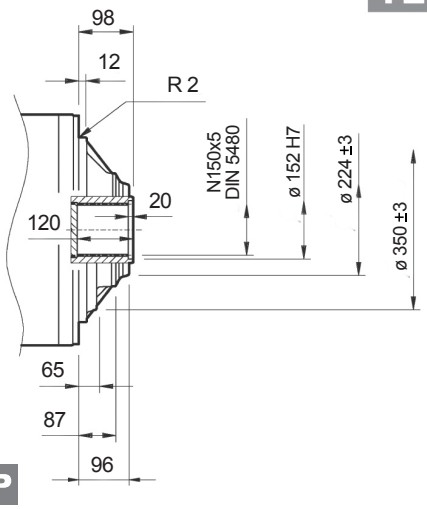

FP

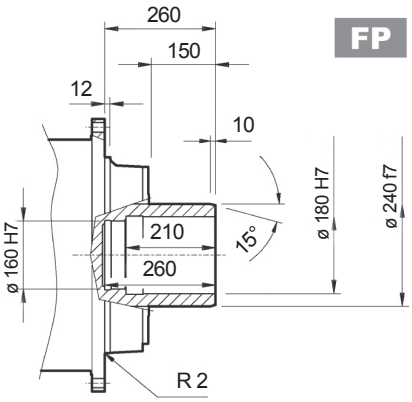

FZP

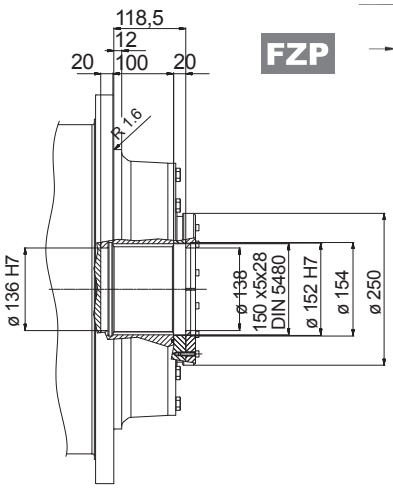

FP	T_{2max} = 1,017,840 lb•in

Dimensions are in mm when shown in italic, otherwise dimensions are in inches

inch	T
6.250	+0.00157 +0.00059

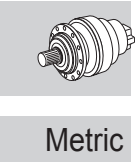

Flange

W0A

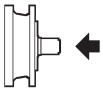

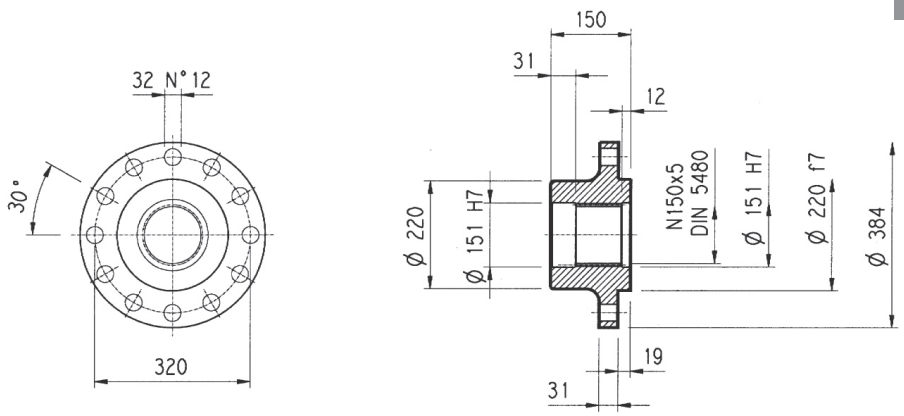

Material: Steel C40

Dimensions are in mm

Pinions

P...

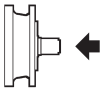

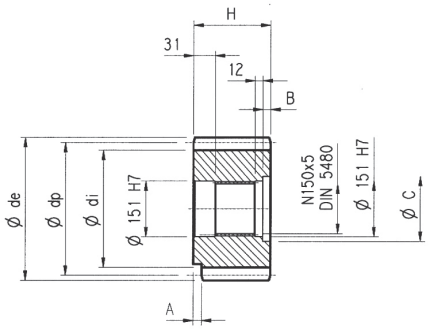

α = 20°

Dimensions are in mm

	m	z	x	dp	di	de	H	A	B	C	Material
PRG1	18	16	0.500	288	261	342	160	—	10	166	Steel 18NiCrMo5 case hardened
PRG2	18	16	0.617	288	271	339	150	30	—	—	Steel 39NiCrMo3 hardened and tempered

Sleeve coupling

M0A

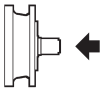

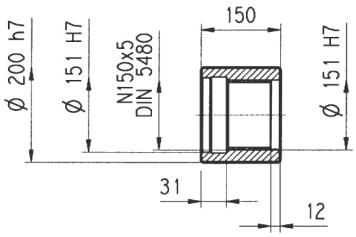

Material: Steel 16CrNi4

Dimensions are in mm

Splined bars

B0A

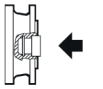

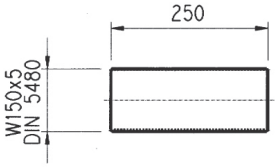

Material: Case hardening steel 18NiCrMo5 UNI 5331
must be case hardened 50-55 HRC

Shrink disc

G0A

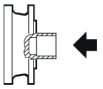

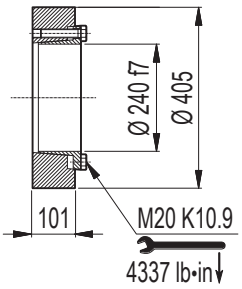

Dimensions are in mm

314M L 314M R

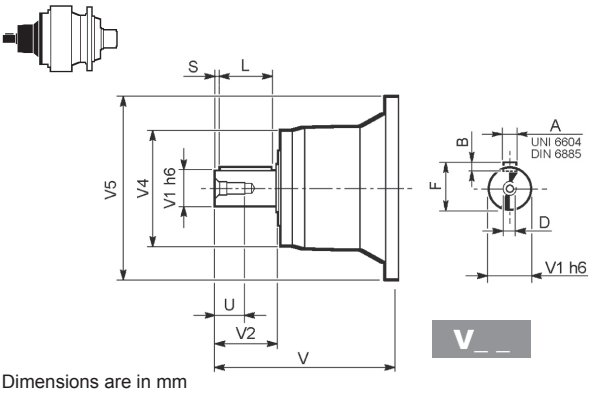

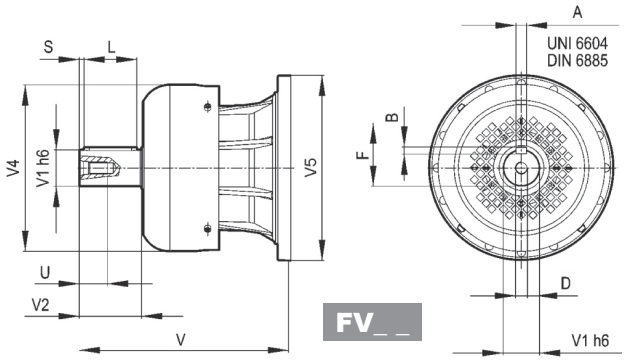

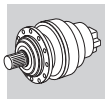

Metric

Dimensions are in mm

		V	V1	V2	V4	V5	A	B	F	L	S	D	U
314M L2	**V10B**	377	80	130	200	400	22	14	85	110	10	M16	36
	FV10B	457	80	130	347.5	400	22	14	85	110	10	M16	36
314M L3	**V06B**	307	60	105	155	292	18	11	64	90	7.5	M16	36
	FV06B	357	60	105	309	292	18	11	64	90	7.5	M16	36
314M L4	**V05B**	239	48	82	155	245	14	9	51.5	70	6	M16	36
	FV05B	276	48	82	219.5	244	14	9	51.5	70	6	M16	36
314M R3 (B) (C)	**V06B**	307	60	105	155	292	18	11	64	90	7.5	M16	36
	FV06B	357	60	105	309	292	18	11	64	90	7.5	M16	36
314M R4	**V01A**	137.5	24	36	120	186	8	7	27	30	3	M8	19
	V01B	158	38	58	120	186	10	8	41	50	4	M12	28

314M L 314M R

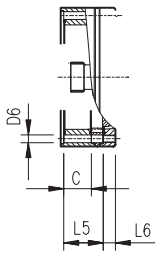

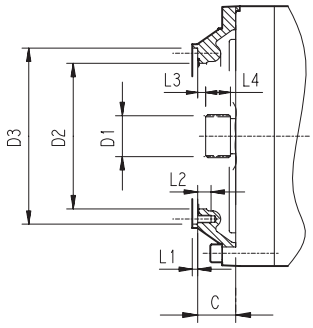

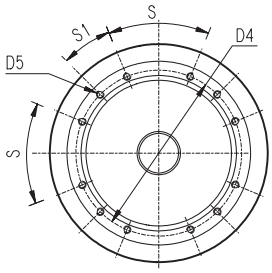

Dimensions are in mm

		C	D1	D2	D3	D4	D5	D6	L1	L2	L3	L4	L5	L6	S	S1	Input
314M L1	**V9AL**	120	100x94 DIN 5482	295	336 H7	370	M16 n°15	—	8	21	13	55	—	—	24°	24°	L
314M L2	**V9AC**	88	70x64 DIN 5482	200	282 H7	266	M12 n°12	—	4	22	11	32	—	—	45°	45°	C
314M L3	**V9AB**	45	58x53 DIN 5482	195	236 H7	222	M10 n°12	—	4	18	11	22	—	—	45°	22.5°	B
314M L4	**V9AA**	37	40x36 DIN 5482	140	178 H7	165	M10 n°8	—	4	18	9	18	—	—	45°	45°	A
314M R3 (B) (C)	**V9AB**	45	58x53 DIN 5482	195	236 H7	222	M10 n°12	—	4	18	11	22	—	—	45°	22.5°	B
314M R4	**V9AA**	37	40x36 DIN 5482	140	178 H7	165	M10 n°8	11	4	—	9	18	37	18	45°	45°	A

3/V 14M L

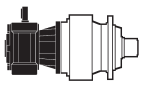

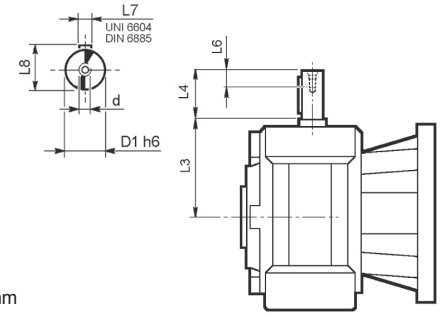

Dimensions are in mm

	D1 h6	L3	L4	L6	L7	L8	d
3/V 14M L3_HS	40	214.5	70	20	12	43	M8
3/V 14M L4_HS	35	185	65	20	10	38	M8

314M L 314M R

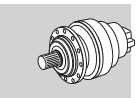

Imperial

inch	Ⓣ
3.000	0 -0.00075
2.375	0 -0.00053
1.875	0 -0.00053
1.625	0 -0.00053
1.125	0 -0.00051

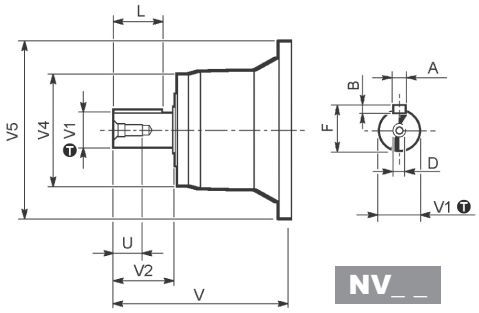

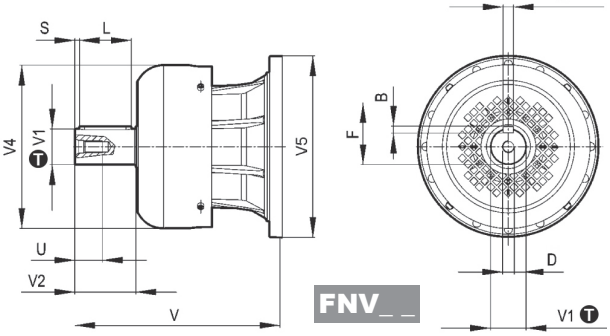

Dimensions are in Inch except when shown in *italic [mm]*

		V	V1	V2	V4	V5	A	B	F	L	D	U
314M L2	**NV10B**	14.724	3.000	5.000	7.165	15.748	0.750	0.750	3.328	4.374	3/4-10 UNC	1.654
	FNV10B	17.874	3.000	5.000	13.677	15.748	0.750	0.750	3.328	4.374	3/4-10 UNC	1.654
314M L3	**NV06B**	12.703	2.375	4.750	6.417	11.496	0.625	0.625	2.646	4.252	3/4-10 UNC	1.654
	FNV06B	14.652	2.375	4.750	12.165	11.496	0.625	0.625	2.646	4.252	3/4-10 UNC	1.654
314M L4	**NV05B**	9.681	1.875	3.500	6.417	9.606	0.500	0.500	2.091	3.000	5/8-11 UNC	1.417
	FNV05B	11.138	1.875	3.500	8.641	9.606	0.500	0.500	2.091	3.000	5/8-11 UNC	1.417
314M R3 (B) (C)	**NV06B**	12.703	2.375	4.750	6.417	11.496	0.625	0.625	2.646	4.252	3/4-10 UNC	1.654
	FNV06B	14.652	2.375	4.750	12.165	11.496	0.625	0.625	2.646	4.252	3/4-10 UNC	1.654
314M R4	**NV01A**	5.996	1.125	2.000	4.980	7.323	0.250	0.250	1.236	1.752	3/8-16 UNC	0.866
	NV01B	6.437	1.625	2.500	4.980	7.323	0.375	0.375	1.791	2.000	1/2-13 UNC	1.102

314M L 314M R

inch	Ⓣ
13.23	+0.00224 0
11.10	+0.00204 0
9.29	+0.00181 0
7.01	+0.00157 0

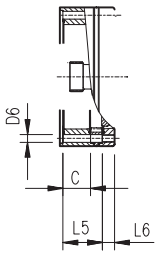

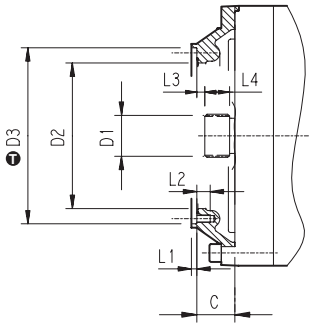

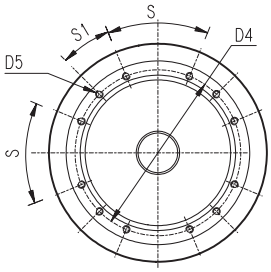

Dimensions are in Inch except when shown in *italic [mm]*

		C	D1	D2	D3	D4	D5	D6	L1	L2	L3	L4	L5	L6	S	S1	Input
314M L1	**V9AL**	4.72	*100x94 DIN 5482*	11.61	13.23	14.57	*M16 n°15*	—	0.31	0.83	0.51	2.17	—	—	24°	24°	L
314M L2	**V9AC**	3.46	*70x64 DIN 5482*	7.87	11.10	10.47	*M12 n°12*	—	0.16	0.87	0.43	1.26	—	—	45°	45°	C
314M L3	**V9AB**	1.77	*58x53 DIN 5482*	7.68	9.29	8.74	*M10 n°12*	—	0.16	0.71	0.43	0.87	—	—	45°	22.5°	B
314M L4	**V9AA**	1.46	*40x36 DIN 5482*	5.51	7.01	6.50	*M10 n°8*	—	0.16	0.71	0.35	0.71	—	—	45°	45°	A
314M R3 (B) (C)	**V9AB**	1.77	*58x53 DIN 5482*	7.68	9.29	8.74	*M10 n°12*	—	0.16	0.71	0.43	0.87	—	—	45°	22.5°	B
314M R4	**V9AA**	1.46	*40x36 DIN 5482*	5.51	7.01	6.50	*M10 n°8*	0.43	0.16	—	0.35	0.71	1.46	0.71	45°	45°	A

Bonfiglioli Riduttori

Permissible radial and axial loads on output shaft with $Fh_2 : n_2 \cdot h = 100000$

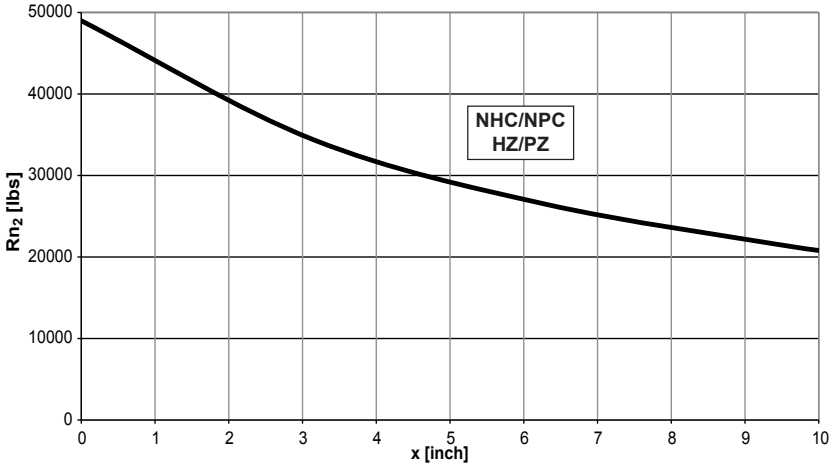

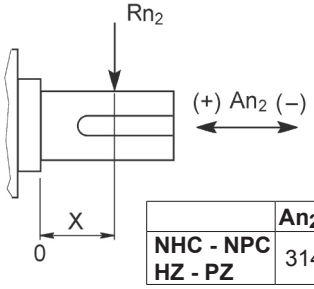

	An2 (+)	An2 (-)
NHC - NPC HZ - PZ	31472	23604

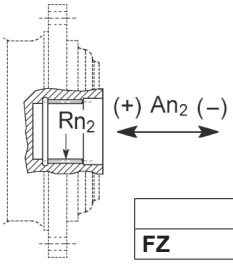

	Rn2	An2 (+/-)
FZ	9391	9391

Load corrective factor fh_2 on shafts	$Fh_2 = n_2 \cdot h$		10000	25000	50000	100000	500000	1000000
	fh_2	FZ	**2.15**	**1.59**	**1.26**	**1.00**	**0.58**	**0.46**
		NHC - NPC - HZ -PZ	**2.00**	**1.52**	**1.23**	**1.00**	**0.62**	**0.50**

Permissible radial loads on input shaft with $Fh_1 : n_1 \cdot h = 250000$

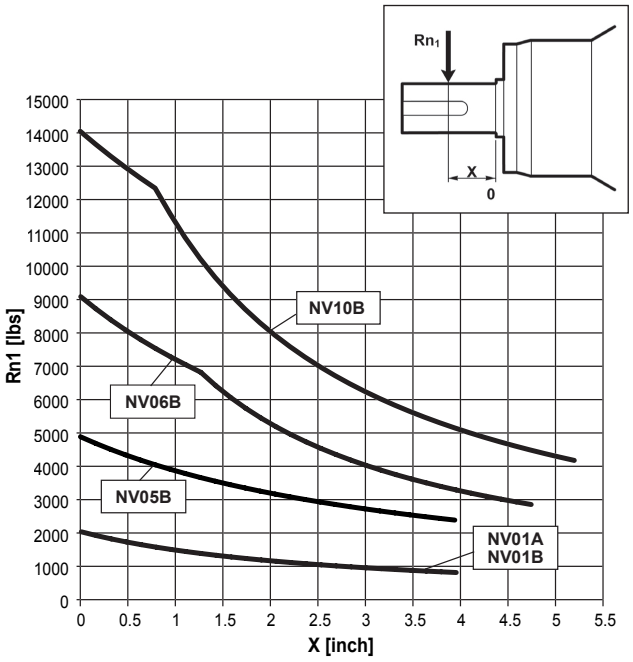

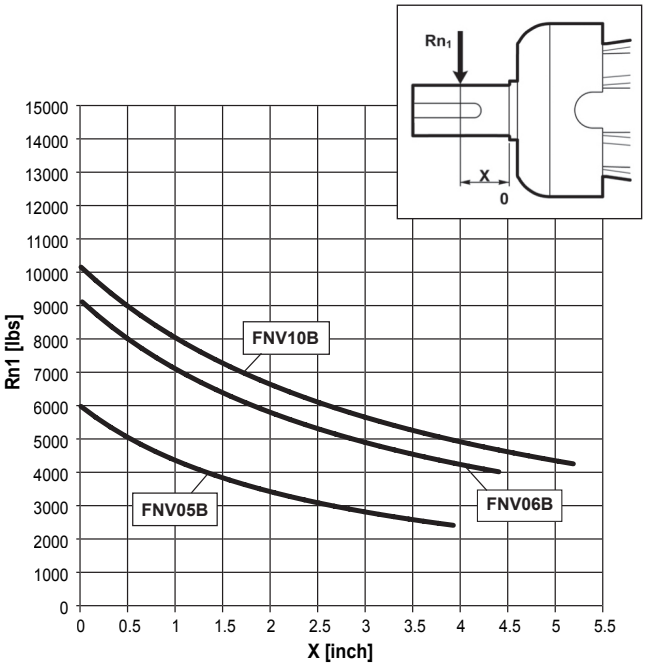

Load corrective factor fh_1 on shafts	$Fh_1 = n_1 \cdot h$	250000	500000	1000000	2000000	5000000	10000000
	fh_1	**1**	**0.79**	**0.63**	**0.50**	**0.37**	**0.29**

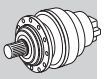

314M VK

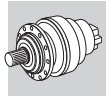

Metric

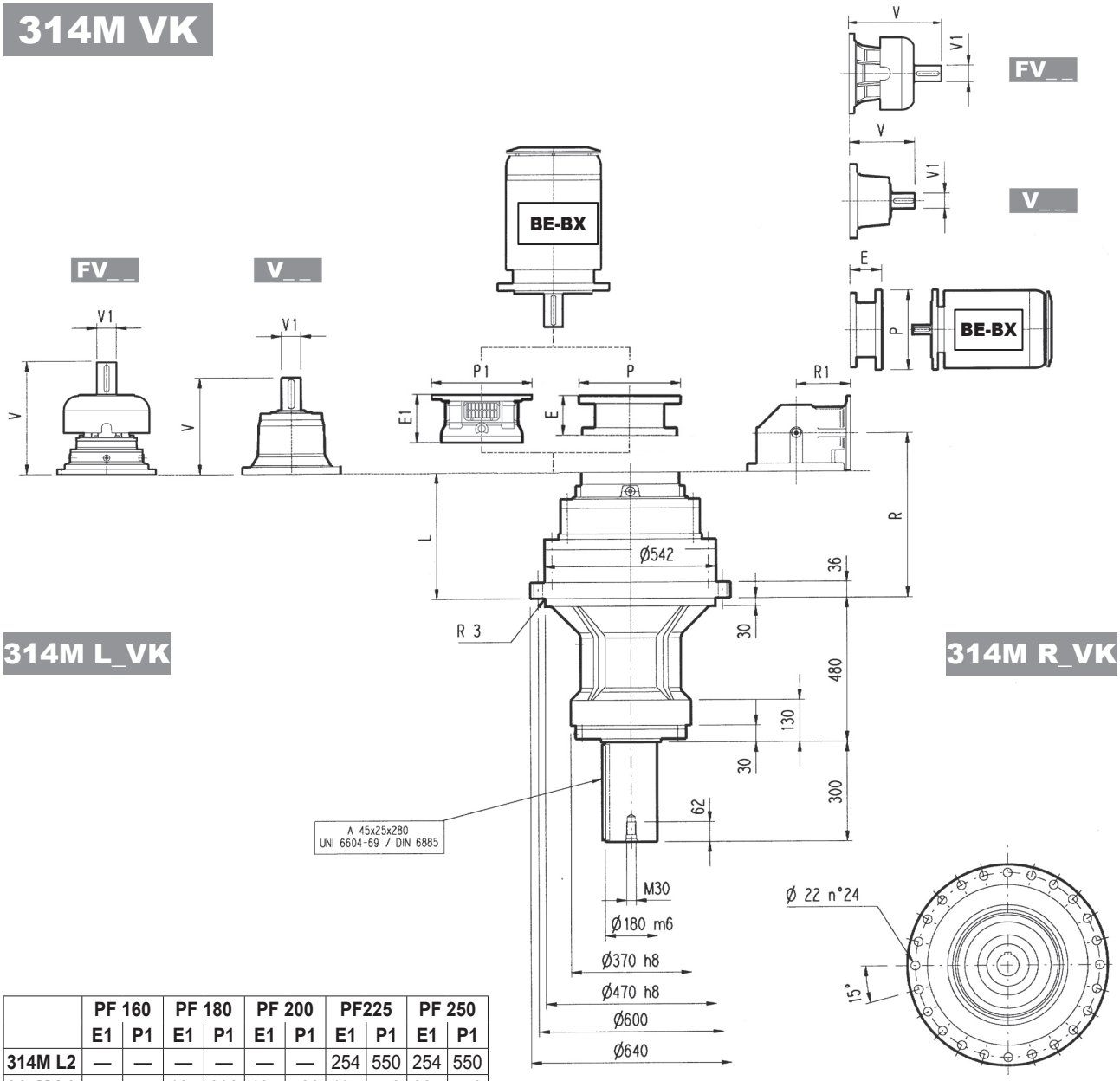

	PF 160		PF 180		PF 200		PF225		PF 250	
	E1	P1	E1	P1	E1	P1	E1	P1	E1	P1
314M L2	—	—	—	—	—	—	254	550	254	550
314M L3	—	—	167	390	197	400	197	450	207	550
314M L4	165	400	165	400	195	400	197	450	—	—

NOTE: for R design contact Bonfiglioli Technical Service

Dimensions are in mm

	L	Kg	V	V1	Kg	V	V1	Kg	V	V1	Kg	V	V1	Kg	P132		P160		P180		P200		P225		P250	
															E	P	E	P	E	P	E	P	E	P	E	P
314M L2	386	650	348	80	55	—	—	—	457	80	63	—	—	—	—	—	—	—	—	—	271	400	301	450	281	550
314M L3	519	700	315	80	35	313	60	28	357	60	28	—	—	—	—	—	153	350	153	350	183	400	213	450	193	550
314M L4	608	710	239	48	15	—	—	—	276	48	17	—	—	—	114	300	144	350	144	350	174	400	—	—	—	—

	R	R1	Kg	V	V1	Kg	V	V1	Kg	V	V1	Kg	V	V1	Kg
314M R3 (B)	611	345	720	307	60	23	—	—	—	357	60	28	—	—	—
314M R3 (C)	611	390	730	307	60	23	—	—	—	357	60	28	—	—	—
314M R4	638	225	690	137.5	24	6	158	38	7	—	—	—	—	—	—

	P71		P80		P90		P100		P112		P132		P160		P180		P200		P225		P250	
	E	P	E	P	E	P	E	P	E	P	E	P	E	P	E	P	E	P	E	P	E	P
314M R3 (B)	—	—	—	—	—	—	—	—	—	—	—	—	—	—	152	350	182	400	212	450	193	550
314M R3 (C)	—	—	—	—	—	—	—	—	—	—	—	—	—	—	152	350	182	400	212	450	193	550
314M R4	65	160	84	200	84	200	94	250	94	250	114	300	144	350	—	—	—	—	—	—	—	—

314M VK

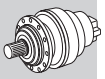

Metric

The diagram below allows the calculation of permitted overhung load R_{x2} on the output shaft of gearbox, with radial force applying at a distance x from shaft shoulder.
The curves are relevant to value resulting from the relationship of trust load A_{n2} to radial load R_{n2}, based on n_2 = 10 rpm and 10000 hrs theoretical lifetime.

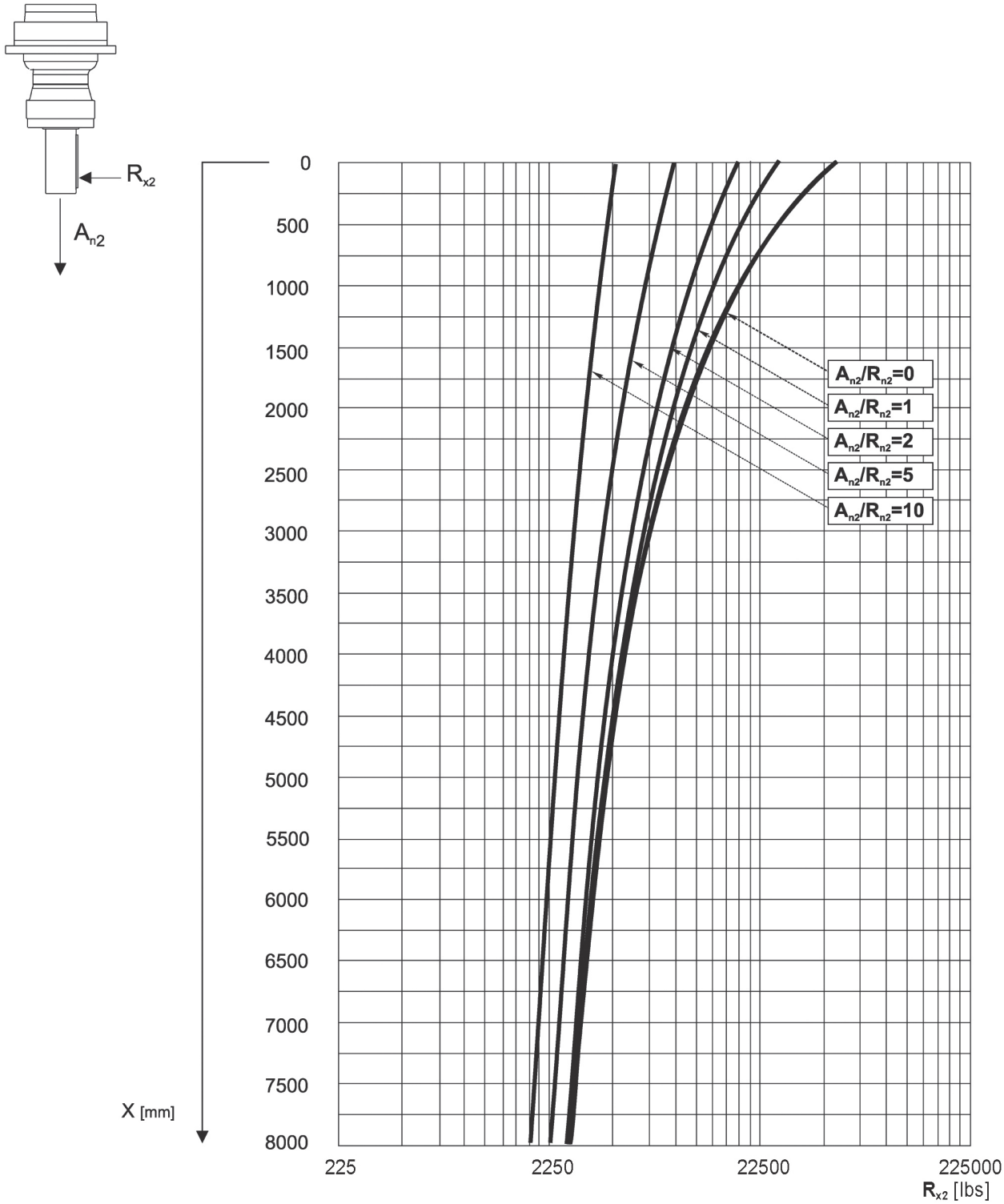

315M L

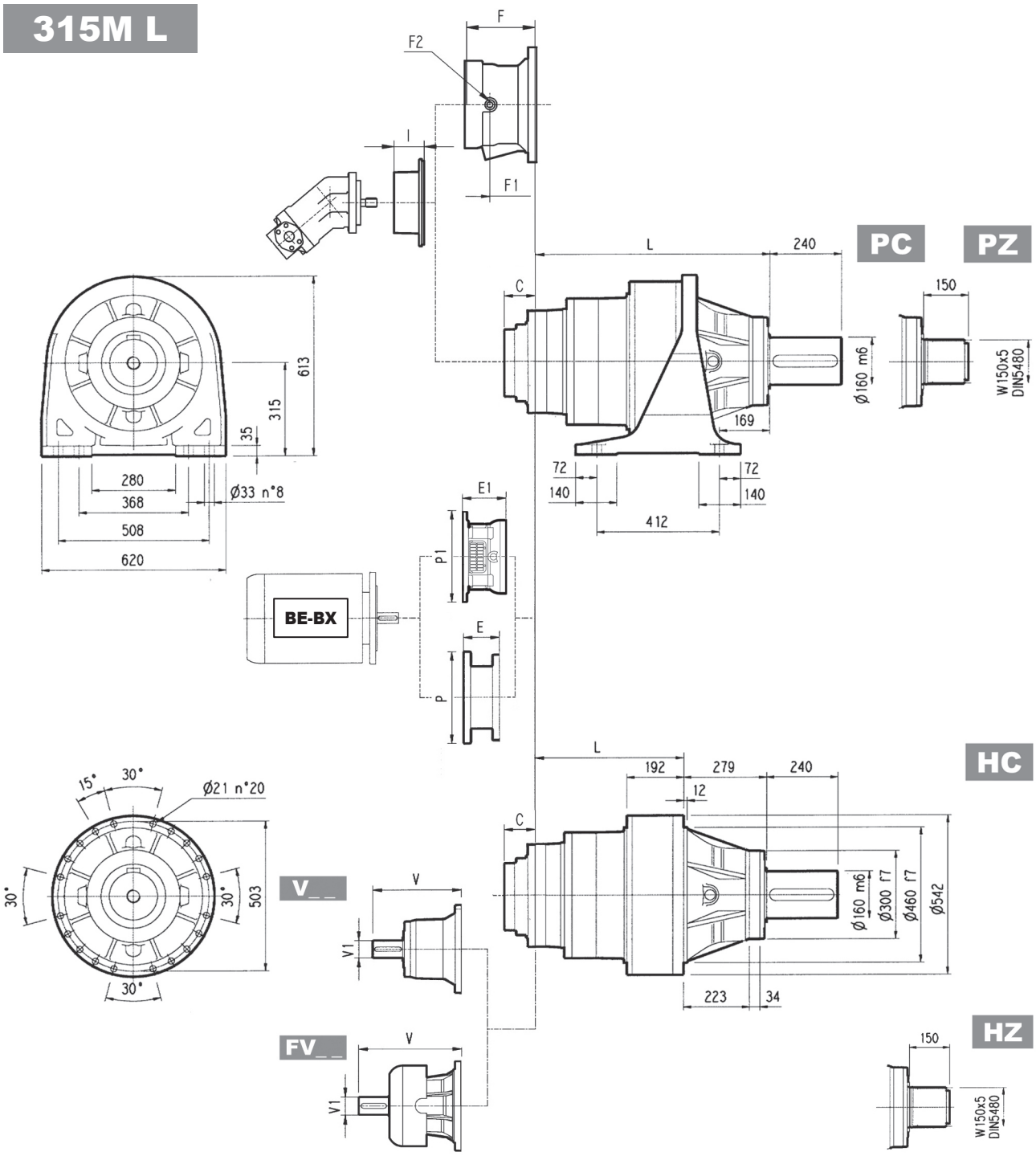

Dimensions are in mm

	L				Kg			
	PC - PZ	HC - HZ	FZ - FZP	FP	PC - PZ	HC - HZ	FZ - FZP	FP
315M L1	453	174	174	174	500	370	280	330
315M L2	665	386	386	386	585	455	365	415
315M L3	798	519	519	519	630	500	410	460
315M L4	887	608	608	608	642	512	422	472

	V	V1	Kg	V	V1	Kg	V	V1	Kg	V	V1	Kg	C	Input	I	F	F1	F2	Type	Input	Kg
315M L1	556	120	125	—	—	—	—	—	—	—	—	—	116	E		—	—	—	—	—	—
315M L2	348	80	55	—	—	—	456	80	85	—	—	—	81	D		232	185	1/4 G	6	B	35
315M L3	315	80	35	313	60	28	375	80	48	363	60	34	51	B	532	201	153	1/4 G	5	B	28
315M L4	239	48	15	—	—	—	276	48	17	—	—	—	37	A		145	95	1/4 G	5	A	16

315M L

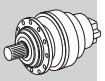

Metric

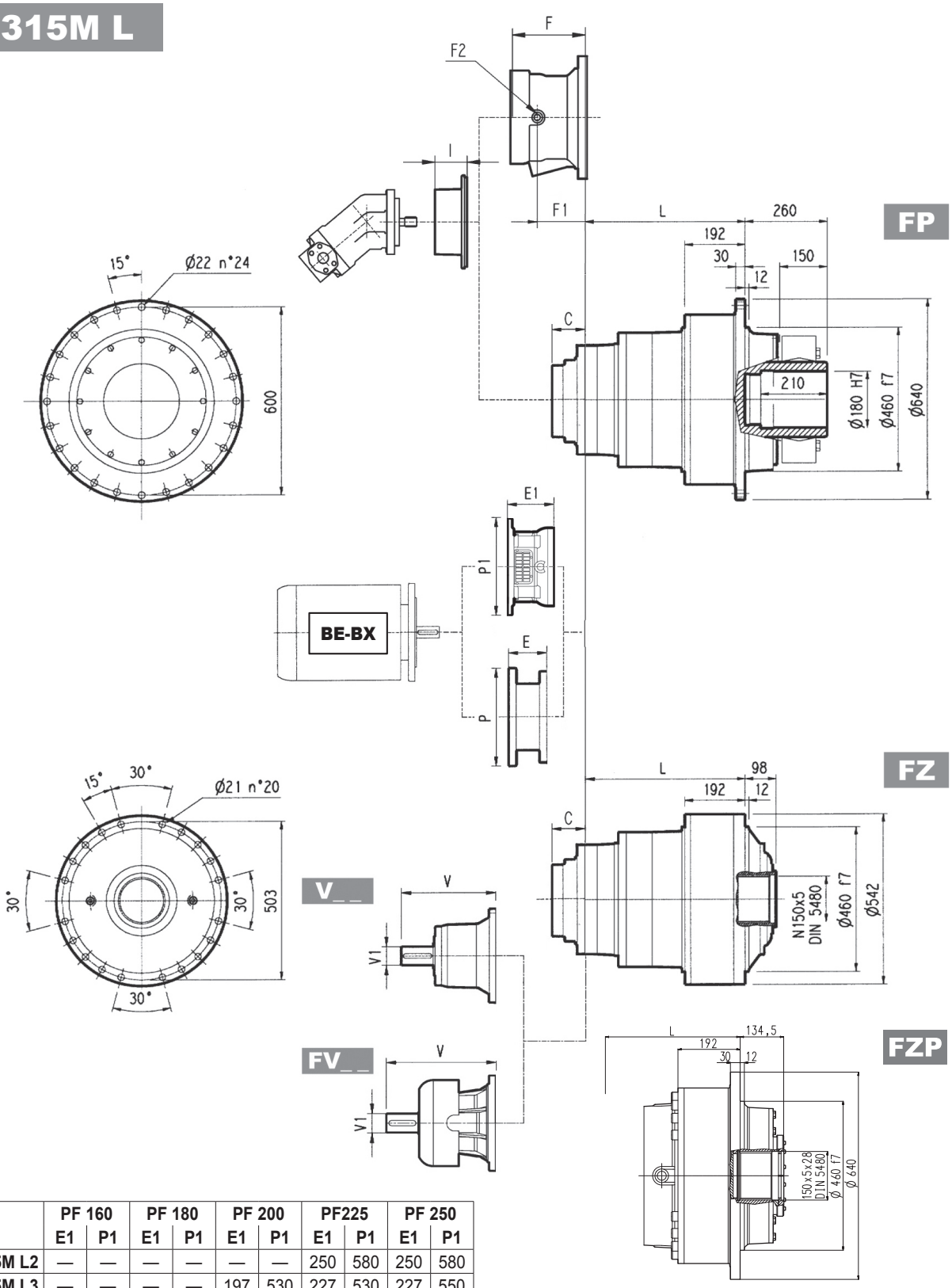

	PF 160		PF 180		PF 200		PF225		PF 250	
	E1	P1	E1	P1	E1	P1	E1	P1	E1	P1
315M L2	—	—	—	—	—	—	250	580	250	580
315M L3	—	—	—	—	197	530	227	530	227	550
315M L4	165	400	165	400	195	400	195	450	—	—

NOTE: for R design contact Bonfiglioli Technical Service

FP T_{2max} = 1,194,850 lb•in

Dimensions are in mm

	P132		P160		P180		P200		P225		P250	
	E	P	E	P	E	P	E	P	E	P	E	P
315M L2	—	—	—	—	—	—	267	400	297	450	297	550
315M L3	—	—	—	—	195	350	186	400	216	450	215	550
315M L4	114	300	144	350	144	350	174	400	—	—	—	—

315M R

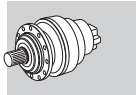

Metric

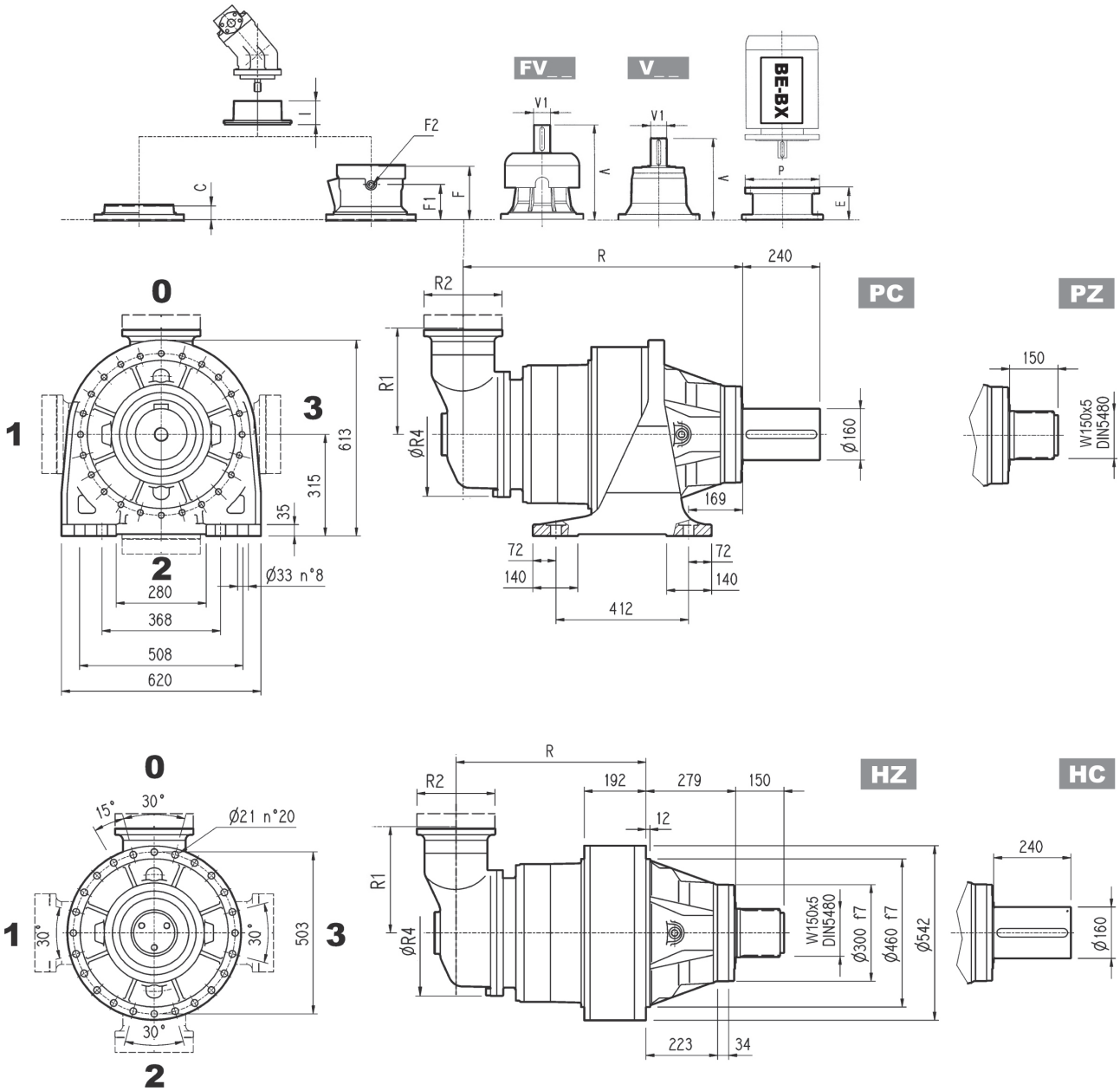

Dimensions are in mm

	R				R1	R2	R4	Kg			
	PC-PZ	HC-HZ	FZ - FZP	FP				PC-PZ	HC-HZ	FZ - FZP	FP
315M R3 (B)	890	611	611	611	345	292	400	720	590	500	550
315M R3 (C)	890	611	611	611	390	292	480	730	600	510	560
315M R4	917	638	638	638	225	245	345	680	550	460	510

	V	V1	Kg	V	V1	Kg	C	Input	I	F	F1	F2	Type	Input	Kg
315M R3 (B)	307	60	23	357	60	28	45	B		195	147	1/4 G	6	B	28
315M R3 (C)	307	60	23	357	60	28	45	B		195	147	1/4 G	6	B	28
315M R4	239	48	15	276	48	17	37	A	532	145	95	1/4 G	5	A	16

315M R

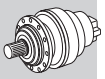

Metric

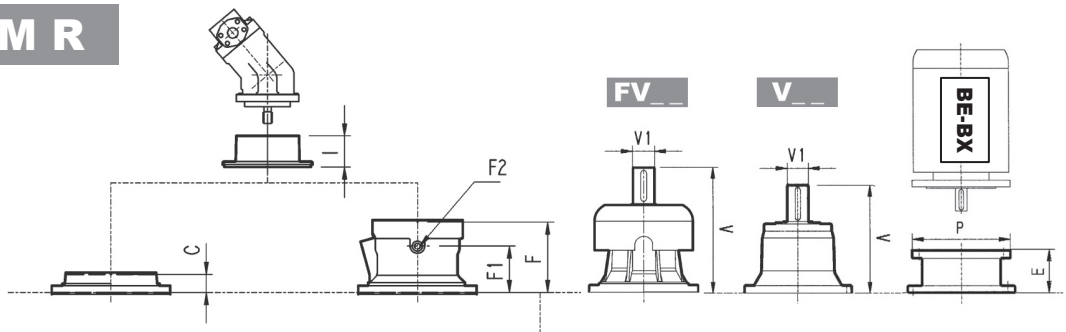

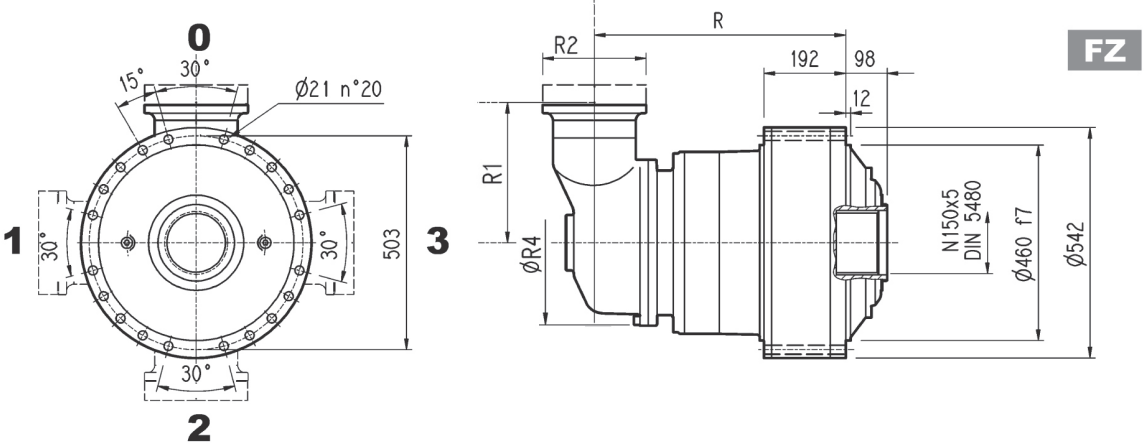

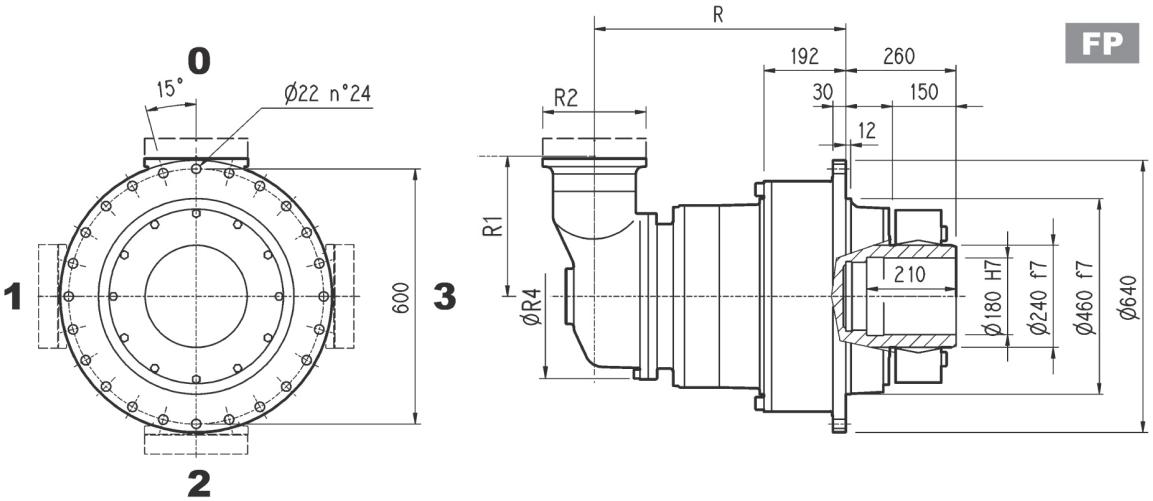

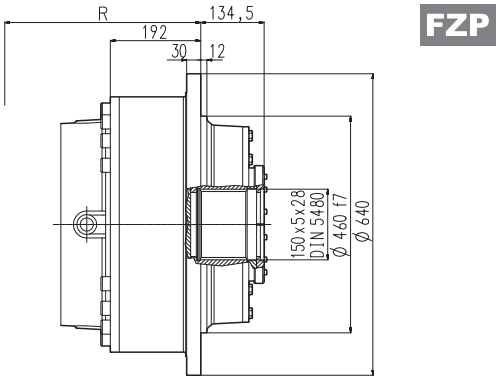

FP	T_{2max} = 1,194,850 lb•in

Dimensions are in mm

	P132		P160		P180		P200		P225		P250	
	E	P	E	P	E	P	E	P	E	P	E	P
315M R3 (B)	—	—	—	—	152	350	182	400	212	450	193	550
315M R3 (C)	—	—	—	—	152	350	182	400	212	450	193	550
315M R4	114	300	144	350	144	350	174	400	—	—	—	—

315M L

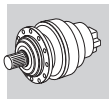

Imperial

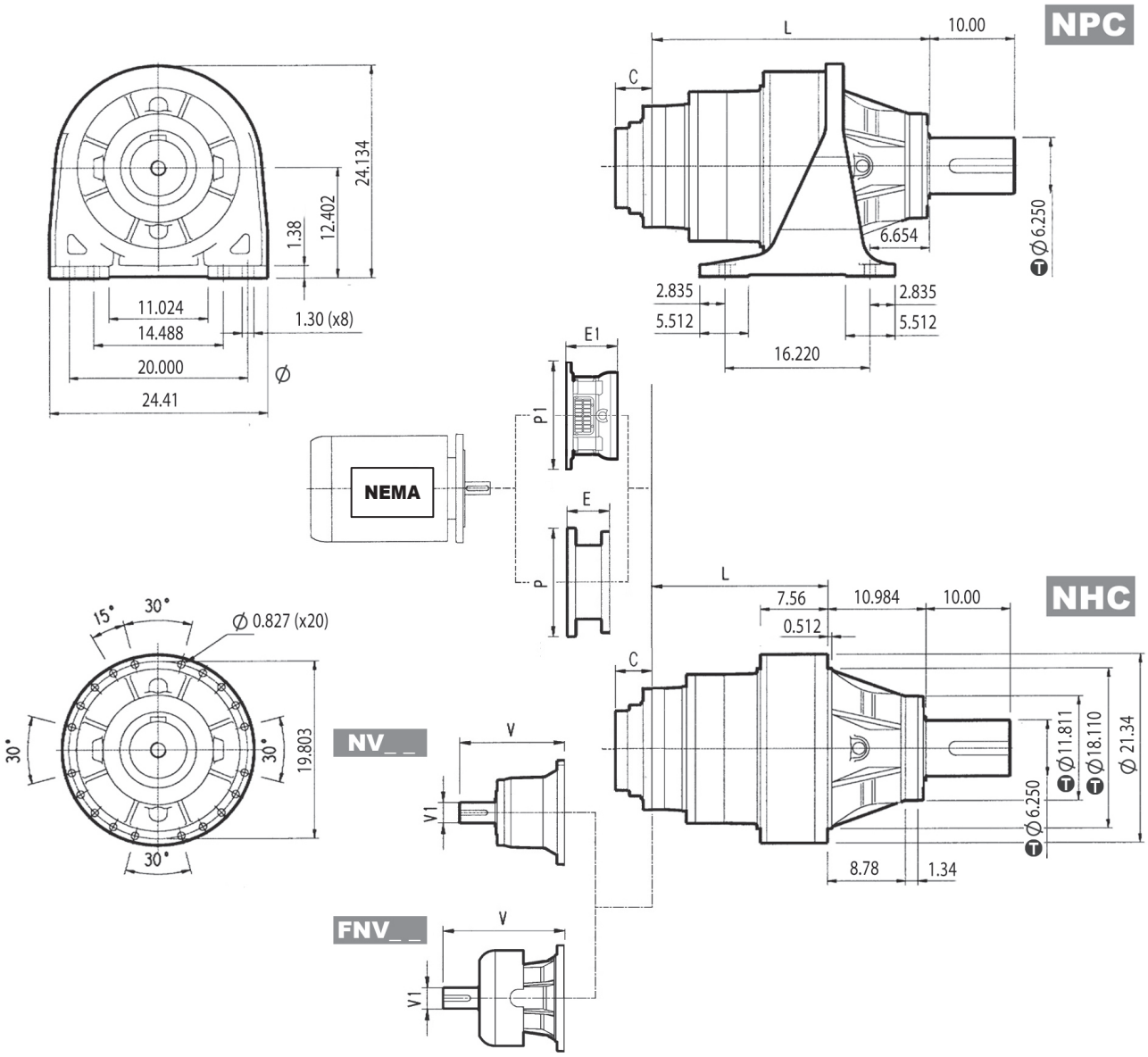

inch	T
18.110	-0.00268 -0.00516
11.811	-0.00220 -0.00425
6.250	+0.00157 +0.00059

	PF N250TC		PF N280TC		PF N320TC		PF N360TC	
	E1	P1	E1	P1	E1	P1	E1	P1
315M L2	—	—	—	—	—	—	12.402	22.835
315M L3	—	—	—	—	9.921	20.866	11.496	20.866
315M L4	8.661	15.748	8.661	15.748	9.843	15.748	10.236	17.717

NOTE: for R design contact Bonfiglioli Technical Service
for PF N400TC contact Bonfiglioli Technical Service

Dimensions are in Inch except when shown in *italic [mm]*

	L		lbs	
	NPC	NHC	NPC	NHC
315M L1	—	—	—	—
315M L2	26.181	15.197	1290	1003
315M L3	31.417	20.433	1389	1103
315M L4	34.921	23.937	1416	1129

	V	V1	lbs	V	V1	lbs	V	V1	lbs	V	V1	lbs	C	Input
315M L1	—	—	—	—	—	—	—	—	—	—	—	—	4.567	E
315M L2	13.563	3.000	121.3	—	—	—	17.835	3.000	140.0	—	—	—	3.189	D
315M L3	13.130	2.375	29.8	12.283	3.000	77.2	15.104	2.375	38.0	14.646	3.000	90.0	2.008	B
315M L4	9.681	1.875	33.1	—	—	—	11.138	1.875	38.0	—	—	—	1.457	A

	N250TC		N280TC		N320TC		N360TC	
	E	P	E	P	E	P	E	P
315M L3	—	—	—	—	8.445	15.748	8.445	15.748
315M L4	5.216	11.811	6.221	13.780	—	—	—	—

315M R

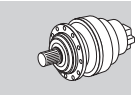

Imperial

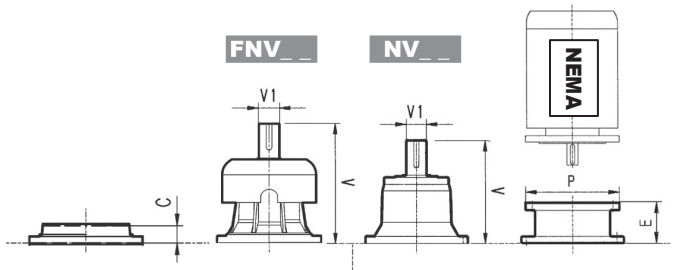

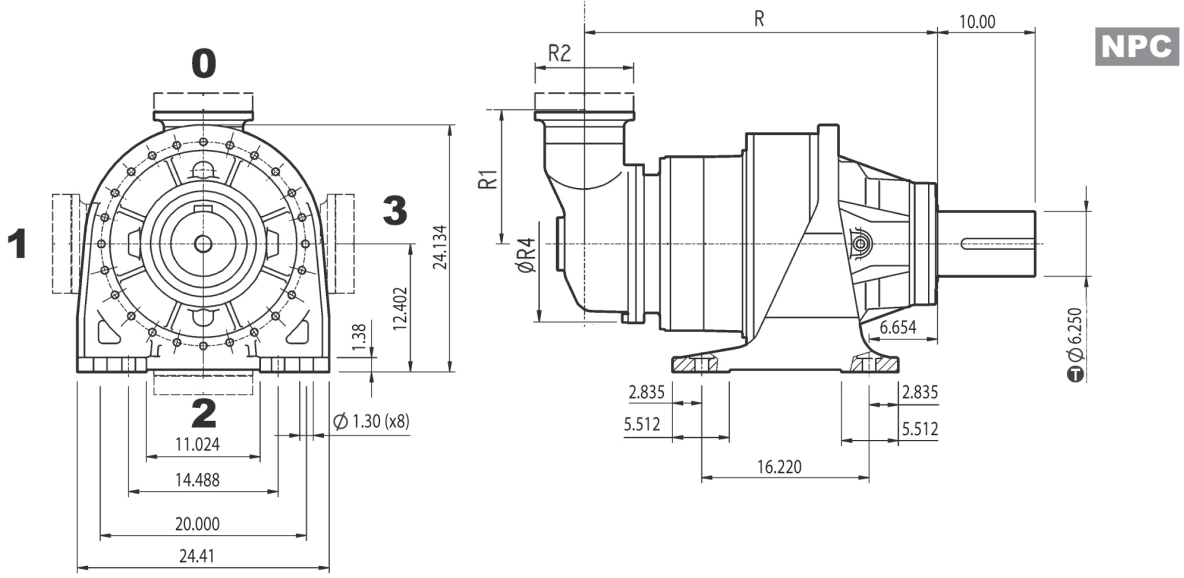

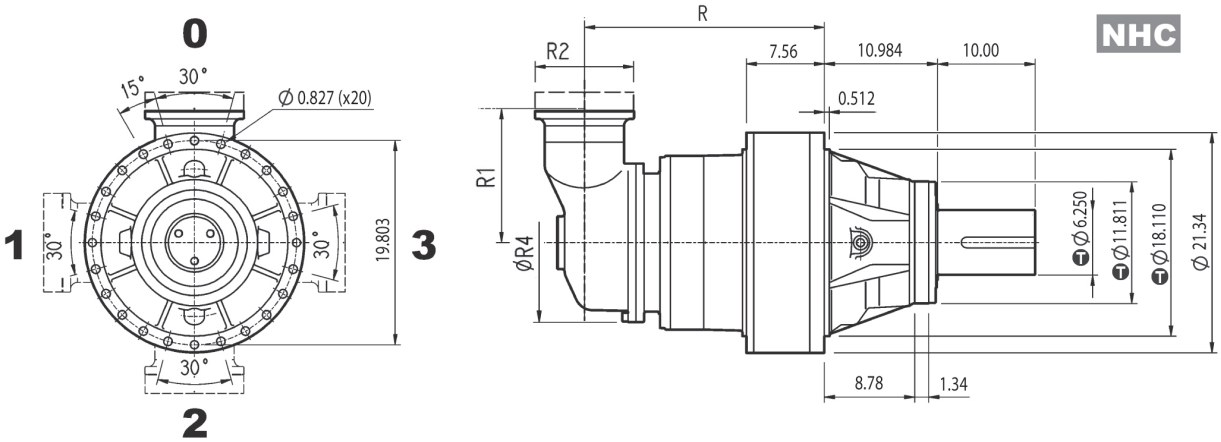

inch	T
18.110	-0.00268 -0.00516
11.811	-0.00220 -0.00425
6.250	+0.00157 +0.00059

Dimensions are in Inch except when shown in *italic [mm]*

	R		R1	R2	R4	lbs	
	NPC	NHC				NPC	NHC
315M R3 (B)	35.039	24.055	13.583	11.496	15.748	1588	1301
315M R3 (C)	35.039	24.055	15.354	11.496	18.898	1610	1323
315M R4	36.102	25.118	8.858	9.646	13.583	1499	1213

	V	V1	lbs	V	V1	lbs	C	Input
315M R3 (B)	12.703	2.375	50.7	14.652	2.375	58.0	1.772	B
315M R3 (C)	12.703	2.375	50.7	14.652	2.375	58.0	1.772	B
315M R4	9.681	1.875	33.1	11.138	1.875	38.0	1.457	A

	N250TC		N280TC		N320TC		N360TC	
	E	P	E	P	E	P	E	P
315M R3 (B)	—	—	—	—	7.776	13.780	7.776	13.780
315M R3 (C)	—	—	—	—	7.776	13.780	7.776	13.780
315M R4	5.216	11.811	6.221	13.780	—	—	—	—

3/V 15M L3

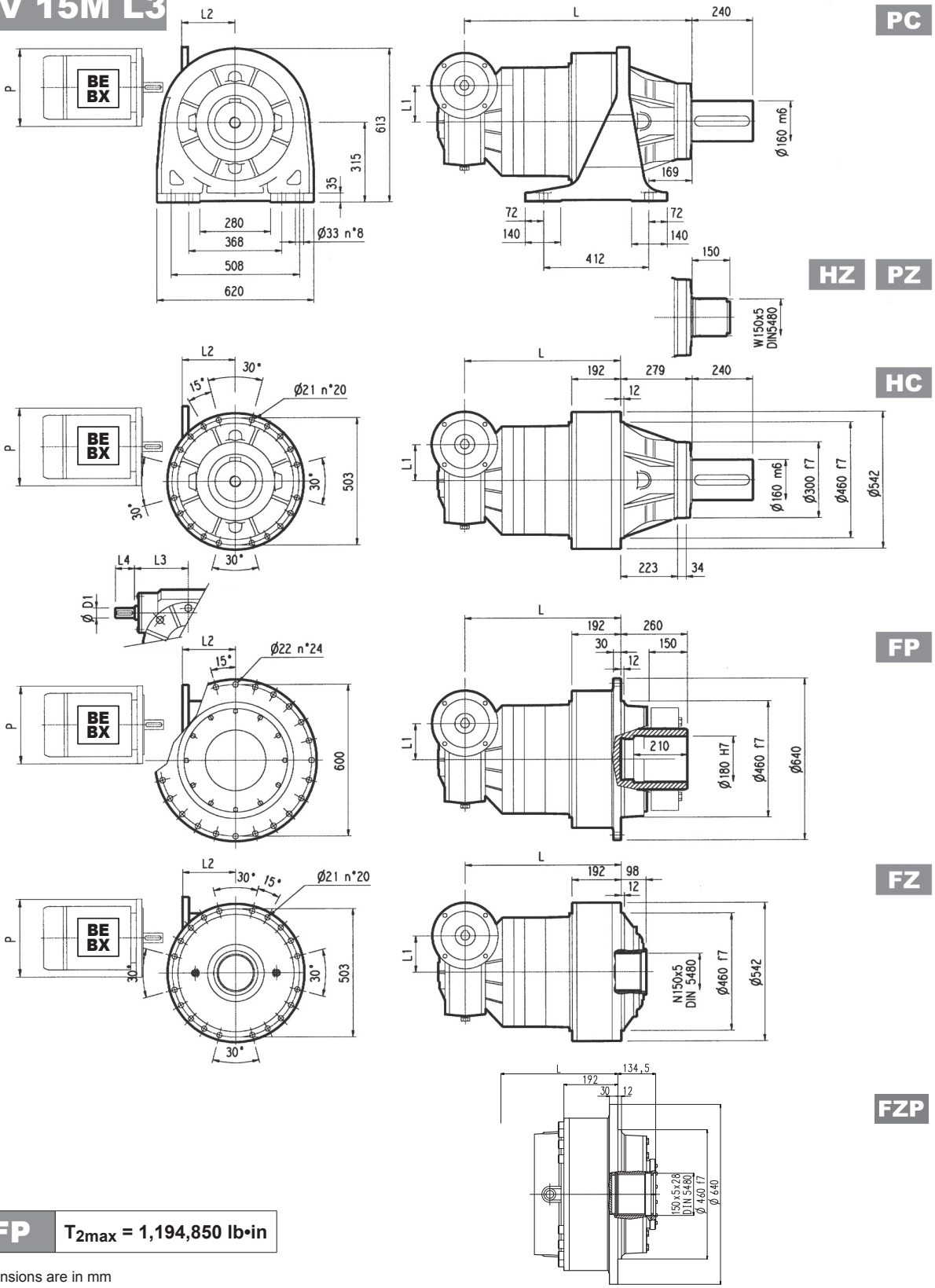

FP T_{2max} = 1,194,850 lb•in

Dimensions are in mm

	L				L1	L2	D1	L3	L4	Kg			
	PC - PZ	HC - HZ	FZ - FZP	FP						PC - PZ	HC - HZ	FZ - FZP	FP
3/V 15M L3	885	606	606	606	210	—	48	230	110	800	670	575	625

	P100	P112	P132		P160		P180		P200		P225	
	P	P	L2	P	L2	P	L2	P	L2	P	L2	P
3/V 15M L3	—	—	485	300	460	350	460	350	485	400	490	450

3/V 15M L4

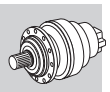

Metric

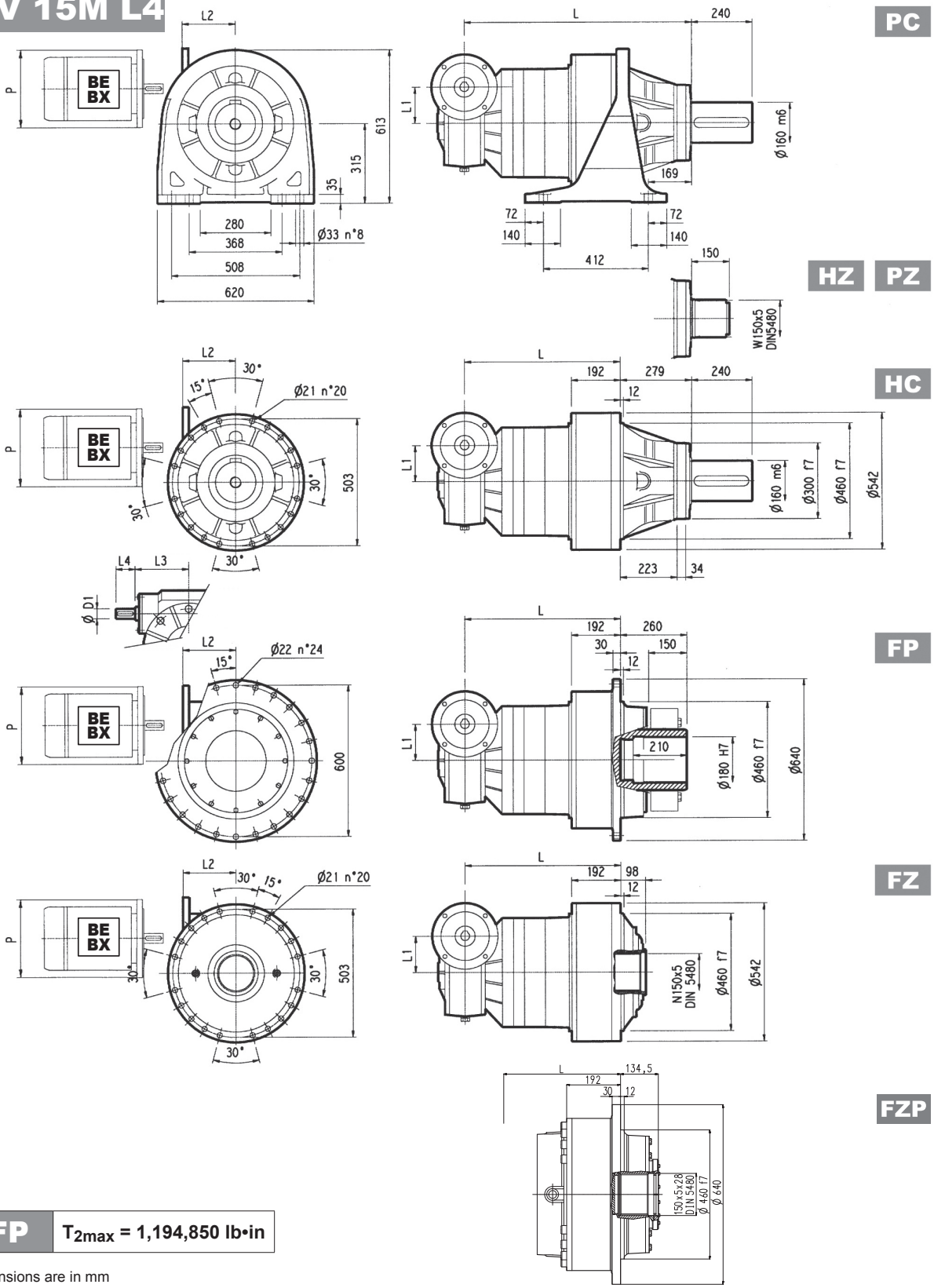

FP T_{2max} = 1,194,850 lb•in

Dimensions are in mm

	L				L1	L2	D1	L3	L4	Kg			
	PC - PZ	HC - HZ	FZ - FZP	FP						PC - PZ	HC - HZ	FZ - FZP	FP
3/V 15M L4	989	710	710	710	150	190	35	185	65	690	560	470	520

	P100	P112	P132		P160		P180		P200		P225	
	P	P	L2	P	L2	P	L2	P	L2	P	L2	P
3/V 15M L4	250	250	—	300	—	350	—	—	—	—	—	—

Bonfiglioli Riduttori

315M L | 315M R | 3/V 15M L

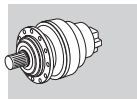

Metric

Imperial

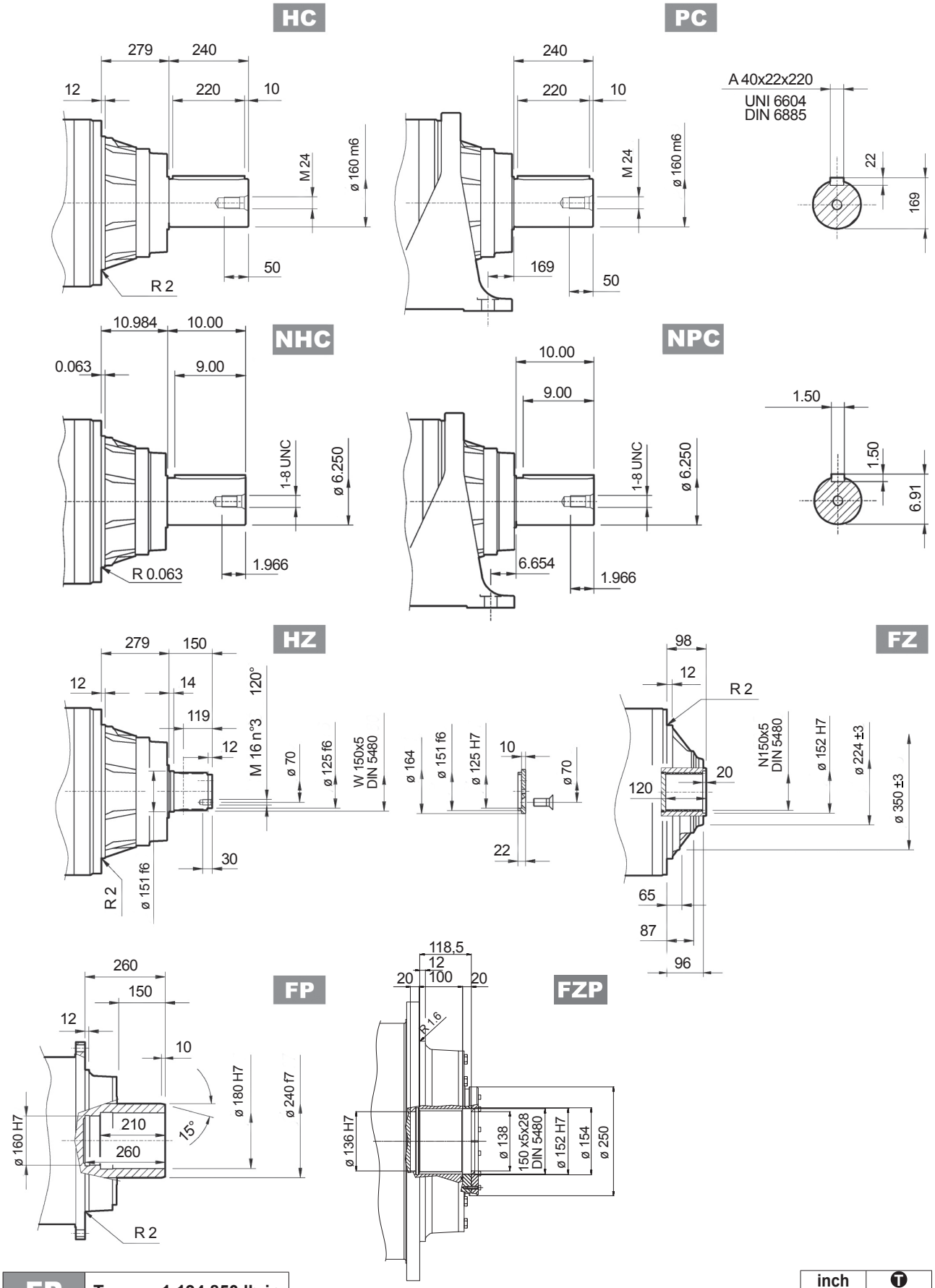

FP	T_{2max} = 1,194,850 lb•in

Dimensions are in mm when shown in italic, otherwise dimensions are in inches

inch	T
6.250	+0.00157 +0.00059

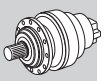

Flange

W0A

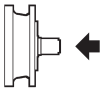

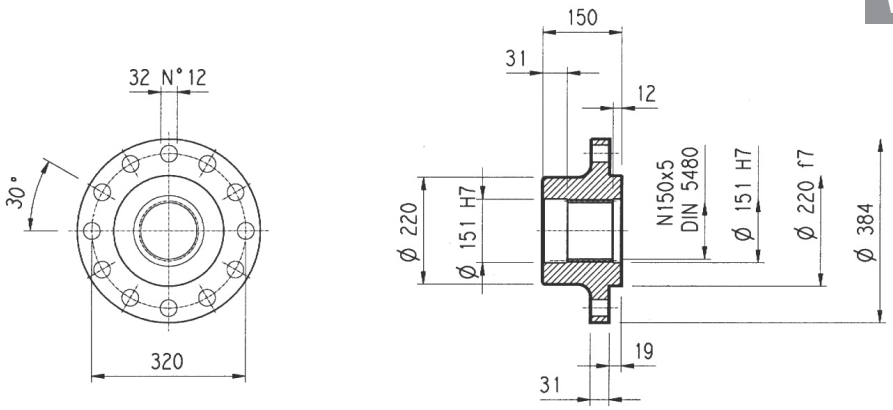

Material: Steel C40

Dimensions are in mm

Pinions

P...

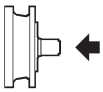

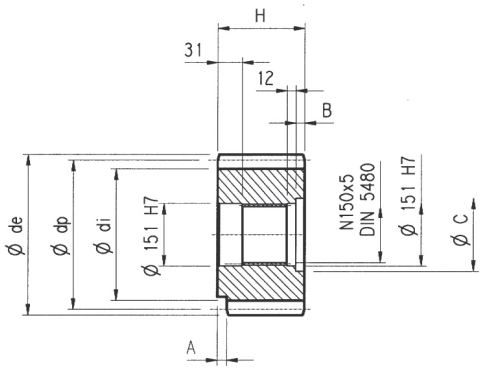

α = 20°

Dimensions are in mm

	m	z	x	dp	di	de	H	A	B	C	Material
PRG1	18	16	0.500	288	261	342	160	—	10	166	Steel 18NiCrMo5 case hardened
PRG2	18	16	0.617	288	271	339	150	30	—	—	Steel 39NiCrMo3 hardened and tempered

Sleeve coupling

M0A

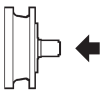

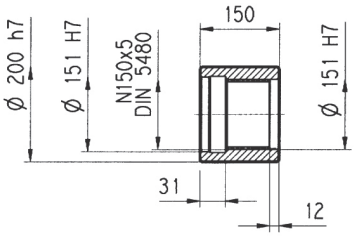

Material: Steel 16CrNi4

Dimensions are in mm

Splined bars

B0A

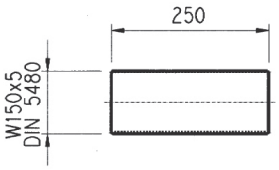

Material: Case hardening steel 18NiCrMo5 UNI 5331
must be case hardened 50-55 HRC

Shrink disc

G0A

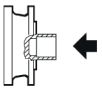

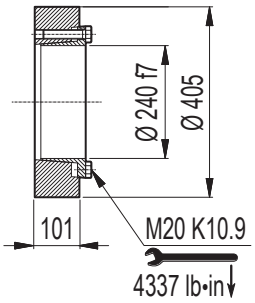

Dimensions are in mm

315M L 315M R

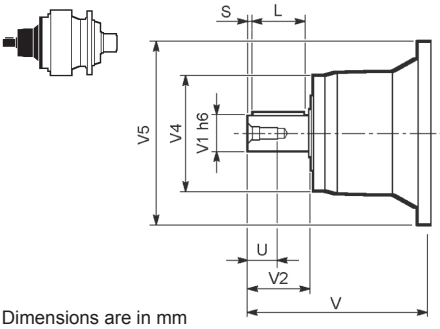

V_ _

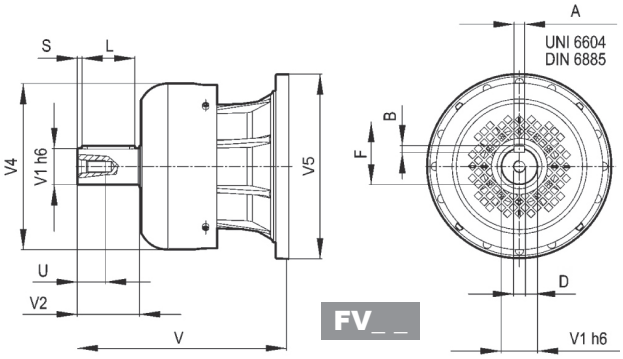

FV_ _

Metric

Dimensions are in mm

		V	V1	V2	V4	V5	A	B	F	L	S	D	U
315M L1	**V15B**	556	120	210	230	542	32	18	127	180	15	M24	50
315M L2	**V11B**	348	80	130	200	428	22	14	85	110	10	M16	36
	FV11B	456	80	130	347.5	428	22	14	85	110	10	M16	36
315M L3	**V07B**	315	80	130	200	345	22	14	85	110	10	M16	36
	FV07B	375	80	130	347.5	348	22	14	85	110	10	M16	36
	V07A	313	60	105	155	345	18	11	64	90	7.5	M16	36
	FV07A	363	60	105	309	348	18	11	64	90	7.5	M16	36
315M L4	**V05B**	239	48	82	155	245	14	9	51.5	70	6	M16	36
	FV05B	276	48	82	219.5	244	14	9	51.5	70	6	M16	36
315M R3 (B) (C)	**V06B**	307	60	105	155	292	18	11	64	90	7.5	M16	36
	FV06B	357	60	105	309	292	18	11	64	90	7.5	M16	36
315M R4	**V05B**	239	48	82	155	245	14	9	51.5	70	6	M16	36
	FV05B	276	48	82	219.5	244	14	9	51.5	70	6	M16	36

315M L 315M R

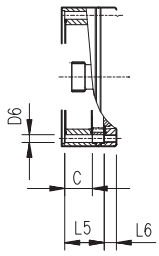

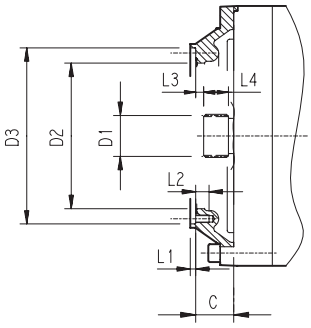

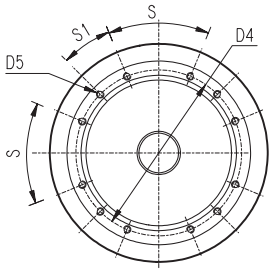

Dimensions are in mm

		C	D1	D2	D3	D4	D5	D6	L1	L2	L3	L4	L5	L6	S	S1	Input
315M L1	**V9AE**	116	100x94 DIN 5482	340	412 H7	390	M16 n°18	—	7	30	8	55	—	—	20°	20°	E
315M L2	**V9AD**	81	80x74 DIN 5482	270	335 H7	314	M16 n°8	—	5	30	8.5	40	—	—	60°	30°	D
315M L3	**V9AB**	51	58x53 DIN 5482	195	236 H7	222	M10 n°12	—	4	18	11	22	—	—	45°	22.5°	B
315M L4	**V9AA**	37	40x36 DIN 5482	140	178 H7	165	M10 n°8	—	4	18	9	18	—	—	45°	45°	A
315M R4	**V9AA**	37	40x36 DIN 5482	140	178 H7	165	M10 n°8	11	4	18	9	18	—	—	45°	45°	A
315M R3 (B) (C)	**V9AB**	45	58x53 DIN 5482	195	236 H7	222	M10 n°12	—	4	18	11	22	—	—	45°	22.5°	B

3/V 15M L

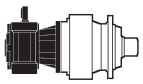

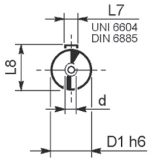

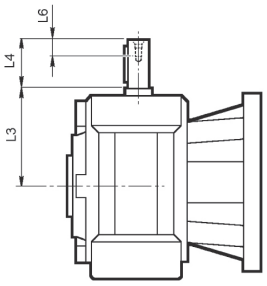

Dimensions are in mm

	D1 h6	L3	L4	L6	L7	L8	d
3/V 15M L3_HS	48	230	110	40	14	51.5	M16
3/V 15M L4_HS	35	185	65	20	10	38	M8

315M L 315M R

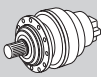

inch	Ⓣ
3.000	0 -0.00075
2.375	0 -0.00053
1.875	0 -0.00053

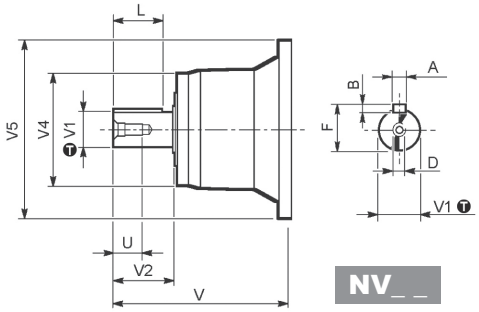

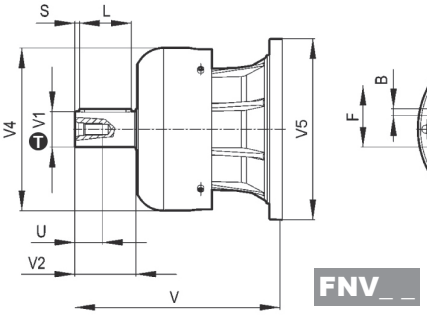

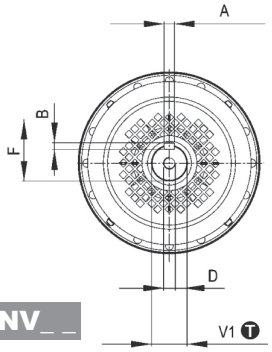

Dimensions are in Inch except when shown in *italic [mm]*

		V	V1	V2	V4	V5	A	B	F	L	D	U
315M L2	**NV11B**	13.563	3.000	5.000	8.160	16.850	0.750	0.750	3.328	4.374	3/4-10 UNC	1.654
	FNV11B	17.835	3.000	5.000	13.678	16.850	0.750	0.750	3.328	4.374	3/4-10 UNC	1.654
315M L3	**NV07B**	12.283	3.000	5.000	7.165	13.699	0.750	0.750	3.328	4.374	3/4-10 UNC	1.654
	FNV07B	14.646	3.000	5.000	13.677	13.699	0.750	0.750	3.328	4.374	3/4-10 UNC	1.654
	NV07A	13.130	2.375	4.750	6.024	13.700	0.625	0.625	2.645	4.250	3/4-10 UNC	1.654
	FNV07A	15.104	2.375	4.750	6.811	13.700	0.625	0.625	2.645	4.250	3/4-10 UNC	1.654
315M L4	**NV05B**	9.681	1.875	3.500	6.417	9.606	0.500	0.500	2.091	3.000	5/8-11 UNC	1.417
	FNV05B	11.138	1.875	3.500	8.641	9.606	0.500	0.500	2.091	3.000	5/8-11 UNC	1.417
315M R3 (B) (C)	**NV06B**	12.703	2.375	4.750	6.417	11.496	0.625	0.625	2.646	4.252	3/4-10 UNC	1.654
	FNV06B	14.652	2.375	4.750	12.165	11.496	0.625	0.625	2.646	4.252	3/4-10 UNC	1.654
315M R4	**NV05B**	9.681	1.875	3.500	6.417	9.606	0.500	0.500	2.091	3.000	5/8-11 UNC	1.417
	FNV05B	11.138	1.875	3.500	8.641	9.606	0.500	0.500	2.091	3.000	5/8-11 UNC	1.417

315M L 315M R

inch	Ⓣ
16.22	+0.00248 0
13.19	+0.00224 0
9.29	+0.00181 0
7.01	+0.00157 0

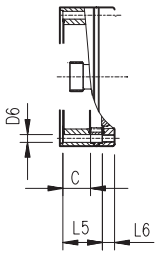

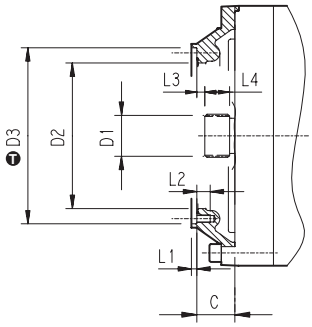

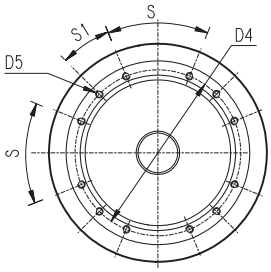

Dimensions are in Inch except when shown in *italic [mm]*

		C	D1	D2	D3	D4	D5	D6	L1	L2	L3	L4	L5	L6	S	S1	Input
315M L1	**V9AE**	4.57	*100x94 DIN 5482*	13.39	16.22	15.35	*M16 n°18*	—	0.28	1.18	0.31	2.17	—	—	20°	20°	E
315M L2	**V9AD**	3.19	*80x74 DIN 5482*	10.63	13.19	12.36	*M16 n°8*	—	0.20	1.18	0.33	1.57	—	—	60°	30°	D
315M L3	**V9AB**	2.01	*58x53 DIN 5482*	7.68	9.29	8.74	*M10 n°12*	—	0.16	0.71	0.43	0.87	—	—	45°	22.5°	B
315M L4	**V9AA**	1.46	*40x36 DIN 5482*	5.51	7.01	6.50	*M10 n°8*	—	0.16	0.71	0.35	0.71	—	—	45°	45°	A
315M R4	**V9AA**	1.46	*40x36 DIN 5482*	5.51	7.01	6.50	*M10 n°8*	0.43	0.16	0.71	0.35	0.71	—	—	45°	45°	A
315M R3 (B) (C)	**V9AB**	1.77	*58x53 DIN 5482*	7.68	9.29	8.74	*M10 n°12*	—	0.16	0.71	0.43	0.87	—	—	45°	22.5°	B

315M L 315M R 3/V 15M L

Permissible radial and axial loads on output shaft with $Fh_2 : n_2 \cdot h = 100000$

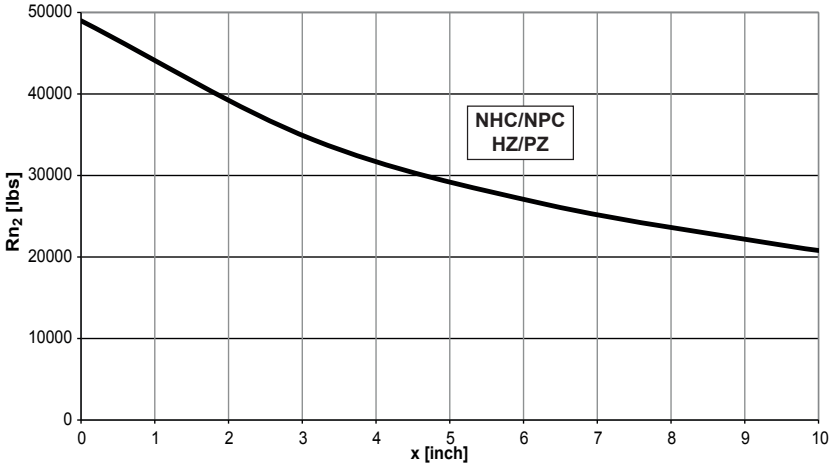

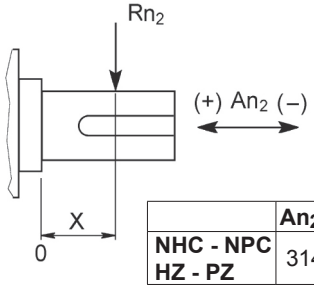

	An_2 (+)	An_2 (-)
NHC - NPC HZ - PZ	31472	23604

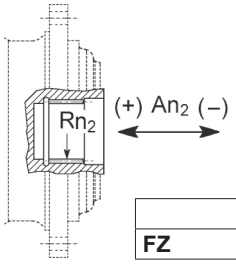

	Rn_2	An_2 (+/-)
FZ	9391	9391

Load corrective factor fh_2 on shafts	$Fh_2 = n_2 \cdot h$		10000	25000	50000	100000	500000	1000000
	fh_2	FZ	**2.15**	**1.59**	**1.26**	**1.00**	**0.58**	**0.46**
		NHC - NPC - HZ -PZ	**2.00**	**1.52**	**1.23**	**1.00**	**0.62**	**0.50**

Permissible radial loads on input shaft with $Fh_1 : n_1 \cdot h = 250000$

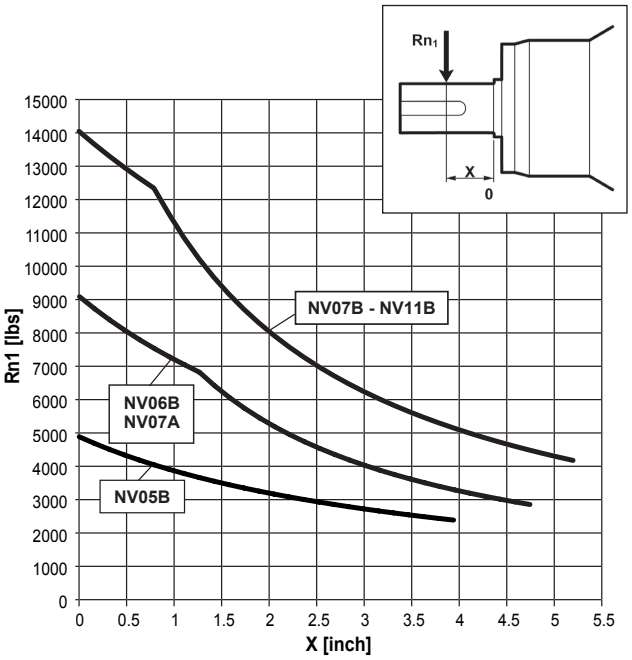

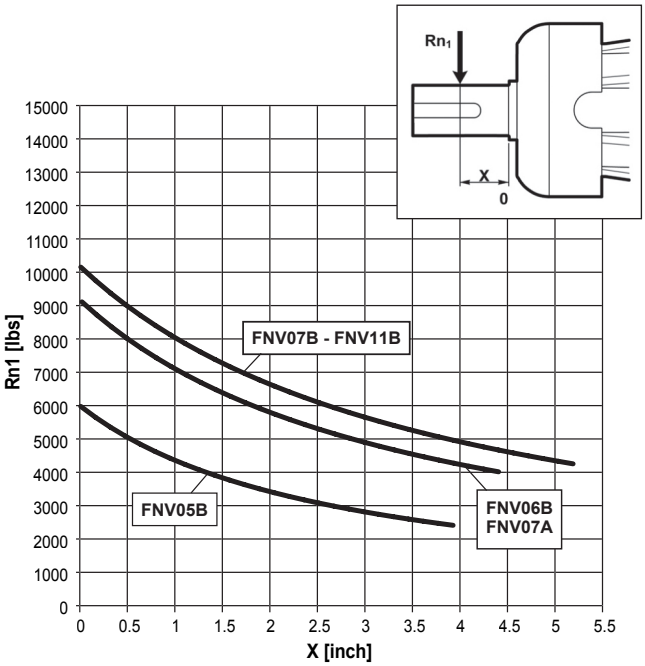

Load corrective factor fh_1 on shafts	$Fh_1 = n_1 \cdot h$	250000	500000	1000000	2000000	5000000	10000000
	fh_1	**1**	**0.79**	**0.63**	**0.50**	**0.37**	**0.29**

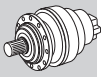

315M VK

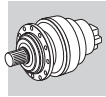

Metric

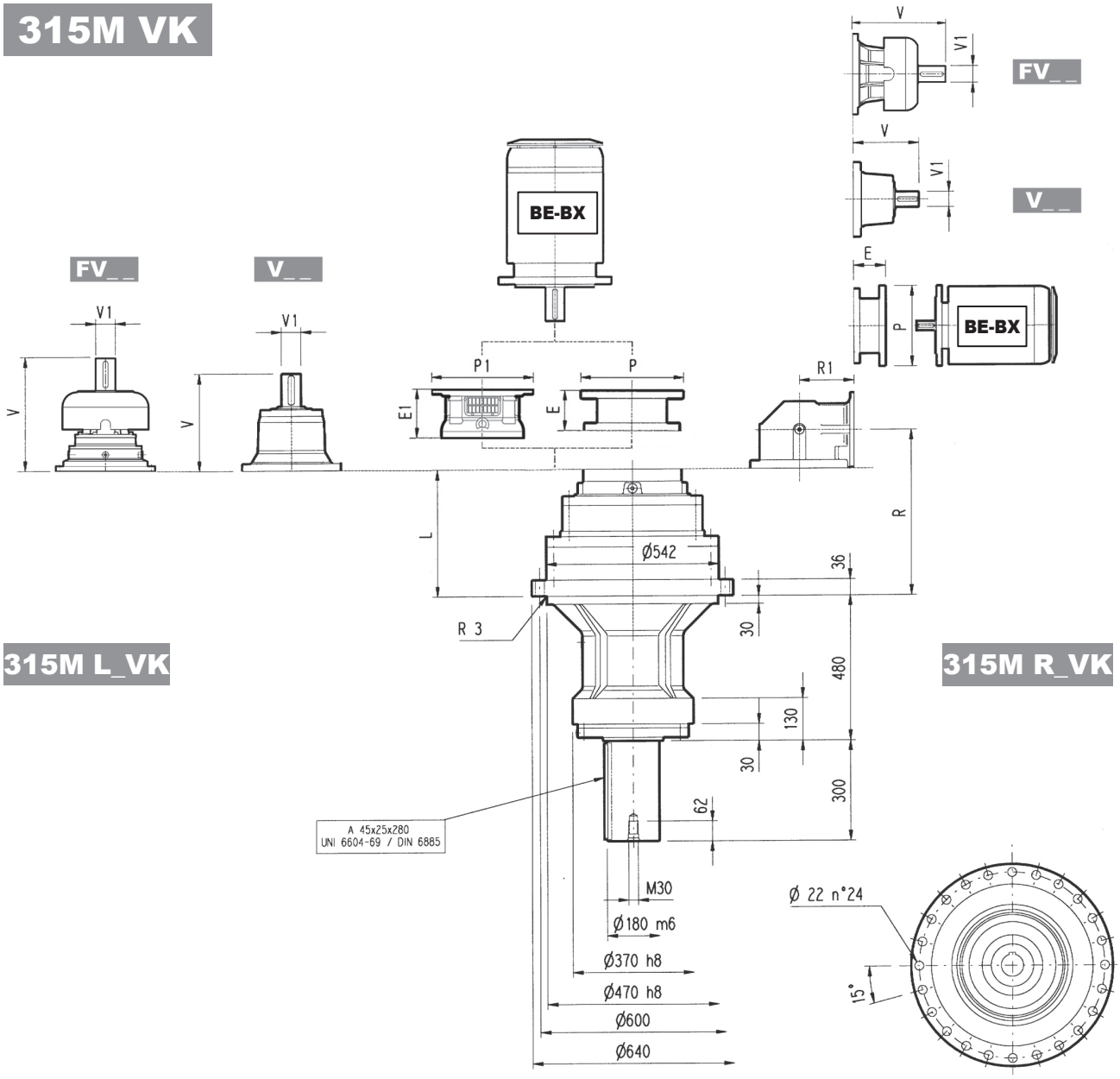

315M L_VK

315M R_VK

	PF 160		PF 180		PF 200		PF225		PF 250	
	E1	P1	E1	P1	E1	P1	E1	P1	E1	P1
315M L2	—	—	—	—	—	—	250	580	250	580
315M L3	—	—	—	—	197	530	227	530	227	550
315M L4	165	400	165	400	195	400	195	450	—	—

NOTE: for R design contact Bonfiglioli Technical Service

Dimensions are in mm

	L	Kg	V	V1	Kg	V	V1	Kg	V	V1	Kg	V	V1	Kg	P132		P160		P180		P200		P225		P250	
															E	P	E	P	E	P	E	P	E	P	E	P
315M L2	386	650	348	80	55	—	—	—	456	80	85	—	—	—	—	—	—	—	—	—	—	—	—	—	—	—
315M L3	519	700	315	80	35	313	60	28	375	80	48	363	60	34	—	—	—	—	195	350	186	400	216	450	215	550
315M L4	608	710	239	48	15	—	—	—	276	48	17	—	—	—	114	300	144	350	144	350	174	400	—	—	—	—

	R	R1	Kg	V	V1	Kg	V	V1	Kg	V	V1	Kg	V	V1	Kg	P132		P160		P180		P200		P225		P250	
																E	P	E	P	E	P	E	P	E	P	E	P
315M R3 (B)	611	345	720	307	60	23	—	—	—	357	60	28	—	—	—	—	—	—	—	152	350	182	400	212	450	193	550
315M R3 (C)	611	390	730	307	60	23	—	—	—	357	60	28	—	—	—		—	—	—	152	350	182	400	212	450	193	550
315M R4	638	225	690	239	48	15	—	—	—	276	48	17	—	—	—	114	300	144	350	144	350	174	400	—	—	—	—

315M VK

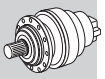

Metric

The diagram below allows the calculation of permitted overhung load R_{x2} on the output shaft of gearbox, with radial force applying at a distance x from shaft shoulder.
The curves are relevant to value resulting from the relationship of trust load A_{n2} to radial load R_{n2}, based on n_2 = 10 rpm and 10000 hrs theoretical lifetime.

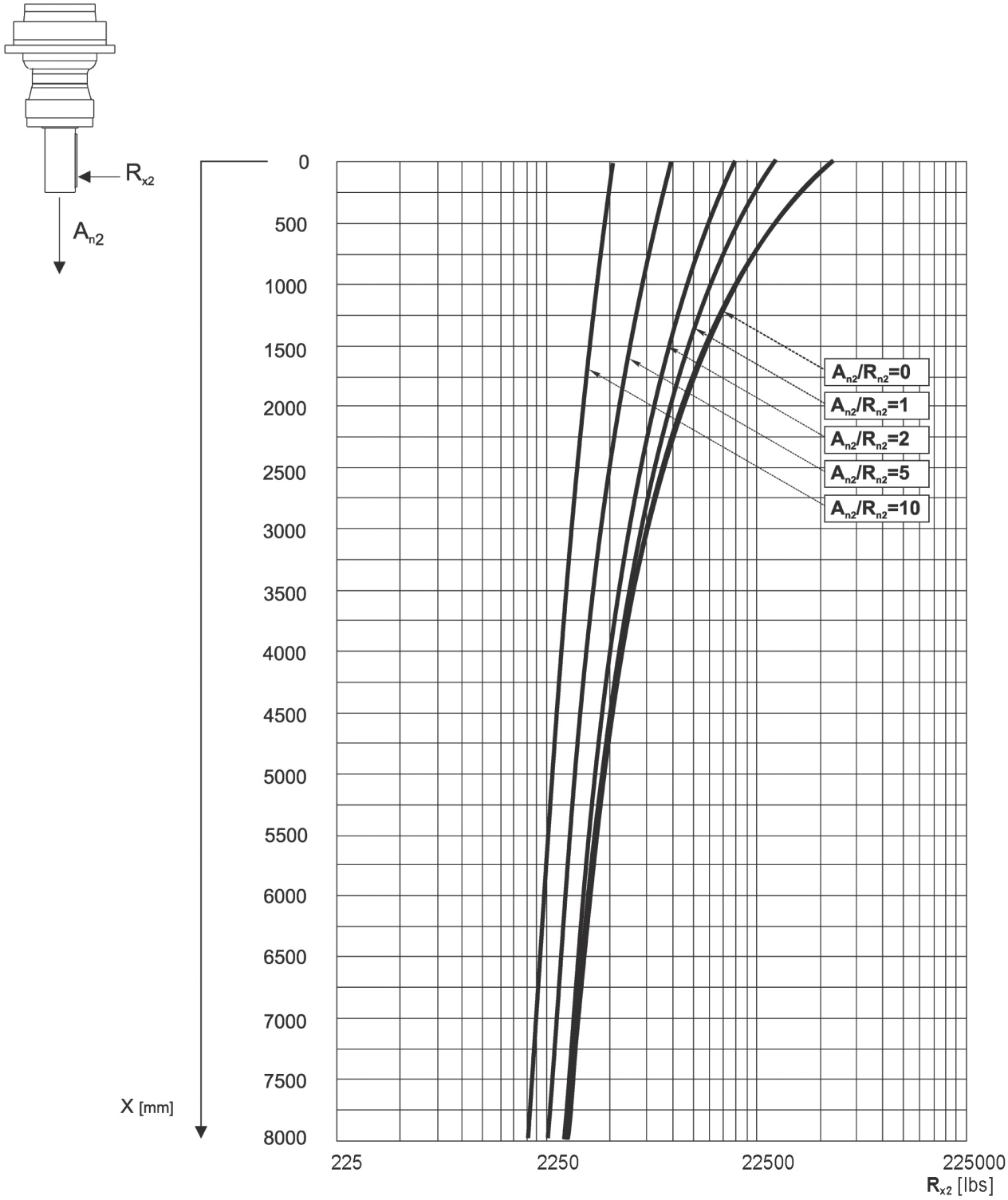

316M L

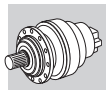

Metric

Imperial

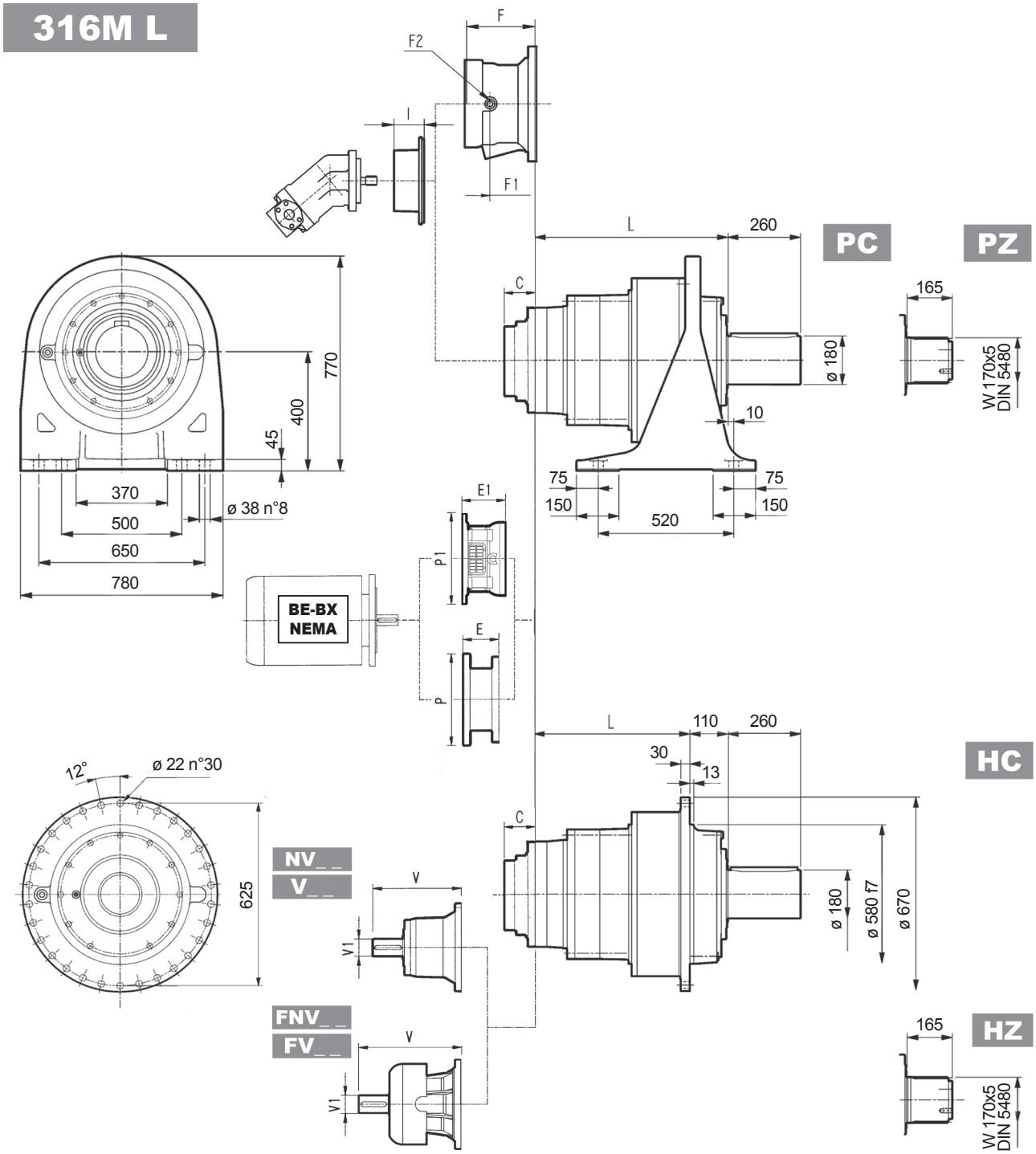

Dimensions are in mm when shown in italic, otherwise dimensions are in inches

	L				Kg							I						Kg
	PC - PZ	HC - HZ	FZ - FZP	FP	PC - PZ	HC - HZ	FZ - FZP	FP	C	C	Input		F	F1	F2	Type	Input	
316M L1	*289*	*179*	*179*	*179*	*700*	*500*	*430*	*450*	*156*	6.142	E	532	—	—	—	—	—	—
316M L2	*541*	*431*	*431*	*431*	*790*	*590*	*520*	*540*	*81*	3.189	D		—	—	—	—	—	—
316M L3	*674*	*564*	*564*	*564*	*840*	*640*	*570*	*590*	*51*	2.008	B		*201*	*153*	1/4 G	6	B	*28*
316M L4	*763*	*653*	*653*	*653*	*860*	*660*	*590*	*610*	*37*	1.457	A		*145*	*95*	1/4 G	5	A	*16*

	V_ _						FV_ _						NV_ _						FNV_ _					
	V	V1	Kg	V	V1	Kg	V	V1	Kg	V	V1	Kg	V	V1	lbs	V	V1	lbs	V	V1	lbs	V	V1	lbs
316M L1	—	—	—	—	—	—	—	—	—	—	—	—	—	—	—	—	—	—	—	—	—	—	—	—
316M L2	*348*	*80*	*55*	—	—	—	*456*	*80*	*85*	—	—	—	13.563	3.000	121.3	—	—	—	17.835	3.000	140.0	—	—	—
316M L3	*315*	*80*	*35*	*313*	*60*	*28*	*375*	*80*	*48*	*363*	*60*	*34*	13.130	2.375	29.8	12.283	3.000	77.2	15.104	2.375	38.0	14.646	3.000	90.0
316M L4	*239*	*48*	*15*	—	—	—	*276*	*48*	*17*	—	—	—	9.681	1.875	33.1	—	—	—	11.138	1.875	38.0	—	—	—

316M L

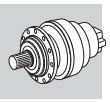

Metric

Imperial

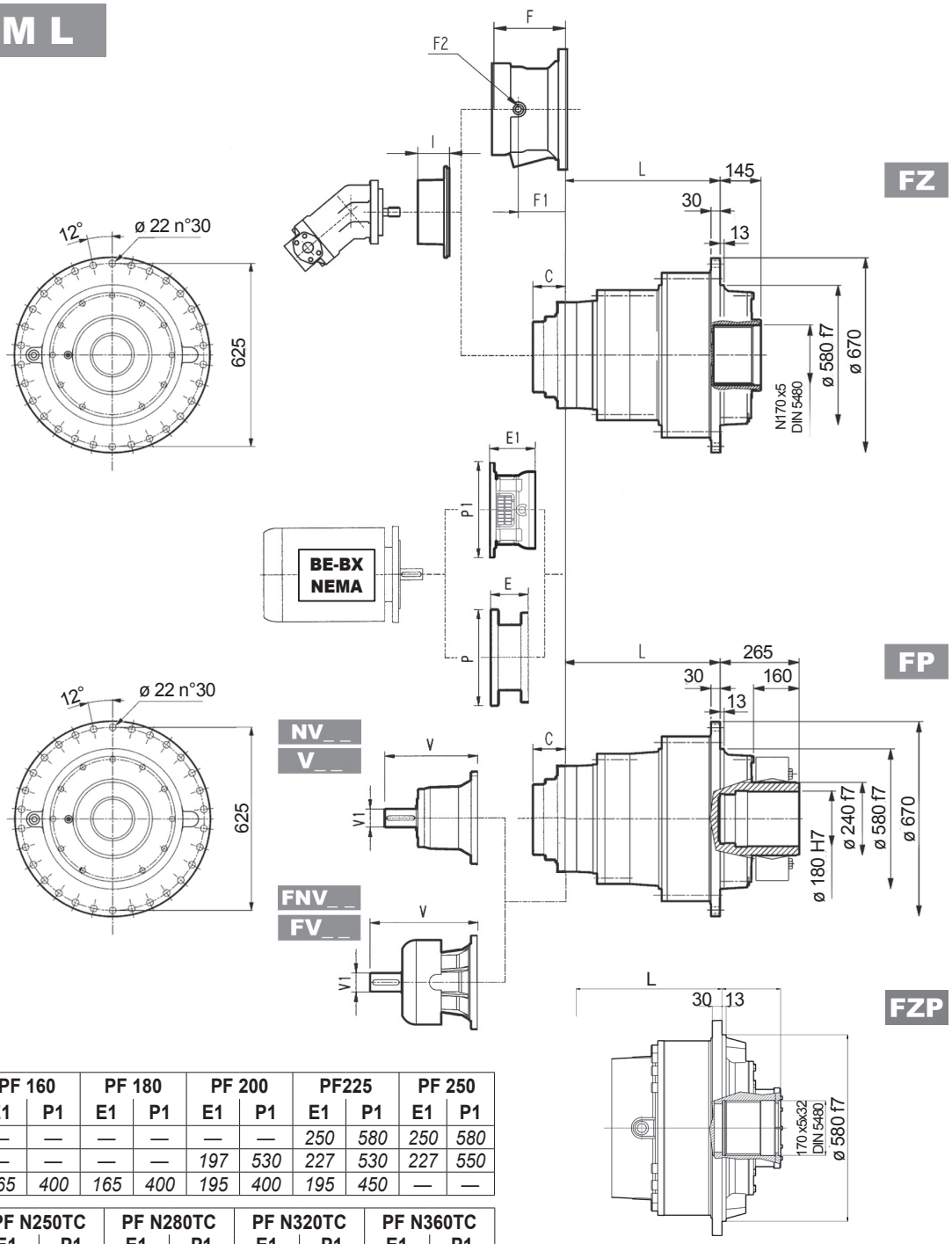

	PF 160		PF 180		PF 200		PF225		PF 250	
	E1	P1	E1	P1	E1	P1	E1	P1	E1	P1
316M L2	—	—	—	—	—	—	*250*	*580*	*250*	*580*
316M L3	—	—	—	—	*197*	*530*	*227*	*530*	*227*	*550*
316M L4	*165*	*400*	*165*	*400*	*195*	*400*	*195*	*450*	—	—

	PF N250TC		PF N280TC		PF N320TC		PF N360TC	
	E1	P1	E1	P1	E1	P1	E1	P1
316M L2	—	—	—	—	—	—	12.402	22.835
316M L3	—	—	—	—	9.921	20.866	11.496	20.866
316M L4	8.661	15.748	8.661	15.748	9.843	15.748	10.236	17.717

NOTE: for R design contact Bonfiglioli Technical Service
for PF N400TC contact Bonfiglioli Technical Service

FP	T_{2max} = 1,575,430 lb•in

Dimensions are in mm when shown in italic, otherwise dimensions are in inches

	P132		P160		P180		P200		P225		P250	
	E	P	E	P	E	P	E	P	E	P	E	P
316M L2	—	—	—	—	—	—	*267*	*400*	*297*	*450*	*297*	*550*
316M L3	—	—	—	—	*195*	*350*	*186*	*400*	*216*	*450*	*215*	*550*
316M L4	*114*	*300*	*144*	*350*	*144*	*350*	*174*	*400*	—	—	—	—

	N250TC		N280TC		N320TC		N360TC	
	E	P	E	P	E	P	E	P
316M L2	—	—	—	—	—	—	—	—
316M L3	—	—	—	—	8.445	15.748	8.445	15.748
316M L4	5.216	11.811	6.221	13.780	—	—	—	—

316M R

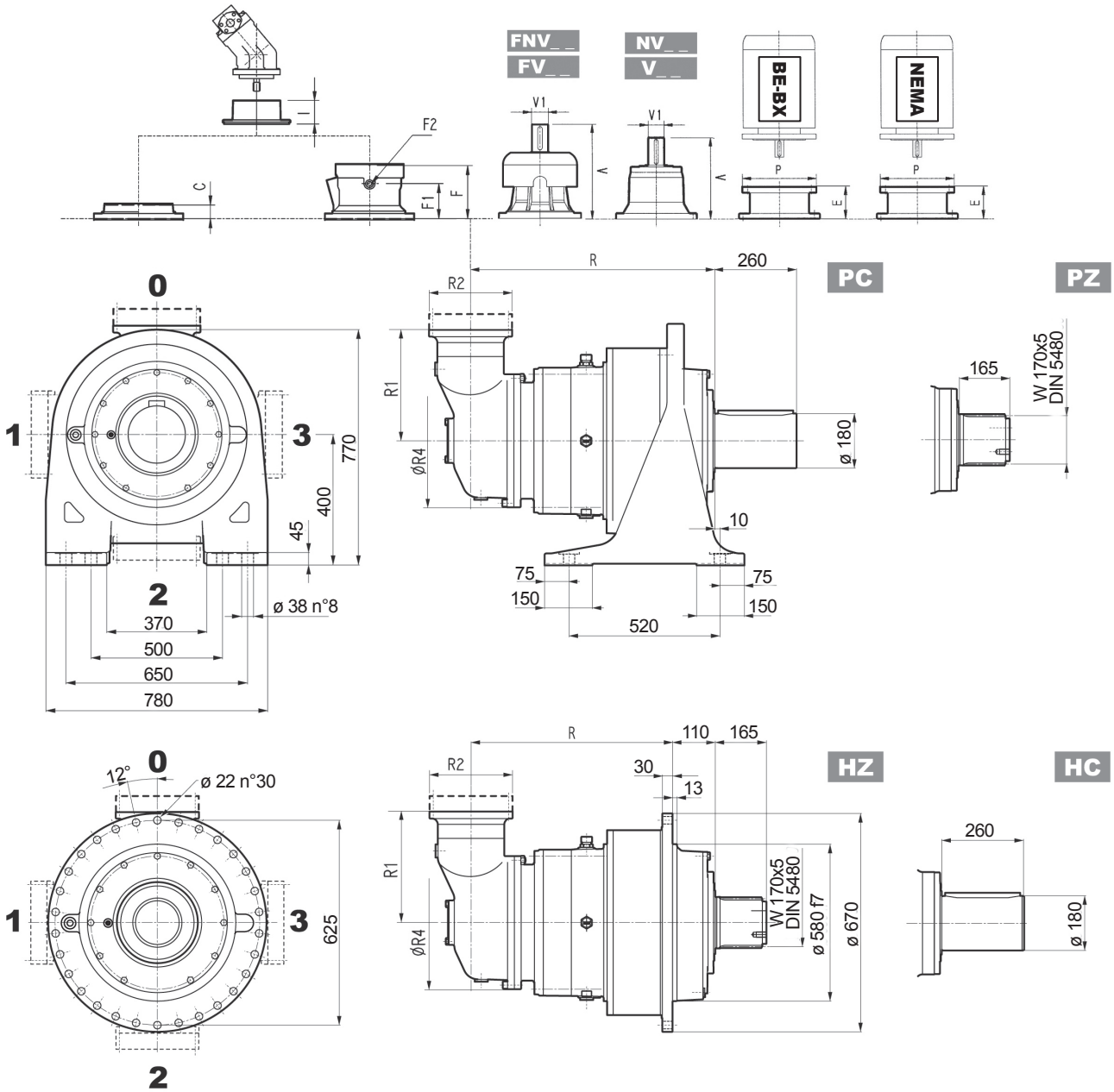

Dimensions are in mm when shown in italic, otherwise dimensions are in inches

	R				R1	R2	R4	Kg													
	PC-PZ	HC-HZ	FZ - FZP	FP				PC-PZ	HC-HZ	FZ - FZP	FP	C	C	Input	I	F	F1	F2	Type	Input	Kg
316M R3 (B)	*766*	*656*	*656*	*656*	*345*	*292*	*400*	*910*	*710*	*640*	*660*	*45*	1.772	B		*195*	*147*	1/4 G	6	B	*28*
316M R3 (C)	*766*	*656*	*656*	*656*	*390*	*292*	*480*	*920*	*720*	*650*	*670*	*45*	1.772	B		*195*	*147*	1/4 G	6	B	*28*
316M R4	*793*	*683*	*683*	*683*	*225*	*245*	*345*	*890*	*690*	*620*	*640*	*37*	1.457	A	532	*145*	*95*	1/4 G	5	A	*16*

	V			FV			NV_ _			FNV_ _		
	V	V1	Kg	V	V1	Kg	V	V1	lbs	V	V1	lbs
316M R3 (B)	*307*	*60*	*23*	*357*	*60*	*28*	12.703	2.375	50.7	14.652	2.375	58.0
316M R3 (C)	*307*	*60*	*23*	*357*	*60*	*28*	12.703	2.375	50.7	14.652	2.375	58.0
316M R4	*239*	*48*	*15*	*276*	*48*	*17*	9.681	1.875	33.1	11.138	1.875	38.0

316M R

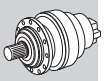

Metric

Imperial

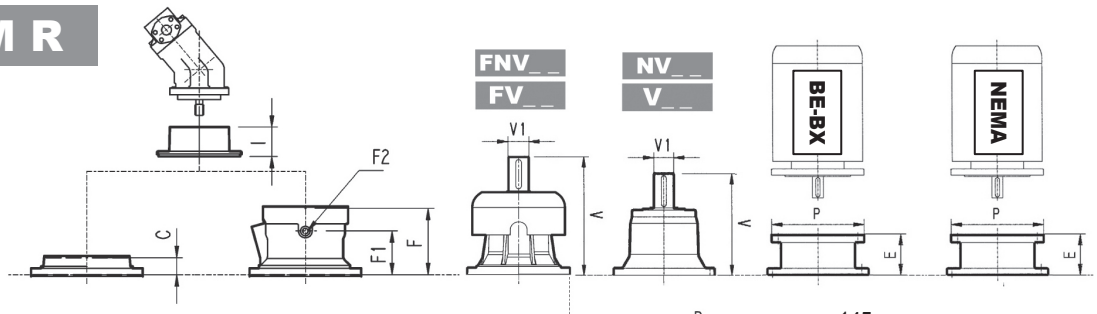

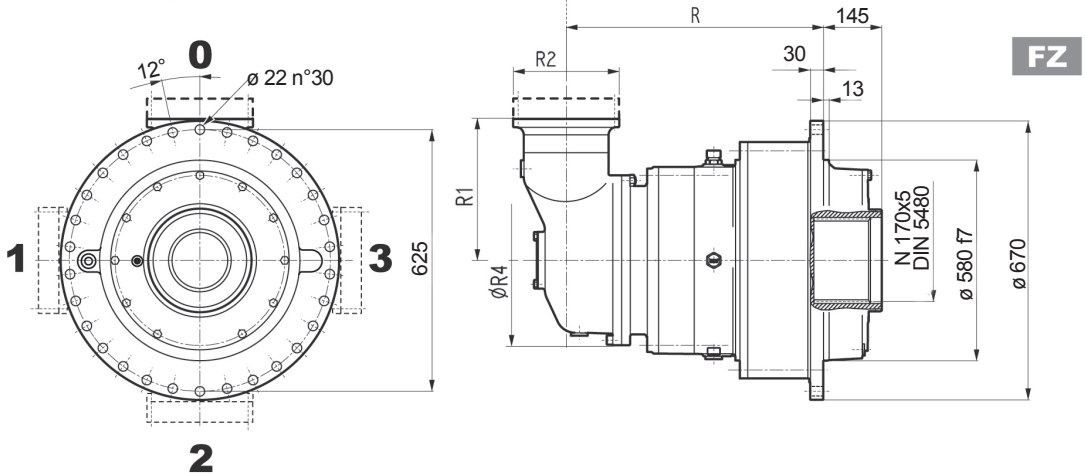

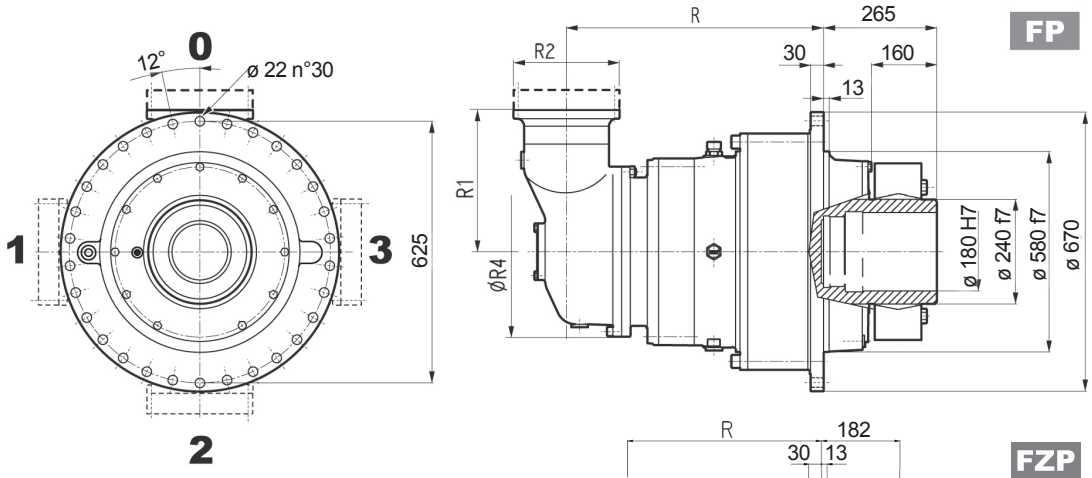

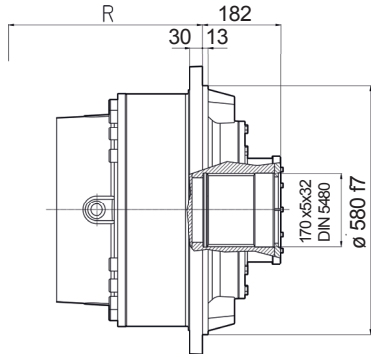

FP	T_{2max} = 1,575,430 lb•in

Dimensions are in mm when shown in italic, otherwise dimensions are in inches

	P132		P160		P180		P200		P225		P250	
	E	P	E	P	E	P	E	P	E	P	E	P
316M R3 (B)	—	—	—	—	*152*	*350*	*182*	*400*	*212*	*450*	*193*	*550*
316M R3 (C)	—	—	—	—	*152*	*350*	*182*	*400*	*212*	*450*	*193*	*550*
316M R4	*114*	*300*	*144*	*350*	*144*	*350*	*174*	*400*	—	—	—	—

	N250TC		N280TC		N320TC		N360TC	
	E	P	E	P	E	P	E	P
316M R3 (B)	—	—	—	—	7.776	13.780	7.776	13.780
316M R3 (C)	—	—	—	—	7.776	13.780	7.776	13.780
316M R4	5.216	11.811	6.221	13.780	—	—	—	—

3/V 16M L3

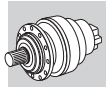

Metric

PC

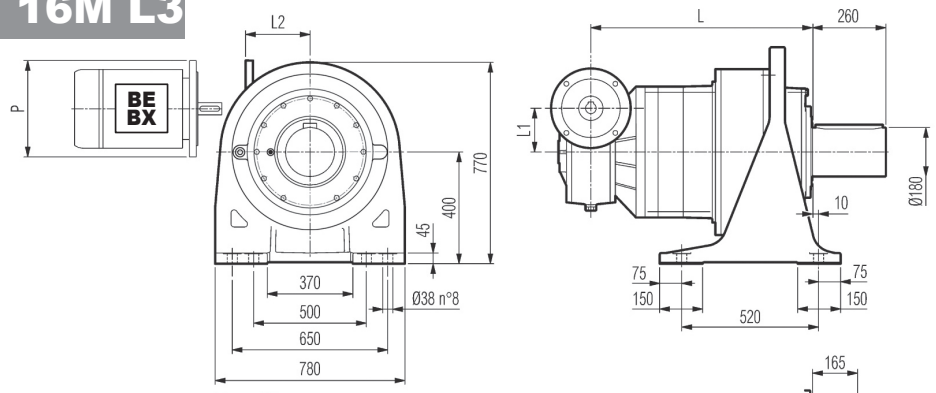

HZ PZ

HC

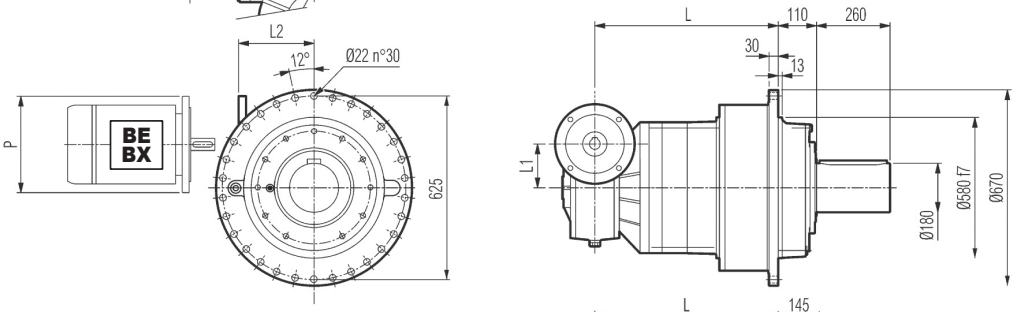

FZ

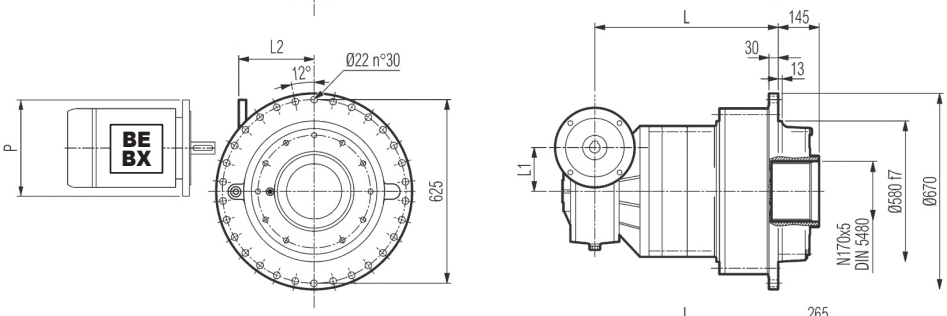

FP

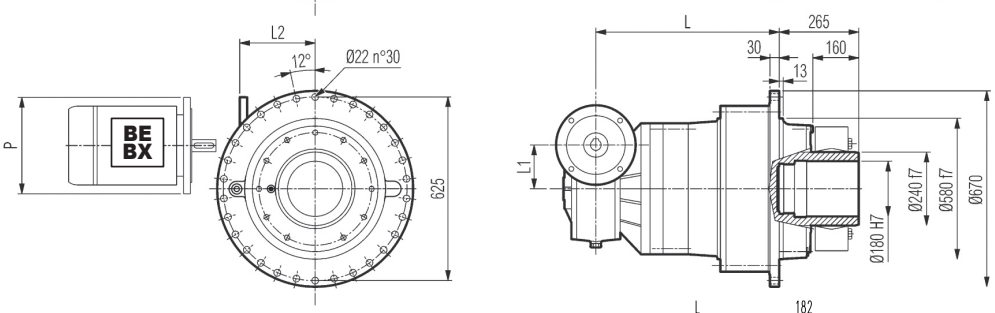

FZP

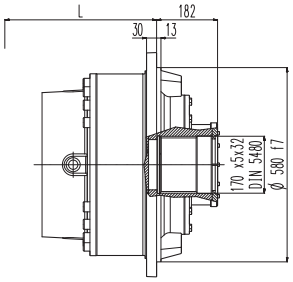

FP	T_{2max} = 1,575,430 lb•in

Dimensions are in mm

	L				L1	D1	L3	L4	Kg			
	PC - PZ	HC - HZ	FZ - FZP	FP					PC - PZ	HC - HZ	FZ - FZP	FP
3/V 16M L3	812	702	702	702	250	55	274	110	1100	900	830	850

	P132		P160		P180		P200		P225	
	L2	P	L2	P	L2	P	L2	P	L2	P
3/V 16M L3	531	300	506	350	506	350	531	400	536	450

3/V 16M L4

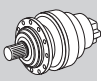

Metric

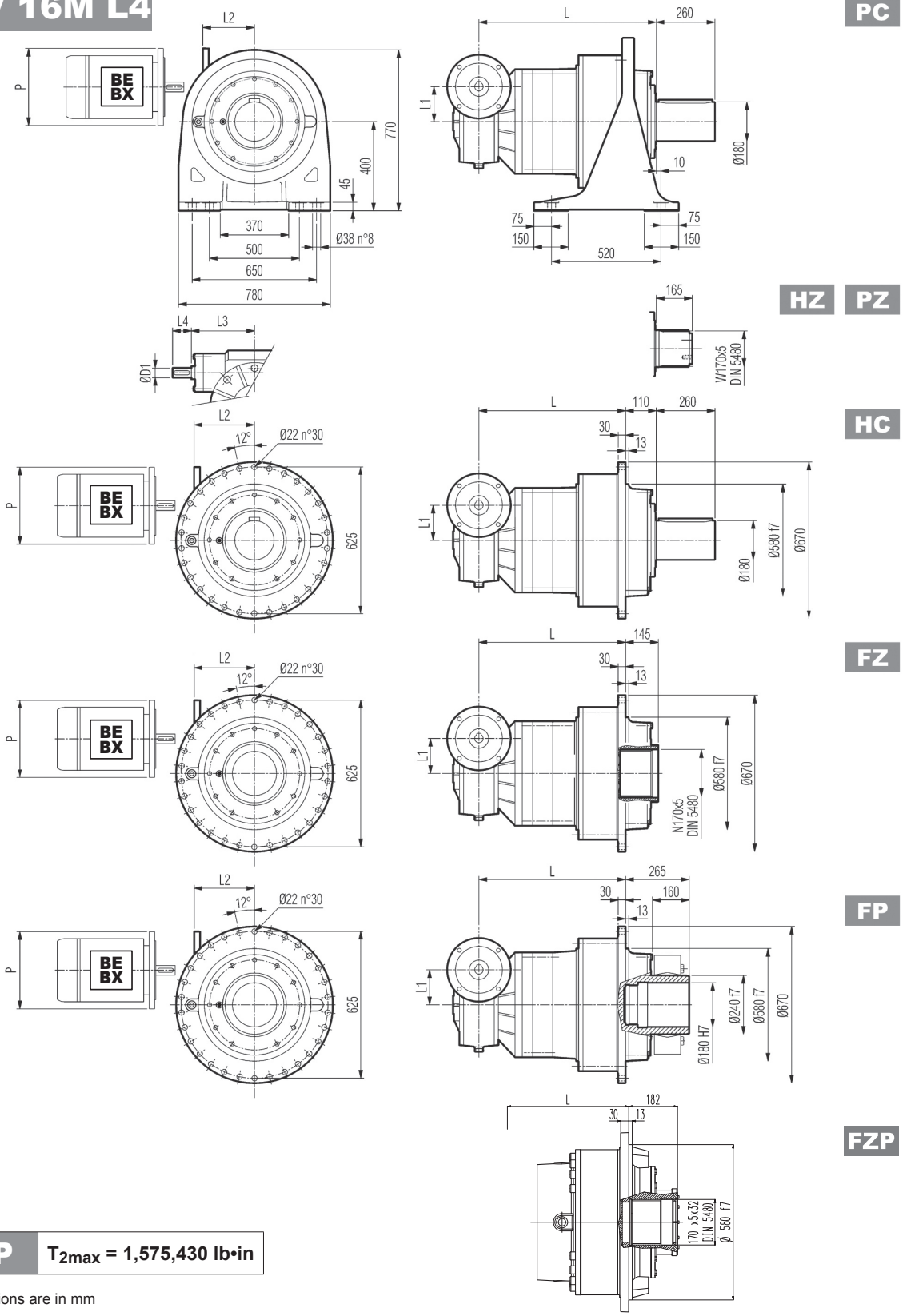

FP | **T_{2max} = 1,575,430 lb•in**

Dimensions are in mm

	L				L1	D1	L3	L4	Kg			
	PC - PZ	HC - HZ	FZ - FZP	FP					PC - PZ	HC - HZ	FZ - FZP	FP
3/V 16M L4	865	755	755	755	150	35	185	65	900	700	630	650

	P100		P112		P132		P160	
	L2	P	L2	P	L2	P	L2	P
3/V 16M L4	190	250	190	250	190	300	190	350

Bonfiglioli Riduttori

316M L | 316M R | 3/V 16M L

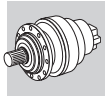

Metric

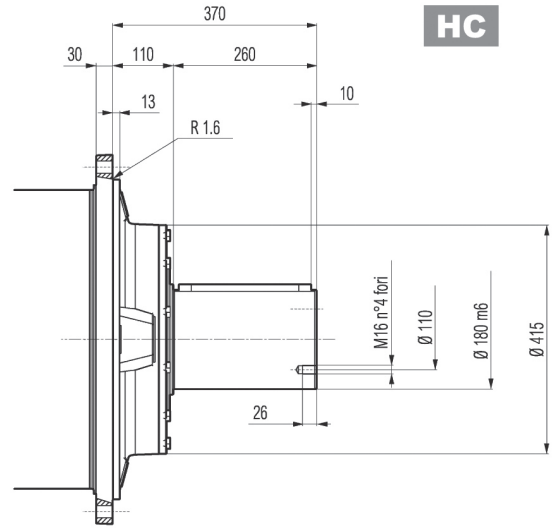

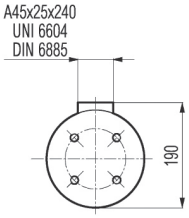

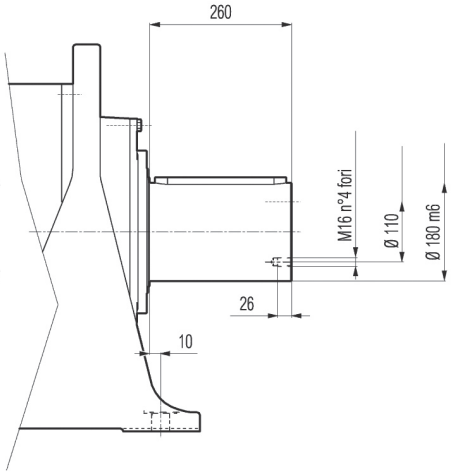

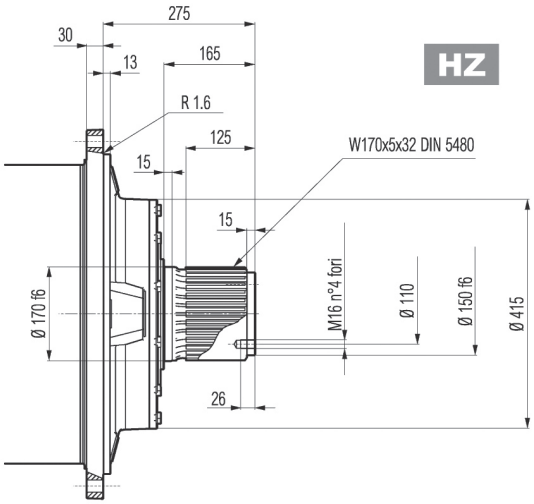

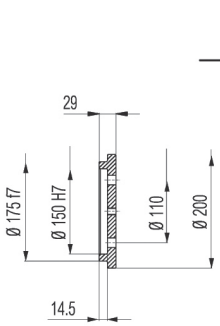

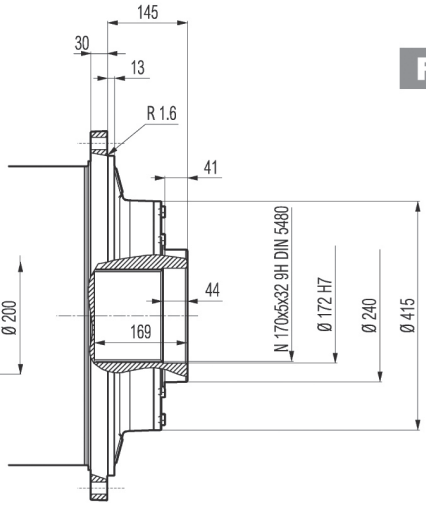

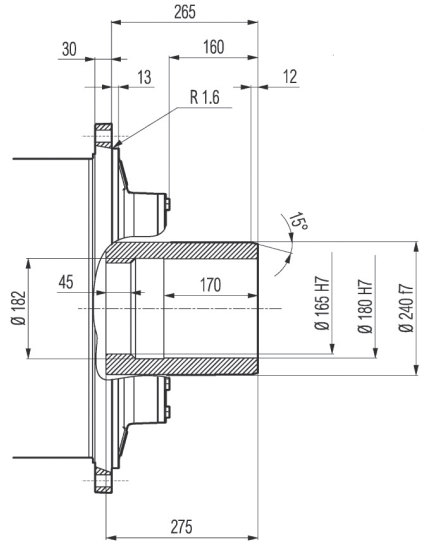

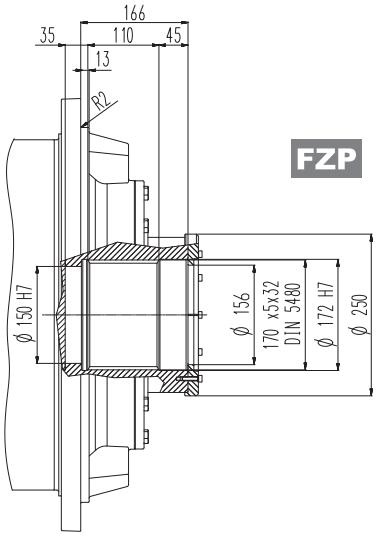

FP	T_{2max} = 1,575,430 lb•in

Dimensions are in mm

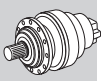

Metric

Flange

W0A

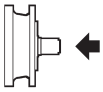

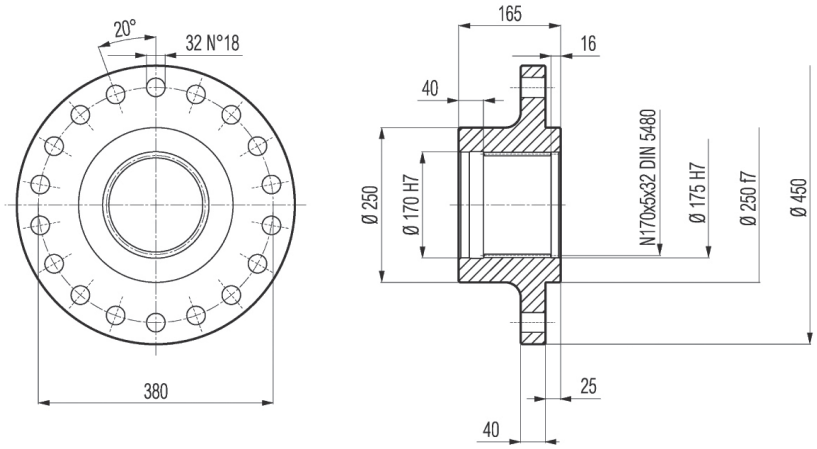

Material: Steel C40

Dimensions are in mm

Sleeve coupling

M0A

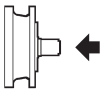

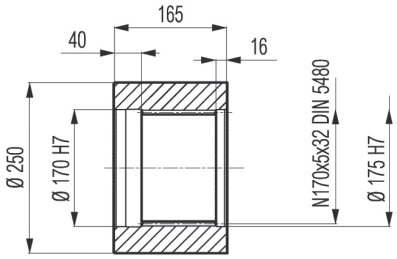

Material: Steel C40

Dimensions are in mm

Splined bars

B0A

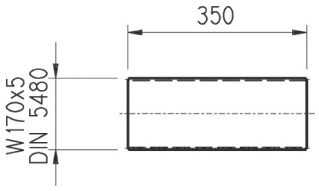

Material: Case hardening steel 18NiCrMo5 UNI 5331
must be case hardened 50-55 HRC

Shrink disc

G0A

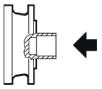

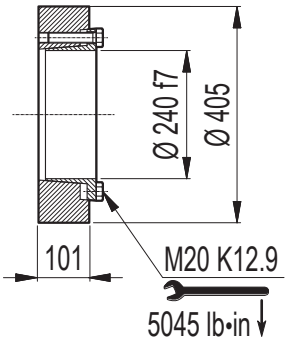

Dimensions are in mm

Bonfiglioli Riduttori

316M L 316M R

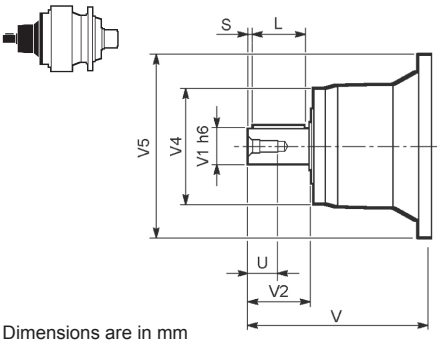

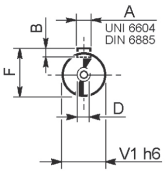

V_ _

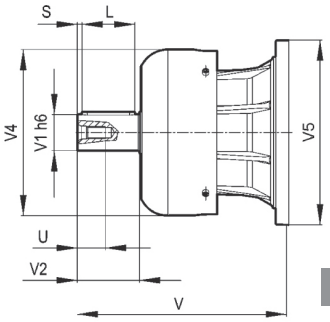

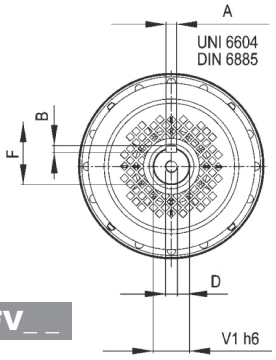

FV_ _

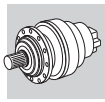

Metric

Dimensions are in mm

		V	V1	V2	V4	V5	A	B	F	L	S	D	U
316M L2	**V11B**	348	80	130	200	428	22	14	85	110	10	M16	36
	FV11B	456	80	130	347.5	428	22	14	85	110	10	M16	36
316M L3	**V07B**	315	80	130	200	345	22	14	85	110	10	M16	36
	FV07B	375	80	130	347.5	348	22	14	85	110	10	M16	36
	V07A	313	60	105	155	345	18	11	64	90	7.5	M16	36
	FV07A	363	60	105	309	348	18	11	64	90	7.5	M16	36
316M L4	**V05B**	239	48	82	155	245	14	9	51.5	70	6	M16	36
	FV05B	276	48	82	219.5	244	14	9	51.5	70	6	M16	36
316M R3 (B) (C)	**V06B**	307	60	105	155	292	18	11	64	90	7.5	M16	36
	FV06B	357	60	105	309	292	18	11	64	90	7.5	M16	36
316M R4	**V05B**	239	48	82	155	245	14	9	51.5	70	6	M16	36
	FV05B	276	48	82	219.5	244	14	9	51.5	70	6	M16	36

316M L 316M R

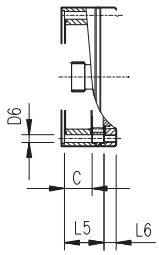

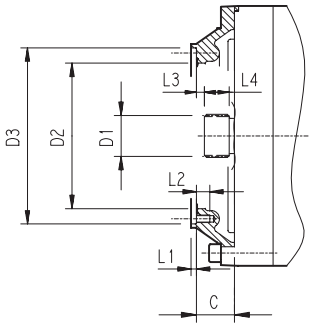

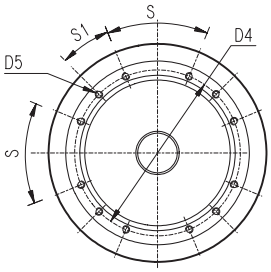

Dimensions are in mm

		C	D1	D2	D3	D4	D5	D6	L1	L2	L3	L4	L5	L6	S	S1	Input
316M L1	**V9AE**	156	100x94 DIN 5482	340	412 H7	390	M16 n° 18	—	7	30	8	55	—	—	20°	20°	E
316M L2	**V9AD**	81	80x74 DIN 5482	270	335 H7	314	M16 n° 8	—	5	30	8.5	40	—	—	60°	30°	D
316M L3	**V9AB**	51	58x53 DIN 5482	195	236 H7	222	M10 n° 12	—	4	18	11	22	—	—	45°	22.5°	B
316M L4	**V9AA**	37	40x36 DIN 5482	140	178 H7	165	M10 n° 8	—	4	18	9	18	—	—	45°	45°	A
316M R3 (B) (C)	**V9AB**	45	58x53 DIN 5482	195	236 H7	222	M10° 12	—	4	18	11	22	—	—	45°	22.5°	B
316M R4	**V9AA**	37	40x36 DIN 5482	140	178 H7	165	M10 n° 8	11	4	18	9	18	—	—	45°	45°	A

3/V 16M L

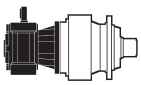

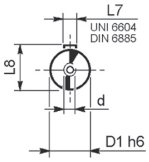

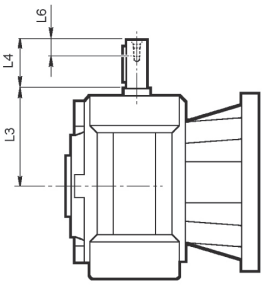

Dimensions are in mm

	D1 h6	L3	L4	L6	L7	L8	d
3/V 16M L3_HS	55	274	110	40	16	59	M16
3/V 16M L4_HS	35	185	65	20	10	38	M8

316M L 316M R

inch	Ⓣ
3.000	0 -0.00075
2.375	0 -0.00053
1.875	0 -0.00053

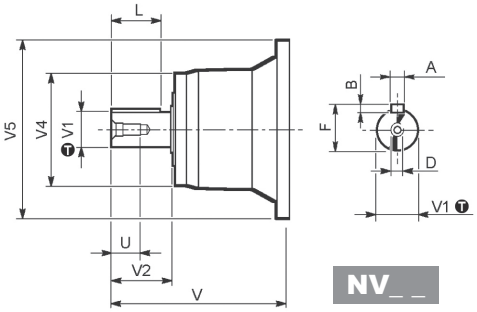

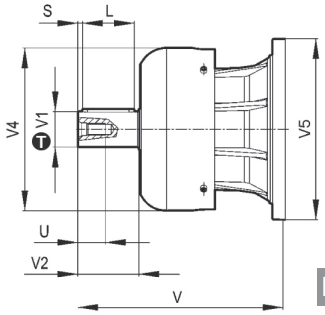

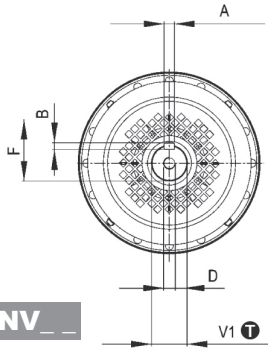

Dimensions are in Inch except when shown in *italic [mm]*

		V	V1	V2	V4	V5	A	B	F	L	D	U
316M L2	**NV11B**	13.563	3.000	5.000	8.160	16.850	0.750	0.750	3.328	4.374	3/4-10 UNC	1.654
	FNV11B	17.835	3.000	5.000	13.678	16.850	0.750	0.750	3.328	4.374	3/4-10 UNC	1.654
316M L3	**NV07B**	12.283	3.000	5.000	7.165	13.699	0.750	0.750	3.328	4.374	3/4-10 UNC	1.654
	FNV07B	14.646	3.000	5.000	13.677	13.699	0.750	0.750	3.328	4.374	3/4-10 UNC	1.654
	NV07A	13.130	2.375	4.750	6.024	13.700	0.625	0.625	2.645	4.250	3/4-10 UNC	1.654
	FNV07A	15.104	2.375	4.750	6.811	13.700	0.625	0.625	2.645	4.250	3/4-10 UNC	1.654
316M L4	**NV05B**	9.681	1.875	3.500	6.417	9.606	0.500	0.500	2.091	3.000	5/8-11 UNC	1.417
	FNV05B	11.138	1.875	3.500	8.641	9.606	0.500	0.500	2.091	3.000	5/8-11 UNC	1.417
316M R3 (B) (C)	**NV06B**	12.703	2.375	4.750	6.417	11.496	0.625	0.625	2.646	4.252	3/4-10 UNC	1.654
	FNV06B	14.652	2.375	4.750	12.165	11.496	0.625	0.625	2.646	4.252	3/4-10 UNC	1.654
316M R4	**NV05B**	9.681	1.875	3.500	6.417	9.606	0.500	0.500	2.091	3.000	5/8-11 UNC	1.417
	FNV05B	11.138	1.875	3.500	8.641	9.606	0.500	0.500	2.091	3.000	5/8-11 UNC	1.417

316M L 316M R

inch	Ⓣ
16.22	+0.00248 0
13.19	+0.00224 0
9.29	+0.00181 0
7.01	+0.00157 0

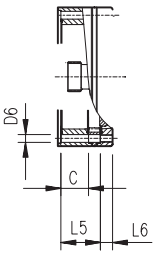

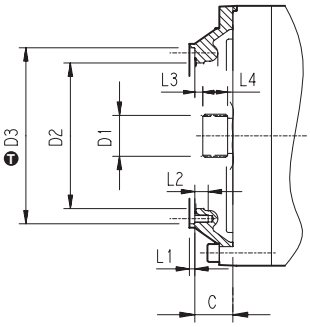

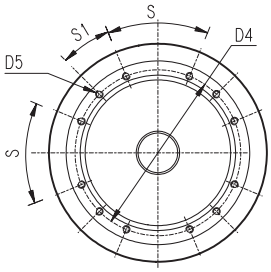

Dimensions are in Inch except when shown in *italic [mm]*

		C	D1	D2	D3	D4	D5	D6	L1	L2	L3	L4	L5	L6	S	S1	Input
316M L1	**V9AE**	6.14	*100x94 DIN 5482*	13.39	16.22	15.35	*M16 n° 18*	—	0.28	1.18	0.31	2.17	—	—	20°	20°	E
316M L2	**V9AD**	3.19	*80x74 DIN 5482*	10.63	13.19	12.36	*M16 n° 8*	—	0.20	1.18	0.33	1.57	—	—	60°	30°	D
316M L3	**V9AB**	2.01	*58x53 DIN 5482*	7.68	9.29	8.74	*M10 n° 12*	—	0.16	0.71	0.43	0.87	—	—	45°	22.5°	B
316M L4	**V9AA**	1.46	*40x36 DIN 5482*	5.51	7.01	6.50	*M10 n° 8*	—	0.16	0.71	0.35	0.71	—	—	45°	45°	A
316M R3 (B) (C)	**V9AB**	1.77	*58x53 DIN 5482*	7.68	9.29	8.74	*M10° 12*	—	0.16	0.71	0.43	0.87	—	—	45°	22.5°	B
316M R4	**V9AA**	1.46	*40x36 DIN 5482*	5.51	7.01	6.50	*M10 n° 8*	0.43	0.16	0.71	0.35	0.71	—	—	45°	45°	A

Permissible radial and axial loads on output shaft with $Fh_2 : n_2 \cdot h = 100000$

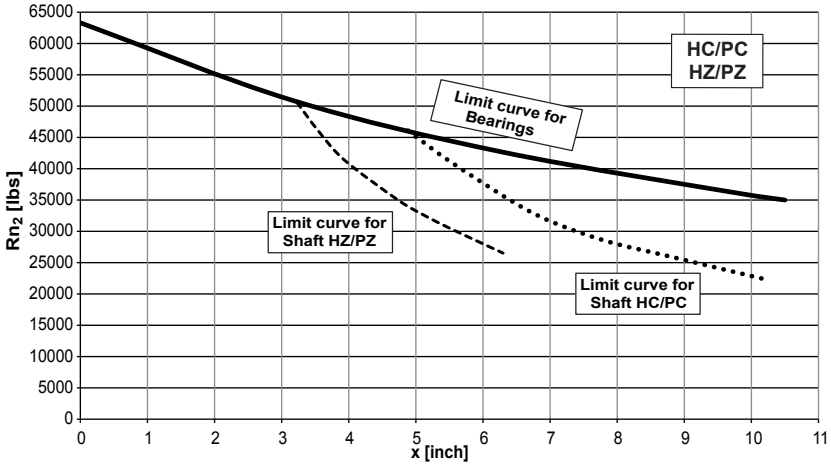

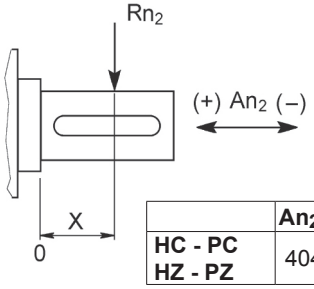

	An_2 (+)	An_2 (-)
HC - PC HZ - PZ	40464	33720

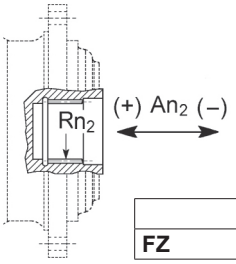

	Rn_2	An_2 (+/-)
FZ	15651	15651

		$Fh_2 = n_2 \cdot h$	10000	25000	50000	100000	500000	1000000
Load corrective factor fh_2 on shafts	fh_2	FZ	**2.15**	**1.59**	**1.26**	**1.00**	**0.58**	**0.46**
		HC - PC	**1.16**	**1.00**	**1.00**	**1.00**	**0.62**	**0.50**
		HZ - PZ	**1.19**	**1.02**	**1.02**	**1.00**	**0.62**	**0.50**

Permissible radial loads on input shaft with $Fh_1 : n_1 \cdot h = 250000$

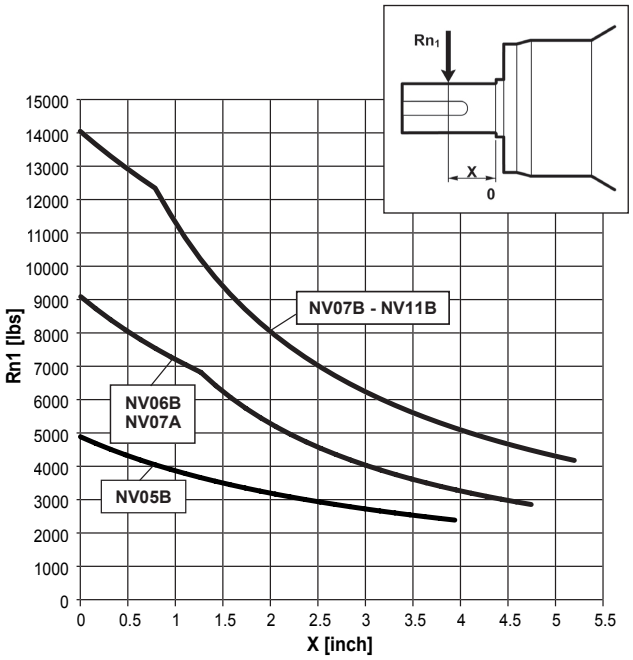

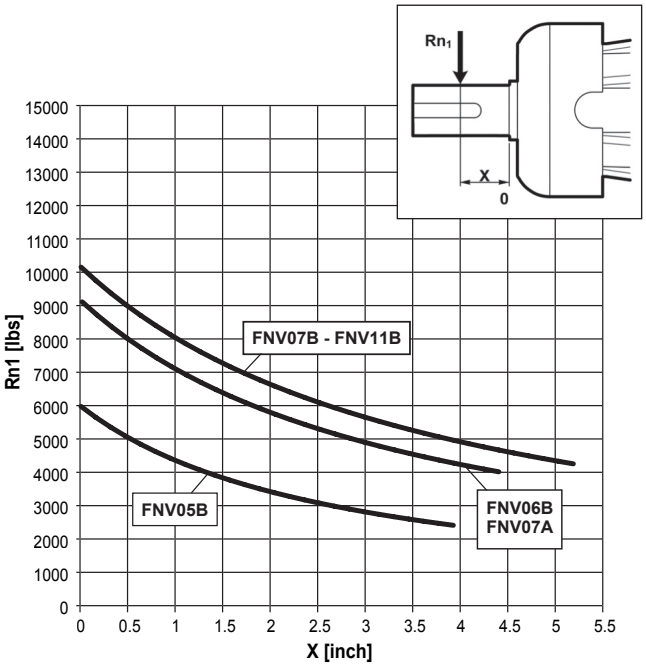

	$Fh_1 = n_1 \cdot h$	250000	500000	1000000	2000000	5000000	10000000
Load corrective factor fh_1 on shafts	fh_1	**1**	**0.79**	**0.63**	**0.50**	**0.37**	**0.29**

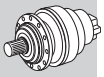

317M L

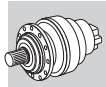

Metric

Imperial

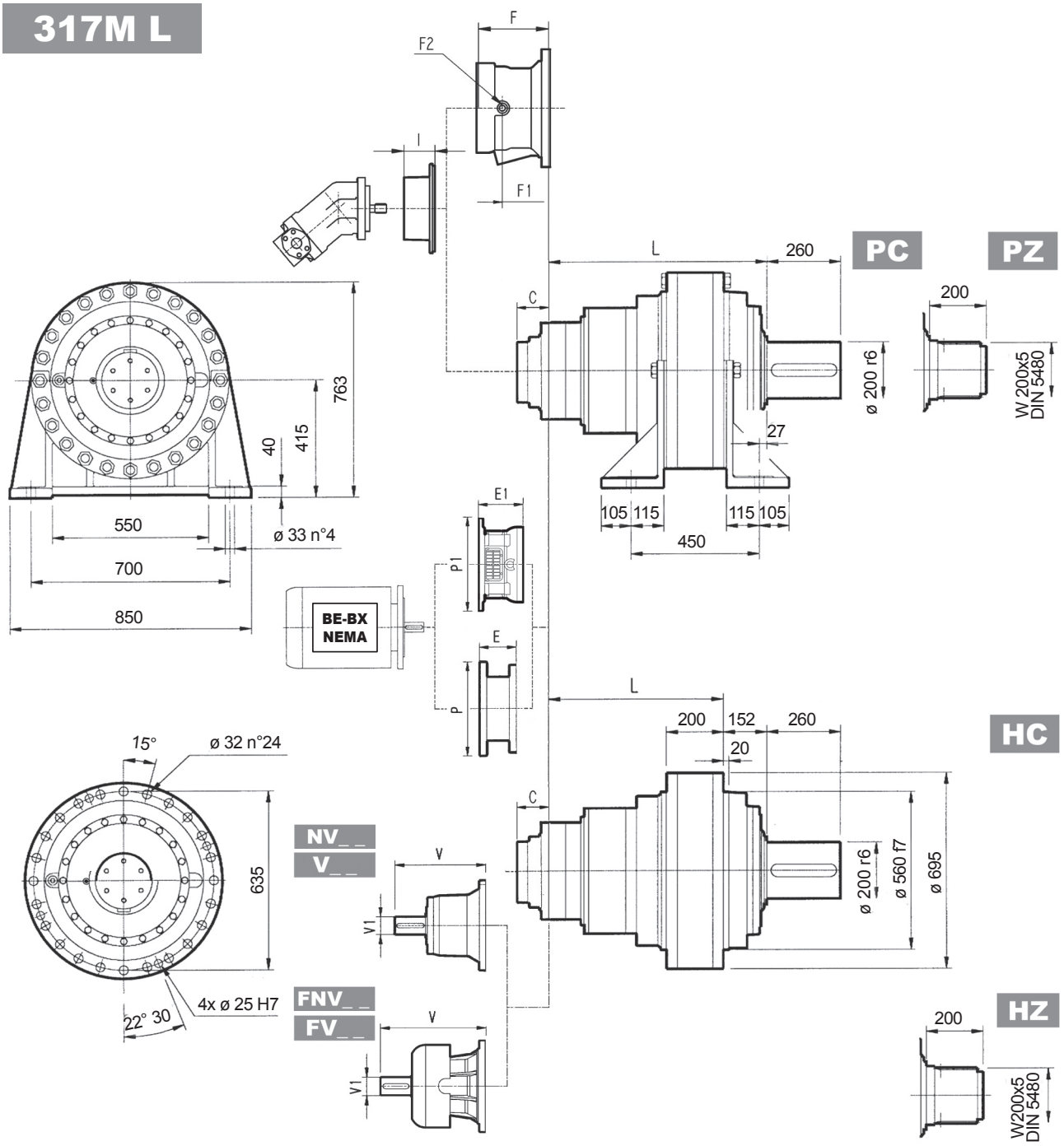

Dimensions are in mm when shown in italic, otherwise dimensions are in inches

	L				Kg							I						Kg
	PC - PZ	HC - HZ	FZ - FZP	FP	PC - PZ	HC - HZ	FZ - FZP	FP	C	C	Input		F	F1	F2	Type	Input	
317M L1	*315*	*163*	*163*	*163*	*950*	*800*	*750*	*800*	*181*	7.126	F		—	—	—	—	—	—
317M L2	*624*	*472*	*472*	*472*	*1080*	*930*	*880*	*930*	*75*	2.953	D		—	—	—	—	—	—
317M L3	*774*	*622*	*622*	*622*	*1140*	*990*	*940*	*990*	*51*	2.008	B		*201*	*153*	1/4 G	6	B	*28*
317M L4	*862*	*710*	*710*	*710*	*1152*	*1000*	*952*	*1000*	*37*	1.457	A	532	*145*	*95*	1/4 G	5	A	*16*

	V_ _						FV_ _						NV_ _						FNV_ _					
	V	V1	Kg	V	V1	Kg	V	V1	Kg	V	V1	Kg	V	V1	lbs	V	V1	lbs	V	V1	lbs	V	V1	lbs
317M L1	—	—	—	—	—	—	—	—	—	—	—	—	—	—	—	—	—	—	—	—	—	—	—	—
317M L2	343	80	55	—	—	—	451	80	71	—	—	—	13.563	3.000	121.3	—	—	—	17.835	3.00	140.0	—	—	—
317M L3	315	80	35	313	60	28	375	80	48	363	60	34	13.130	2.375	29.8	12.283	3.000	77.2	15.104	2.375	38.0	14.646	3.00	90.0
317M L4	239	48	15	—	—	—	276	48	17	—	—	—	9.681	1.875	33.1	—	—	—	11.138	1.875	38.0	—	—	—

317M L

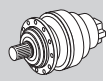

Metric

Imperial

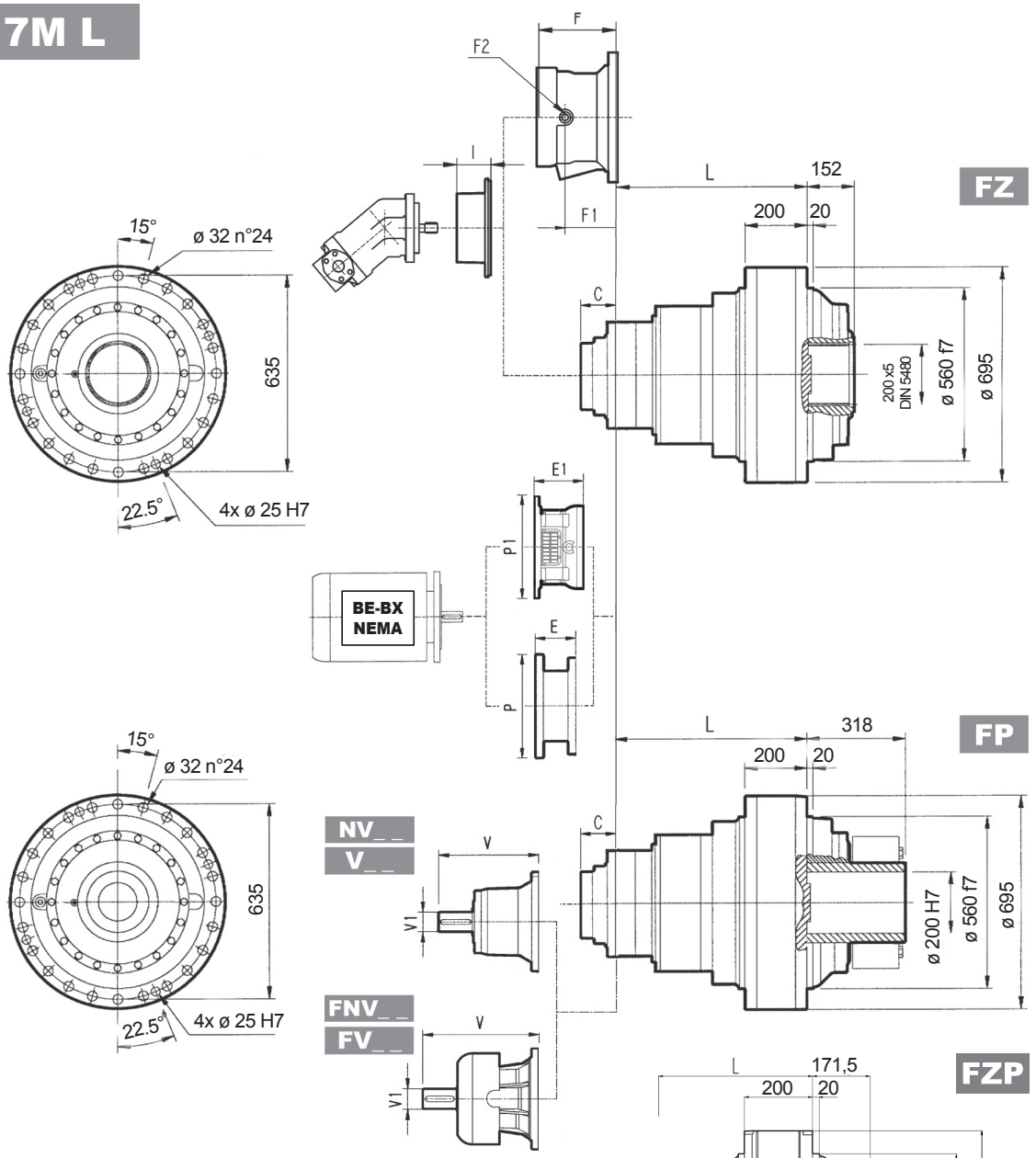

	PF 160		PF 180		PF 200		PF225		PF 250	
	E1	P1	E1	P1	E1	P1	E1	P1	E1	P1
317M L3	—	—	—	—	*197*	*530*	*227*	*530*	*227*	*550*
317M L4	*165*	*400*	*165*	*400*	*195*	*400*	*195*	*450*	—	—

	PF N250TC		PF N280TC		PF N320TC		PF N360TC	
	E1	P1	E1	P1	E1	P1	E1	P1
317M L3	—	—	—	—	9.921	20.866	11.496	20.866
317M L4	8.661	15.748	8.661	15.748	9.843	15.748	10.236	17.717

NOTE: for R design contact Bonfiglioli Technical Service
for PF N400TC contact Bonfiglioli Technical Service

FP T_{2max} = 2,141,880 lb•in

Dimensions are in mm when shown in italic, otherwise dimensions are in inches

	P132		P160		P180		P200		P225		P250	
	E	P	E	P	E	P	E	P	E	P	E	P
317M L3	—	—	—	—	*196*	*350*	*186*	*400*	*216*	*450*	*216*	*550*
317M L4	*114*	*300*	*144*	*350*	*144*	*350*	*174*	*400*	—	—	—	—

	N250TC		N280TC		N320TC		N360TC	
	E	P	E	P	E	P	E	P
317M L3	—	—	—	—	8.445	15.748	8.445	15.748
317M L4	5.216	11.811	6.221	13.780	—	—	—	—

317M R

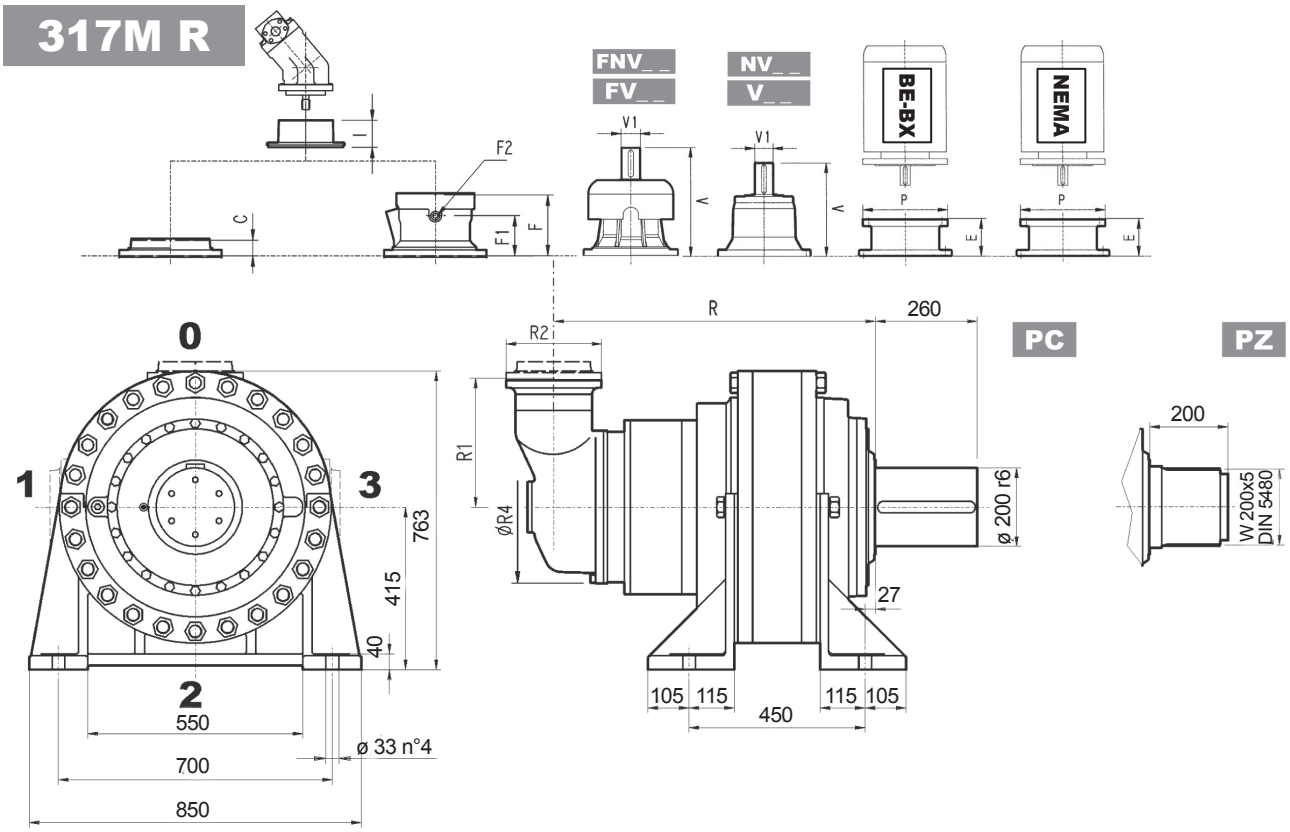

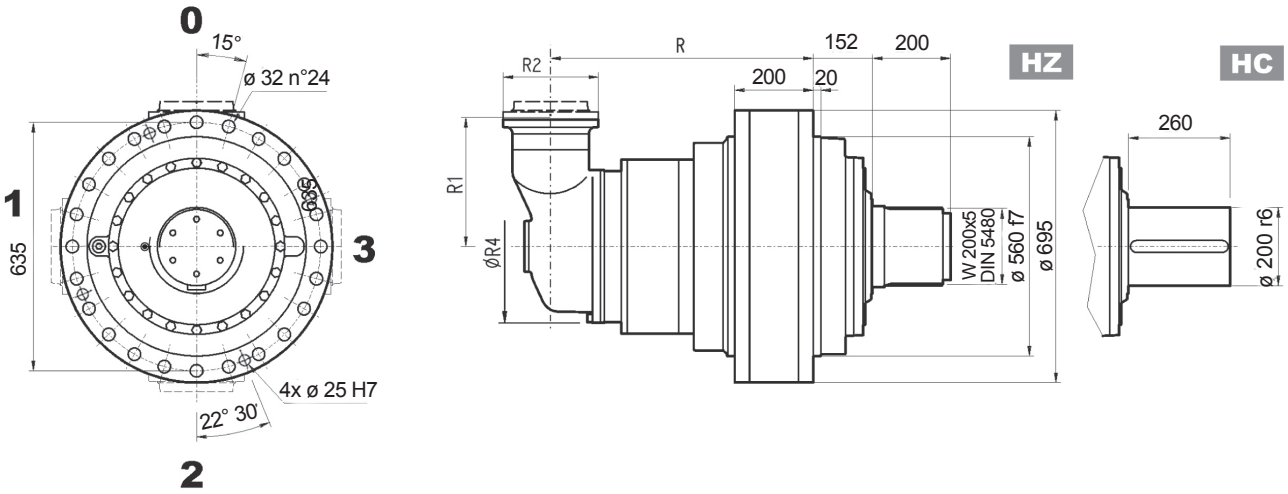

Dimensions are in mm when shown in italic, otherwise dimensions are in inches

	R				R1	R2	R4	Kg													Kg
	PC-PZ	HC-HZ	FZ - FZP	FP				PC-PZ	HC-HZ	FZ - FZP	FP	C	C	Input	I	F	F1	F2	Type	Input	Kg
317M R3 (B)	*853*	*701*	*701*	*701*	*345*	*292*	*400*	*1210*	*1060*	*1010*	*1060*	*45*	1.772	B		*195*	*147*	1/4 G	6	B	*28*
317M R3 (C)	*853*	*701*	*701*	*701*	*390*	*292*	*480*	*1220*	*1070*	*1020*	*1070*	*45*	1.772	B		*195*	*147*	1/4 G	6	B	*28*
317M R4	*892*	*740*	*740*	*740*	*225*	*245*	*345*	*1190*	*1040*	*990*	*1040*	*37*	1.457	A	532	*105*	*65*	1/4 G	4	A	*10*

	V_ _			FV_ _			NV_ _			FNV_ _		
	V	V1	Kg	V	V1	Kg	V	V1	lbs	V	V1	lbs
317M R3 (B)	*307*	*60*	*23*	*357*	*60*	*28*	12.703	2.375	50.7	14.652	2.375	58.0
317M R3 (C)	*307*	*60*	*23*	*357*	*60*	*28*	12.703	2.375	50.7	14.652	2.375	58.0
317M R4	*239*	*48*	*15*	*276*	*48*	*17*	9.681	1.875	33.1	11.138	1.875	38.0

317M R

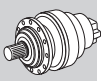

Metric

Imperial

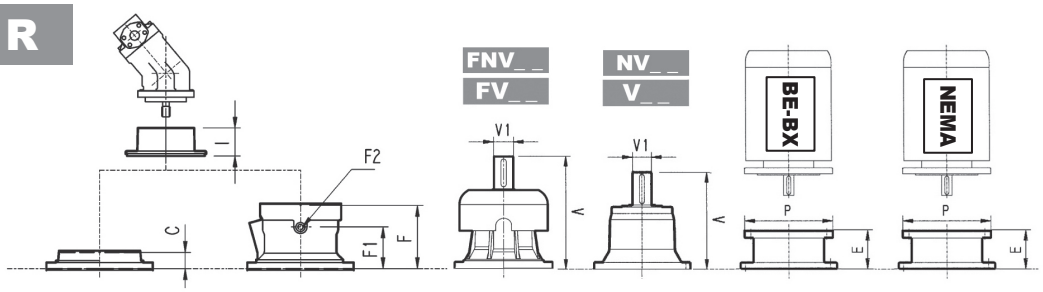

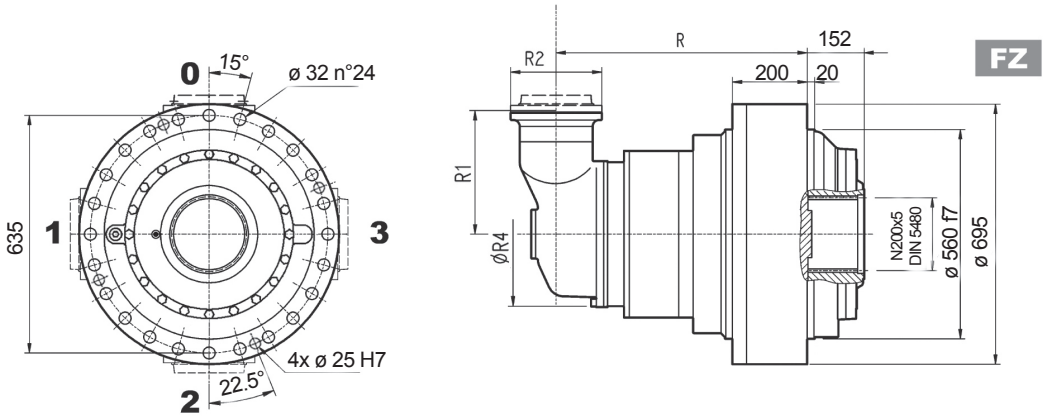

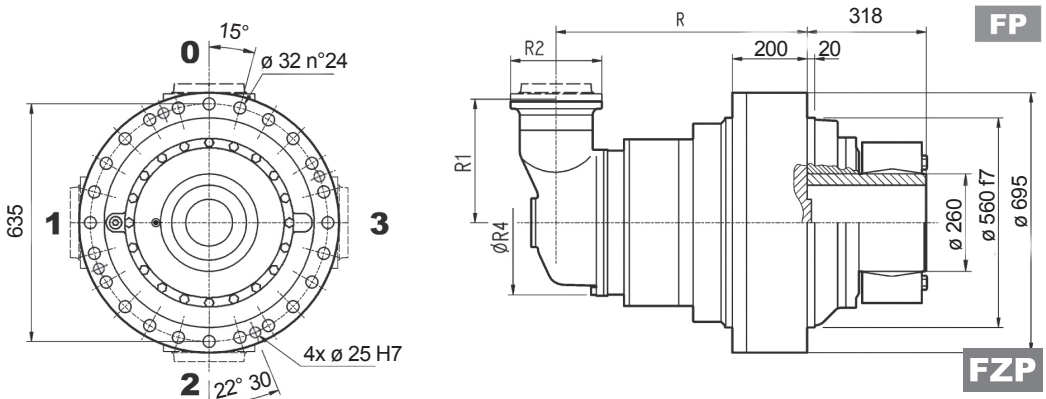

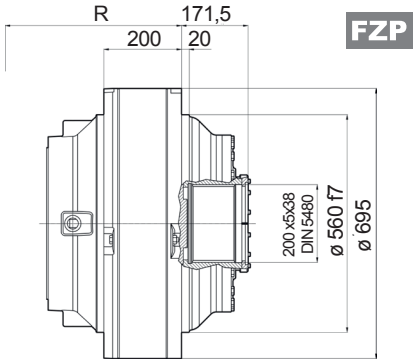

FP	T_{2max} = 2,141,880 lb•in

Dimensions are in mm when shown in italic, otherwise dimensions are in inches

	P132		P160		P180		P200		P225		P250	
	E	P	E	P	E	P	E	P	E	P	E	P
317M R3 (B)	—	—	—	—	*152*	*350*	*182*	*400*	*212*	*450*	*193*	*550*
317M R3 (C)	—	—	—	—	*152*	*350*	*182*	*400*	*212*	*450*	*193*	*550*
317M R4	*114*	*300*	*144*	*350*	*144*	*350*	*174*	*400*	—	—	—	—

	N250TC		N280TC		N320TC		N360TC	
	E	P	E	P	E	P	E	P
317M R3 (B)	—	—	—	—	7.776	13.780	7.776	13.780
317M R3 (C)	—	—	—	—	7.776	13.780	7.776	13.780
317M R4	5.216	11.811	6.221	13.780	—	—	—	—

3/V 17M L3

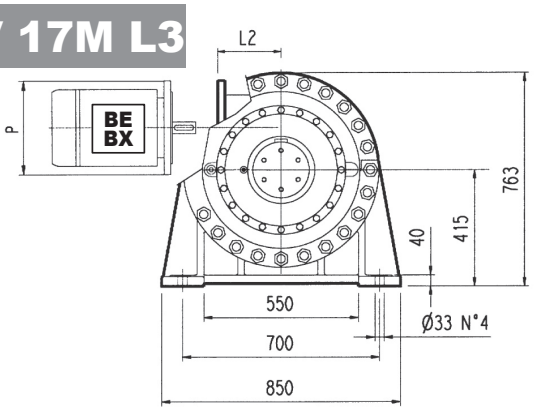

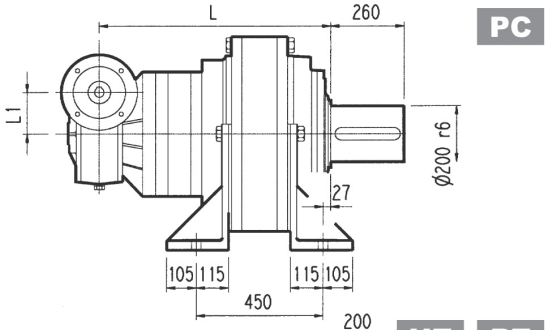

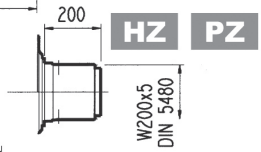

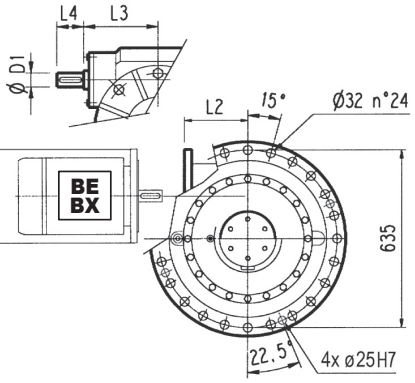

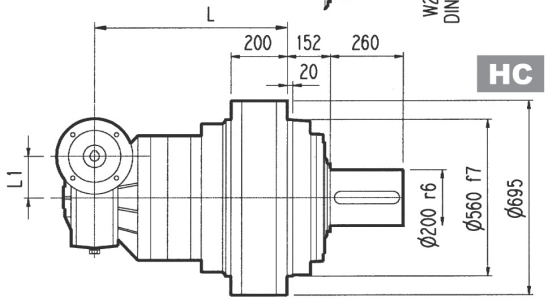

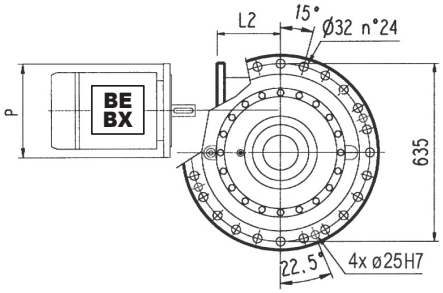

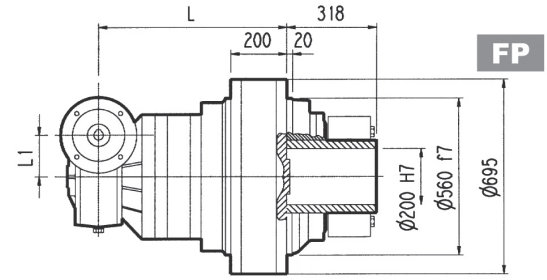

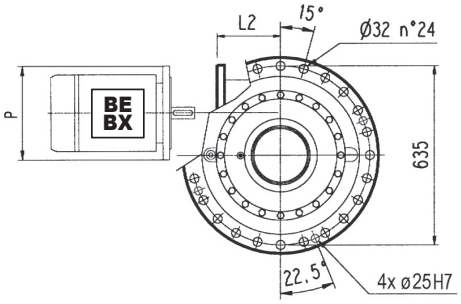

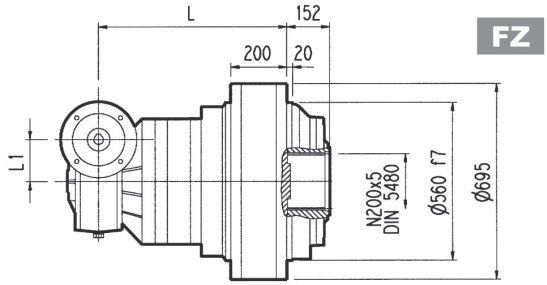

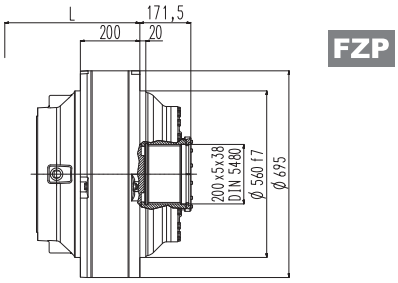

FP | **T_{2max} = 2,141,880 lb•in**

Dimensions are in mm

	L				L1	D1	L3	L4	Kg			
	PC - PZ	HC - HZ	FZ - FZP	FP					PC - PZ	HC - HZ	FZ - FZP	FP
3/V 17M L3	894	745	745	745	250	55	276	110	1400	1250	1200	1250

	P132		P160		P180		P200		P225	
	L2	P	L2	P	L2	P	L2	P	L2	P
3/V 17M L3	531	300	506	350	506	350	531	400	536	450

3/V 17M L4

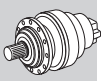

Metric

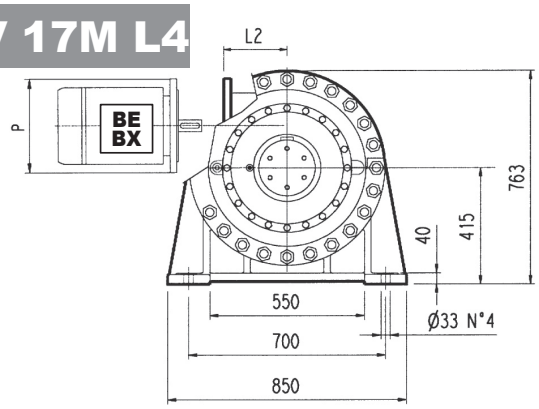

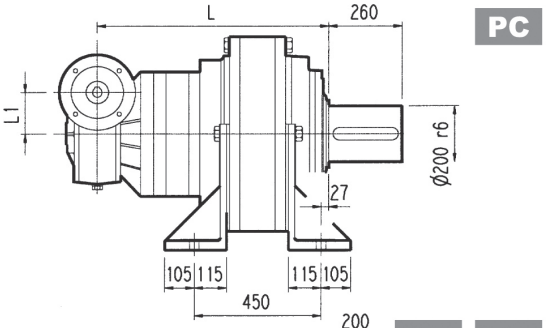

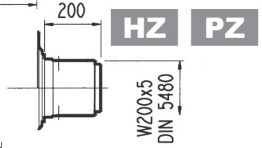

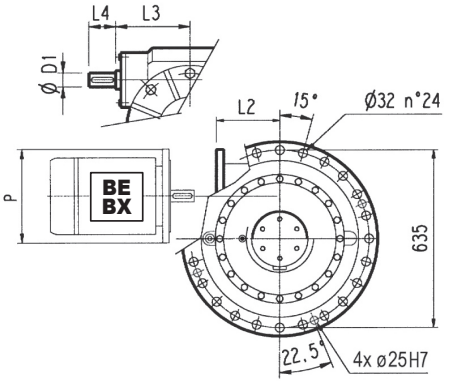

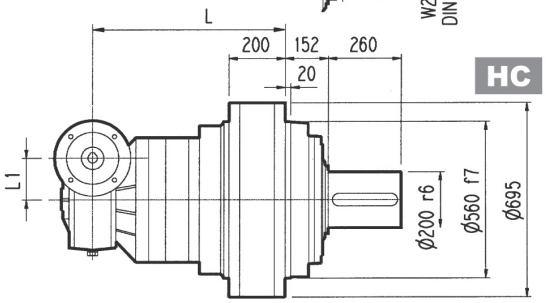

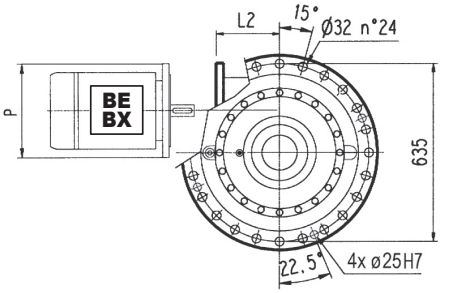

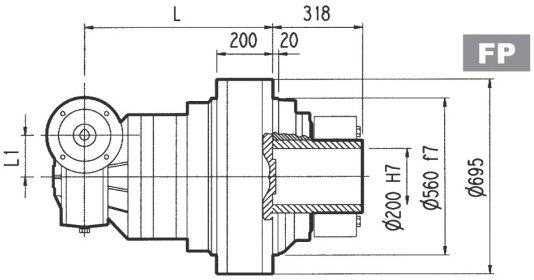

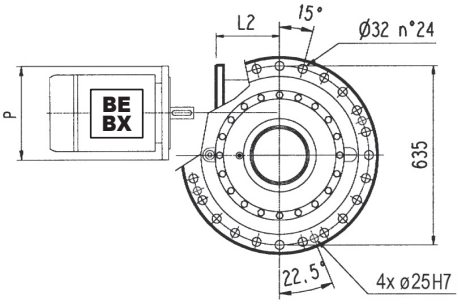

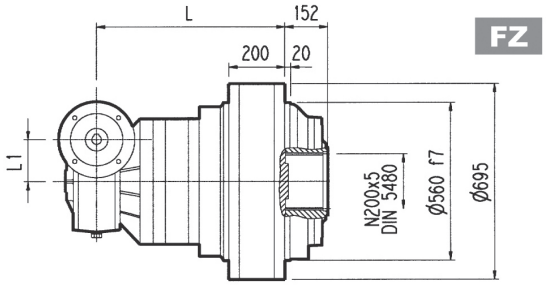

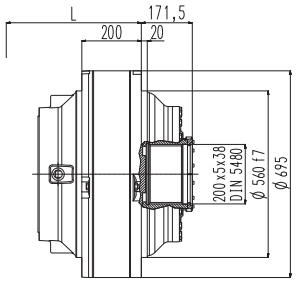

FP	T_{2max} = 2,141,880 lb•in

Dimensions are in mm

	L				L1	D1	L3	L4	Kg			
	PC - PZ	HC - HZ	FZ - FZP	FP					PC - PZ	HC - HZ	FZ - FZP	FP
3/V 17M L4	975	823	823	823	185.4	40	214.5	70	1250	1090	1040	1090

	P100	P112	P132		P160		P180	
	P	P	L2	P	L2	P	L2	P
3/V 17M L4	250	250	217	300	217	350	217	350

Bonfiglioli Riduttori

317M L | 317M R | 3/V 17M L

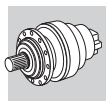

Metric

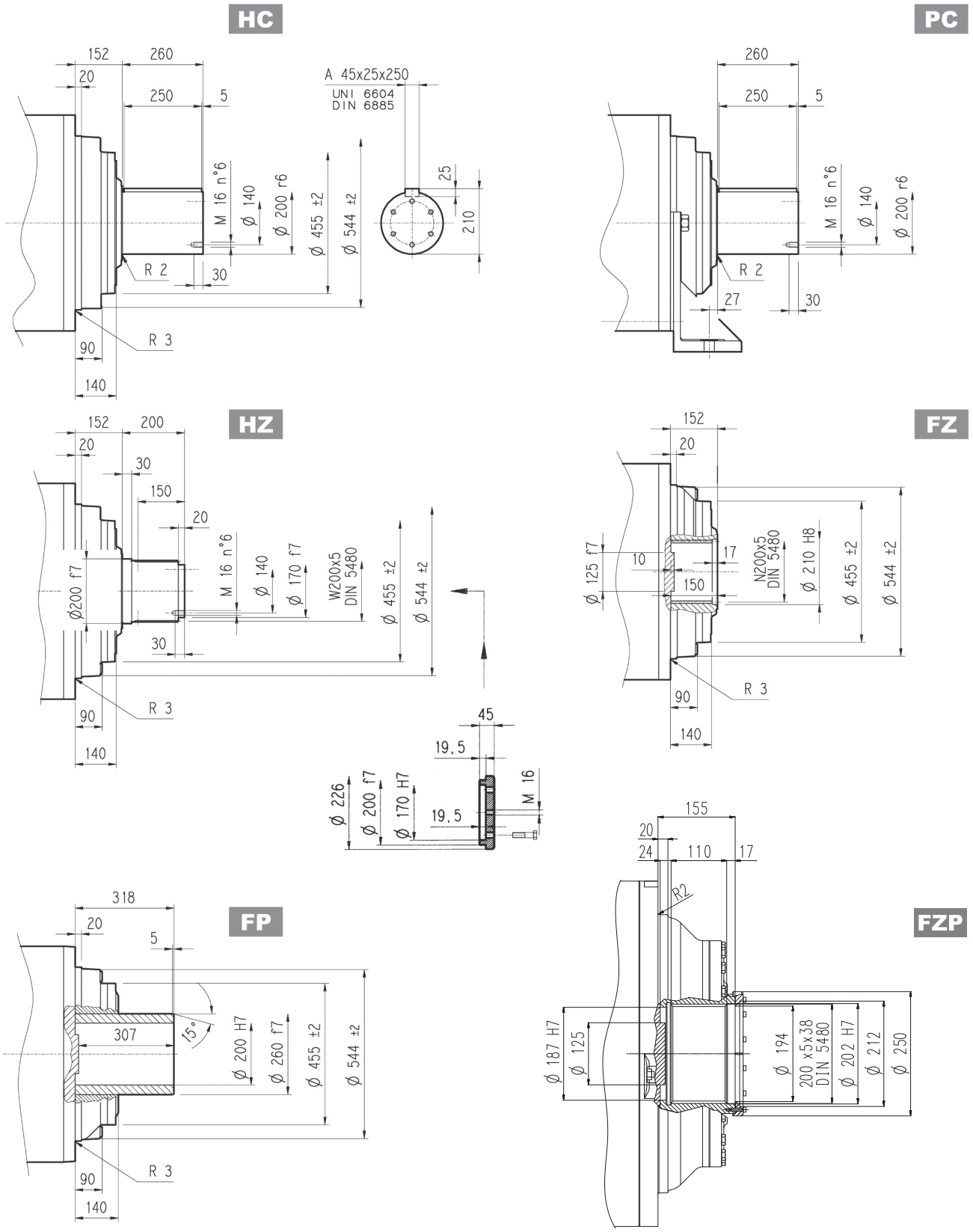

FP | **T_{2max} = 2,141,880 lb•in**

Dimensions are in mm

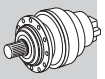

Metric

Flange

W0A

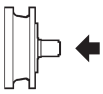

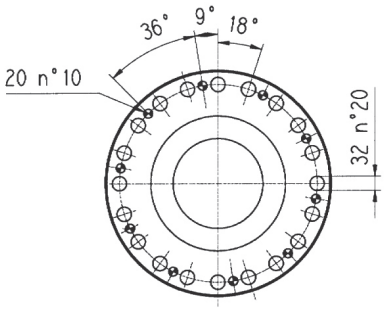

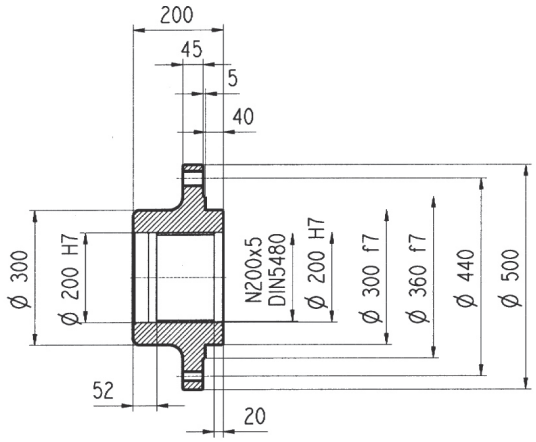

Material: Steel C40

Dimensions are in mm

Sleeve coupling

M0A

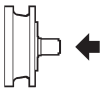

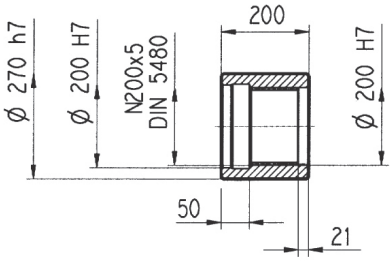

Material: Steel 16CrNi4

Dimensions are in mm

Shrink disc

G0A

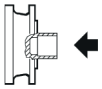

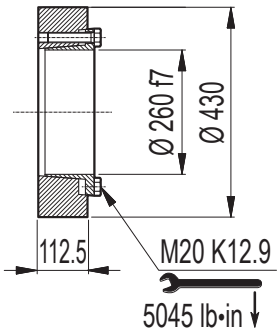

Dimensions are in mm

317M L 317M R

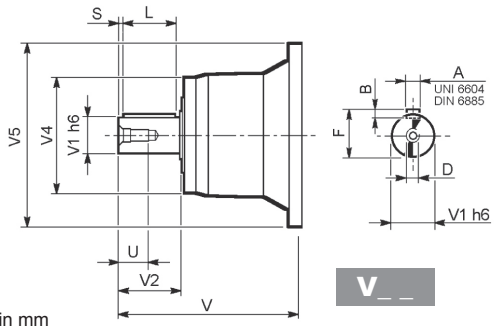

V_ _

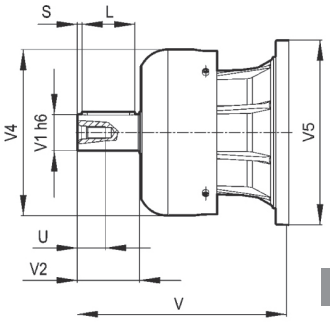

FV_ _

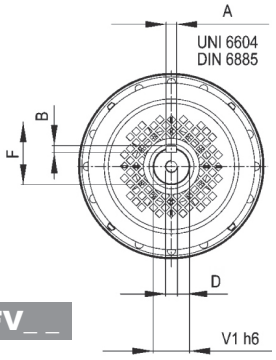

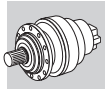

Metric

Dimensions are in mm

		V	V1	V2	V4	V5	A	B	F	L	S	D	U
317M L2	**V11B**	343	80	130	200	445	22	14	85	110	10	M16	36
	FV11B	451	80	130	347.5	445	22	14	85	110	10	M16	36
317M L3	**V07B**	315	80	130	200	345	22	14	85	110	10	M16	36
	FV07B	375	80	130	347.5	348	22	14	85	110	10	M16	36
	V07A	313	60	105	155	345	18	11	64	90	7.5	M16	36
	FV07A	363	60	105	309	348	18	11	64	90	7.5	M16	36
317M L4	**V05B**	239	48	82	155	245	14	9	51.5	70	6	M16	36
	FV05B	276	48	82	219.5	244	14	9	51.5	70	6	M16	36
317M R3 (B) (C)	**V06B**	307	60	105	155	292	18	11	64	90	7.5	M16	40
	FV06B	357	60	105	309	292	18	11	64	90	7.5	M16	36
317M R4	**V05B**	239	48	82	155	245	14	9	51.5	70	6	M16	36
	FV05B	276	48	82	219.5	244	14	9	51.5	70	6	M16	36

317M L 317M R

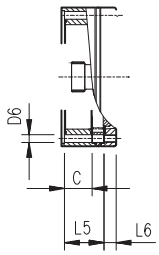

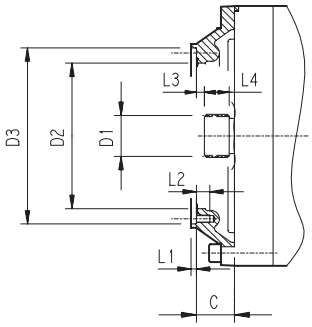

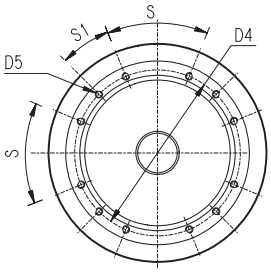

Dimensions are in mm

		C	D1	D2	D3	D4	D5	D6	L1	L2	L3	L4	L5	L6	S	S1	Input
317M L1	**V9AF**	181	120x3 DIN 5480	365	390 g7	415	M16 n°18	—	4	30	3	65	—	—	20°	20°	F
317M L2	**V9AD**	75	80x74 DIN 5482	270	335 H7	314	M16 n°8	—	5	30	9.5	40	—	—	60°	30°	D
317M L3	**V9AB**	51	58x53 DIN 5482	195	236 H7	222	M10 n°12	—	4	18	11	22	—	—	45°	22.5°	B
317M L4	**V9AA**	37	40x36 DIN 5482	140	178 H7	165	M10 n°8	—	4	18	9	18	—	—	45°	45°	A
317M R4	**V9AA**	37	40x36 DIN 5482	140	178 H7	165	M10 n°8	11	4	18	9	18	—	—	45°	45°	A
317M R3 (B) (C)	**V9AB**	45	58x53 DIN 5482	195	236 H7	222	M10 n°12	—	4	18	11	22	—	—	45°	22.5°	B

3/V 17M L

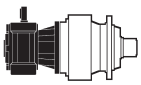

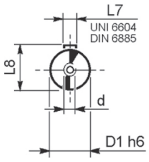

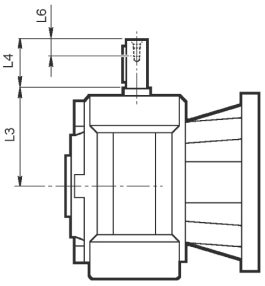

Dimensions are in mm

	D1 h6	L3	L4	L6	L7	L8	d
3/V 17M L3_HS	55	276	110	40	16	59	M16
3/V 17M L4_HS	40	214.5	70	20	12	43	M8

317M L 317M R

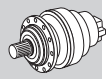

inch	Ⓣ
3.000	0 / -0.00075
2.375	0 / -0.00053
1.875	0 / -0.00053

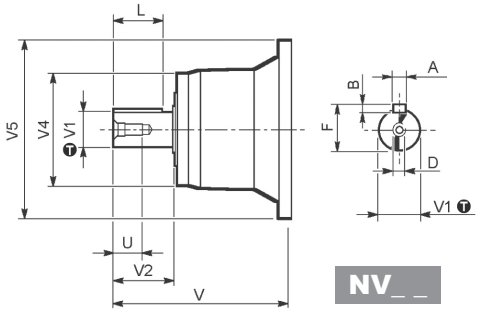

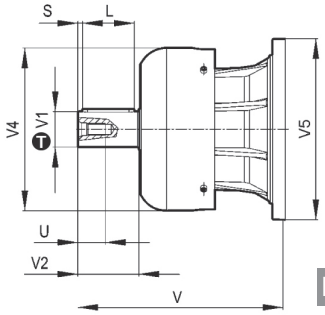

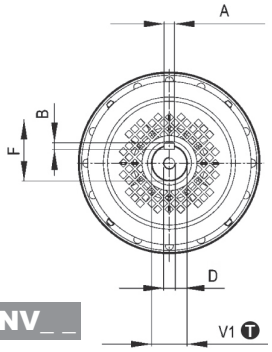

Dimensions are in Inch except when shown in *italic [mm]*

		V	V1	V2	V4	V5	A	B	F	L	D	U
317M L2	**NV11B**	13.563	3.000	5.000	8.160	16.850	0.750	0.750	3.328	4.374	3/4-10 UNC	1.654
	FNV11B	17.835	3.000	5.000	13.678	16.850	0.750	0.750	3.328	4.374	3/4-10 UNC	1.654
317M L3	**NV07B**	12.283	3.000	5.000	7.165	13.699	0.750	0.750	3.328	4.374	3/4-10 UNC	1.654
	FNV07B	14.646	3.000	5.000	13.677	13.699	0.750	0.750	3.328	4.374	3/4-10 UNC	1.654
	NV07A	13.130	2.375	4.750	6.024	13.700	0.625	0.625	2.645	4.250	3/4-10 UNC	1.654
	FNV07A	15.104	2.375	4.750	6.811	13.700	0.625	0.625	2.645	4.250	3/4-10 UNC	1.654
317M L4	**NV05B**	9.681	1.875	3.500	6.417	9.606	0.500	0.500	2.091	3.000	5/8-11 UNC	1.417
	FNV05B	11.138	1.875	3.500	8.641	9.606	0.500	0.500	2.091	3.000	5/8-11 UNC	1.417
317M R3 (B) (C)	**NV06B**	12.703	2.375	4.750	6.417	11.496	0.625	0.625	2.646	4.252	3/4-10 UNC	1.654
	FNV06B	14.652	2.375	4.750	12.165	11.496	0.625	0.625	2.646	4.252	3/4-10 UNC	1.654
317M R4	**NV05B**	9.681	1.875	3.500	6.417	9.606	0.500	0.500	2.091	3.000	5/8-11 UNC	1.417
	FNV05B	11.138	1.875	3.500	8.641	9.606	0.500	0.500	2.091	3.000	5/8-11 UNC	1.417

317M L 317M R

inch	Ⓣ
15.35	-0.000708 / -0.00295
13.19	+0.00224 / 0
9.29	+0.00181 / 0
7.01	+0.00157 / 0

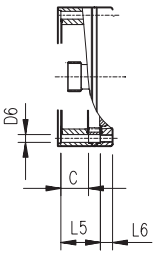

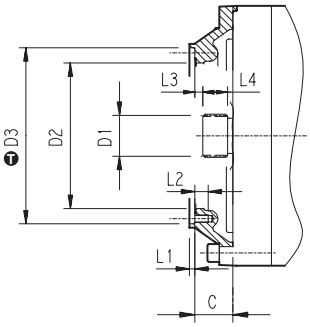

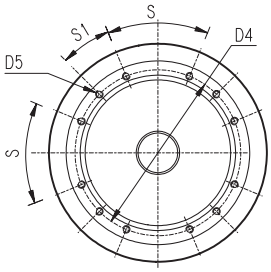

Dimensions are in Inch except when shown in *italic [mm]*

		C	D1	D2	D3	D4	D5	D6	L1	L2	L3	L4	L5	L6	S	S1	Input
317M L1	**V9AF**	7.13	*120x3 DIN 5480*	14.37	15.35	16.34	*M16 n°18*	—	0.16	1.18	0.12	2.56	—	—	20°	20°	F
317M L2	**V9AD**	2.95	*80x74 DIN 5482*	10.63	13.19	12.36	*M16 n°8*	—	0.20	1.18	0.37	1.57	—	—	60°	30°	D
317M L3	**V9AB**	2.01	*58x53 DIN 5482*	7.68	9.29	8.74	*M10 n°12*	—	0.16	0.71	0.43	0.87	—	—	45°	22.5°	B
317M L4	**V9AA**	1.46	*40x36 DIN 5482*	5.51	7.01	6.50	*M10 n°8*	—	0.16	0.71	0.35	0.71	—	—	45°	45°	A
317M R4	**V9AA**	1.46	*40x36 DIN 5482*	5.51	7.01	6.50	*M10 n°8*	0.43	0.16	0.71	0.35	0.71	—	—	45°	45°	A
317M R3 (B) (C)	**V9AB**	1.77	*58x53 DIN 5482*	7.68	9.29	8.74	*M10 n°12*	—	0.16	0.71	0.43	0.87	—	—	45°	22.5°	B

317M L 317M R 3/V 17M L

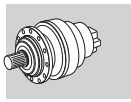

Imperial

Permissible radial and axial loads on output shaft with $Fh_2 : n_2 \cdot h = 100000$

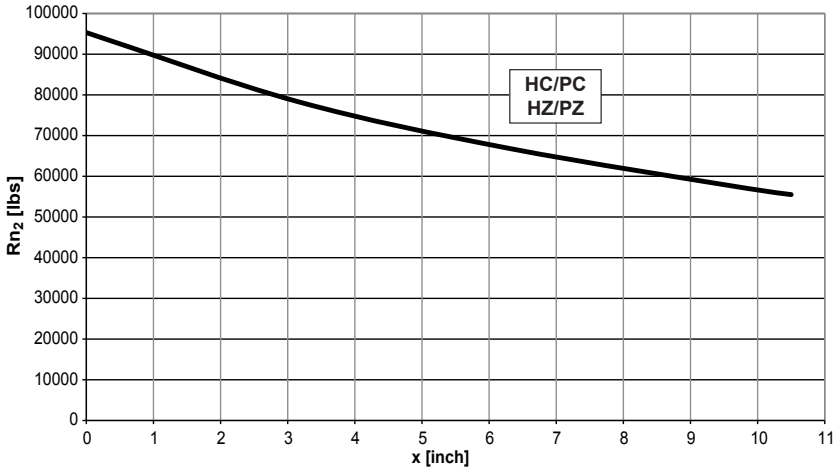

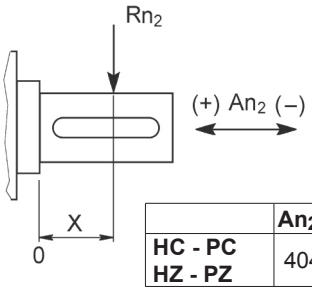

	An_2 (+)	An_2 (-)
HC - PC HZ - PZ	40464	33720

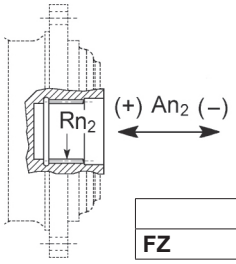

	Rn_2	An_2 (+/-)
FZ	15651	15651

Load corrective factor fh_2 on shafts	$Fh_2 = n_2 \cdot h$		10000	25000	50000	100000	500000	1000000
	fh_2	FZ	**2.15**	**1.59**	**1.26**	**1.00**	**0.58**	**0.46**
		HZ - HC - PZ - PC	**1.50**	**1.50**	**1.23**	**1.00**	**0.62**	**0.50**

Permissible radial loads on input shaft with $Fh_1 : n_1 \cdot h = 250000$

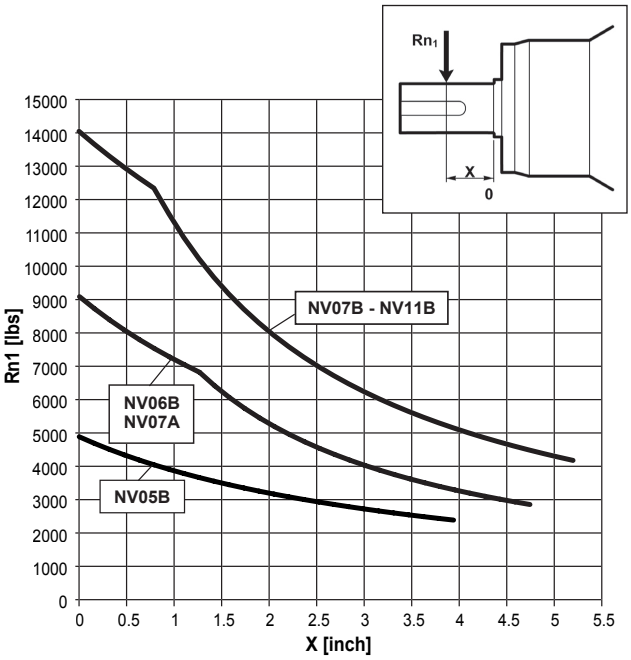

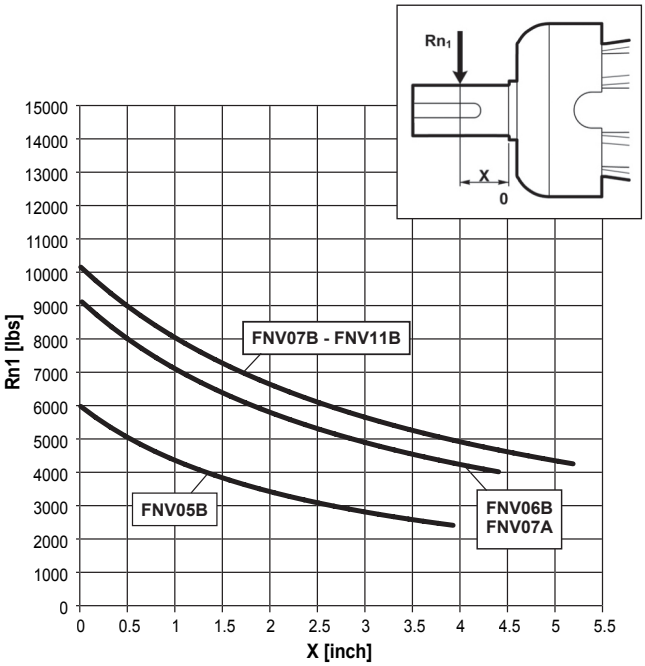

Load corrective factor fh_1 on shafts	$Fh_1 = n_1 \cdot h$	250000	500000	1000000	2000000	5000000	10000000
	fh_1	**1**	**0.79**	**0.63**	**0.50**	**0.37**	**0.29**

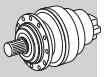

318M L

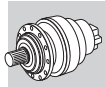

Metric

Imperial

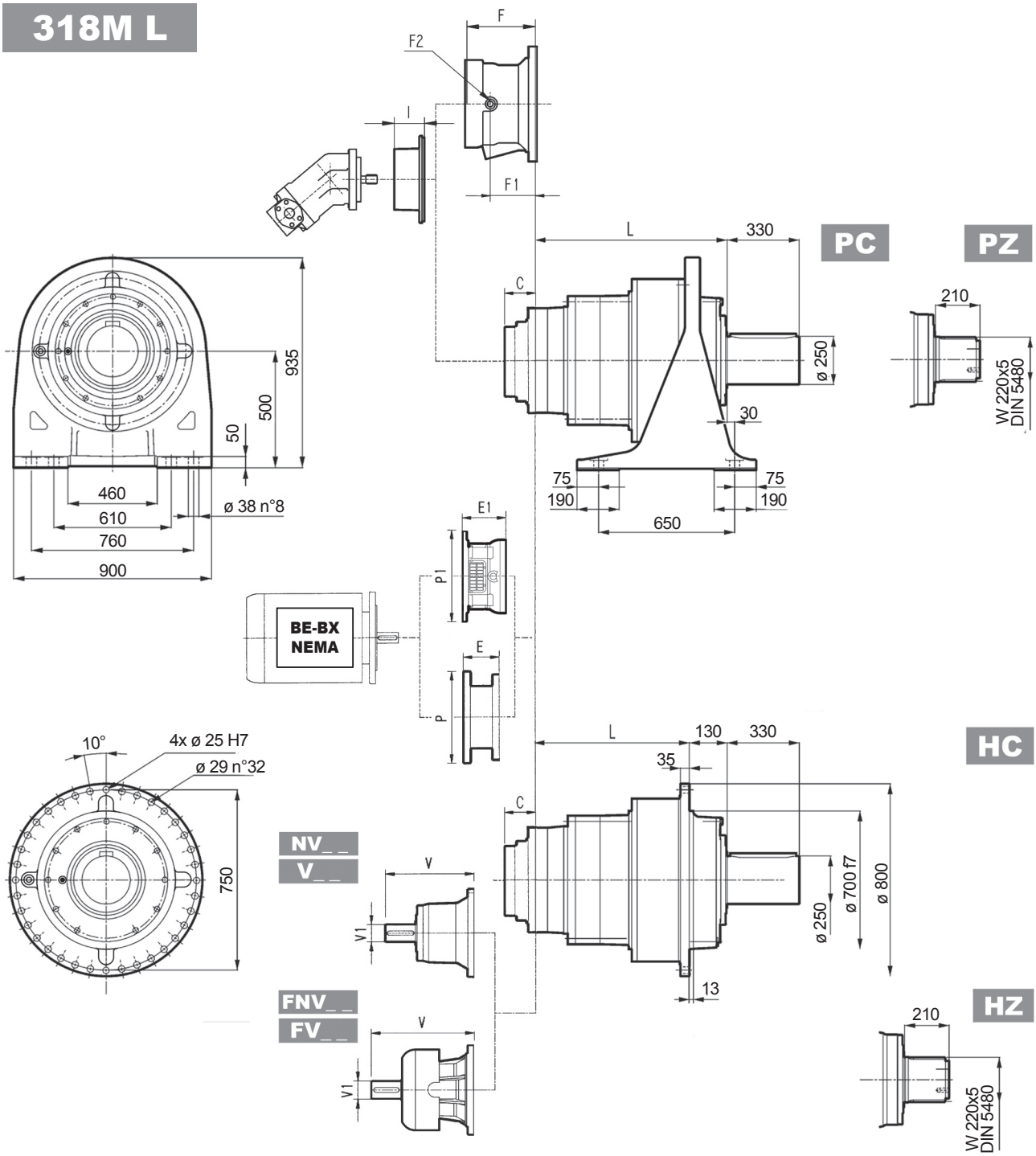

Dimensions are in mm when shown in italic, otherwise dimensions are in inches

	L				Kg							I	F	F1	F2	Type	Input	Kg
	PC - PZ	HC - HZ	FZ - FZP	FP	PC - PZ	HC - HZ	FZ - FZP	FP	C	C	Input							
318M L1	*332*	*202*	*202*	*202*	*1250*	*950*	*800*	*830*	*208*	*8.189*	*G*		—	—	—	—	—	—
318M L2	*677*	*547*	*547*	*547*	*1500*	*1200*	*1050*	*1080*	*116*	*4.567*	*E*		—	—	—	—	—	—
318M L3	*889*	*759*	*759*	*759*	*1600*	*1300*	*1150*	*1180*	*81*	*3.189*	*D*	*532*	*232*	*185*	*1/4 G*	*6*	*B*	*28*
318M L4	*1022*	*892*	*892*	*892*	*1650*	*1350*	*1200*	*1230*	*51*	*2.008*	*B*		*201*	*153*	*1/4 G*	*6*	*B*	*28*

	V_ _						FV_ _						NV_ _						FNV_ _					
	V	V1	Kg	V	V1	Kg	V	V1	Kg	V	V1	Kg	V	V1	lbs	V	V1	lbs	V	V1	lbs	V	V1	lbs
318M L1	—	—	—	—	—	—	—	—	—	—	—	—	—	—	—	—	—	—	—	—	—	—	—	—
318M L2	*556*	*120*	*125*	—	—	—	—	—	—	—	—	—	—	—	—	—	—	—	—	—	—	—	—	—
318M L3	*348*	*80*	*55*	—	—	—	*456*	*80*	*85*	—	—	—	*13.563*	*3.000*	*121.3*	—	—	—	*17.835*	*3.000*	*140.0*	—	—	—
318M L4	*315*	*80*	*35*	*313*	*60*	*28*	*375*	*80*	*48*	*363*	*60*	*34*	*13.130*	*2.375*	*29.8*	*12.283*	*3.000*	*77.2*	*15.104*	*2.375*	*38.0*	*14.646*	*3.000*	*90.0*

318M L

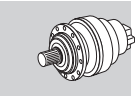

Metric

Imperial

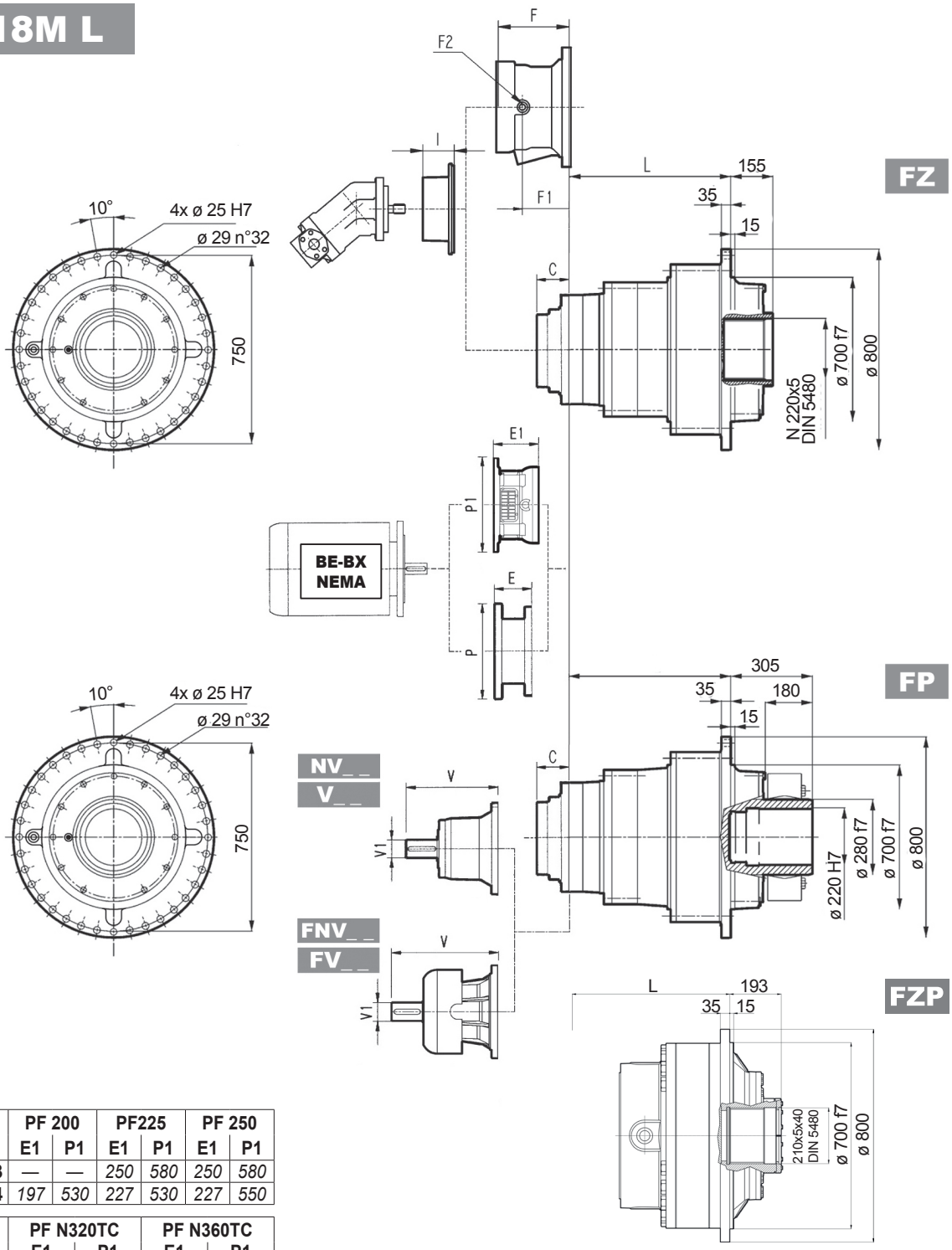

	PF 200		PF225		PF 250	
	E1	P1	E1	P1	E1	P1
318M L3	—	—	*250*	*580*	*250*	*580*
318M L4	*197*	*530*	*227*	*530*	*227*	*550*

	PF N320TC		PF N360TC	
	E1	P1	E1	P1
318M L3	—	—	*12.402*	*22.835*
318M L4	*9.921*	*20.866*	*11.496*	*20.866*

NOTE: *for R design contact Bonfiglioli Technical Service*
for PF N400TC contact Bonfiglioli Technical Service

FP | **T_{2max} = 2,849,940 lb•in**

Dimensions are in mm when shown in italic, otherwise dimensions are in inches

	P180		P200		P225		P250	
	E	P	E	P	E	P	E	P
318M L3	—	—	*267*	*400*	*297*	*450*	*297*	*550*
318M L4	*195*	*350*	*186*	*400*	*216*	*450*	*215*	*550*

	N320TC		N360TC	
	E	P	E	P
318M L3	—	—	—	—
318M L4	*8.445*	*15.748*	*8.445*	*15.748*

Bonfiglioli Riduttori

318M R

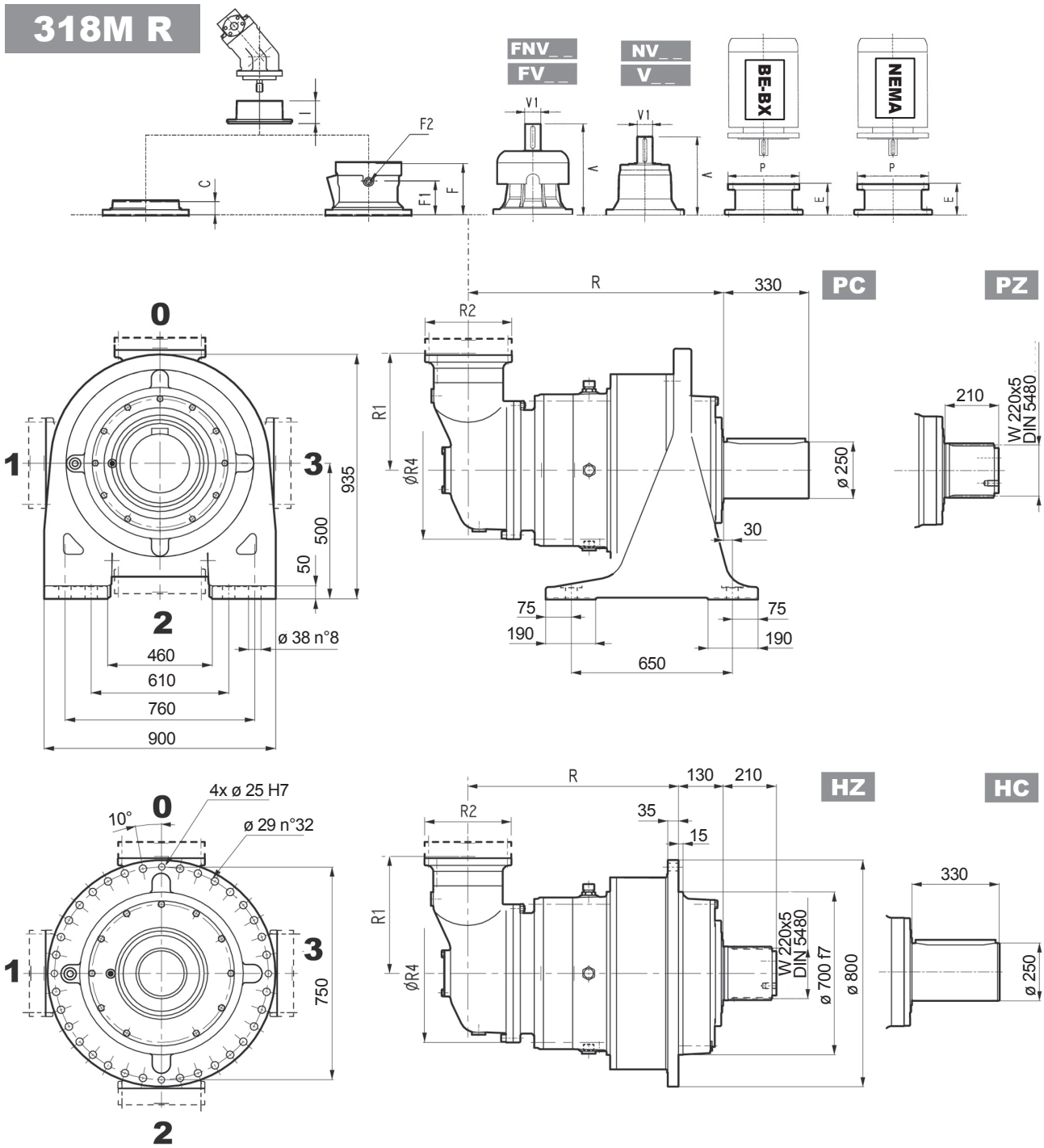

Dimensions are in mm when shown in italic, otherwise dimensions are in inches

	R				R1	R2	R4	Kg													
	PC-PZ	HC-HZ	FZ - FZP	FP				PC-PZ	HC-HZ	FZ - FZP	FP	C	C	Input	I	F	F1	F2	Type	Input	Kg
318M R4 (B)	*1115*	*985*	*985*	*985*	*345*	*292*	*400*	*1720*	*1420*	*1270*	*1300*	*45*	*1.772*	*B*	*532*	*195*	*147*	*1/4 G*	*6*	*B*	*28*
318M R4 (C)	*1115*	*985*	*985*	*985*	*390*	*292*	*480*	*1730*	*1430*	*1280*	*1310*	*45*	*1.772*	*B*		*195*	*147*	*1/4 G*	*6*	*B*	*28*

	V_ _			FV_ _			NV_ _			FNV_ _		
	V	V1	Kg	V	V1	Kg	V	V1	lbs	V	V1	lbs
318M R4 (B)	*307*	*60*	*23*	*357*	*60*	*28*	*12.703*	*2.375*	*50.7*	*14.652*	*2.375*	*58.0*
318M R4 (C)	*307*	*60*	*23*	*357*	*60*	*28*	*12.703*	*2.375*	*50.7*	*14.652*	*2.375*	*58.0*

318M R

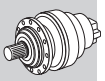

Metric

Imperial

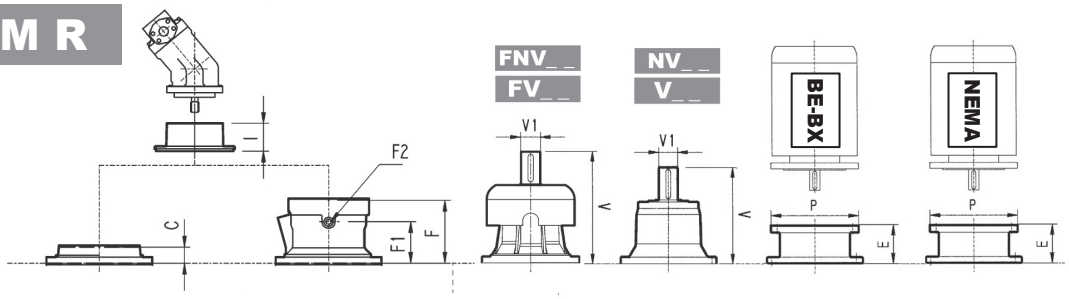

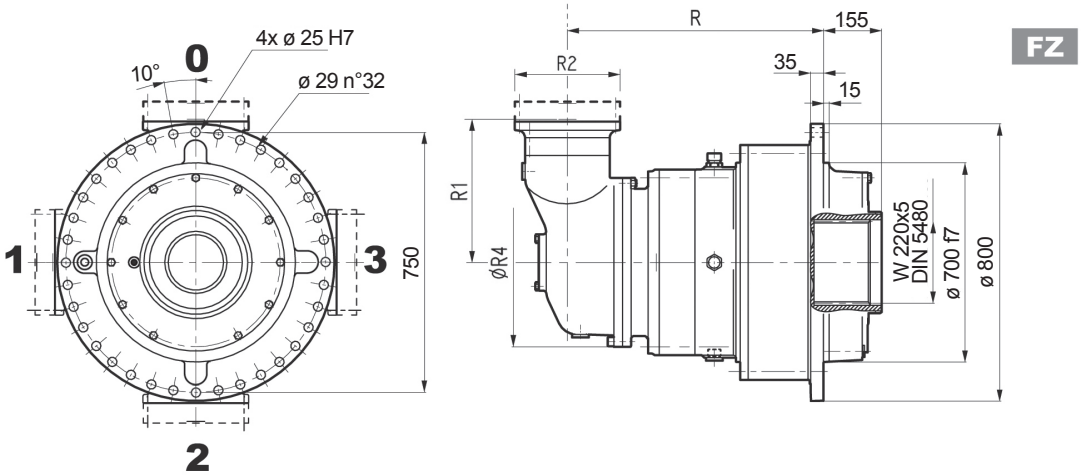

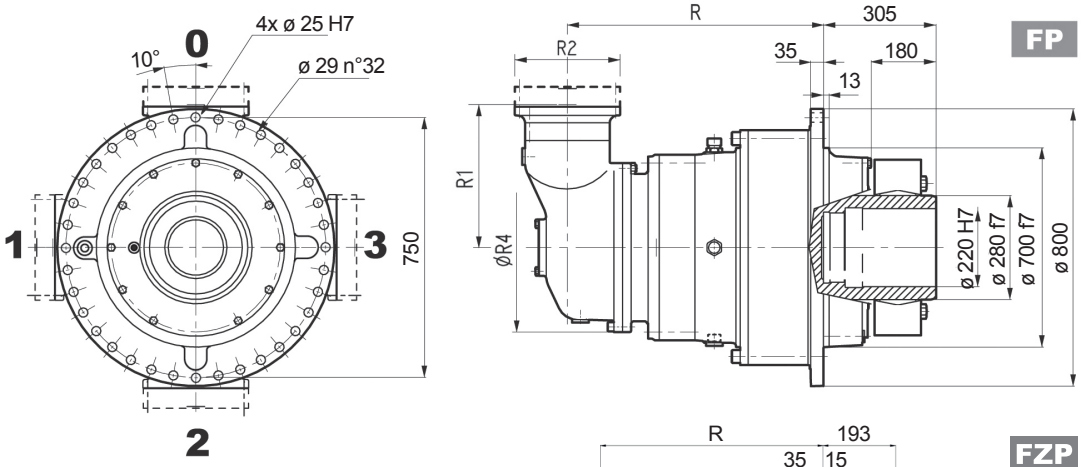

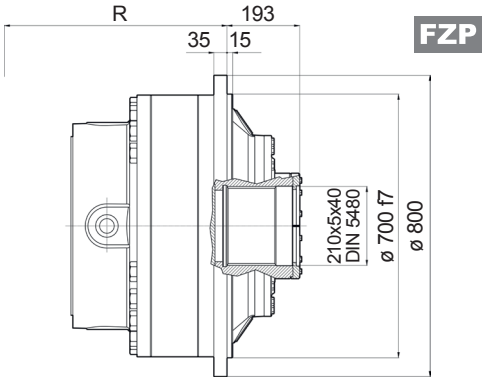

FP	T_{2max} = 2,849,940 lb•in

Dimensions are in mm when shown in italic, otherwise dimensions are in inches

	P132		P160		P180		P200		P225		P250	
	E	P	E	P	E	P	E	P	E	P	E	P
318M R4 (B)	—	—	—	—	*152*	*350*	*182*	*400*	*212*	*450*	*193*	*550*
318M R4 (C)	—	—	—	—	*152*	*350*	*182*	*400*	*212*	*450*	*193*	*550*

	N320TC		N360TC	
	E	P	E	P
318M R4 (B)	*7.776*	*13.780*	*7.776*	*13.780*
318M R4 (C)	*7.776*	*13.780*	*7.776*	*13.780*

Bonfiglioli Riduttori

3/V 18M L4

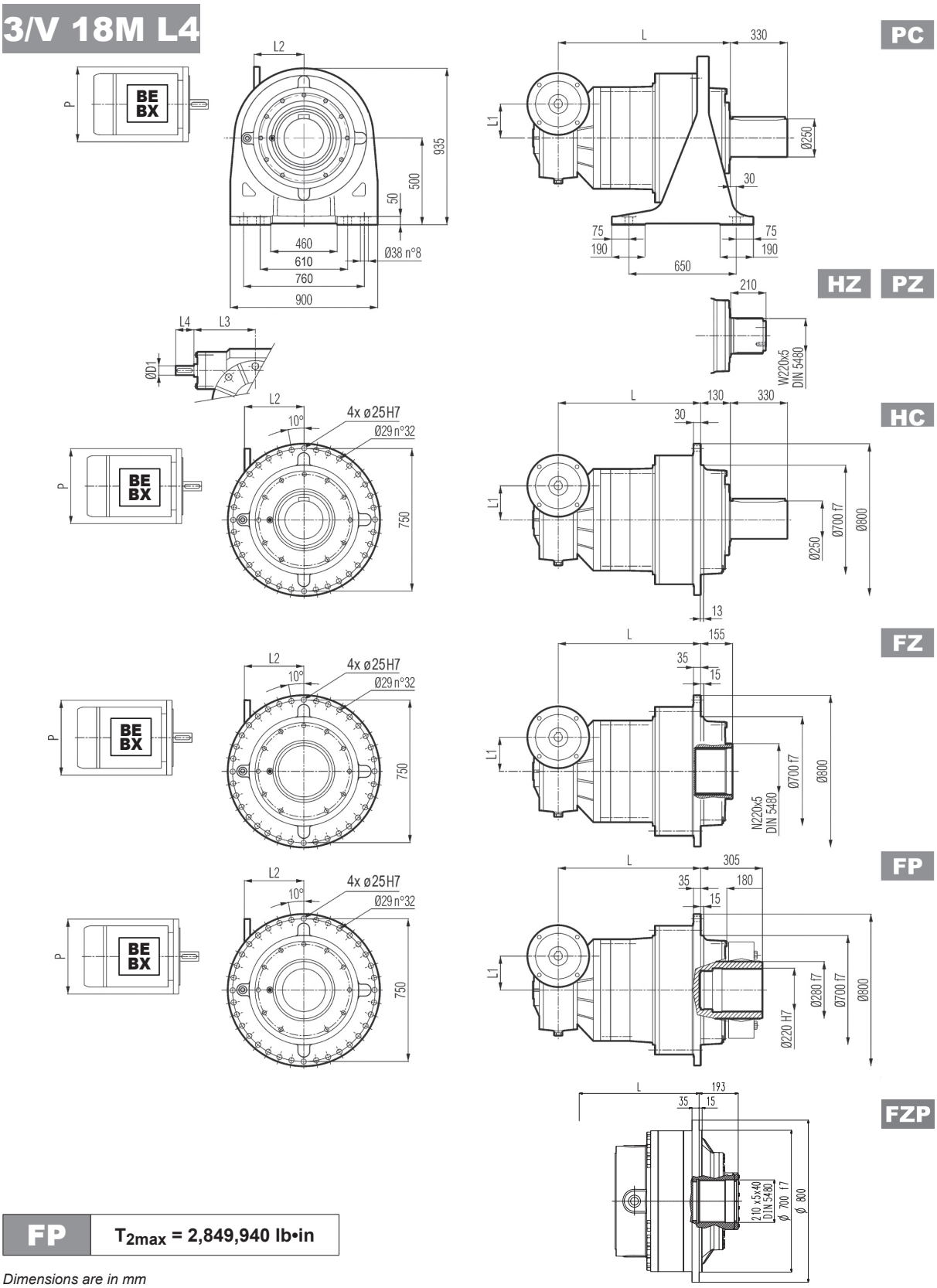

Metric

FP	T_{2max} = 2,849,940 lb•in

Dimensions are in mm

	L				L1	D1	L3	L4	Kg			
	PC - PZ	HC - HZ	FZ - FZP	FP					PC - PZ	HC - HZ	FZ - FZP	FP
3/V 18M L4	1114	984	984	984	210	48	230	110	1810	1510	1360	1390

	P132		P160		P180		P200		P225	
	L2	P	L2	P	L2	P	L2	P	L2	P
3/V 18M L4	485	300	460	350	460	350	485	400	490	450

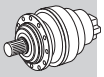

318M L | 318M R | 3/V 18M L4

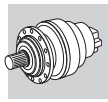

Metric

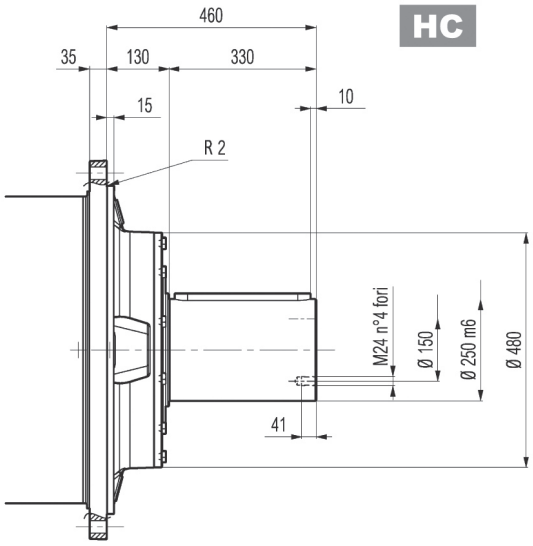

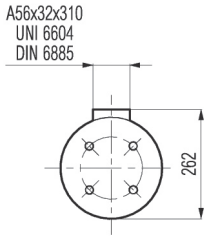

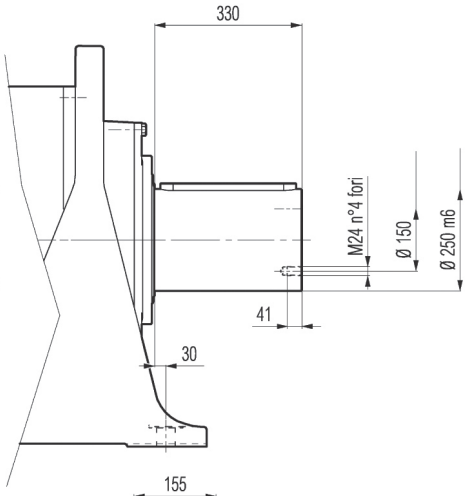

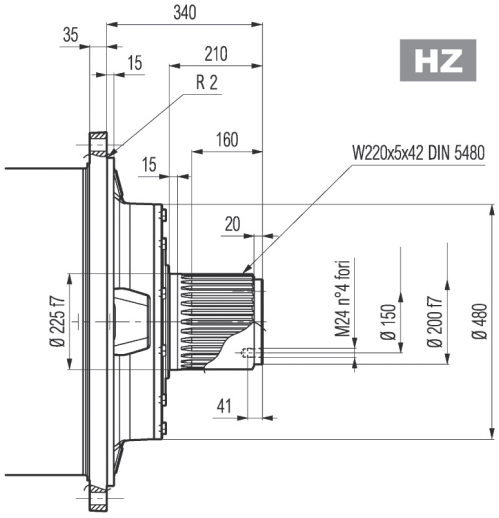

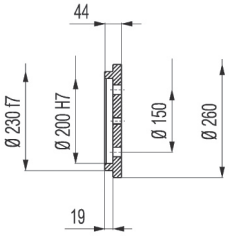

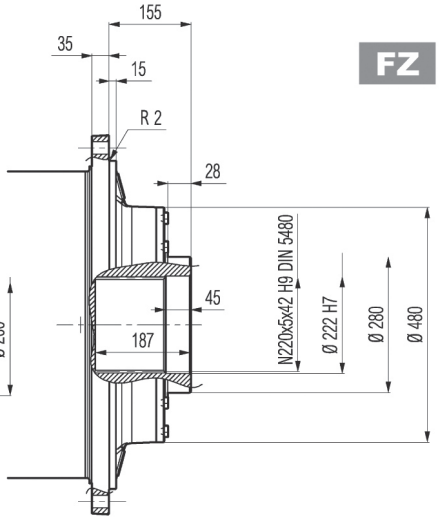

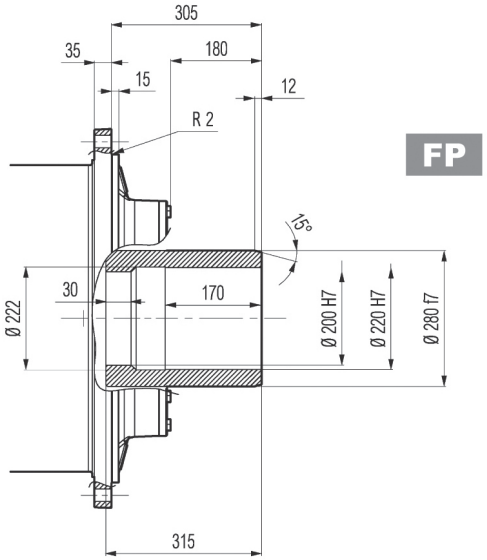

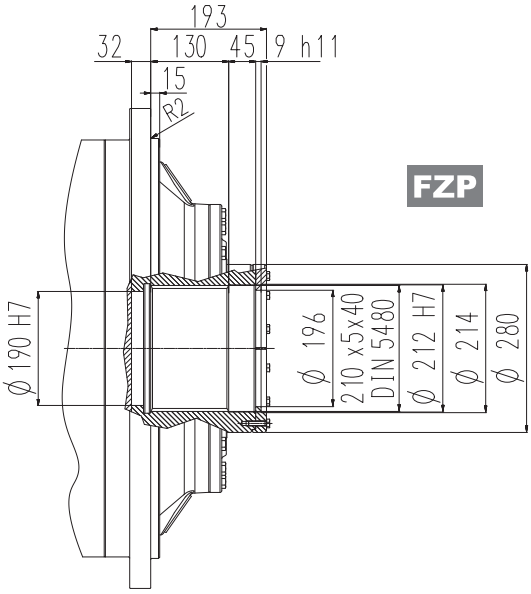

FP	T_{2max} = 2,849,940 lb•in

Dimensions are in mm

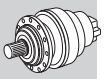

Flange

W0A

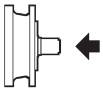

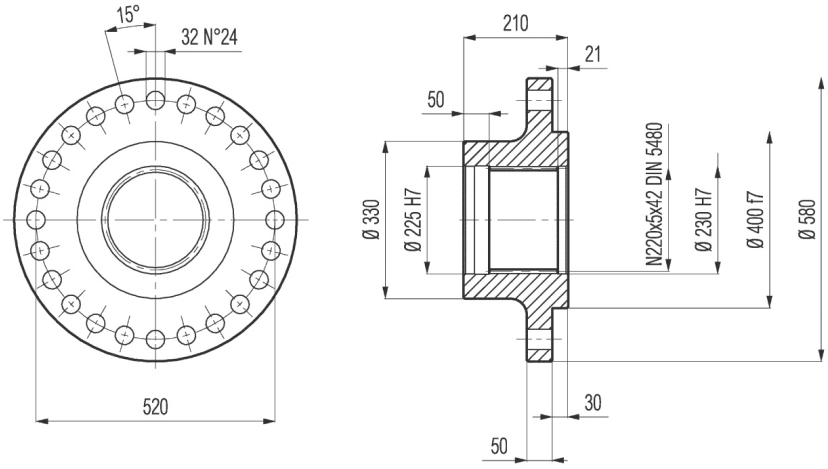

Material: Steel C40

Dimensions are in mm

Sleeve coupling

M0A

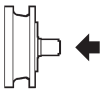

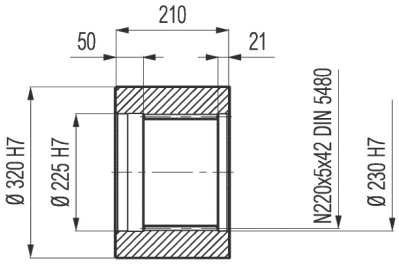

Material: Steel C40

Dimensions are in mm

Shrink disc

G0A

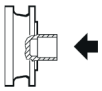

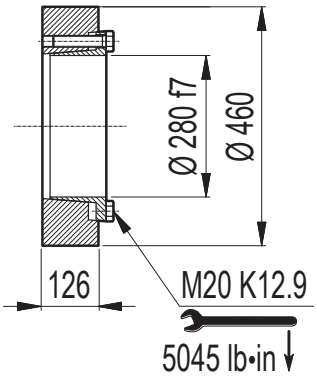

Dimensions are in mm

318M L 318M R

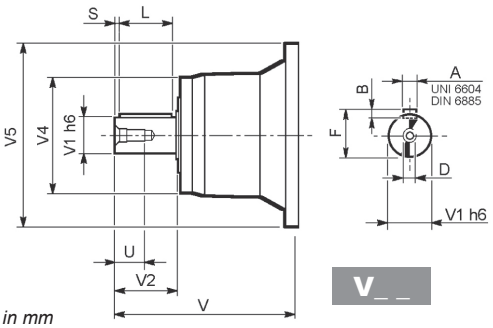

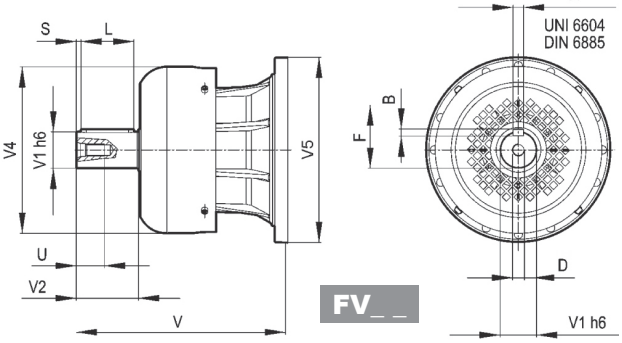

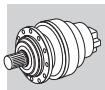

Metric

Dimensions are in mm

		V	V1	V2	V4	V5	A	B	F	L	S	D	U
318M L2	**V15B**	556	120	210	230	542	32	18	127	180	15	M24	50
318M L3	**V11B**	348	80	130	200	428	22	14	85	110	10	M16	36
	FV11B	456	80	130	347.5	428	22	14	85	110	10	M16	36
318M L4	**V07B**	315	80	130	200	345	22	14	85	110	10	M16	36
	FV07B	375	80	130	347.5	348	22	14	85	110	10	M16	36
	V07A	313	60	105	155	345	18	11	64	90	7.5	M16	36
	FV07A	363	60	105	309	348	18	11	64	90	7.5	M16	36
318M R4 (B) (C)	**V06B**	307	60	105	155	292	18	11	64	90	7.5	M16	36
	FV06B	357	60	105	309	292	18	11	64	90	7.5	M16	36

318M L 318M R

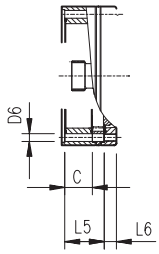

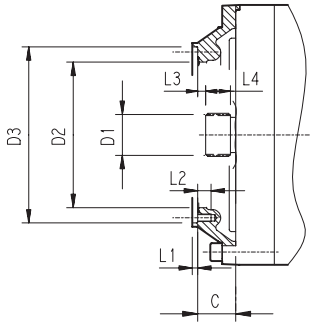

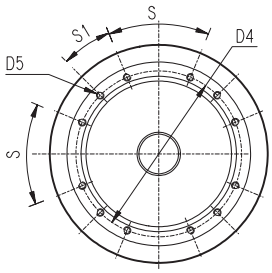

Dimensions are in mm

		C	D1	D2	D3	D4	D5	D6	L1	L2	L3	L4	L5	L6	S	S1	Input
318M L1	*Please consult Bonfiglioli Technical Service*																
318M L2	**V9AE**	116	100x94 DIN 5482	340	412 H7	390	M16 n° 18	—	7	30	8	55	—	—	20°	20°	E
318M L3 (SF)	**V9AD**	81	80x74 DIN 5482	270	335 H7	314	M16 n° 8	—	5	30	8.5	40	—	—	60°	30°	D
318M L3 (br 6”)	**V9AB**	152.5	58x53 DIN 5482	180	236 H7	222	M10 n° 12	—	4	18	12	22	—	—	45°	22.5°	B
318M L4	**V9AB**	51	58x53 DIN 5482	195	236 H7	222	M10 n° 12	—	4	18	11	22	—	—	45°	22.5°	B
318M R4 (B) (C)	**V9AB**	45	58x53 DIN 5482	195	236 H7	222	M10 n° 12	—	4	18	11	22	—	—	45°	22.5°	B

3/V 18M L4

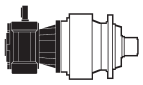

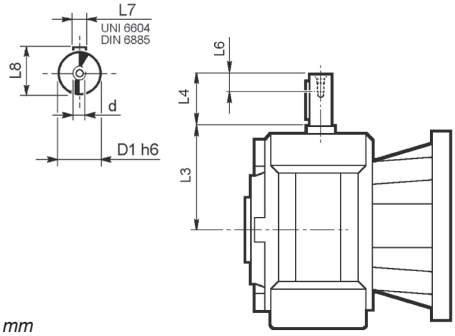

Dimensions are in mm

	D1 h6	L3	L4	L6	L7	L8	d
3/V 18M L4_HS	48	230	110	40	14	51.5	M16

318M L 318M R

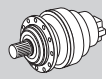

inch	Ⓣ
3.000	0 / -0.00075
2.375	0 / -0.00053
1.875	0 / -0.00053

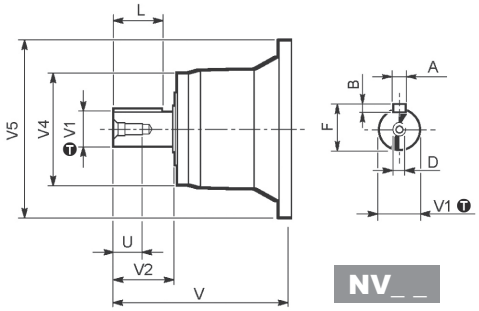

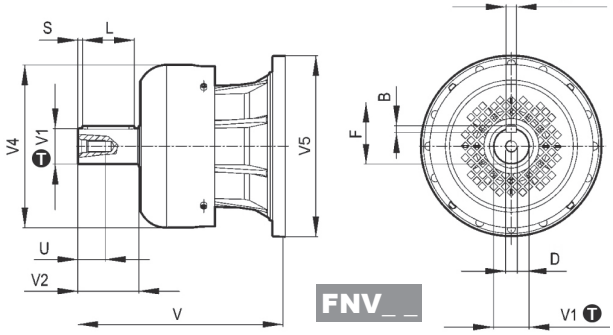

Dimensions are in Inch except when shown in italic [mm]

		V	V1	V2	V4	V5	A	B	F	L	D	U
318M L3	**NV11B**	*13.563*	*3.000*	*5.000*	*8.160*	*16.850*	*0.750*	*0.750*	*3.328*	*4.374*	*3/4-10 UNC*	*1.654*
	FNV11B	*17.835*	*3.000*	*5.000*	*13.678*	*16.850*	*0.750*	*0.750*	*3.328*	*4.374*	*3/4-10 UNC*	*1.654*
318M L4	**NV07B**	*12.283*	*3.000*	*5.000*	*7.165*	*13.699*	*0.750*	*0.750*	*3.328*	*4.374*	*3/4-10 UNC*	*1.654*
	FNV07B	*14.646*	*3.000*	*5.000*	*13.677*	*13.699*	*0.750*	*0.750*	*3.328*	*4.374*	*3/4-10 UNC*	*1.654*
	NV07A	*13.130*	*2.375*	*4.750*	*6.024*	*13.700*	*0.625*	*0.625*	*2.645*	*4.250*	*3/4-10 UNC*	*1.654*
	FNV07A	*15.104*	*2.375*	*4.750*	*6.811*	*13.700*	*0.625*	*0.625*	*2.645*	*4.250*	*3/4-10 UNC*	*1.654*
318M R4 (B) (C)	**NV06B**	*12.703*	*2.375*	*4.750*	*6.417*	*11.496*	*0.625*	*0.625*	*2.646*	*4.252*	*3/4-10 UNC*	*1.654*
	FNV06B	*14.652*	*2.375*	*4.750*	*12.165*	*11.496*	*0.625*	*0.625*	*2.646*	*4.252*	*3/4-10 UNC*	*1.654*

318M L 318M R

inch	Ⓣ
16.22	+0.00248 / 0
13.19	+0.00224 / 0
9.29	+0.00181 / 0

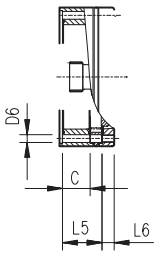

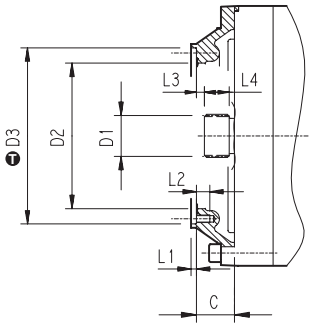

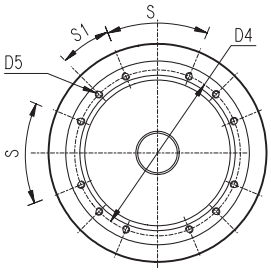

Dimensions are in Inch except when shown in italic [mm]

		C	D1	D2	D3	D4	D5	D6	L1	L2	L3	L4	L5	L6	S	S1	Input
318M L1	*Please consult Bonfiglioli Technical Service*																
318M L2	**V9AE**	*4.57*	*100x94 DIN 5482*	*13.39*	*16.22*	*15.35*	*M16 n° 18*	—	*0.28*	*1.18*	*0.31*	*2.17*	—	—	*20°*	*20°*	*E*
318M L3 (SF)	**V9AD**	*3.19*	*80x74 DIN 5482*	*10.63*	*13.19*	*12.36*	*M16 n° 8*	—	*0.20*	*1.18*	*0.33*	*1.57*	—	—	*60°*	*30°*	*D*
318M L3 (br 6”)	**V9AB**	*6.00*	*58x53 DIN 5482*	*7.09*	*9.29*	*8.74*	*M10 n° 12*	—	*0.16*	*0.71*	*0.47*	*0.87*	—	—	*45°*	*22.5°*	*B*
318M L4	**V9AB**	*2.01*	*58x53 DIN 5482*	*7.68*	*9.29*	*8.74*	*M10 n° 12*	—	*0.16*	*0.71*	*0.43*	*0.87*	—	—	*45°*	*22.5°*	*B*
318M R4 (B) (C)	**V9AB**	*1.77*	*58x53 DIN 5482*	*7.68*	*9.29*	*8.74*	*M10 n° 12*	—	*0.16*	*0.71*	*0.43*	*0.87*	—	—	*45°*	*22.5°*	*B*

Permissible radial and axial loads on output shaft with $Fh_2 : n_2 \cdot h = 100000$

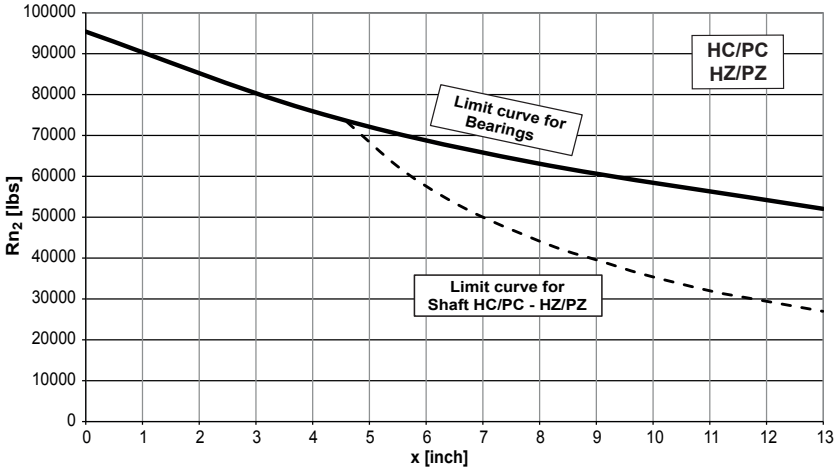

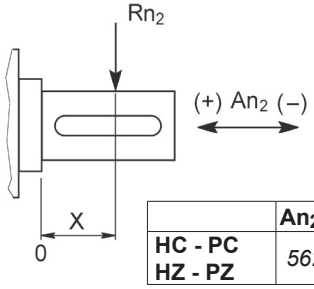

	An2 (+)	An2 (-)
HC - PC HZ - PZ	56200	50580

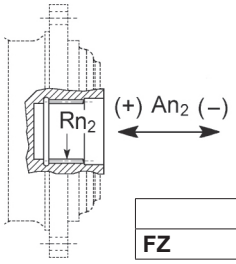

	Rn2	An2 (+/-)
FZ	20869	20869

Load corrective factor fh_2 on shafts	$Fh_2 = n_2 \cdot h$		*10000*	*25000*	*50000*	*100000*	*500000*	*1000000*
	fh_2	FZ	**2.15**	**1.59**	**1.26**	**1.00**	**0.58**	**0.46**
		HC - PC	**1.96**	**1.52**	**1.23**	**1.00**	**0.62**	**0.50**
		HZ - PZ	**1.15**	**1.00**	**1.00**	**1.00**	**0.62**	**0.50**

Permissible radial loads on input shaft with $Fh_1 : n_1 \cdot h = 250000$

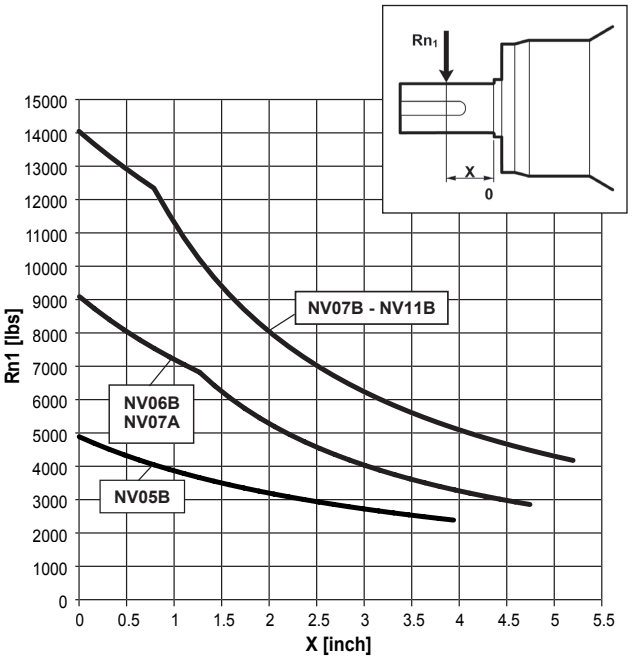

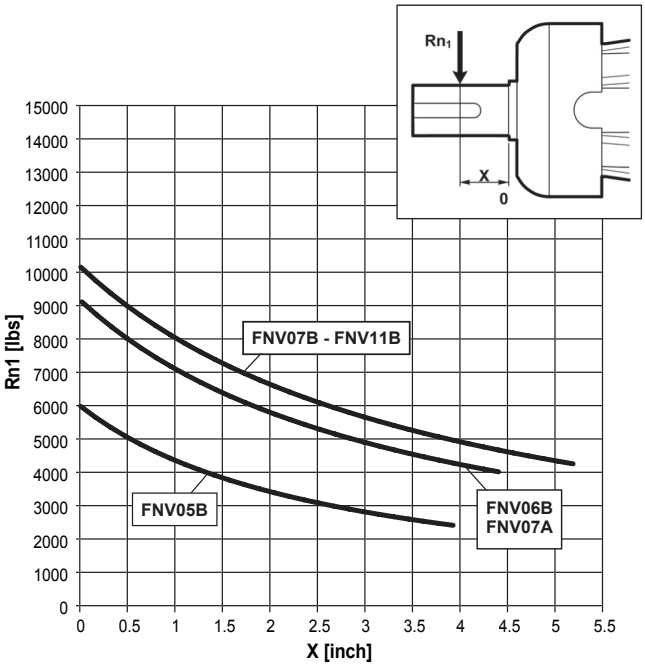

Load corrective factor fh_1 on shafts	$Fh_1 = n_1 \cdot h$	*250000*	*500000*	*1000000*	*2000000*	*5000000*	*10000000*
	fh_1	**1**	**0.79**	**0.63**	**0.50**	**0.37**	**0.29**

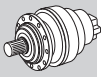

319 L

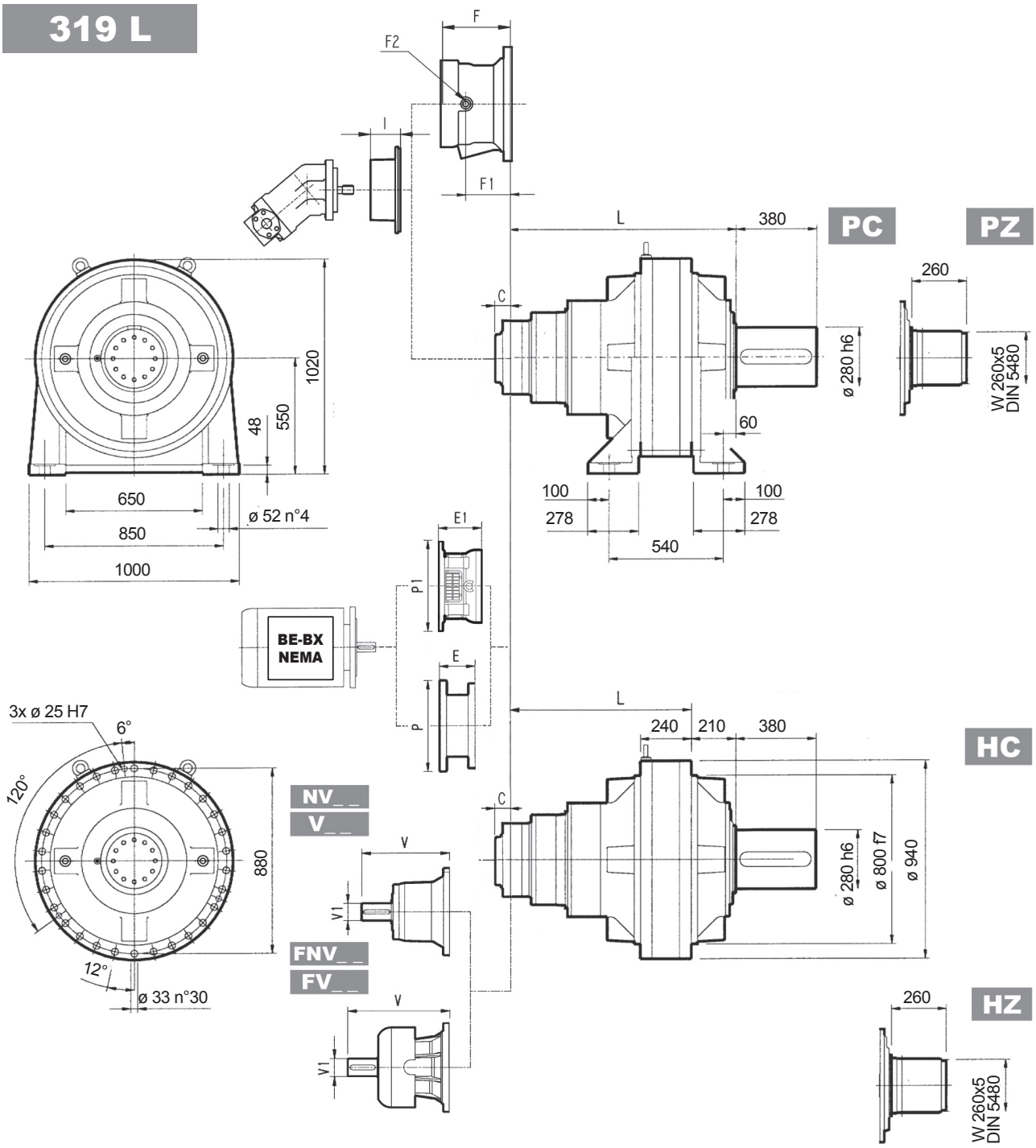

Metric

Imperial

Dimensions are in mm when shown in italic, otherwise dimensions are in inches

	L				Kg							I						Kg
	PC-PZ	HC-HZ	FZ-FZP	FP	PC-PZ	HC-HZ	FZ-FZP	FP	C	C	Input		F	F1	F2	Type	Input	
319 L1	*395*	*185*	*185*	*185*	*2100*	*1800*	*1700*	*1700*	*245*	9.646	G		—	—	—	—	—	—
319 L2	*778÷818*	*568÷608*	*568÷608*	*568÷608*	*2350*	*2050*	*1950*	*1950*	*116*	4.567	E		—	—	—	—	—	—
319 L3	*990÷1030*	*780÷820*	*780÷820*	*780÷820*	*2435*	*2135*	*2035*	*2035*	*81*	3.189	D		*232*	*185*	1/4 G	6	B	*28*
319 L4	*1123÷1163*	*913÷953*	*913÷953*	*913÷953*	*2480*	*2180*	*2080*	*2080*	*51*	2.008	B	532	*201*	*153*	1/4 G	6	B	*28*

	V_ _						FV_ _						NV_ _						FNV_ _					
	V	V1	Kg	V	V1	Kg	V	V1	Kg	V	V1	Kg	V	V1	lbs	V	V1	lbs	V	V1	lbs	V	V1	lbs
319 L1	—	—	—	—	—	—	—	—	—	—	—	—	—	—	—	—	—	—	—	—	—	—	—	—
319 L2	*556*	*120*	*125*	—	—	—	—	—	—	—	—	—	—	—	—	—	—	—	—	—	—	—	—	—
319 L3	*348*	*80*	*55*	—	—	—	*456*	*80*	*85*	—	—	—	13.563	3.000	121.3	—	—	—	17.835	3.000	140.0	—	—	—
319 L4	*315*	*80*	*35*	*313*	*60*	*28*	*375*	*80*	*48*	*363*	*60*	*34*	13.130	2.375	29.8	12.283	3.000	77.2	15.104	2.375	38.0	14.646	3.000	90.0

319 L

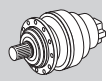

Metric

Imperial

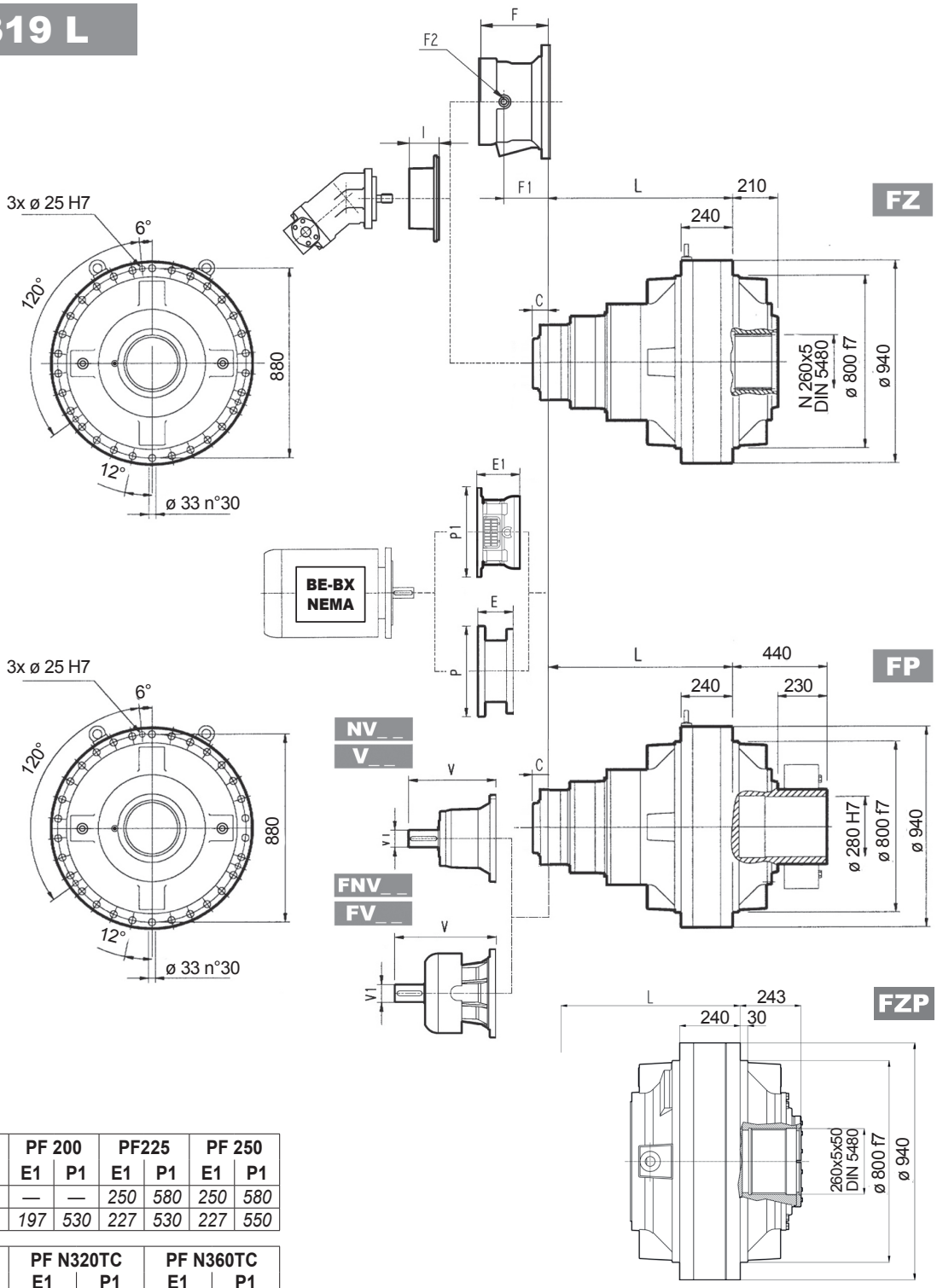

	PF 200		PF225		PF 250	
	E1	P1	E1	P1	E1	P1
319 L3	—	—	*250*	*580*	*250*	*580*
319 L4	*197*	*530*	*227*	*530*	*227*	*550*

	PF N320TC		PF N360TC	
	E1	P1	E1	P1
319 L3	—	—	12.402	22.835
319 L4	9.921	20.866	11.496	20.866

NOTE: for R design contact Bonfiglioli Technical Service
for PF N400TC contact Bonfiglioli Technical Service

FP	T_{2max} = 4,248,360 lb·in

Dimensions are in mm when shown in italic, otherwise dimensions are in inches

	P180		P200		P225		P250	
	E	P	E	P	E	P	E	P
319 L3	—	—	*267*	*400*	*297*	*450*	*297*	*550*
319 L4	*195*	*350*	*186*	*400*	*216*	*450*	*216*	*550*

	N320TC		N360TC	
	E	P	E	P
319 L3	—	—	—	—
319 L4	8.445	15.748	8.445	15.748

319 R

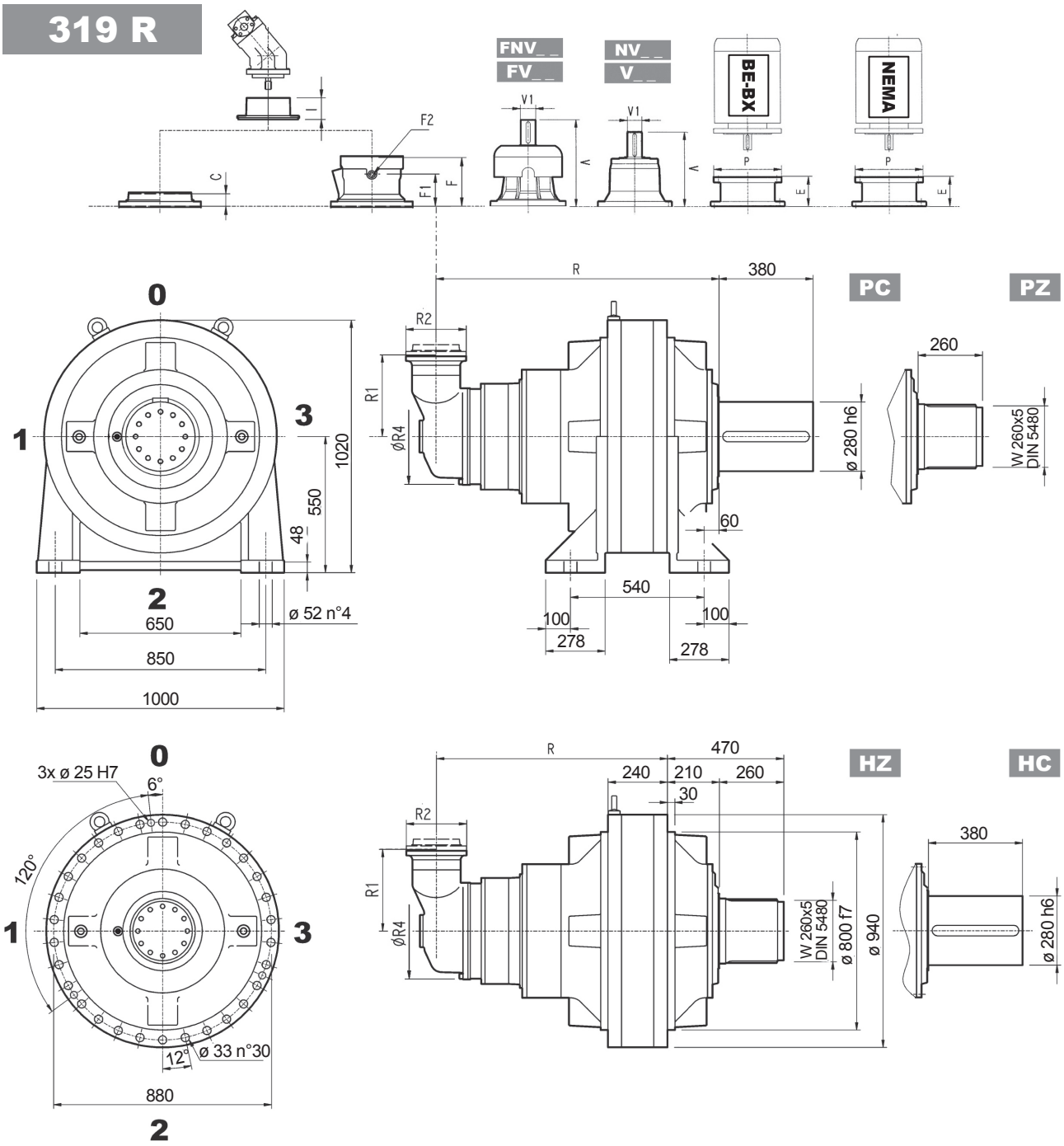

Dimensions are in mm when shown in italic, otherwise dimensions are in inches

	R				R1	R2	R4	Kg													Kg
	PC-PZ	HC-HZ	FZ - FZP	FP				PC-PZ	HC-HZ	FZ-FZP	FP	C	C	Input	I	F	F1	F2	Type	Input	
319 R4 (B)	*1215÷1255*	*1005÷1045*	*1005÷1045*	*1005÷1045*	*345*	*292*	*400*	*2560*	*2260*	*2160*	*2160*	*45*	1.772	B		*195*	*147*	1/4 G	6	B	*28*
319 R4 (C)	*1215÷1255*	*1005÷1045*	*1005÷1045*	*1005÷1045*	*390*	*292*	*480*	*2580*	*2280*	*2180*	*2180*	*45*	1.772	B	532	*195*	*147*	1/4 G	6	B	*28*

	V_ _			FV_ _			NV_ _			FNV_ _		
	V	V1	Kg	V	V1	Kg	V	V1	lbs	V	V1	lbs
319 R4 (B)	*307*	*60*	*23*	*357*	*60*	*28*	12.703	2.375	50.7	14.652	2.375	58.0
319 R4 (C)	*307*	*60*	*23*	*357*	*60*	*28*	12.703	2.375	50.7	14.652	2.375	58.0

319 R

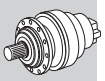

Metric

Imperial

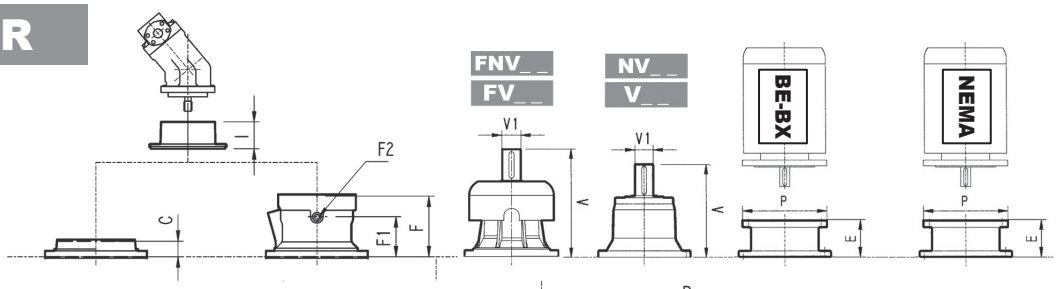

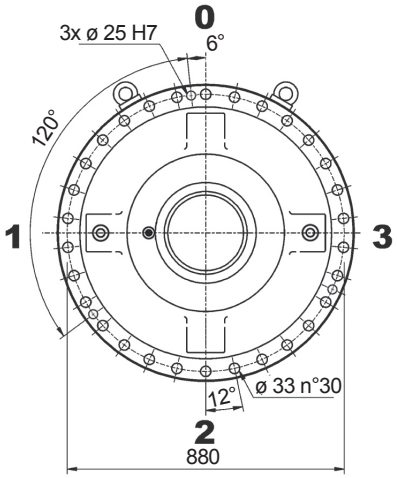

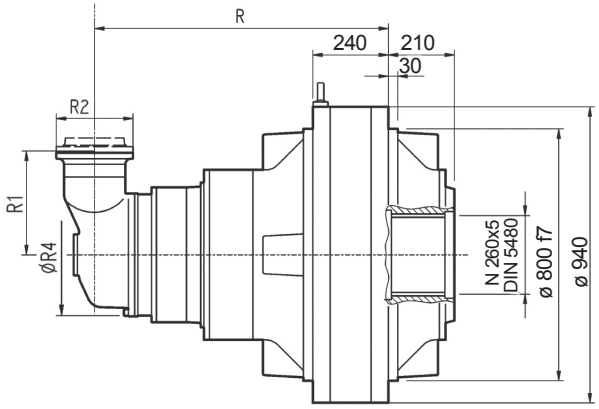

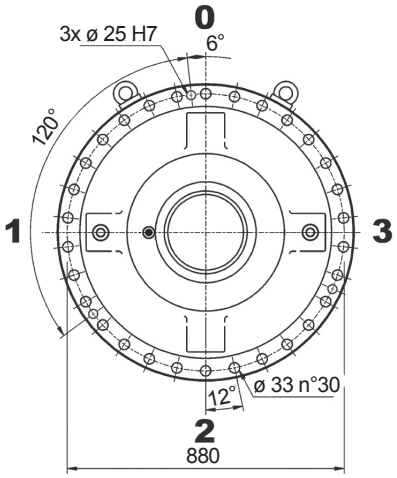

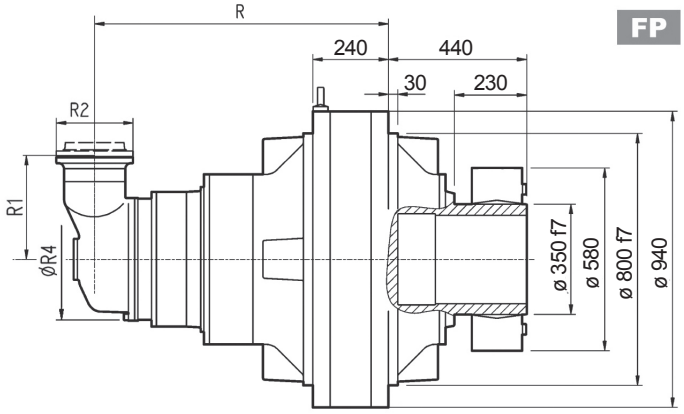

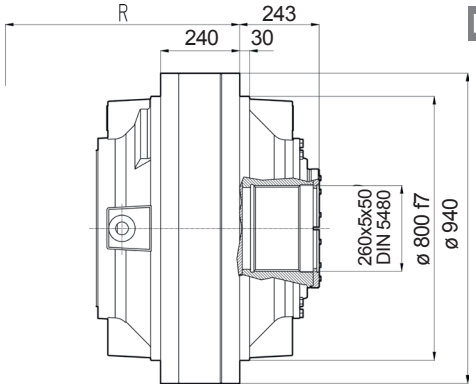

FP	T_{2max} = 4,248,360 lb·in

Dimensions are in mm when shown in italic, otherwise dimensions are in inches

	P132		P160		P180		P200		P225		P250	
	E	P	E	P	E	P	E	P	E	P	E	P
319 R4 (B)	—	—	—	—	*152*	*350*	*182*	*400*	*212*	*450*	*193*	*550*
319 R4 (C)	—	—	—	—	*152*	*350*	*182*	*400*	*212*	*450*	*193*	*550*

	N320TC		N360TC	
	E	P	E	P
319 R4 (B)	7.776	13.780	7.776	13.780
319 R4 (C)	7.776	13.780	7.776	13.780

Bonfiglioli Riduttori

3/V 19 L4

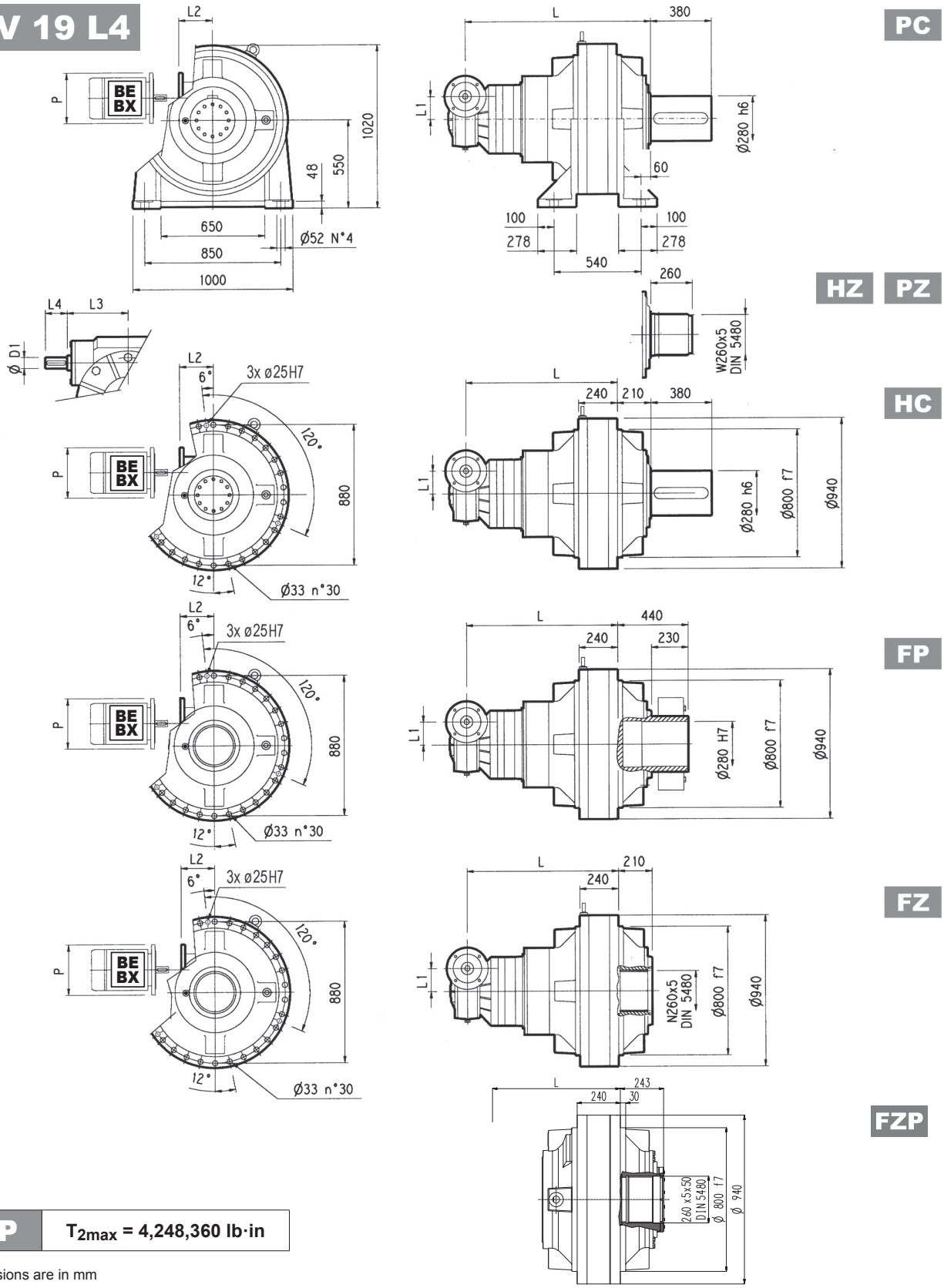

FP	T_{2max} = 4,248,360 lb·in

Dimensions are in mm

	L				L1	D1	L3	L4	Kg			
	PC-PZ	HC-HZ	FZ-FZP	FP					PC-PZ	HC-HZ	FZ-FZP	FP
3/V 19 L4	1210÷1250	1000÷1040	1000÷1040	1000÷1040	210	48	230	110	2650	2350	2250	2250

	P132		P160		P180		P200		P225	
	L2	P	L2	P	L2	P	L2	P	L2	P
3/V 19 L4	485	300	460	350	460	350	485	400	490	450

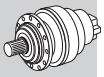

319 L | 319 R | 3/V 19 L4

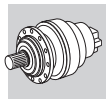

Metric

HC

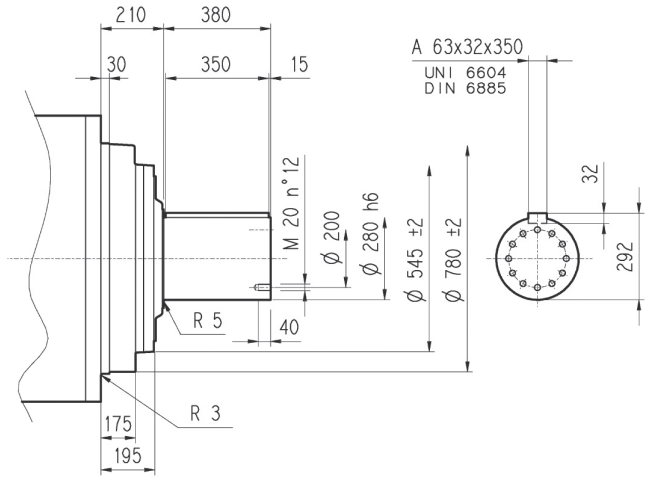

PC

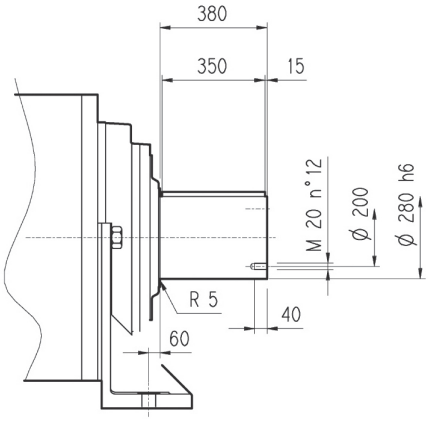

HZ

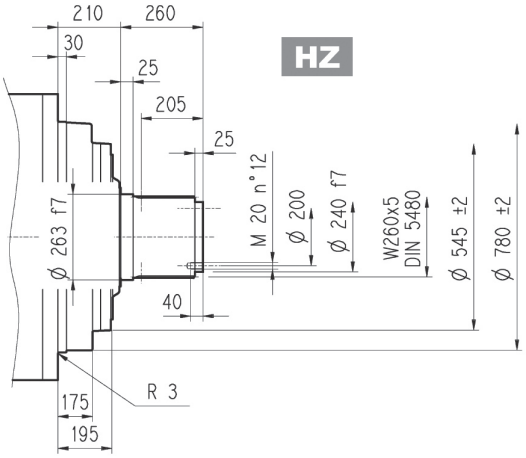

FZ

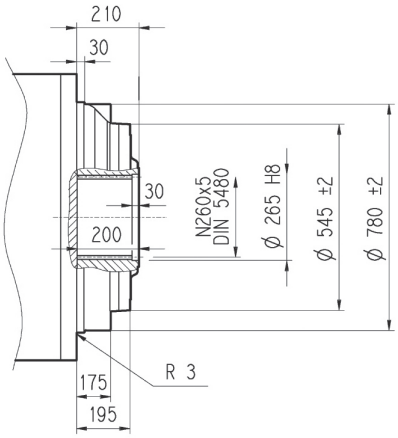

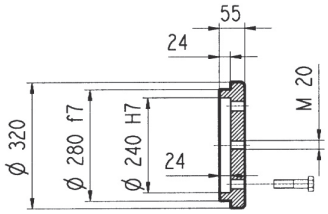

FP

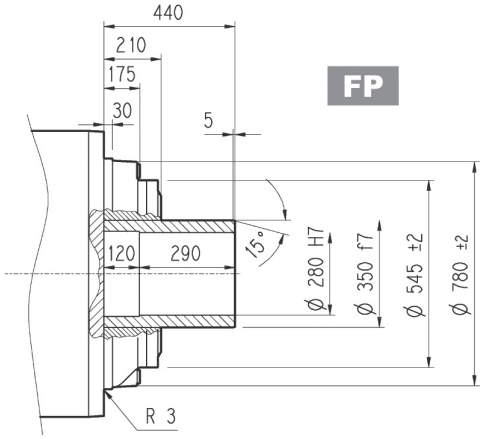

FZP

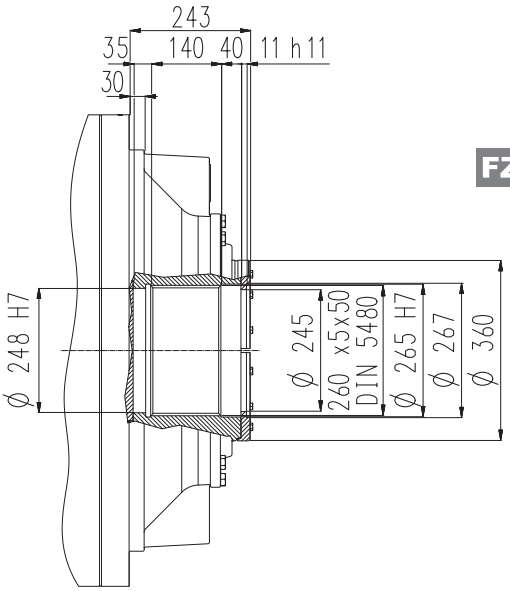

FP | **T_{2max} = 4,248,360 lb·in**

Dimensions are in mm

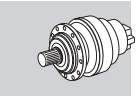

Metric

Flange

W0A

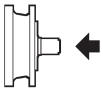

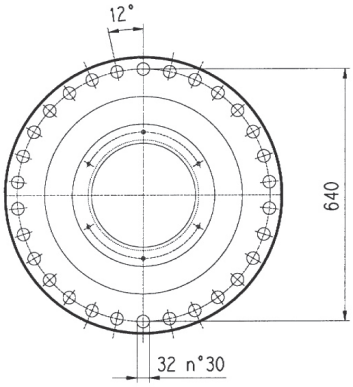

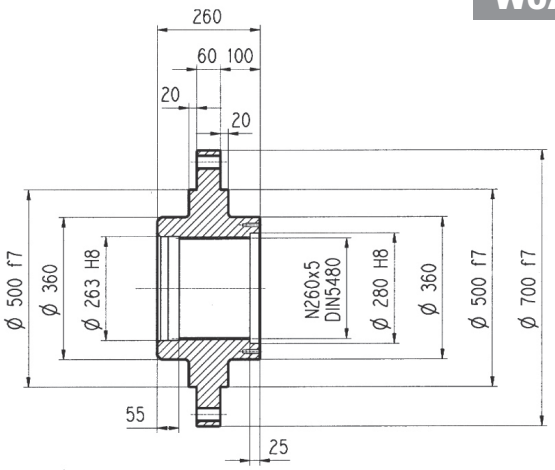

Material: Steel C40

Dimensions are in mm

Sleeve coupling

M0A

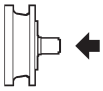

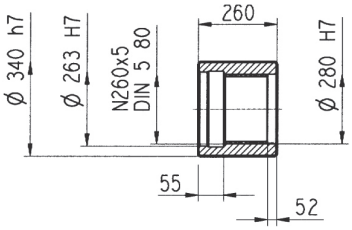

Material: Steel 16CrNi4

Dimensions are in mm

Shrink disc

G0A

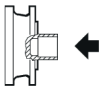

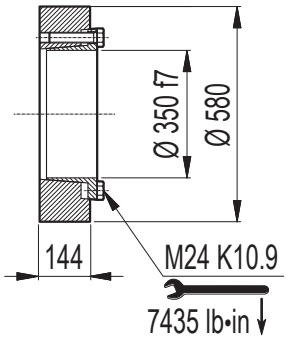

Dimensions are in mm

319 L 319 R

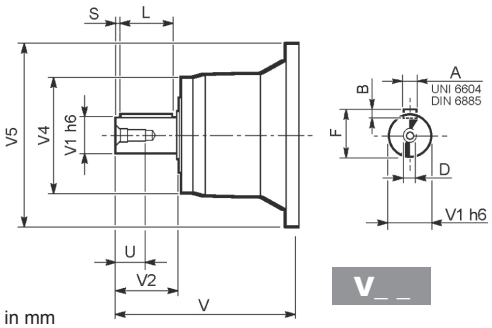

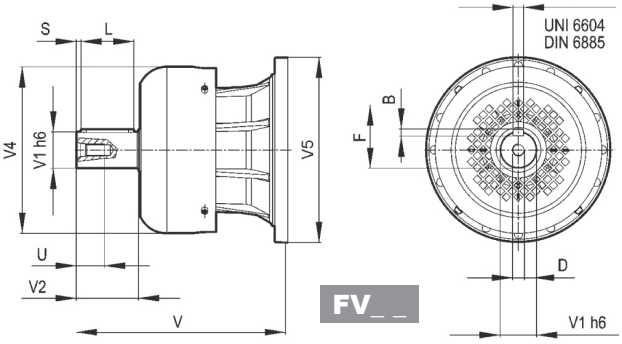

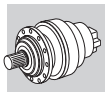

Dimensions are in mm

		V	V1	V2	V4	V5	A	B	F	L	S	D	U
319 L2	**V15B**	556	120	210	230	542	32	18	127	180	15	M24	50
319 L3	**V11B**	348	80	130	200	428	22	14	85	110	10	M16	36
	FV11B	456	80	130	347.5	428	22	14	85	110	10	M16	36
319 L4	**V07B**	315	80	130	200	345	22	14	85	110	10	M16	36
	FV07B	375	80	130	347.5	348	22	14	85	110	10	M16	36
	V07A	313	60	105	155	345	18	11	64	90	7.5	M16	36
	FV07A	363	60	105	309	348	18	11	64	90	7.5	M16	36
319 R4 (B) (C)	**V06B**	307	60	105	155	292	18	11	64	90	7.5	M16	36
	FV06B	357	60	105	309	292	18	11	64	90	7.5	M16	36

319 L 319 R

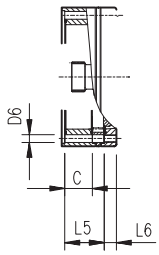

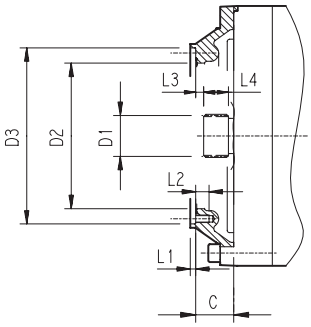

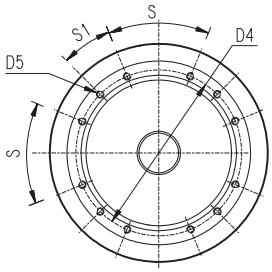

Dimensions are in mm

		C	D1	D2	D3	D4	D5	D6	L1	L2	L3	L4	L5	L6	S	S1	Input
319 L1	**V9AG**	245	150x5x28 DIN 5480	444	474 g7	503	M20 n°20	20	5	40	20	82	—	—	30°	15°	G
319 L2	**V9AE**	116÷156	100x94 DIN 5482	340	412 H7	390	M16 n°18	—	7	30	8	55	—	—	20°	20°	E
319 L3	**V9AD**	81	80x74 DIN 5482	270	335 H7	314	M16 n°8	—	5	30	8.5	40	—	—	60°	30°	D
319 L4	**V9AB**	51	58x53 DIN 5482	195	236 H7	222	M10 n°12	—	4	18	11	22	—	—	45°	22.5°	B
319 R4	**V9AA**	37	40x36 DIN 5482	140	178 H7	165	M12 n°8	11	4	18	9	18	—	—	45°	45°	A
319 R4 (B) (C)	**V9AB**	45	58x53 DIN 5482	195	236 H7	222	M10 n°12	—	4	18	11	22	—	—	45°	22.5°	B

3/V 19 L4

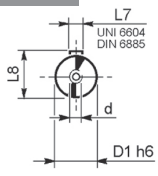

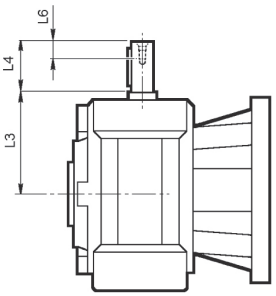

Dimensions are in mm

	D1 h6	L3	L4	L6	L7	L8	d
3/V 19 L4_HS	48	230	110	40	14	51.5	M16

319 L 319 R

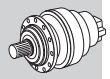

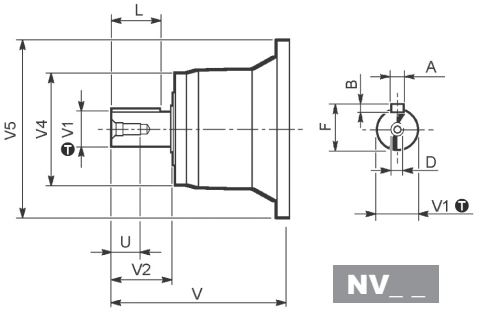

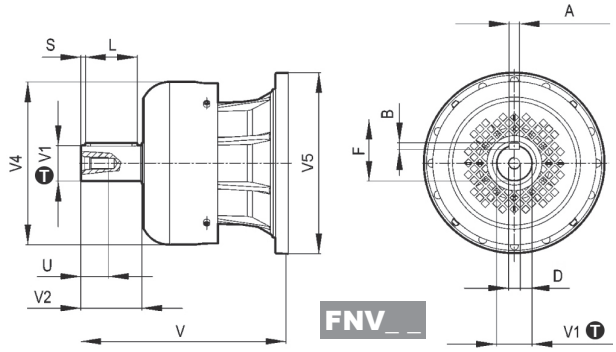

inch	T
3.000	0 -0.00075
2.375	0 -0.00053

Dimensions are in Inch except when shown in *italic [mm]*

		V	V1	V2	V4	V5	A	B	F	L	D	U
319 L3	**NV11B**	13.563	3.000	5.000	8.160	16.850	0.750	0.750	3.328	4.374	3/4-10 UNC	1.654
	FNV11B	17.835	3.000	5.000	13.678	16.850	0.750	0.750	3.328	4.374	3/4-10 UNC	1.654
319 L4	**NV07B**	12.283	3.000	5.000	7.165	13.699	0.750	0.750	3.328	4.374	3/4-10 UNC	1.654
	FNV07B	14.646	3.000	5.000	13.677	13.699	0.750	0.750	3.328	4.374	3/4-10 UNC	1.654
	NV07A	13.130	2.375	4.750	6.024	13.700	0.625	0.625	2.645	4.250	3/4-10 UNC	1.654
	FNV07A	15.104	2.375	4.750	6.811	13.700	0.625	0.625	2.645	4.250	3/4-10 UNC	1.654
319 R4 (B) (C)	**NV06B**	12.703	2.375	4.750	6.417	11.496	0.625	0.625	2.646	4.252	3/4-10 UNC	1.654
	FNV06B	14.652	2.375	4.750	12.165	11.496	0.625	0.625	2.646	4.252	3/4-10 UNC	1.654

319 L 319 R

inch	T
18.66	-0.000787 -0.00326
16.22	+0.00248 0
13.19	+0.00224 0
9.29	+0.00181 0
7.01	+0.00157 0

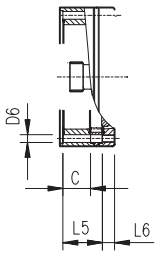

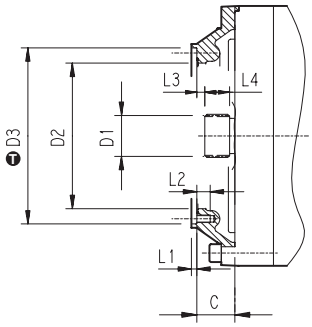

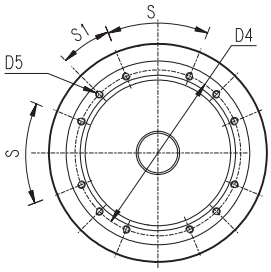

Dimensions are in Inch except when shown in *italic [mm]*

		C	D1	D2	D3	D4	D5	D6	L1	L2	L3	L4	L5	L6	S	S1	Input
319 L1	**V9AG**	9.65	*150x5x28 DIN 5480*	17.48	18.66	19.80	*M20 n°20*	0.79	0.20	1.57	0.79	3.23	—	—	30°	15°	G
319 L2	**V9AE**	4.57÷6.14	*100x94 DIN 5482*	13.39	16.22	15.35	*M16 n°18*	—	0.28	1.18	0.31	2.17	—	—	20°	20°	E
319 L3	**V9AD**	3.19	*80x74 DIN 5482*	10.63	13.19	12.36	*M16 n°8*	—	0.20	1.18	0.33	1.57	—	—	60°	30°	D
319 L4	**V9AB**	2.01	*58x53 DIN 5482*	7.68	9.29	8.74	*M10 n°12*	—	0.16	0.71	0.43	0.87	—	—	45°	22.5°	B
319 R4	**V9AA**	1.46	*40x36 DIN 5482*	5.51	7.01	6.50	*M12 n°8*	0.43	0.16	0.71	0.35	0.71	—	—	45°	45°	A
319 R4 (B) (C)	**V9AB**	1.77	*58x53 DIN 5482*	7.68	9.29	8.74	*M10 n°12*	—	0.16	0.71	0.43	0.87	—	—	45°	22.5°	B

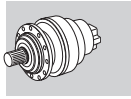

Permissible radial and axial loads on output shaft with $Fh_2 : n_2 \cdot h = 100000$

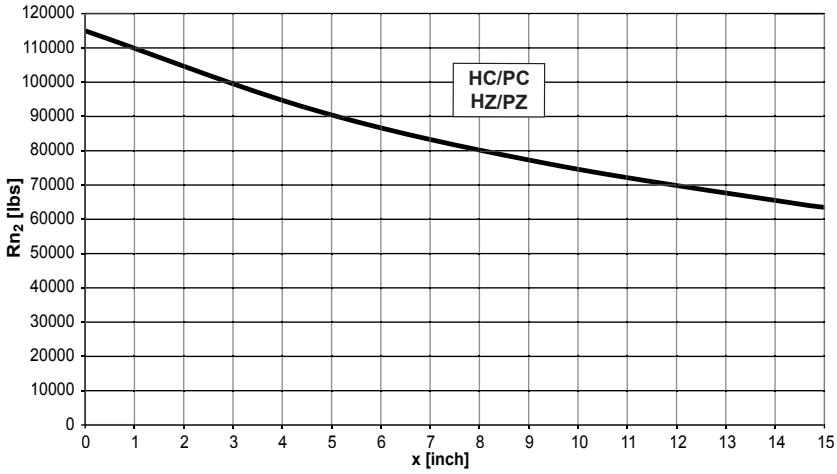

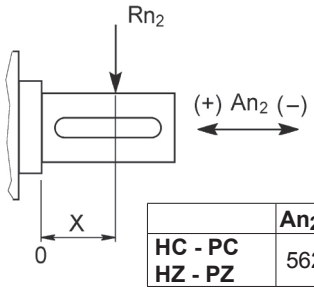

	An_2 (+)	An_2 (-)
HC - PC HZ - PZ	56200	50580

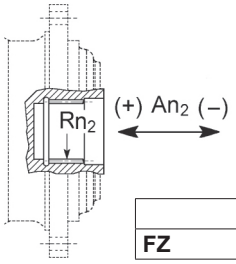

	Rn_2	An_2 (+/-)
FZ	20869	20869

Load corrective factor fh_2 on shafts	$Fh_2 = n_2 \cdot h$		10000	25000	50000	100000	500000	1000000
	fh_2	FZ	**2.15**	**1.59**	**1.26**	**1.00**	**0.58**	**0.46**
		HZ - HC - PZ - PC	**1.75**	**1.52**	**1.23**	**1.00**	**0.62**	**0.50**

Permissible radial loads on input shaft with $Fh_1 : n_1 \cdot h = 250000$

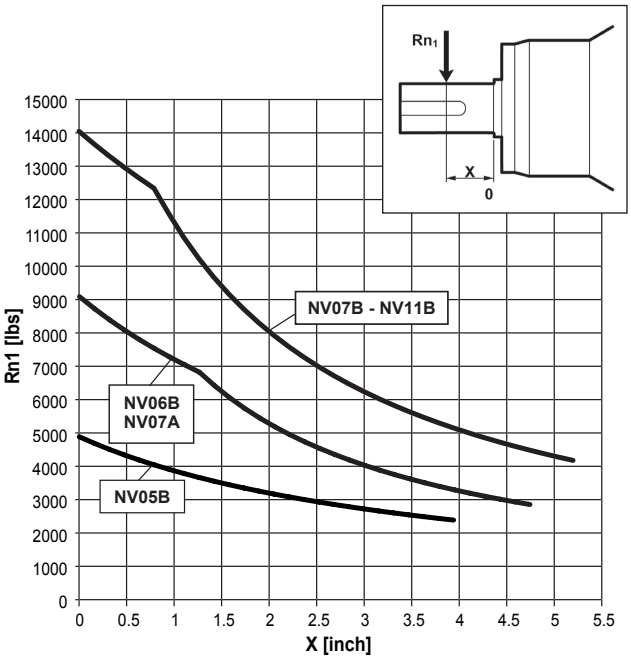

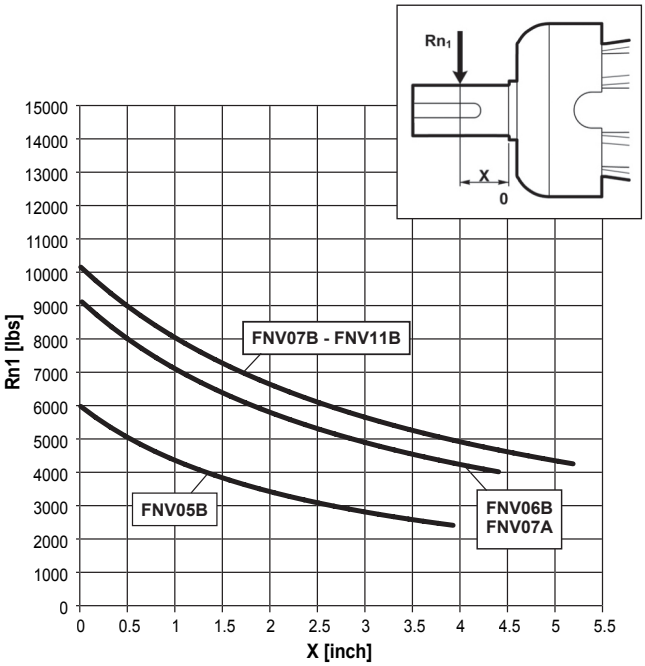

Load corrective factor fh_1 on shafts	$Fh_1 = n_1 \cdot h$	250000	500000	1000000	2000000	5000000	10000000
	fh_1	**1**	**0.79**	**0.63**	**0.50**	**0.37**	**0.29**

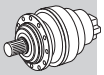

321 L

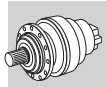

Metric

Imperial

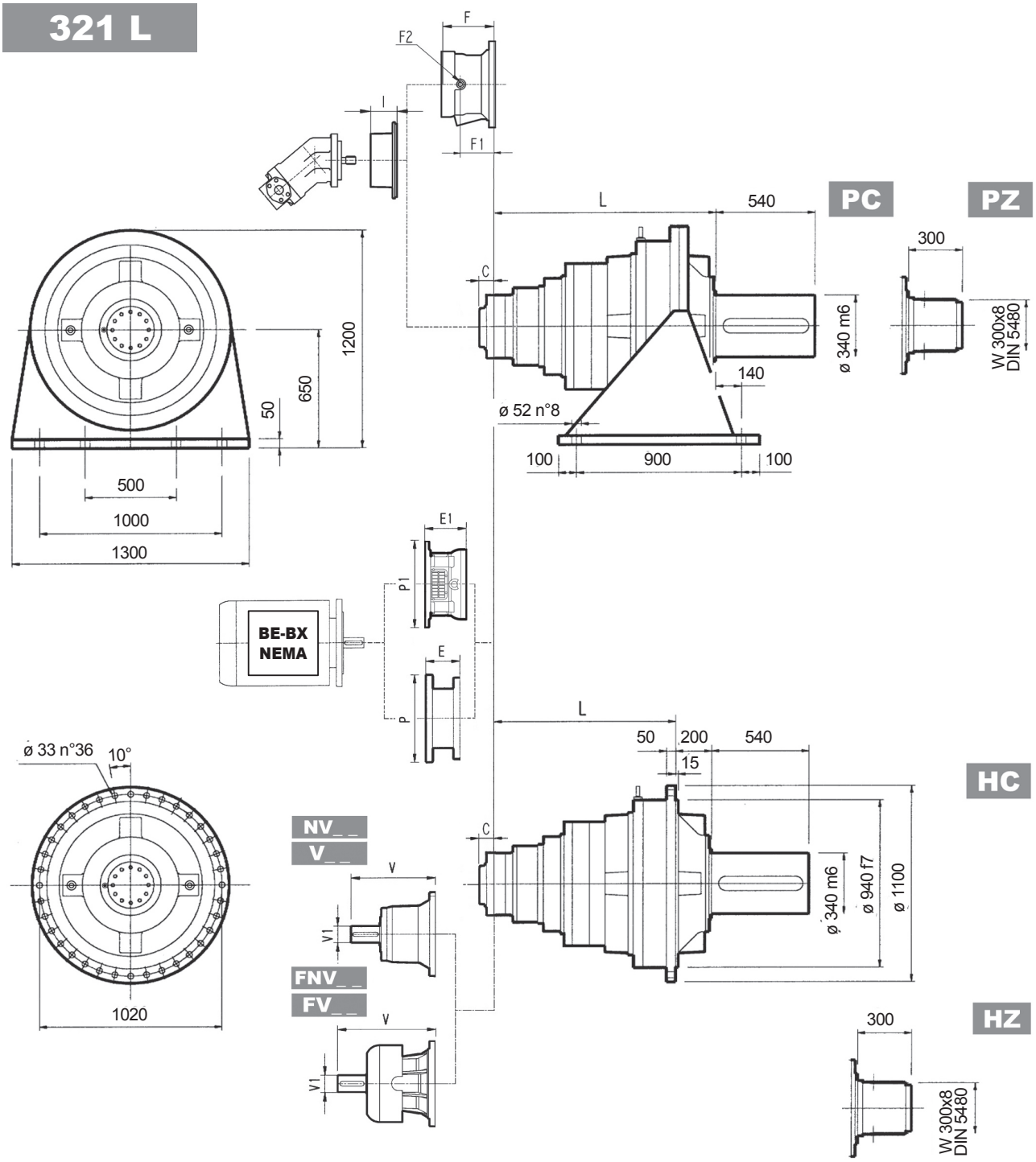

Dimensions are in mm when shown in italic, otherwise dimensions are in inches

	L				Kg													
	PC - PZ	HC - HZ	FZ - FZP	FP	PC - PZ	HC - HZ	FZ - FZP	FP	C	C	Input	I	F	F1	F2	Type	Input	Kg
321 L2	*795*	*595*	*595*	*595*	*3000*	*2700*	*2600*	*2600*	*7.126*	181	F		—	—	—	—	—	—
321 L3	*1104*	*904*	*904*	*904*	*3120*	*2820*	*2720*	*2720*	*2.953*	75	D		—	—	—	—	—	—
321 L4	*1253*	*1053*	*1053*	*1053*	*3180*	*2880*	*2780*	*2780*	*2.008*	51	B	532	*201*	*153*	1/4 G	6	B	*28*

	V_ _						FV_ _						NV_ _						FNV_ _					
	V	V1	Kg	V	V1	Kg	V	V1	Kg	V	V1	Kg	V	V1	lbs	V	V1	lbs	V	V1	lbs	V	V1	lbs
321 L2	—	—	—	—	—	—	—	—	—	—	—	—	—	—	—	—	—	—	—	—	—	—	—	—
321 L3	*343*	*80*	*55*	—	—	—	*451*	*80*	*71*	—	—	—	13.563	3.000	121.3	—	—	—	17.835	3.000	140	—	—	—
321 L4	*315*	*80*	*35*	*313*	*60*	*28*	*375*	*80*	*48*	*363*	*60*	*34*	13.130	2.375	29.8	12.283	3.000	77.2	15.104	2.375	38.0	14.646	3.000	90.0

321 L

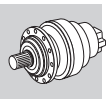

Metric

Imperial

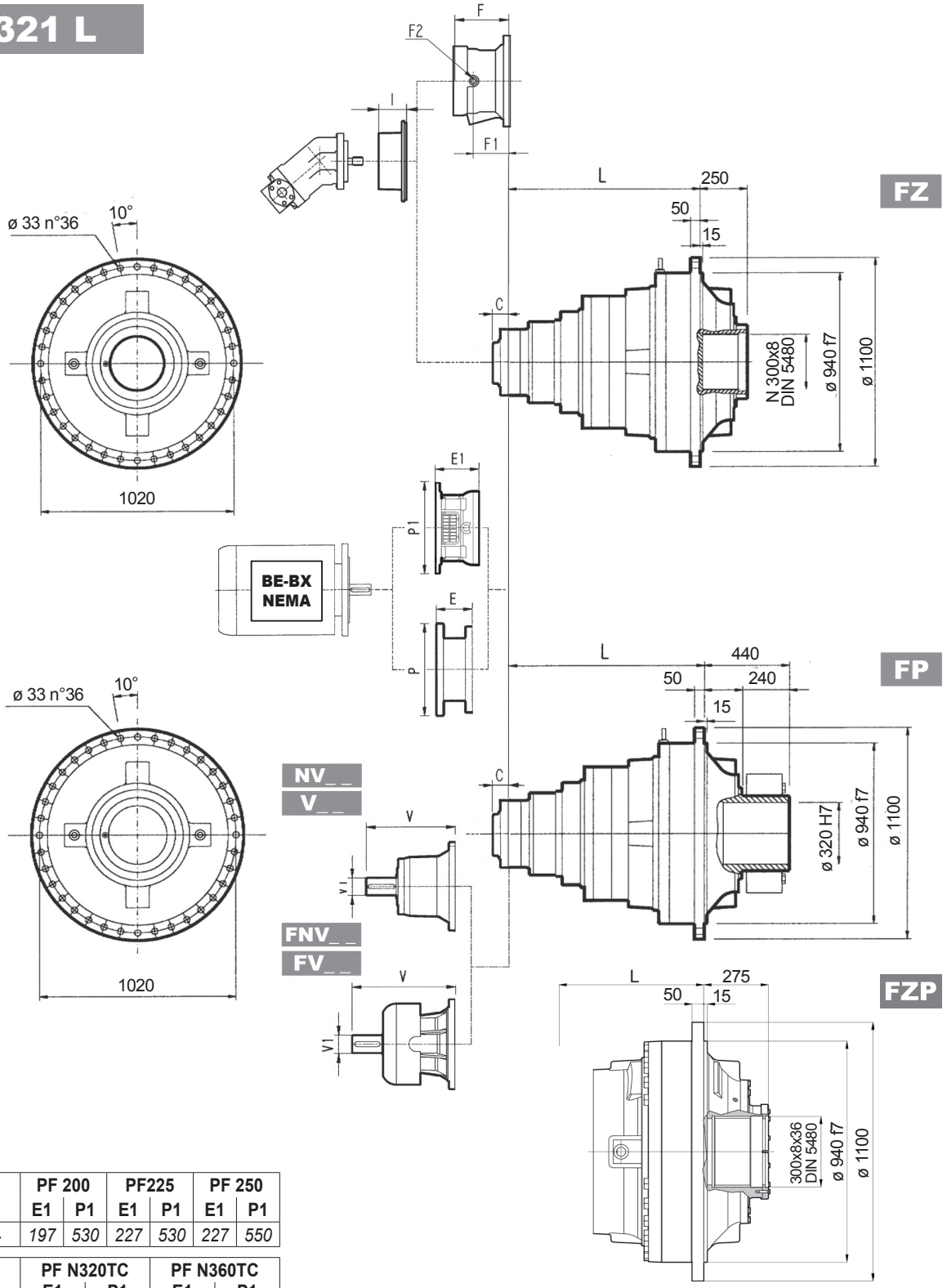

	PF 200		PF225		PF 250	
	E1	P1	E1	P1	E1	P1
321 L4	*197*	*530*	*227*	*530*	*227*	*550*

	PF N320TC		PF N360TC	
	E1	P1	E1	P1
321 L4	9.921	20.866	11.496	20.866

NOTE: for R design contact Bonfiglioli Technical Service
for PF N400TC contact Bonfiglioli Technical Service

FP | **T_{2max} = 6,372,540 lb•in**

Dimensions are in mm when shown in italic, otherwise dimensions are in inches

	P180		P200		P225		P250	
	E	P	E	P	E	P	E	P
321 L4	*195*	*350*	*186*	*400*	*216*	*450*	*216*	*550*

	N320TC		N360TC	
	E	P	E	P
321 L4	8.445	15.748	8.445	15.748

321 R

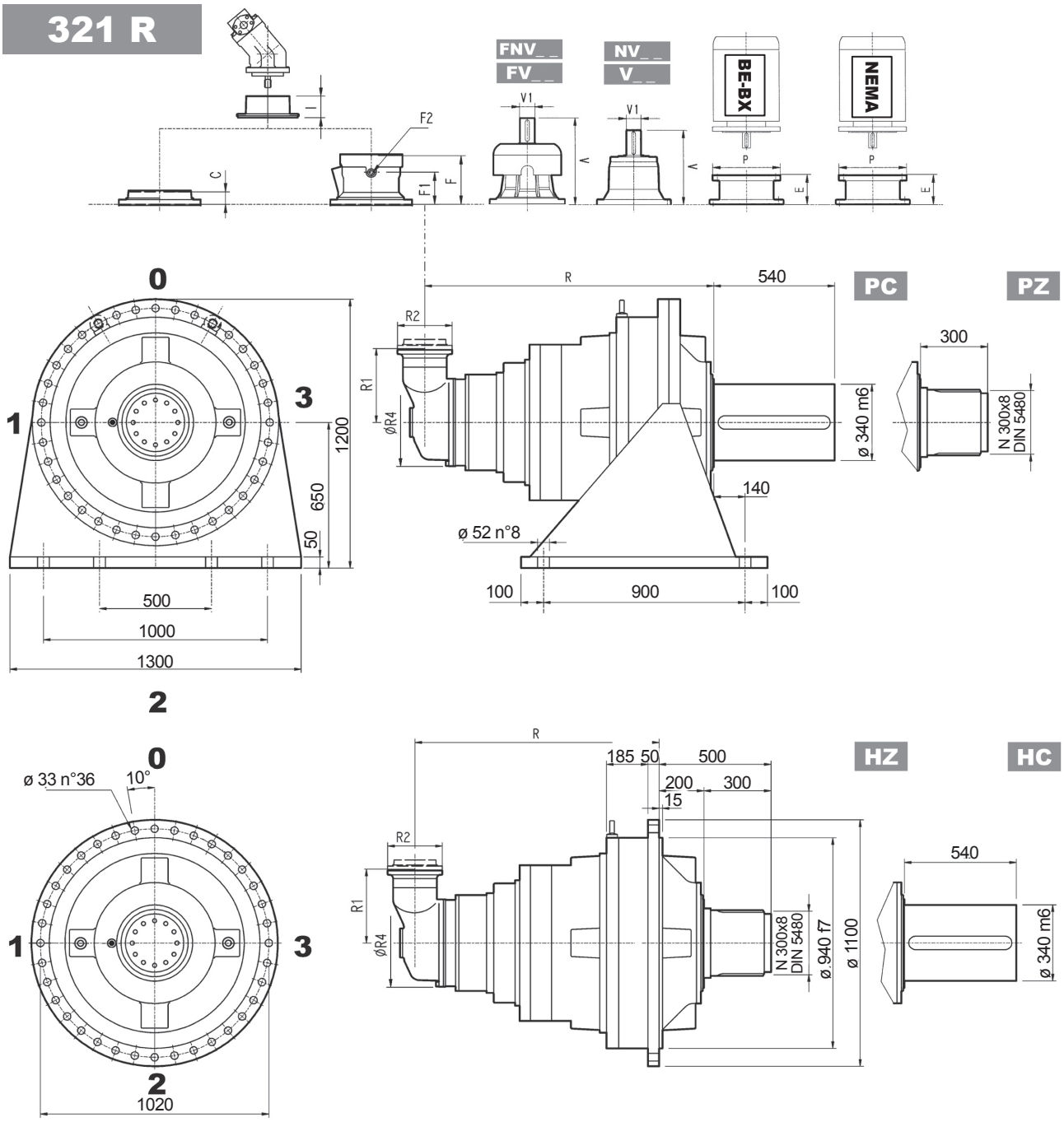

Metric

Imperial

Dimensions are in mm when shown in italic, otherwise dimensions are in inches

	R				R1	R2	R4	Kg													
	PC-PZ	HC-HZ	FZ - FZP	FP				PC-PZ	HC-HZ	FZ - FZP	FP	C	C	Input	I	F	F1	F2	Type	Input	Kg
321 R4 (B)	*1334*	*1134*	*1134*	*1134*	*345*	*292*	*400*	*3250*	*2950*	*2850*	*2850*	*45*	1.772	B		*195*	*147*	1/4 G	6	B	*28*
321 R4 (C)	*1334*	*1134*	*1134*	*1134*	*390*	*292*	*480*	*3260*	*2960*	*2860*	*2860*	*45*	1.772	B	532	*195*	*147*	1/4 G	6	B	*28*

	V_ _			FV_ _			NV_ _			FNV_ _		
	V	V1	Kg	V	V1	Kg	V	V1	lbs	V	V1	lbs
321 R4 (B)	*307*	*60*	*23*	*357*	*60*	*28*	12.703	2.375	50.7	14.652	2.375	58.0
321 R4 (C)	*307*	*60*	*23*	*357*	*60*	*28*	12.703	2.375	50.7	14.652	2.375	58.0

321 R

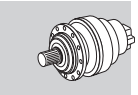

Metric

Imperial

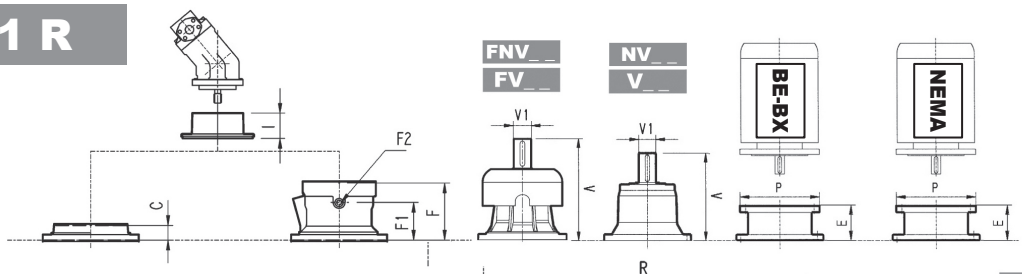

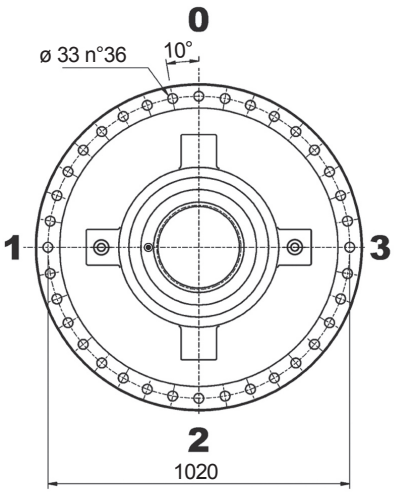

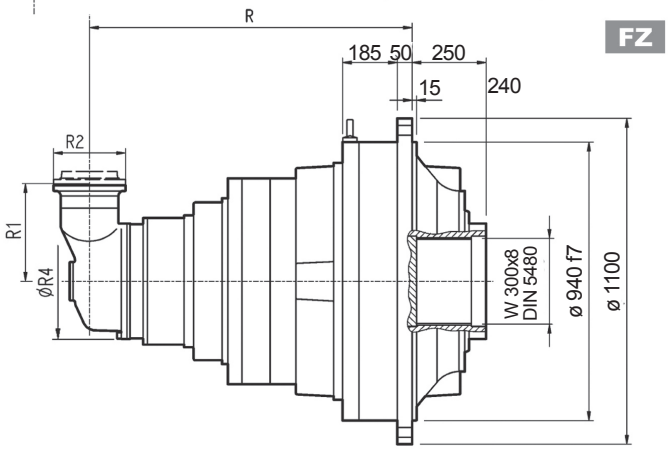

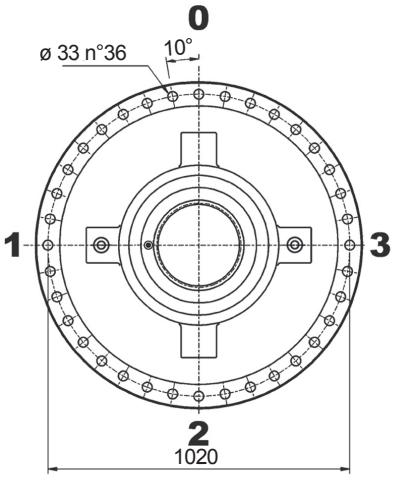

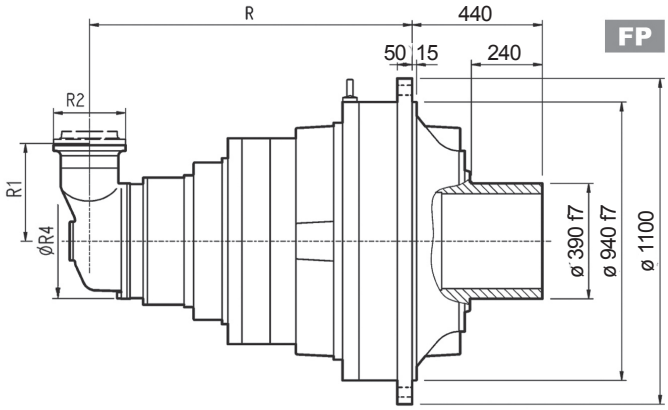

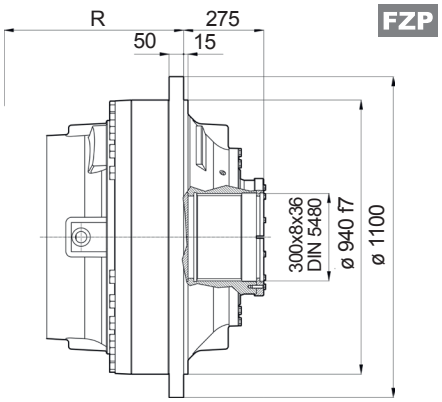

FP	T_{2max} = 6,372,540 lb•in

Dimensions are in mm when shown in italic, otherwise dimensions are in inches

	P132		P160		P180		P200		P225		P250	
	E	P	E	P	E	P	E	P	E	P	E	P
321 R4 (B)	—	—	—	—	*152*	*350*	*182*	*400*	*212*	*450*	*193*	*550*
321 R4 (C)	—	—	—	—	*152*	*350*	*182*	*400*	*212*	*450*	*193*	*550*

	N320TC		N360TC	
	E	P	E	P
321 R4 (B)	7.776	13.780	7.776	13.780
321 R4 (C)	7.776	13.780	7.776	13.780

3/V 21 L4

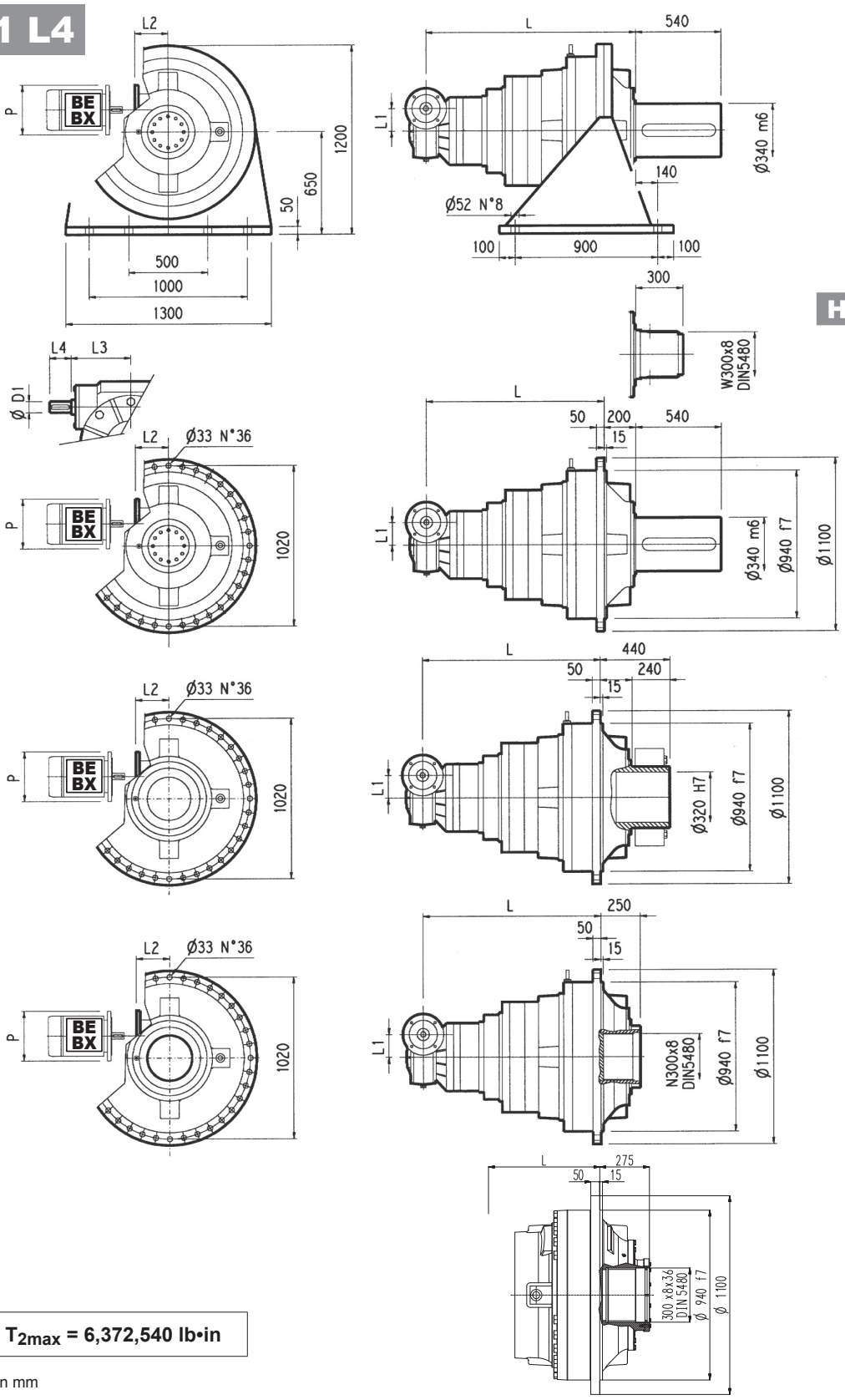

FP	T_{2max} = 6,372,540 lb•in

Dimensions are in mm

	L				L1	L2	D1	L3	L4	Kg			
	PC - PZ	HC - HZ	FZ - FZP	FP						PC - PZ	HC - HZ	FZ - FZP	FP
3/V 21 L4	1374	1174	1174	1174	250	—	55	276	110	3430	3130	3030	3030

	P132		P160		P180		P200		P225	
	L2	P	L2	P	L2	P	L2	P	L2	P
3/V 21 L4	531	300	506	350	506	350	531	400	536	450

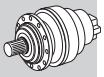

321 L | 321 R | 3/V 21 L4

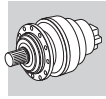

Metric

HC

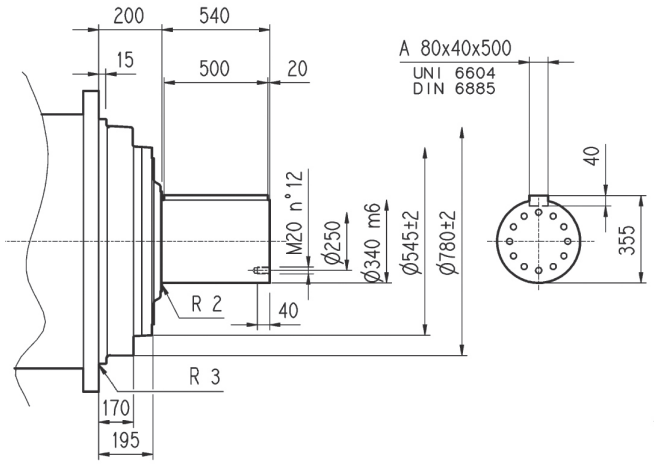

PC

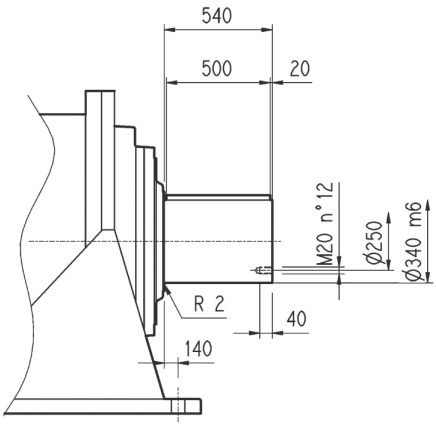

HZ

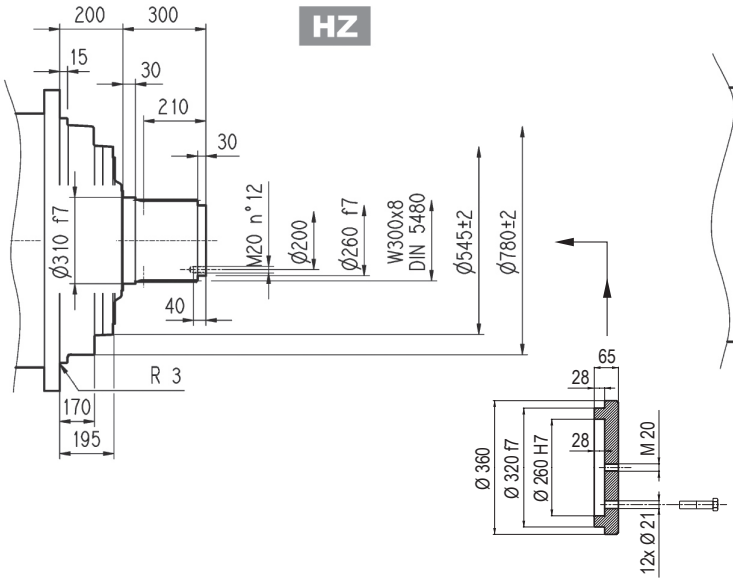

FZ

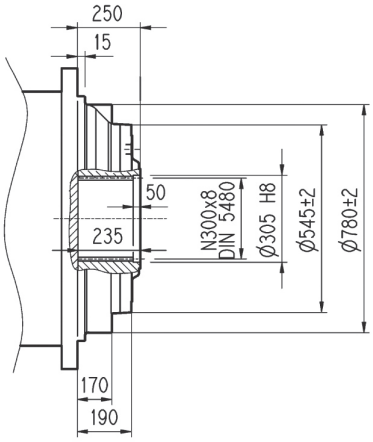

FP

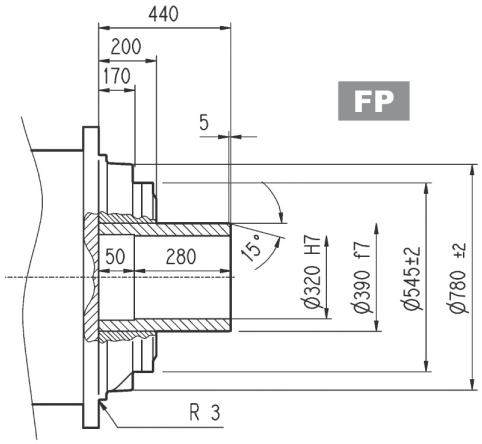

FZP

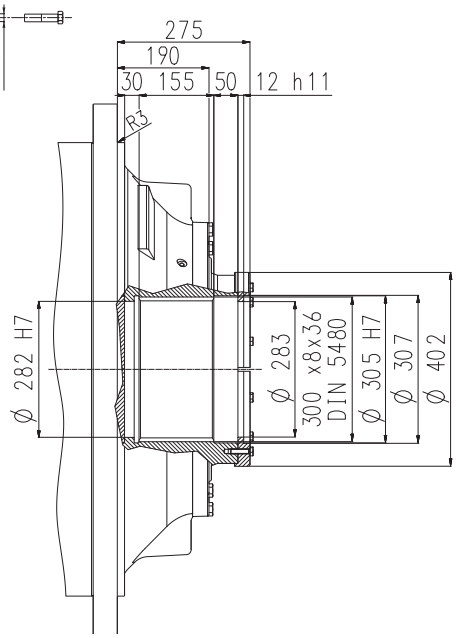

FP	T_{2max} = 6,372,540 lb•in

Dimensions are in mm

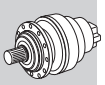

Metric

Flange

W0A

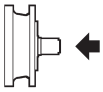

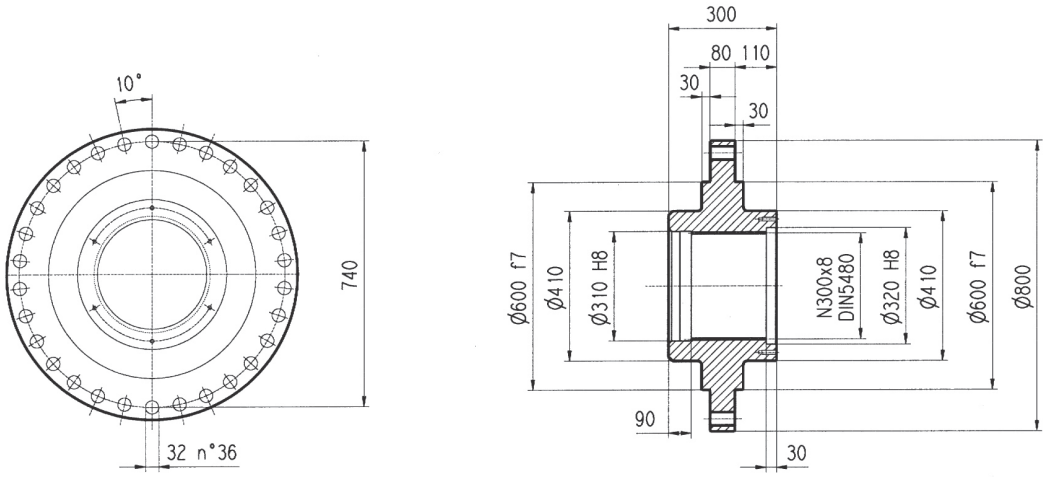

Material: Steel C40

Dimensions are in mm

Shrink disc

G0A

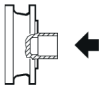

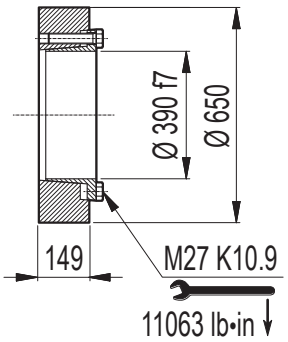

Dimensions are in mm

321 L 321 R

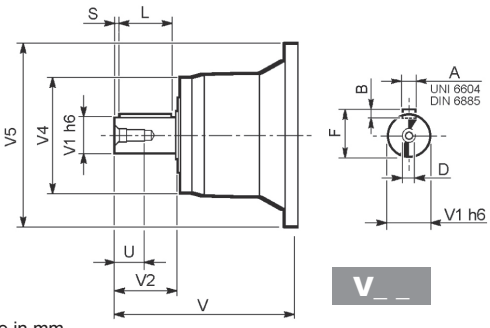

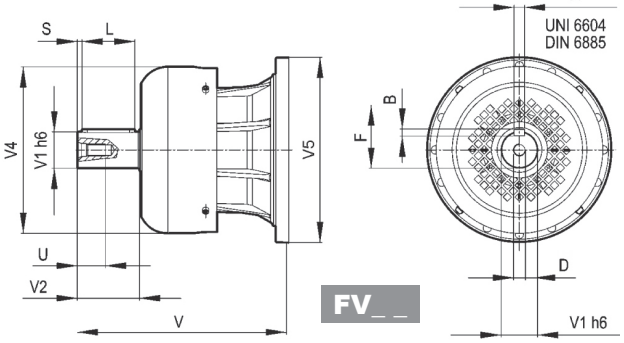

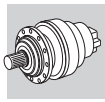

Dimensions are in mm

		V	V1	V2	V4	V5	A	B	F	L	S	D	U
321 L3	**V11B**	343	80	130	200	445	22	14	85	110	10	M16	36
	FV11B	451	80	130	347.5	445	22	14	85	110	10	M16	36
321 L4	**V07B**	315	80	130	200	345	22	14	85	110	10	M16	36
	FV07B	375	80	130	347.5	348	22	14	85	110	10	M16	36
	V07A	313	60	105	155	345	18	11	64	90	7.5	M16	36
	FV07A	363	60	105	309	348	18	11	64	90	7.5	M16	36
321 R4 (B) (C)	**V06B**	307	60	105	155	292	18	11	64	90	7.5	M16	36
	FV06B	357	60	105	309	292	18	11	64	90	7.5	M16	36

321 L 321 R

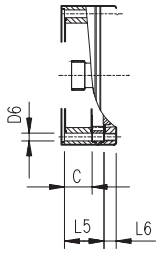

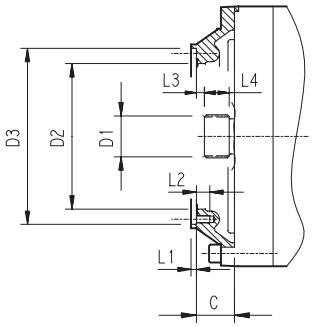

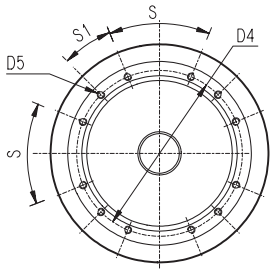

Dimensions are in mm

		C	D1	D2	D3	D4	D5	D6	L1	L2	L3	L4	L5	L6	S	S1	Input
321 L1	Please consult Bonfiglioli Technical Service																
321 L2	**V9AF**	181	120x3 DIN 5480	365	390 f7	415	M16 n°18	—	4	30	3	65	—	—	20°	20°	F
321 L3	**V9AD**	75	80x74 DIN 5482	270	335 H7	314	M16 n°8	—	5	30	9.5	40	—	—	60°	30°	D
321 L4	**V9AB**	51	58x53 DIN 5482	195	236 H7	222	M10 n°12	—	4	18	11	22	—	—	45°	22.5°	B
321 R4 (B) (C)	**V9AB**	45	58x53 DIN 5482	195	236 H7	222	M10 n°12	—	4	18	11	22	—	—	45°	22.5°	B

3/V 21 L4

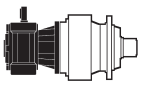

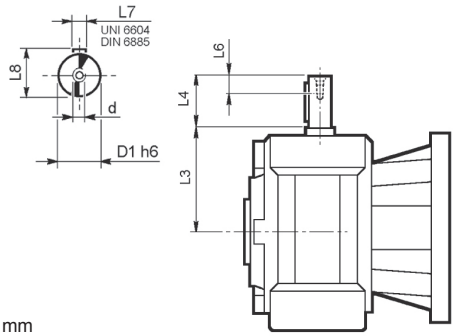

Dimensions are in mm

	D1 h6	L3	L4	L6	L7	L8	d
3/V 21 L4_HS	55	276	110	40	16	59	M16

321 L 321 R

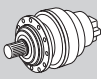

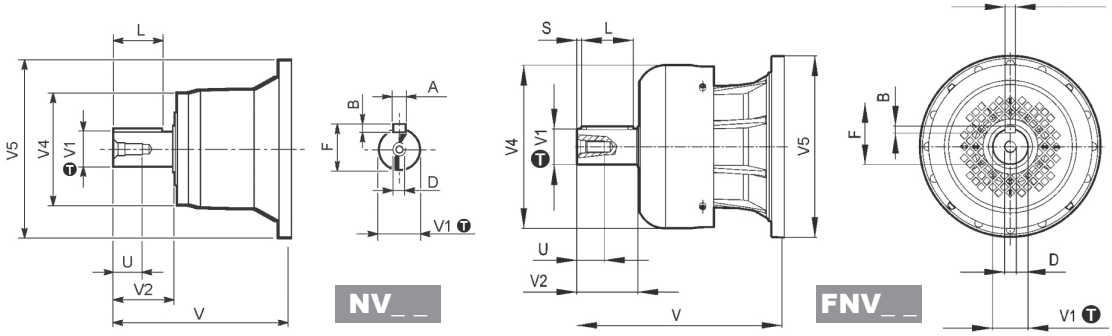

inch	T
3.000	0 / -0.00075
2.375	0 / -0.00053

Dimensions are in Inch except when shown in *italic [mm]*

		V	V1	V2	V4	V5	A	B	F	L	D	U
321 L3	**NV11B**	13.563	3.000	5.000	8.160	16.850	0.750	0.750	3.328	4.374	3/4-10 UNC	1.654
	FNV11B	17.835	3.000	5.000	13.678	16.850	0.750	0.750	3.328	4.374	3/4-10 UNC	1.654
321 L4	**NV07B**	12.283	3.000	5.000	7.165	13.699	0.750	0.750	3.328	4.374	3/4-10 UNC	1.654
	FNV07B	14.646	3.000	5.000	13.677	13.699	0.750	0.750	3.328	4.374	3/4-10 UNC	1.654
	NV07A	13.130	2.375	4.750	6.024	13.700	0.625	0.625	2.645	4.250	3/4-10 UNC	1.654
	FNV07A	15.104	2.375	4.750	6.811	13.700	0.625	0.625	2.645	4.250	3/4-10 UNC	1.654
321 R4 (B) (C)	**NV06B**	12.703	2.375	4.750	6.417	11.496	0.625	0.625	2.646	4.252	3/4-10 UNC	1.654
	FNV06B	14.652	2.375	4.750	12.165	11.496	0.625	0.625	2.646	4.252	3/4-10 UNC	1.654

321 L 321 R

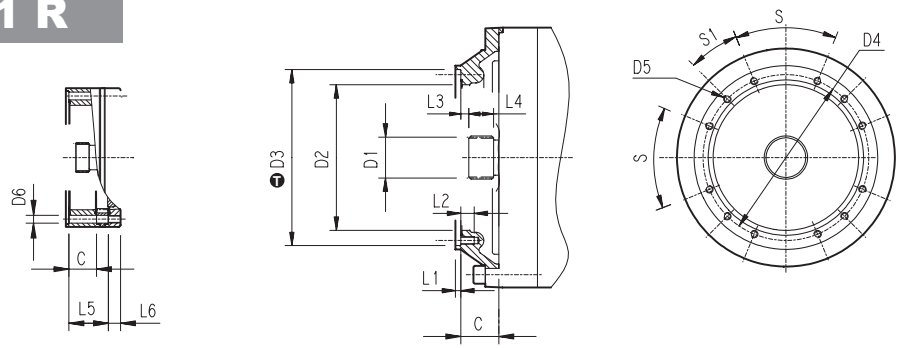

inch	T
15.35	-0.000708 / -0.00295
13.19	+0.00224 / 0
9.29	+0.00181 / 0

Dimensions are in Inch except when shown in *italic [mm]*

		C	D1	D2	D3	D4	D5	D6	L1	L2	L3	L4	L5	L6	S	S1	Input
321 L1	Please consult Bonfiglioli Technical Service																
321 L2	**V9AF**	7.13	*120x3 DIN 5480*	14.37	15.35	16.34	*M16 n°18*	—	0.16	1.18	0.12	2.56	—	—	20°	20°	F
321 L3	**V9AD**	2.95	*80x74 DIN 5482*	10.63	13.19	12.36	*M16 n°8*	—	0.20	1.18	0.37	1.57	—	—	60°	30°	D
321 L4	**V9AB**	2.01	*58x53 DIN 5482*	7.68	9.29	8.74	*M10 n°12*	—	0.16	0.71	0.43	0.87	—	—	45°	22.5°	B
321 R4 (B) (C)	**V9AB**	1.77	*58x53 DIN 5482*	7.68	9.29	8.74	*M10 n°12*	—	0.16	0.71	0.43	0.87	—	—	45°	22.5°	B

Permissible radial and axial loads on output shaft with $Fh_2 : n_2 \cdot h = 100000$

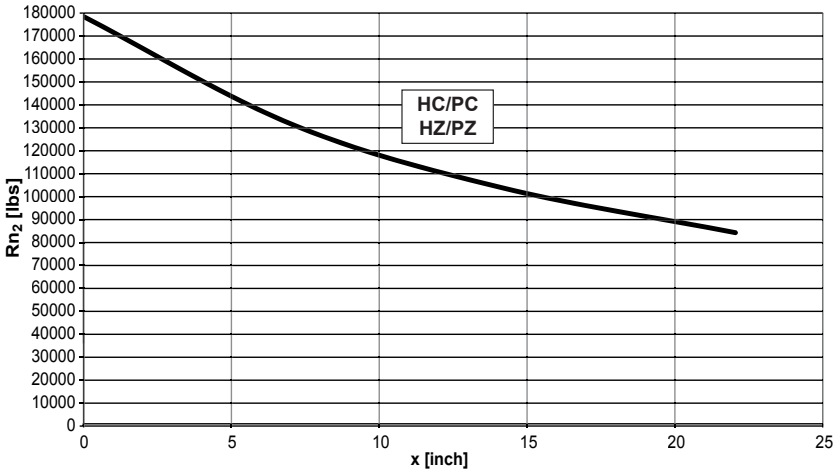

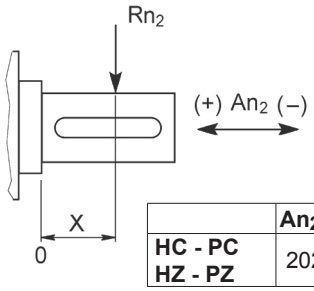

	An2 (+)	An2 (-)
HC - PC HZ - PZ	20232	26976

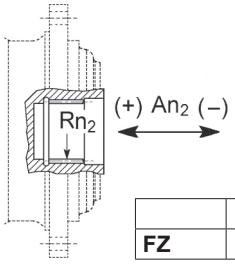

	Rn2	An2 (+/-)
FZ	125212	18782

Load corrective factor fh_2 on shafts	$Fh_2 = n_2 \cdot h$		10000	25000	50000	100000	500000	1000000
	fh_2	FZ	**2.15**	**1.59**	**1.26**	**1.00**	**0.58**	**0.46**
		HZ - HC - PZ - PC	**1.54**	**1.35**	**1.23**	**1.00**	**0.62**	**0.50**

Permissible radial loads on input shaft with $Fh_1 : n_1 \cdot h = 250000$

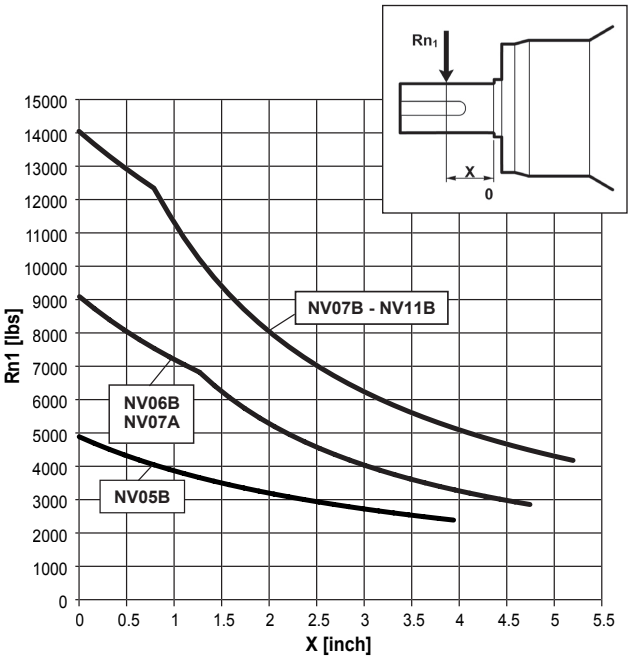

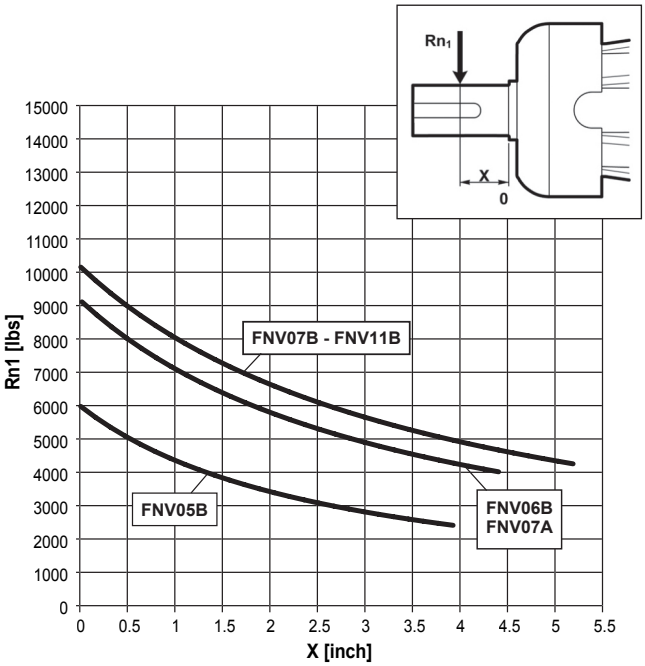

Load corrective factor fh_1 on shafts	$Fh_1 = n_1 \cdot h$	250000	500000	1000000	2000000	5000000	10000000
	fh_1	**1**	**0.79**	**0.63**	**0.50**	**0.37**	**0.29**

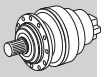

323 L

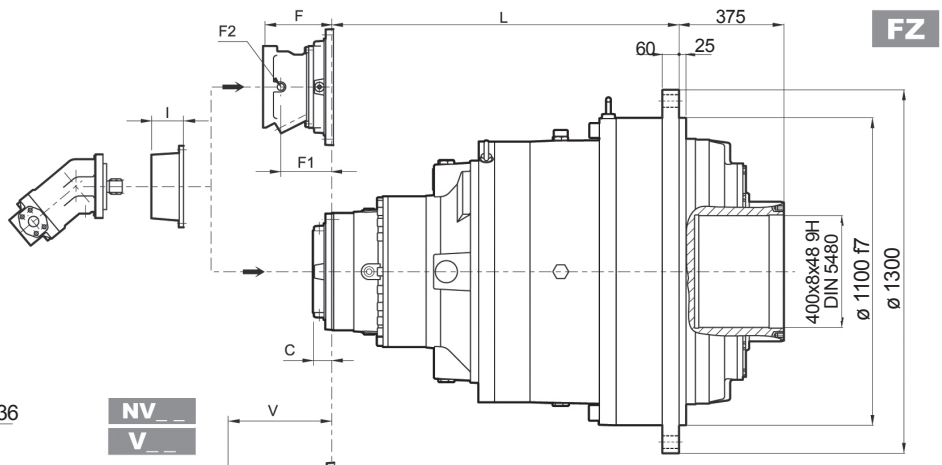

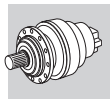

Metric

Imperial

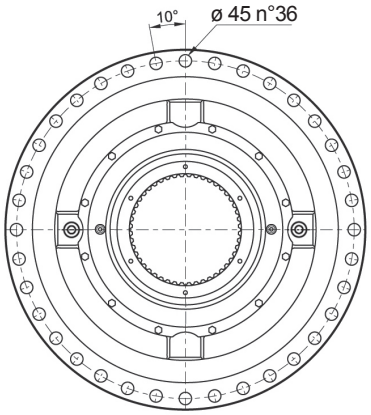

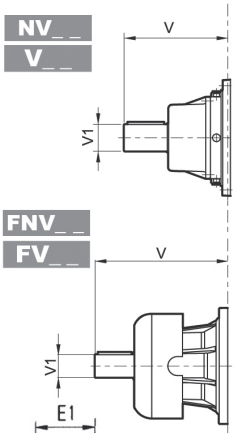

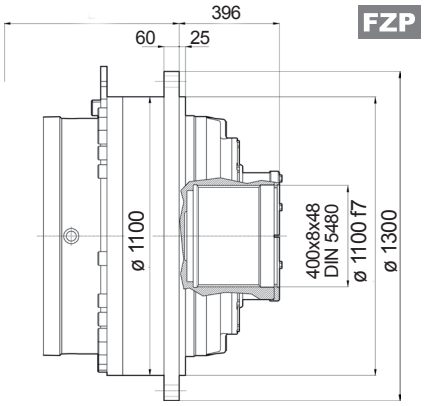

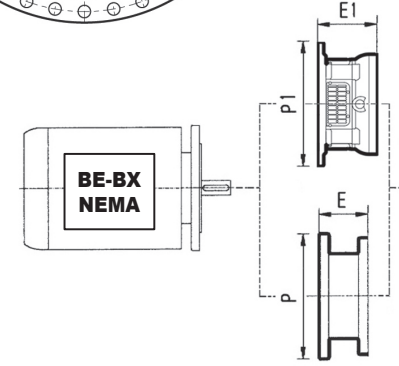

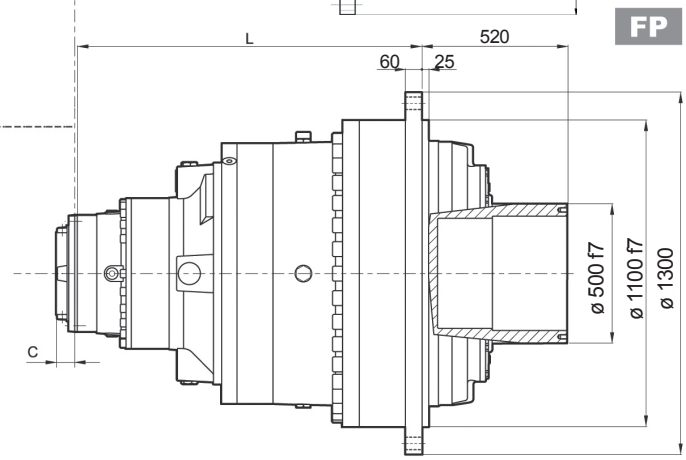

	PF 225		PF 250	
	E1	P1	E1	P1
323 L4	*250*	*580*	*250*	*580*

	PF N360TC	
	E1	P1
323 L4	12.402	22.835

FP T_{2max} = 13,984,180 lb•in

NOTE: for R design contact Bonfiglioli Technical Service
for PF N400TC contact Bonfiglioli Technical Service

Dimensions are in mm when shown in italic, otherwise dimensions are in inches

	L		Kg		V_ _			FV_ _			NV_ _			FNV_ _		
	FZ-FZP	FP	FZ-FZP	FP	V	V1	Kg	V	V1	Kg	V	V1	lbs	V	V1	lbs
323 L1	Please consult Bonfiglioli Technical Service															
323 L2	*666*	*666*	*4450*	*4550*	—	—	—	—	—	—	—	—	—	—	—	—
323 L3	*1049*	*1049*	*4750*	*4850*	*556*	*120*	*125*	—	—	—	—	—	—	—	—	—
323 L4	*1261*	*1261*	*4900*	*5000*	*315*	*80*	*35*	*456*	*80*	*85*	13.563	3.000	121.3	17.835	3.000	140.0

				P200		P225		P250		N400TC								
	C	C	Input	E	P	E	P	E	P	E	P	I	F	F1	F2	Type	Input	Kg
323 L1	—	—	—	—	—	—	—	—	—	—	—		—	—	—	—	—	—
323 L2	*245*	9.646	G	—	—	—	—	—	—	—	—		—	—	—	—	—	—
323 L3	*116*	4.567	E	—	—	—	—	—	—	—	—		—	—	—	—	—	—
323 L4	*81*	3.189	D	*267*	*400*	*297*	*450*	*297*	*550*	11.339	17.480	532	*201*	*48*	1/4 G	6	B	*22*

323 L

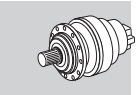

Metric

FZ

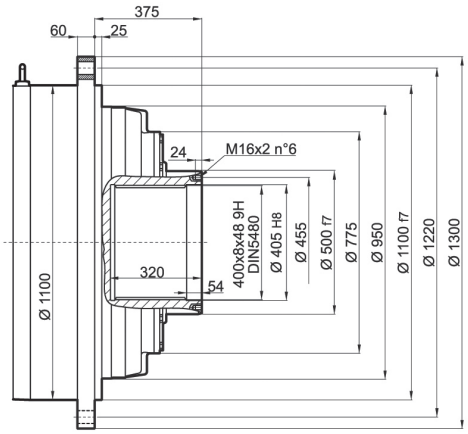

FP

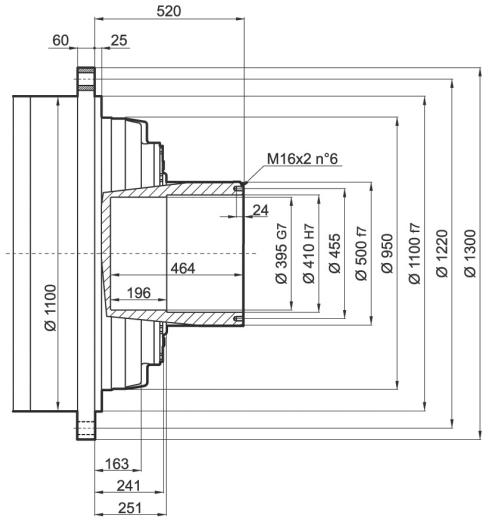

FZP

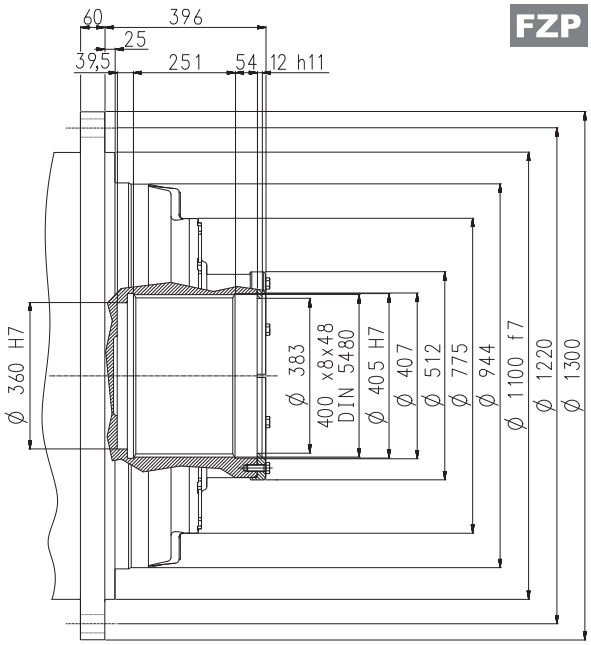

Shrink disc

G0A

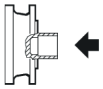

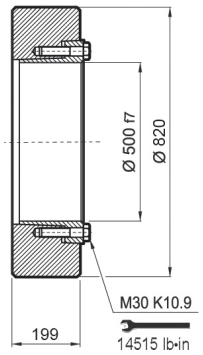

Dimensions are in mm

FP	T_{2max} = 13,984,180 lb•in

Dimensions are in mm

Bonfiglioli Riduttori

323 L

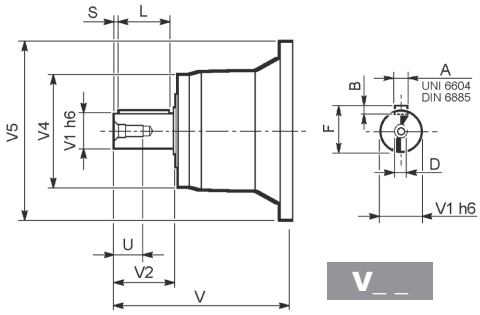

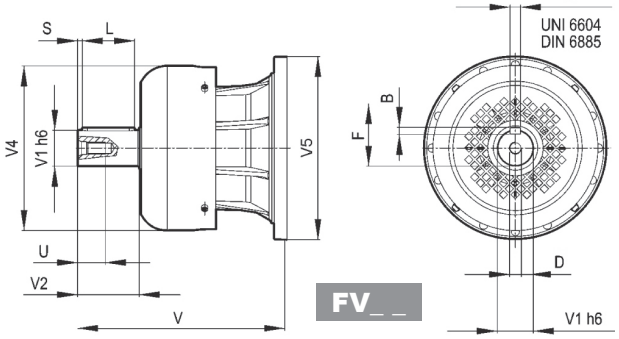

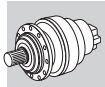

Metric

Imperial

Dimensions are in mm when shown in italic, otherwise dimensions are in inches

		V	V1	V2	V4	V5	A	B	F	L	S	D	U
323 L3	***V15B***	*556*	*120*	*210*	*230*	*542*	*32*	*18*	*127*	*180*	*15*	*M24*	*50*
323 L4	***V11B***	*348*	*80*	*130*	*200*	*428*	*22*	*14*	*85*	*110*	*10*	*M16*	*36*
	FV11B	*456*	*80*	*130*	*347.5*	*428*	*22*	*14*	*85*	*110*	*10*	*M16*	*36*

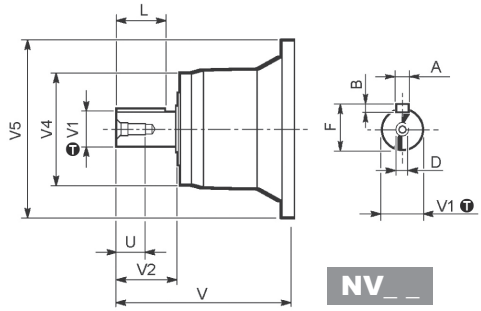

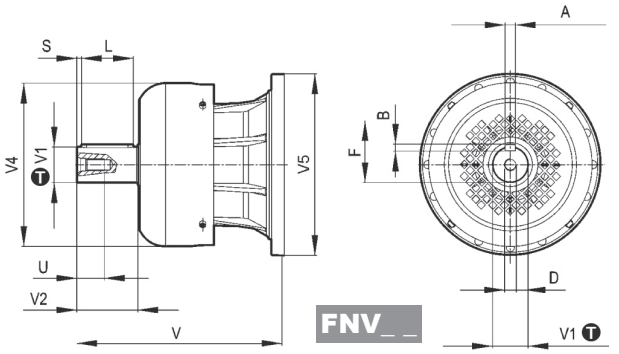

inch	T
3.000	0 -0.00075

Dimensions are in mm when shown in italic, otherwise dimensions are in inches

		V	V1	V2	V4	V5	A	B	F	L	D	U
323 L4	**NV11B**	13.563	3.000	5.000	8.160	16.850	0.750	0.750	3.328	4.374	3/4-10 UNC	1.654
	FNV11B	17.835	3.000	5.000	13.678	16.850	0.750	0.750	3.328	4.374	3/4-10 UNC	1.654

323 L

inch	T
18.66	-0.000787 -0.00326
16.22	+0.00248 0
13.19	+0.00224 0
9.29	+0.00181 0

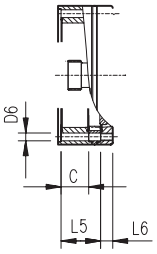

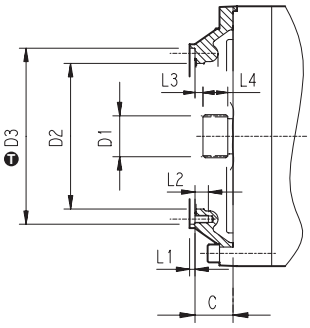

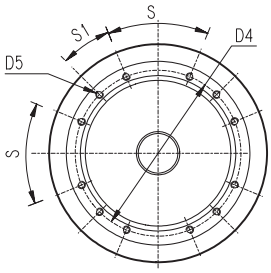

Dimensions are in mm when shown in italic, otherwise dimensions are in inches

		C	D1	D2	D3	D4	D5	D6	L1	L2	L3	L4	L5	L6	S	S1	Input
323 L1	Please consult Bonfiglioli Technical Service																
323 L2	**V9AG**	*245*	*150x5x28 DIN 5480*	*444*	*474 g7*	*503*	*M20 n°20*	*20*	*5*	*40*	*20*	*82*	—	—	*30°*	*15°*	G
323 L3	**V9AE**	*116*	*100x94 DIN 5482*	*340*	*412 H7*	*390*	*M16 n°18*	—	*7*	*30*	*8*	*55*	—	—	*20°*	*20°*	E
323 L4 (SF)	**V9AD**	*81*	*80x74 DIN 5482*	*270*	*335 H7*	*314*	*M16 n°8*	—	*5*	*30*	*8.5*	*40*	—	—	*60°*	*30°*	D
323 L4 (br 6")	**V9AB**	*152.5*	*58x53 DIN 5482*	*180*	*236 H7*	*222*	*M10 n° 12*	—	*4*	*18*	*12*	*22*	—	—	*45°*	*22.5°*	B

		C	D1	D2	D3	D4	D5	D6	L1	L2	L3	L4	L5	L6	S	S1	Input
323 L1	Please consult Bonfiglioli Technical Service																
323 L2	**V9AG**	9.65	*150x5x28 DIN 5480*	17.48	18.66	19.80	*M20 n°20*	0.79	0.20	1.57	0.79	3.23	—	—	30°	15°	G
323 L3	**V9AE**	4.57	*100x94 DIN 5482*	13.39	16.22	15.35	*M16 n°18*	—	0.28	1.18	0.31	2.17	—	—	20°	20°	E
323 L4 (SF)	**V9AD**	3.19	*80x74 DIN 5482*	10.63	13.19	12.36	*M16 n°8*	—	0.20	1.18	0.33	1.57	—	—	60°	30°	D
323 L4 (br 6")	**V9AB**	*6.00*	*58x53 DIN 5482*	*7.09*	*9.29*	*8.74*	*M10 n° 12*	—	*0.16*	*0.71*	*0.47*	*0.87*	—	—	*45°*	*22.5°*	B

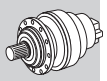

Permissible radial and axial loads on output shaft with $Fh_2 : n_2 \cdot h = 100000$

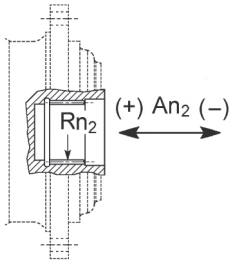

	Rn_2	An_2 (+)	An_2 (-)
FZ	114777	39129	15651

Load corrective factor fh_2 on shafts	$Fh_2 = n_2 \cdot h$		10000	25000	50000	100000	500000	1000000
	fh_2	**FZ**	**2.15**	**1.59**	**1.26**	**1.00**	**0.58**	**0.46**

Permissible radial loads on input shaft with $Fh_1 : n_1 \cdot h = 250000$

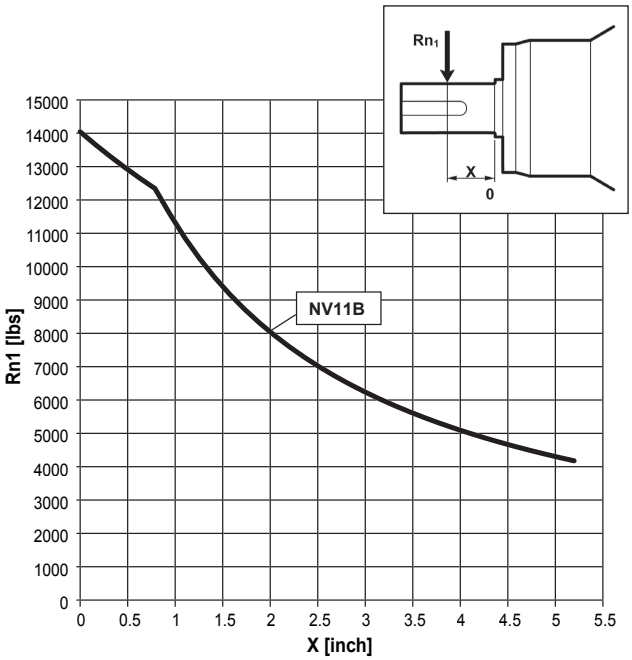

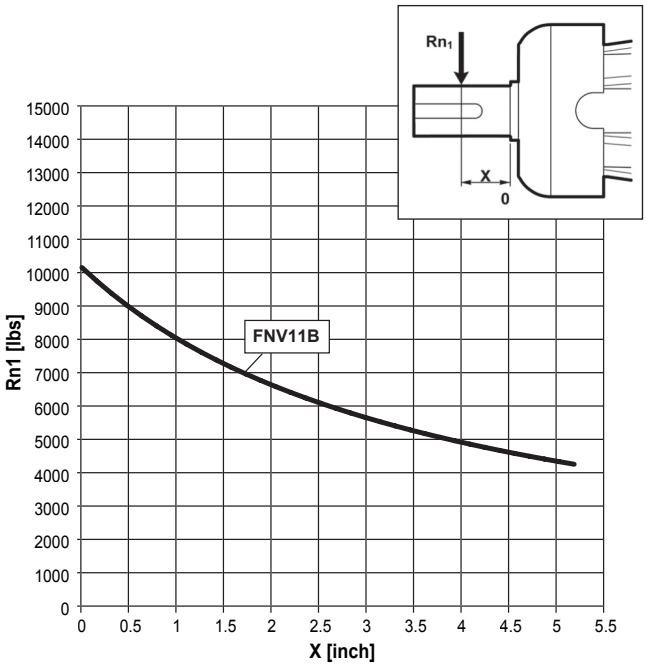

Load corrective factor fh_1 on shafts	$Fh_1 = n_1 \cdot h$	250000	500000	1000000	2000000	5000000	10000000
	fh_1	**1**	**0.79**	**0.63**	**0.50**	**0.37**	**0.29**

325 L

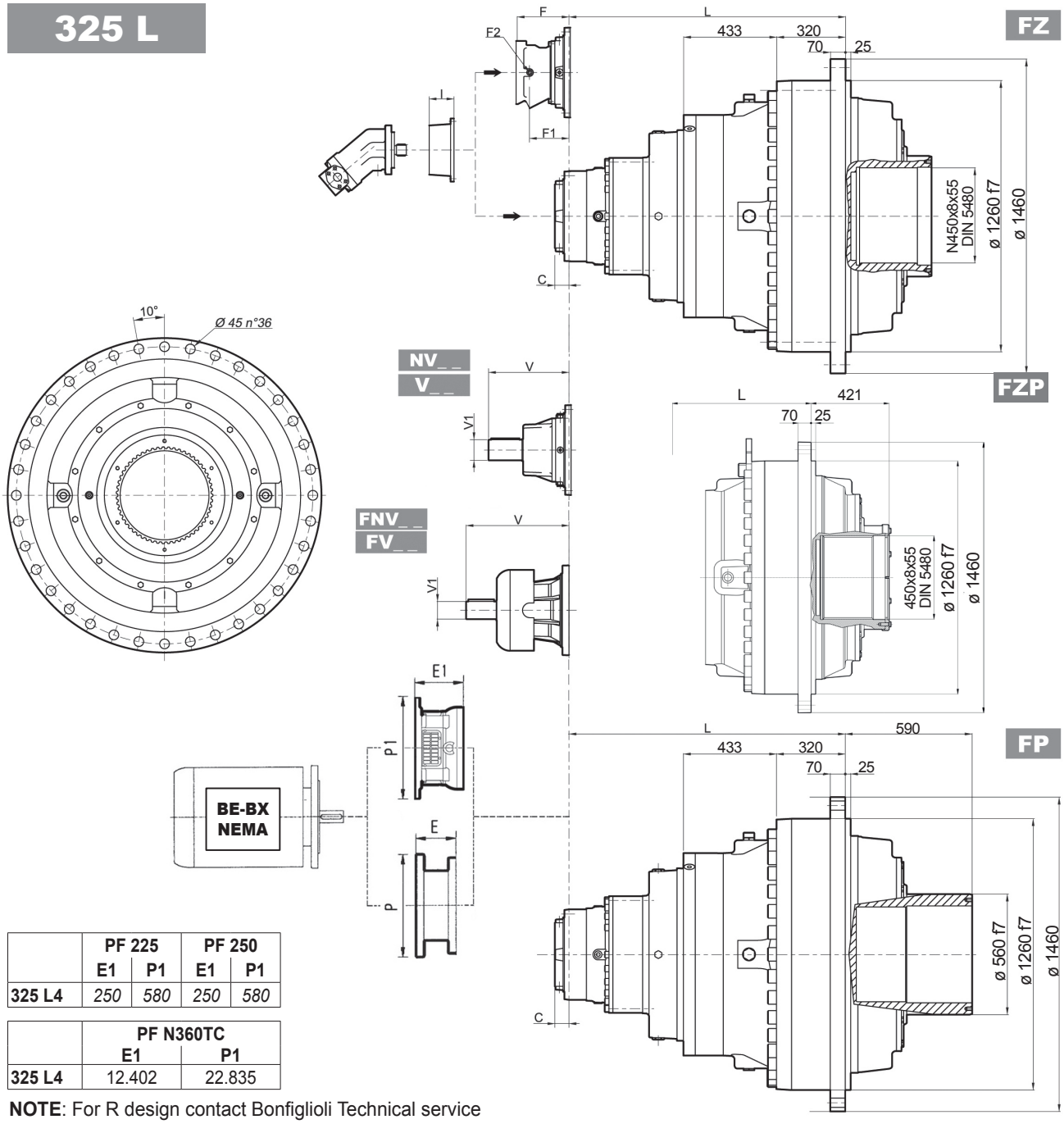

Metric

Imperial

	PF 225		PF 250	
	E1	P1	E1	P1
325 L4	*250*	*580*	*250*	*580*

	PF N360TC	
	E1	P1
325 L4	12.402	22.835

NOTE: For R design contact Bonfiglioli Technical service
For PF N400TC contact Bonfiglioli Technical service

FP T_{2max} = 17,701,490 lb•in

Dimensions are in mm when shown in italic, otherwise dimensions are in inches

	L		Kg		V_ _			FV_ _			NV_ _			FNV_ _		
	FZ-FZP	FP	FZ-FZP	FP	V	V1	Kg	V	V1	Kg	V	V1	lbs	V	V1	lbs
325 L1	Please consult Bonfiglioli Technical Service															
325 L2	*698*	*698*	*5700*	*5900*	—	—	—	—	—	—	—	—	—	—	—	—
325 L3	*1081*	*1081*	*6000*	*6200*	*556*	*120*	*125*	—	—	—	—	—	—	—	—	—
325 L4	*1293*	*1293*	*6150*	*6350*	*315*	*80*	*35*	*456*	*80*	*85*	13.563	3.000	121.3	17.835	3.000	140.0

				P200		P225		P250		N400TC								
	C	C	Input	E	P	E	P	E	P	E	P	I	F	F1	F2	Type	Input	Kg
325 L1	—	—	—	—	—	—	—	—	—	—	—		—	—	—	—	—	—
325 L2	*245*	9.646	G	—	—	—	—	—	—	—	—		—	—	—	—	—	—
325 L3	*116*	4.567	E	—	—	—	—	—	—	—	—		—	—	—	—	—	—
325 L4	*81*	3.189	D	*267*	*400*	*297*	*450*	*297*	*550*	11.339	17.480	532	*201*	*48*	1/4 G	6	B	*22*

325 L

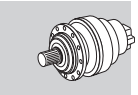

Metric

FZ

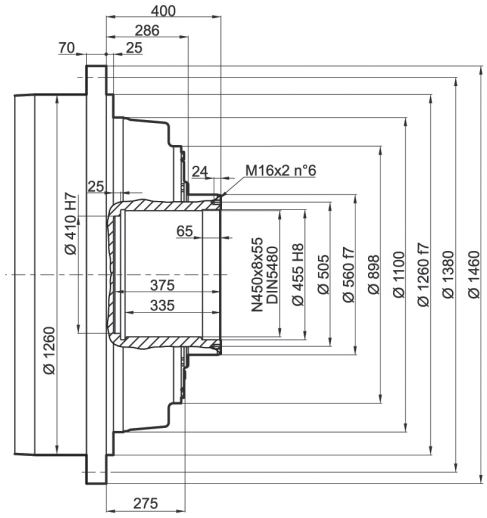

FP

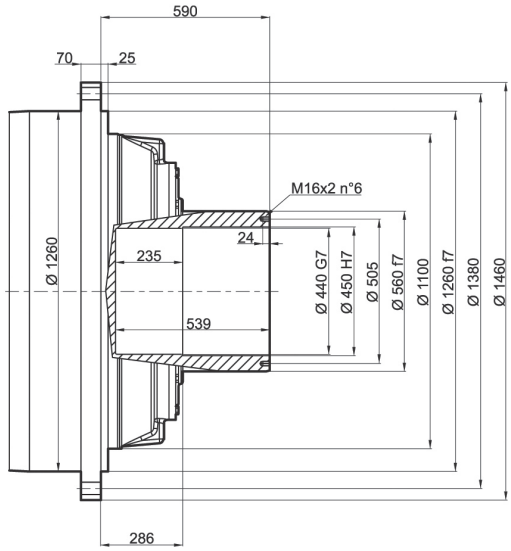

FZP

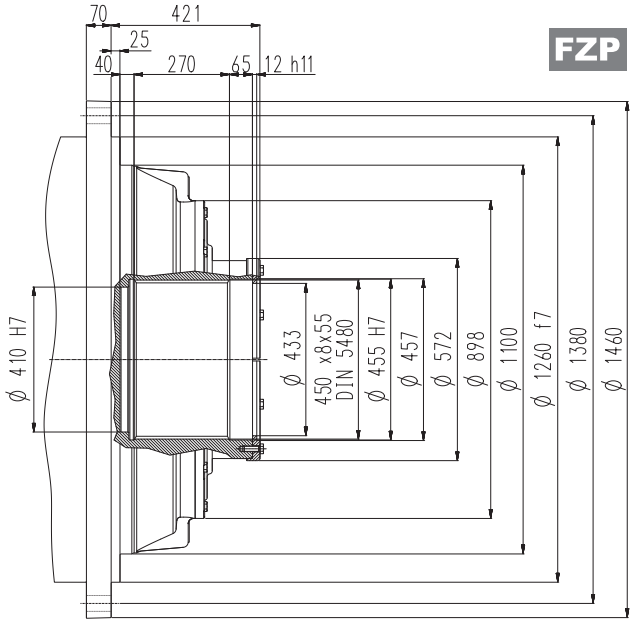

Shrink disc

G0A

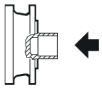

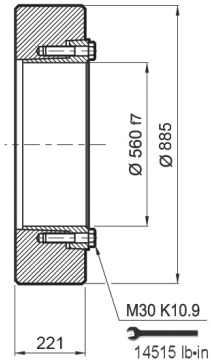

Dimensions are in mm

FP	T_{2max} = 17,701,490 lb•in

Dimensions are in mm

Bonfiglioli Riduttori

325 L

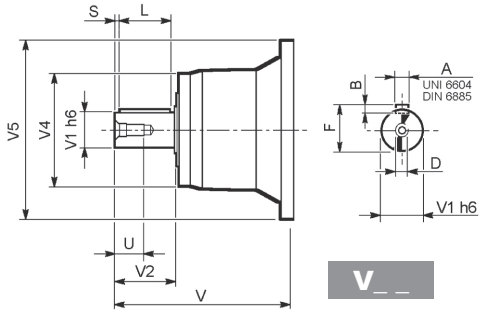

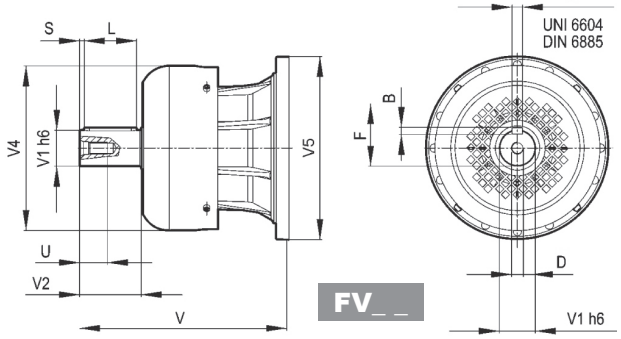

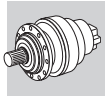

Metric

Imperial

Dimensions are in mm when shown in italic, otherwise dimensions are in inches

		V	V1	V2	V4	V5	A	B	F	L	S	D	U
325 L3	***V15B***	*556*	*120*	*210*	*230*	*542*	*32*	*18*	*127*	*180*	*15*	*M24*	*50*
325 L4	***V11B***	*348*	*80*	*130*	*200*	*428*	*22*	*14*	*85*	*110*	*10*	*M16*	*36*
	FV11B	*456*	*80*	*130*	*347.5*	*428*	*22*	*14*	*85*	*110*	*10*	*M16*	*36*

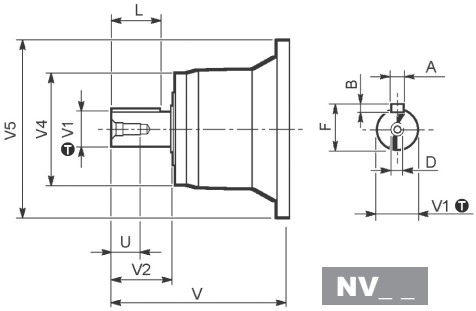

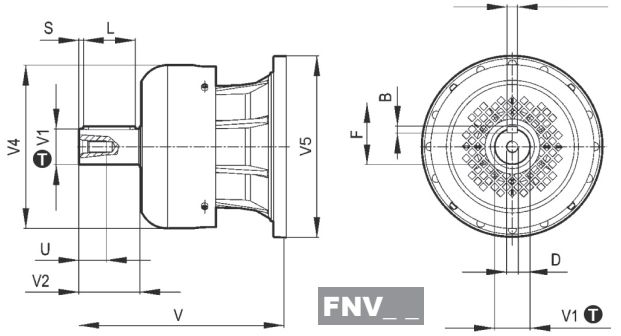

inch	T
3.000	0 -0.00075

Dimensions are in mm when shown in italic, otherwise dimensions are in inches

		V	V1	V2	V4	V5	A	B	F	L	D	U
325 L4	**NV11B**	13.563	3.000	5.000	8.160	16.850	0.750	0.750	3.328	4.374	3/4-10 UNC	1.654
	FNV11B	17.835	3.000	5.000	13.678	16.850	0.750	0.750	3.328	4.374	3/4-10 UNC	1.654

325 L

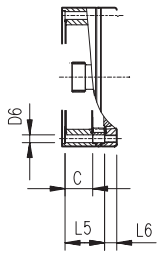

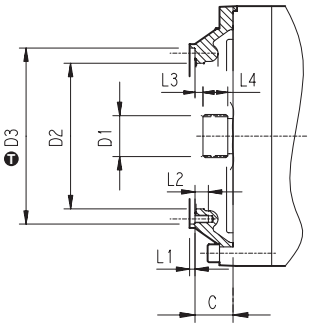

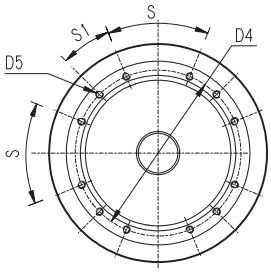

inch	T
18.66	-0.000787 -0.00326
16.22	+0.00248 0
13.19	+0.00224 0

Dimensions are in mm when shown in italic, otherwise dimensions are in inches

		C	D1	D2	D3	D4	D5	D6	L1	L2	L3	L4	L5	L6	S	S1	Input
325 L1	Please consult Bonfiglioli Technical Service																
325 L2	**V9AG**	*245*	*150x5x28 DIN 5480*	*444*	*474 g7*	*503*	*M20 n°20*	*20*	*5*	*40*	*20*	*82*	—	—	*30°*	*15°*	G
325 L3	**V9AE**	*116*	*100x94 DIN 5482*	*340*	*412 H7*	*390*	*M16 n°18*	—	*7*	*30*	*8*	*55*	—	—	*20°*	*20°*	E
325 L4	**V9AD**	*81*	*80x74 DIN 5482*	*270*	*335 H7*	*314*	*M16 n°8*	—	*5*	*30*	*8.5*	*40*	—	—	*60°*	*30°*	D

		C	D1	D2	D3	D4	D5	D6	L1	L2	L3	L4	L5	L6	S	S1	Input
325 L1	Please consult Bonfiglioli Technical Service																
325 L2	**V9AG**	9.65	*150x5x28 DIN 5480*	17.48	18.66	19.80	*M20 n°20*	0.79	0.20	1.57	0.79	3.23	—	—	30°	15°	G
325 L3	**V9AE**	4.57	*100x94 DIN 5482*	13.39	16.22	15.35	*M16 n°18*	—	0.28	1.18	0.31	2.17	—	—	20°	20°	E
325 L4	**V9AD**	3.19	*80x74 DIN 5482*	10.63	13.19	12.36	*M16 n°8*	—	0.20	1.18	0.33	1.57	—	—	60°	30°	D

325 L

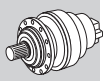

Imperial

Permissible radial and axial loads on output shaft with $Fh_2 : n_2 \cdot h = 100000$

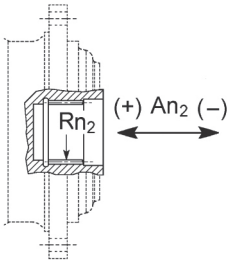

	Rn_2	An_2 (+)	An_2 (-)
FZ	114777	39129	15651

Load corrective factor fh_2 on shafts	$Fh_2 = n_2 \cdot h$		10000	25000	50000	100000	500000	1000000
	fh_2	**FZ**	**2.15**	**1.59**	**1.26**	**1.00**	**0.58**	**0.46**

Permissible radial loads on input shaft with $Fh_1 : n_1 \cdot h = 250000$

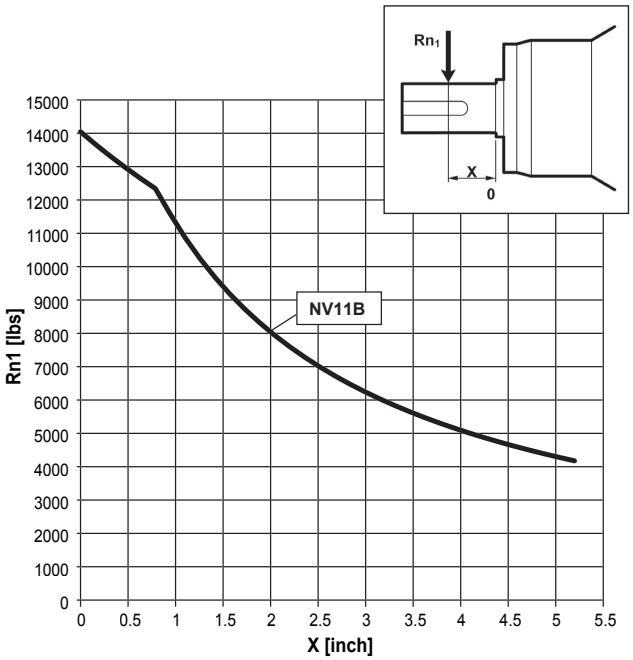

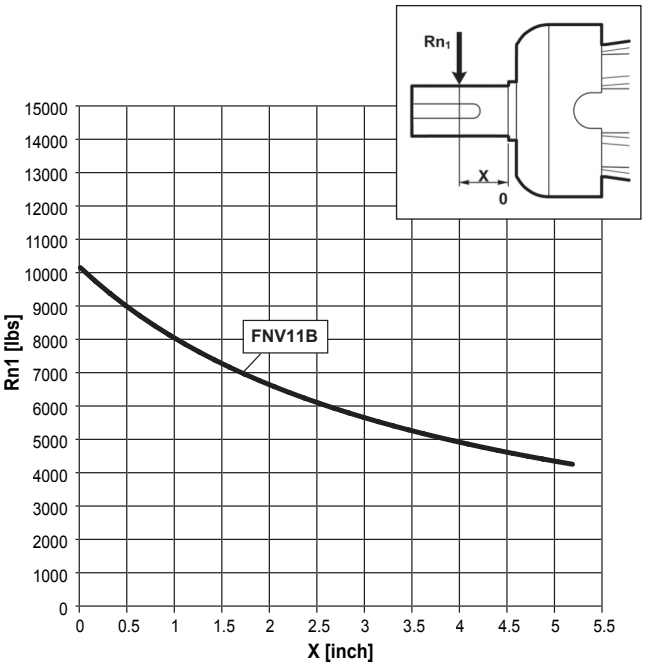

Load corrective factor fh_1 on shafts	$Fh_1 = n_1 \cdot h$	250000	500000	1000000	2000000	5000000	10000000
	fh_1	**1**	**0.79**	**0.63**	**0.50**	**0.37**	**0.29**

Bonfiglioli Riduttori

CUSTOMER'S SHAFT

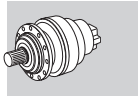

FP

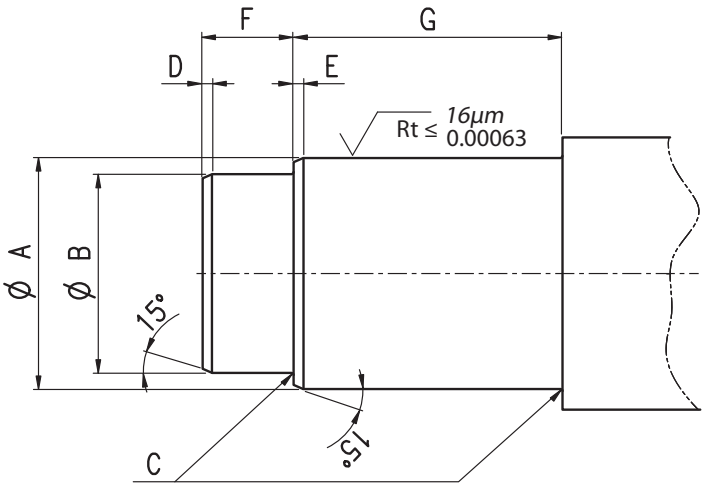

Dimensions are in Inch except when shown in *italic [mm]*

	A		B		C	D	E	F	G	Shaft material
	[*mm*] [in]									
300	*42* 1.653	*g6* -0.0035 -0.0010	*35* 1.377	*g6* -0.0035 -0.0010	*1.6* 0.062	*2* 0.078	*2* 0.078	*18* 0.708	*38* 1.496	Suggested material: Steel with tensile strength $\sigma_R \geq 101{,}526.39$ lbs/in²
301	*52* 2.047	*g6* -0.0004 -0.0011	*35* 1.377	*g6* -0.0035 -0.0010	*1.6* 0.062	*2* 0.078	*2* 0.078	*18* 0.708	*38* 1.496	
303 304 305	*75* 2.952	*g6* -0.0004 -0.0011	*65* 2.559	*g6* -0.0004 -0.0011	*1.6* 0.062	*2* 0.078	*2* 0.078	*30* 1.181	*65* 2.559	
306	*90* 3.543	*g6* -0.0005 -0.0013	*75* 2.952	*g6* -0.0004 -0.0011	*1.6* 0.062	*3* 0.118	*3* 0.118	*55* 2.165	*85* 3.346	
307	*100* 3.937	*g6* -0.0005 -0.0013	*85* 3.346	*g6* -0.0005 -0.0013	*1.6* 0.062	*3* 0.118	*3* 0.118	*40* 1.574	*95* 3.740	
309	*120* 4.724	*g6* -0.0005 -0.0013	— —		*1.6* 0.062	—	*3* 0.118	—	*140* 5.511	
310M	*130* 5.118	*g6* -0.0006 -0.0015	— —		*1.6* 0.062	—	*3* 0.118	—	*155* 6.102	
311M	*135* 5.314	*g6* -0.0006 -0.0015	— —		*1.6* 0.062	—	*3* 0.118	—	*150* 5.905	
313M	*140* 5.511	*g6* -0.0006 -0.0015	*130* 5.118	*g6* -0.0006 -0.0015	*2* 0.078	*3* 0.118	*3* 0.118	*45* 1.771	*150* 5.905	
314M	*180* 7.086	*g6* -0.0006 -0.0015	*160* 6.299	*g6* -0.0006 -0.0015	*1.6* 0.062	*3* 0.118	*3* 0.118	*50* 1.968	*200* 7.874	
315M	*180* 7.086	*g6* -0.0006 -0.0015	*160* 6.299	*g6* -0.0006 -0.0015	*1.6* 0.062	*3* 0.118	*3* 0.118	*50* 1.968	*200* 7.874	
316M	*180* 7.086	*g6* -0.0006 -0.0015	*165* 6.496	*g6* -0.0006 -0.0015	*1.6* 0.062	*3* 0.118	*3* 0.118	*90* 3.543	*180* 7.086	
317M	*200* 7.874	*g6* -0.0006 -0.0017	— —		*1.6* 0.062	—	*3* 0.118	—	*250* 9.842	
318M	*220* 8.661	*g6* -0.0006 -0.0017	*200* 7.874	*g6* -0.0006 -0.0017	*2* 0.078	*3* 0.118	*3* 0.118	*130* 5.118	*180* 7.086	
319	*280* 11.023	*g6* -0.0007 -0.0019	— —		*2* 0.078	—	*3* 0.118	—	*300* 11.811	
321	*320* 12.598	*g6* -0.0007 -0.0021	— —		*2* 0.078	—	*3* 0.118	—	*300* 11.811	
323	*410* 16.141	*g6* -0.0008 -0.0024	— —		*2* 0.078	—	*3* 0.118	—	*250* 9.842	
325	*450* 17.716	*g6* -0.0008 -0.0024	— —		*2* 0.078	—	*3* 0.118	—	*300* 11.811	

FDK

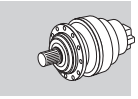

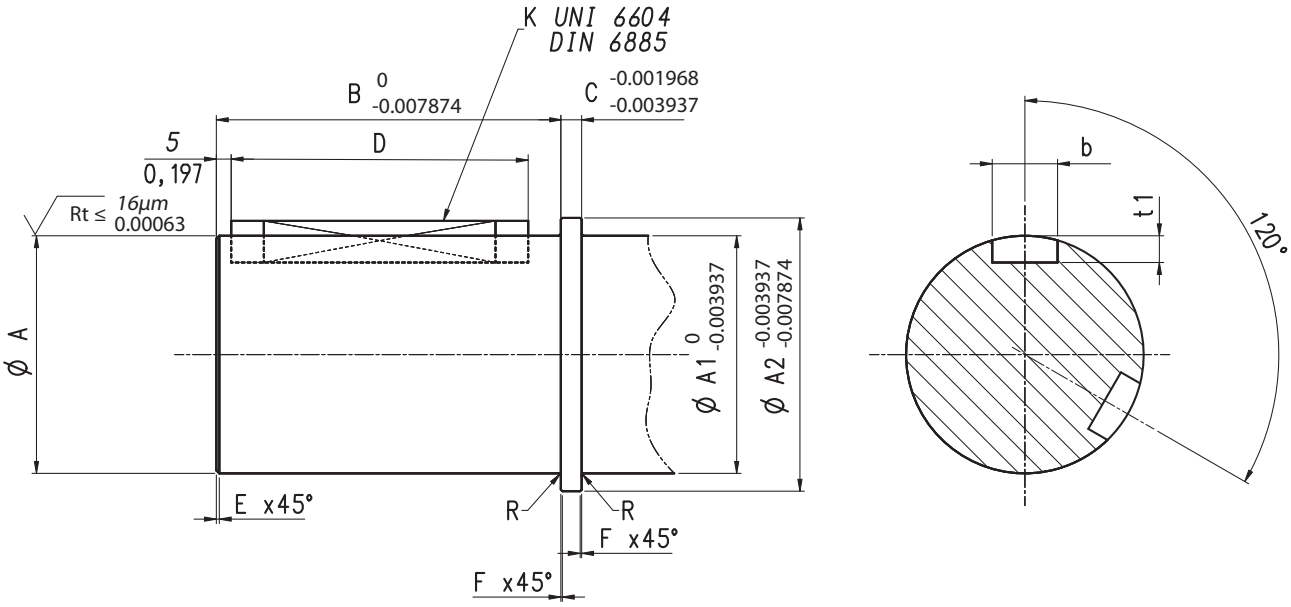

Dimensions are in Inch except when shown in *italic [mm]*

	A	B	A1	A2	C	Shaft material	Keyways dimensions Keyways UNI 6604 / DIN 6885		b	t_1	E	F			R Fillets
											Chamfer dimensions				
	[*mm*] [in]					Suggested material: Steel with tensile strength $\sigma_R \geq 130{,}533.93$ lbs/in2	—	[*mm*]	[*mm*] [in]						
300	*35* *g6* -0.0004 -0.0010 1.377	*64* 2.520	*35* 1.378	*39* 1.535	*4* 0.157		N°2 x 120°	*10x8x50*	*10* *H8* +0.0009 0 0.394	Dimension according to UNI6604 DIN 6885 standard.	*1* 0.039	x 45°	*0.5* 0.020	x 45°	(*)
301	*35* *g6* -0.0004 -0.0010 1.377	*64* 2.520	*35* 1.378	*43* 1.693	*5* 0.197		N°2 x 120°	*10x8x50*	*10* *H8* +0.0009 0 0.394		*1* 0.039	x 45°	*0.5* 0.020	x 45°	*0.5* 0.020
303 304 305	*65* *g6* -0.0004 -0.0011 2.559	*95* 3.740	*65* 2.559	*75* 2.953	*6* 0.236		N°2 x 120°	*18x11x80*	*18* *H8* +0.0011 0 0.709		*1* 0.039	x 45°	*0.5* 0.020	x 45°	*0.8* 0.031
306	*80* *g6* -0.0004 -0.0011 3.150	*116* 4.567	*80* 3.150	*92* 3.622	*7* 0.276		N°2 x 120°	*22x14x100*	*22* *H8* +0.0013 0 0.866		*1* 0.039	x 45°	*0.5* 0.020	x 45°	*0.8* 0.031
307	*90* *g6* -0.0005 -0.0013 3.543	*141* 5.551	*90* 3.543	*102* 4.016	*8* 0.315		N°2 x 120°	*25x14x125*	*25* *H8* +0.0013 0 0.984		*2* 0.079	x 45°	*1* 0.039	x 45°	*0.8* 0.031
309	*120* *g6* -0.0005 -0.0013 4.724	*128* 5.039	*120* 4.724	*136* 5.354	*10* 0.394		N°2 x 120°	*32x18x110*	*32* *H8* +0.0015 0 1.260		*2* 0.079	x 45°	*1* 0.039	x 45°	*1.6* 0.063
310M	*130* *g6* -0.0006 -0.0015 5.118	*138* 5.433	*130* 5.118	*146* 5.748	*10* 0.394		N°2 x 120°	*32x18x120*	*32* *H8* +0.0015 0 1.260		*2* 0.079	x 45°	*1* 0.039	x 45°	*1.6* 0.063

(*) Relief groove (UNI 4386 - 75 E0.6x0.3)

Bonfiglioli Riduttori

FZP

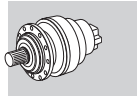

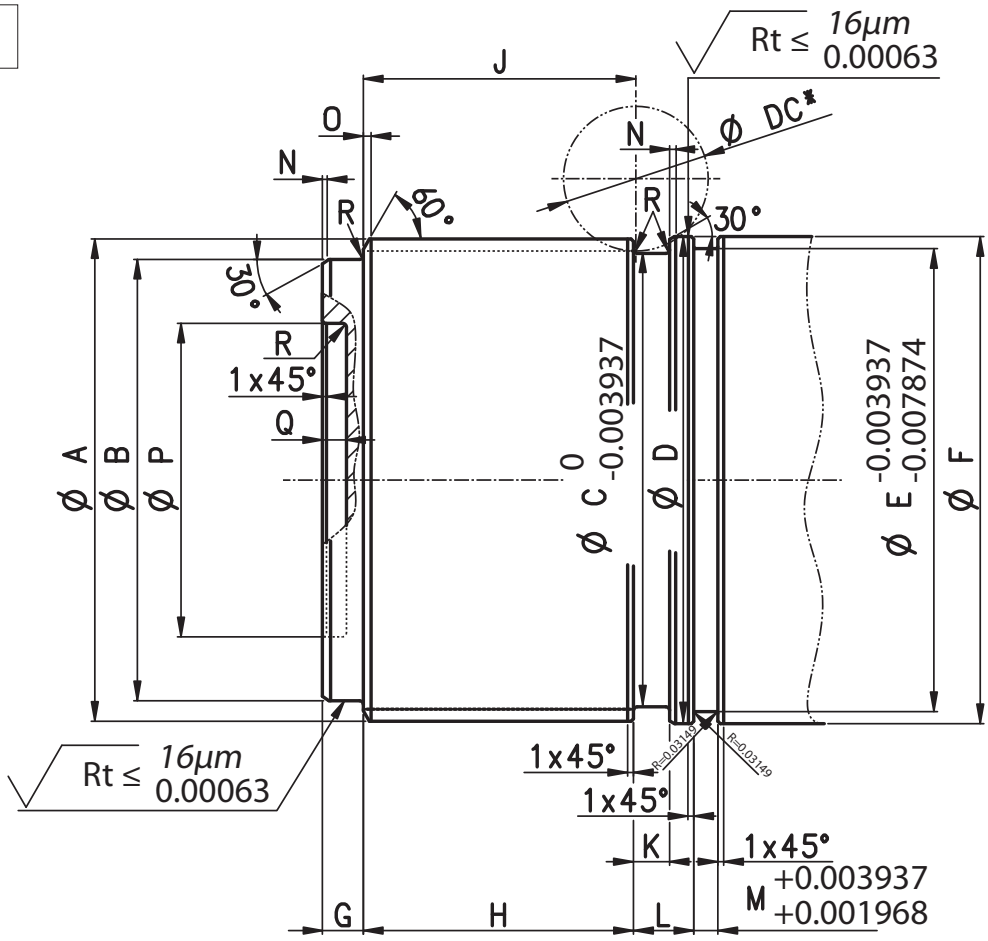

Dimensions are in Inch except when shown in *italic [mm]*

	A Splined shaft DIN 5480	B	C Relief groove diameter	Shaft material	D	E	F	G	H	K	J	L	M	N	O	P	Q	R	DC*
	[mm]	[mm] [in]			[mm] [in]														
311M	*120x3x38*	*108* g6 -0.0005 -0.0013 4.252	*112* 4.409	Suggested material: Steel with tensile strength $\sigma_R \geq 130{,}533.93$ lbs/in2	*124* g6 -0.0006 -0.0015 4.882	*112* 4.409	*124* 4.882	*19* *0.748*	*69* 2.716	*9* 0.354	*70* 2.755	*18.5* 0.728	*6* 0.236	*1* 0.039	*1.6* 0.062	-	-	*1.6* 0.062	*60* 2.362
313M	*140x5x26*	*110* g6 -0.0005 -0.0013 4.331	*132* 5.197		*142* g6 -0.0006 -0.0015 5.591	*132* 5.197	*142* 5.591	*26* 1.023	*83* 3.267	*18* 0.708	*84* 3.307	*30* 1.181	6 0.236	*1* 0.039	*2* 0.078	-	-	*3* 0.118	*60* 2.362
314M	*150x5x28*	*136* g6 -0.0006 -0.0015 5.354	*136* 5.354		*152* g6 -0.0006 -0.0015 5.984	*136* 5.354	*152* 5.984	*16* 0.629	*103* 4.055	*8* 0.314	*104* 4.094	*20* 0.787	*8* 0.314	*1* 0.039	*2* 0.078	-	-	*1.6* 0.062	*60* 2.362
315M	*150x5x28*	*136* g6 -0.0006 -0.0015 5.354	*136* 5.354		*152* g6 -0.0006 -0.0015 5.984	*136* 5.354	*152* 5.984	*16* 0.629	*103* 4.055	*8* 0.314	*104* 4.094	*20* 0.787	*8* 0.314	*1* 0.039	*2* 0.078	-	-	*1.6* 0.062	*60* 2.362
316M	*170x5x32*	*150* g6 -0.0006 -0.0015 5.906	*154* 6.063		*172* g6 -0.0006 -0.0015 6.772	*154* 6.063	*172* 6.772	*30* 1.181	*113* 4.448	*20* 0.787	*114* 4.488	*45* 1.771	*9* 0.354	*1* 0.039	*3* 0.118	-	-	*3* 0.118	*60* 2.362
317M	*200x5x38*	*187* g6 -0.0006 -0.0017 7.362	*186* 7.323		*202* g6 -0.0006 -0.0017 7.953	*192* 7.559	*202* 7.953	*16* 0.629	*100* 3.937	*19* 0.748	*101* 3.976	*33* 1.299	*9* 0.354	*1* 0.039	3.5 0.137	*130* 5.118	*10* 0.393	*1.6* 0.062	*60* 2.362
318M	*210x5x40*	*190* g6 -0.0006 -0.0017 7.480	*194* 7.638		*212* g6 -0.0006 -0.0017 8.346	*194* 7.638	*212* 8.346	*27* 1.062	*133* 5.236	*20* 0.787	*134* 5.275	*45* 1.771	*9* 0.354	*2* 0.078	*3* 0.118	-	-	*3* 0.118	*60* 2.362
319	*260x5x50*	*248* g6 -0.0006 -0.0017 9.764	*243* 9.567		*265* g6 -0.0007 -0.0019 10.433	*243* 9.567	*265* 10.433	*29* 1.141	*144* 5.669	*20* 0.787	*145* 5.708	*40* 1.574	*11* 0.433	*2* 0.078	*3* 0.118	-	-	*3* 0.118	*60* 2.362
321	*300x8x36*	*282* g6 -0.0007 -0.0019 11.102	*281* 11.063		*305* g6 -0.0007 -0.0019 12.008	*281* 11.063	*305* 12.008	*25* 0.984	*158* 6.22	*25* 0.984	*159* 6.259	*50* 1.968	*12* 0.472	*2* 0.078	*3* 0.118	-	-	*3* 0.118	*70* 2.755
323	*400x8x48*	*360* g6 -0.0007 -0.0021 14.173	*381* 15.000		*405* g6 -0.0008 -0.0024 15.945	*381* 15.000	*405* 15.945	*35* 1.377	*254* 10	*26* 1.023	*256* 10.078	*53.5* 2.106	*12* 0.472	*2* 0.078	*4* 0.157	-	-	*5* 0.196	*70* 2.755
325	*450x8x55*	*410* g6 -0.0008 -0.0024 16.142	*431* 16.969		*455* g6 -0.0008 -0.0024 17.913	*431* 16.969	*455* 17.913	*34* 1.338	*272* 10.708	*24* 0.944	*274* 10.787	*66* 2.598	*12* 0.472	*2* 0.078	*4* 0.157	-	-	*5* 0.196	*70* 2.755

* Max cutter diameter

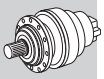

TORQUE ARM

	L1 [*mm* / in]	L2 [*mm* / in]
300	*300* / 11.811	*450* / 17.716
301	*580* / 22.834	
303	*350* / 13.779	*500* / 19.685
304		
305	*370* / 14.566	
306	*410* / 16.141	*600* / 23.622
307	*490* / 19.291	*700* / 27.559
309	*600* / 23.622	*900* / 35.433
310M	*1030* / 40.551	*1000* / 39.37
311M	*800* / 31.496	*1100* / 43.307
313M	*900* / 35.433	*1200* / 47.244
314M	*1100 / 43.307*	*1400* / 55.118
315M		
316M	*1280 / 50.393*	*1500* / 59.055
317M	*1300* / 51.181	*1600* / 62.992
318M	*1900* / 74.803	*1800* / 70.866
319	*1500* / 59.055	*2000* / 78.74
321	*1500* / 59.055	
323	*1750* / 68.897	*3000* / 118.11
325	*2050* / 80.708	*3200* / 125.984

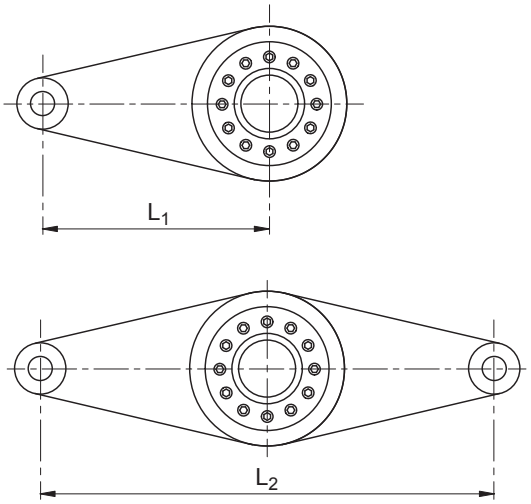

NOTE: Drawings for illustration purpose only

Suggested material: S275JR - UNI EN 10025 or S355JR - UNI EN 10025.

TORQUE ARM KIT FOR FP VERSIONS

If requested, it's possible to install a specific "Torque arm" Kit on 300 series geraboxes. For detailed information please contact our Technical Service .

	L1 [*mm* / in]	i [*mm* / in]
300	*300* / 11.811	*55* / 2.165
301	*580* / 22.834	
303	*350* / 13.779	*80* / 3.149
304		
305	*370* / 14.566	
306	*410* / 16.141	*115* / 4.527
307	*490* / 19.291	
309	*600* / 23.622	
310M	*1030* / 40.551	*135* / 5.314
311M	*800* / 31.496	*155* / 6.102
313M	*900* / 35.433	*160* / 6.299
314M	*1100* / 43.307	*200* / 7.874
315M		
316M	*1280* / 50.393	*210* / 8.267
317M	*1300* / 51.181	*240* / 9.448
318M	*1900* / 74.803	*280* / 11.023
319	*1500* / 59.055	*320* / 12.598
321	*1500* / 59.055	*360* / 14.173
323	*1750* / 68.897	*400* / 15.748
325	*2050* / 80.708	*440* / 17.322

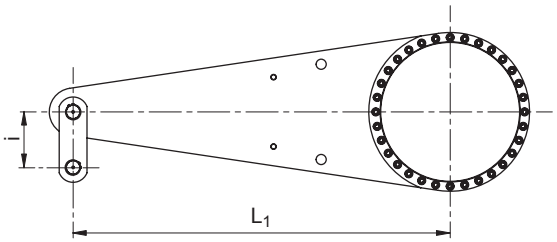

NOTE: Draw for illustration purpose only

Suggested material: S275JR - UNI EN 10025 or S355JR - UNI EN 10025.

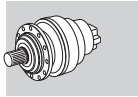

H1 SYMBOLS AND UNITS OF MEASURE

Symbols	Units of Measure	Description
V	[cm³]	Rot. displacement
p	[bar]	Pressure
pA. pB	[bar]	Pressure in A and B connections
Q	[l/min]	Flow rate
ηt		Efficiency
ηmh		Hydraulic-mechanical efficiency

Symbols	Units of Measure	Description
ηv		Volumetric efficiency
n	[rpm]	Angular speed
T	[lb•in]	Actual torque onto the motor shaft
cont		General value, for continuous duty
int		General value, intermittent duty

H2 NEGATIVE MULTIDISC BRAKE

DESCRIPTION

TRASMITAL's fail-safe parking brake is an oil immersed multidisc unit on the input side of the gearbox. The brake is operated when there is no hydraulic pressure and is released when the minimum release pressure is applied.
Use of parking brake is necessary whenever the driven system must be kept at standstill even under external forces and/or torques.

Applications:

- winches
- slewing drives
- parking brake on mobile equipment
- general industrial applications

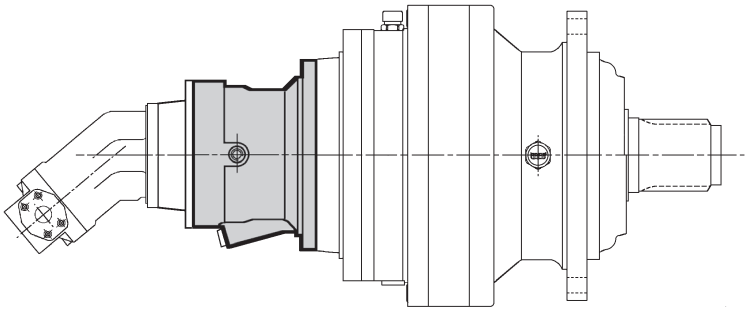

H2.1 Brake technical data

(A 22)

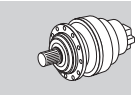

		Type																	
		4.							5.					6.					
		A	B	D	F	H	K	L	B	C	E	G	K	B	C	E	G	K	L
Static braking torque Tb	Nm ±10%	50	100	160	260	330	400	440	400	500	630	800	1000	900	1200	1600	2200	2750	3300
Min. opening pressure	bar	10	20	30	20	25	30	34	20	27	20	26	32	16	21	28	21	27	32
Max. operating pressure	bar	320																	
Oil volume for brake release	cm^3	6.65	6.65	6.65	6.65	6.65	6.65	6.65	13.96	13.96	13.96	13.96	13.96	37.2	37.2	37.2	37.2	37.2	37.2

H3 INPUTS FOR HYDRAULIC MOTORS

The available motor adaptors and motor sizes are shown in the following pages.
The standard orientations (A) of the motor flanges are shown in the following scheme, taking into consideration the input side of the gearbox.

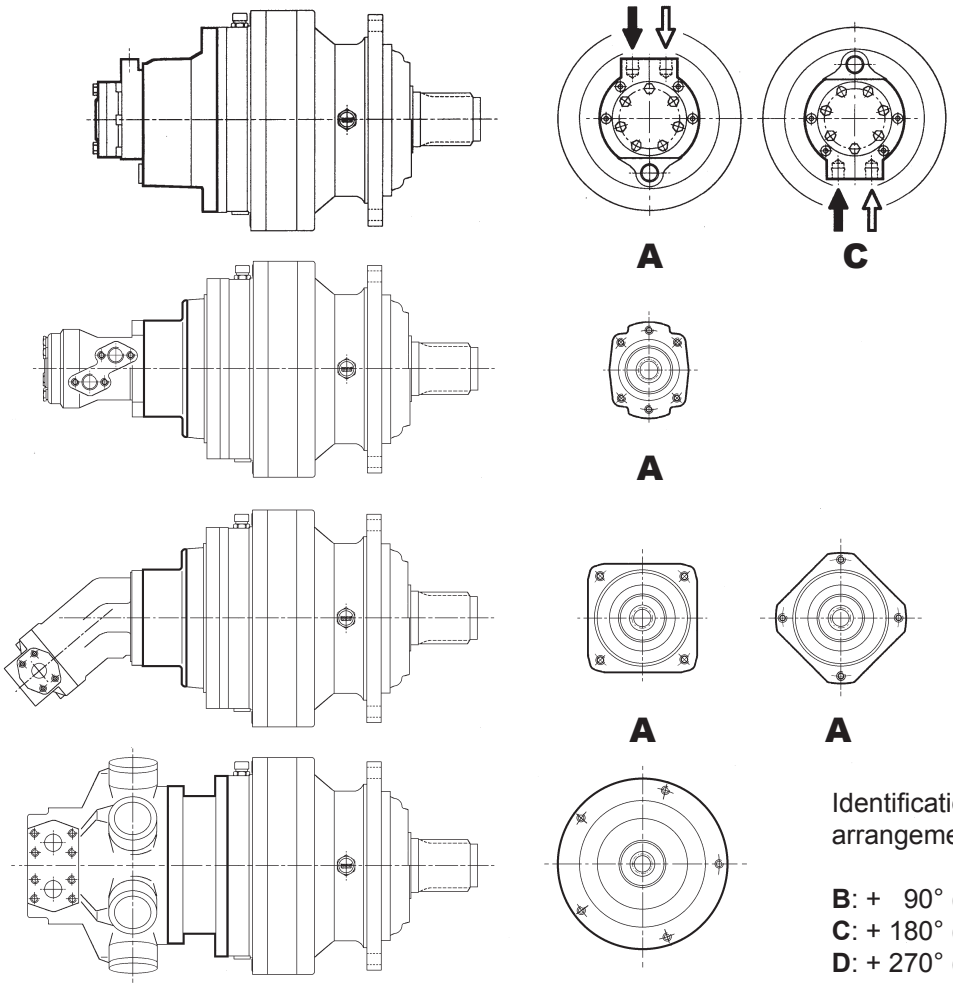

Identification codes of other arrangements:

B: + 90° (clockwise)
C: + 180° (clockwise)
D: + 270° (clockwise)

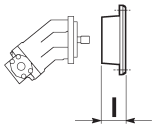

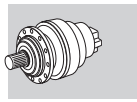

	CODE	SAE Standard J744c											
		SAE A 16/32 z9	SAE A ø15,875	SAE B 16/32 z13	SAE B ø22,2	SAE BB 16/32 z15	SAE BB ø25,4	SAE C 12/24 z14	SAE C ø31,7	SAE CC 12/24 z17	SAE C ø38,1	SAE D 8/16 z13	SAE E 8/16 z13
		S5AM	S5AN	S5BA	S5BB	S5BM	S5BN	S5CA	S5CB	S5CP	S5CQ	S5DA	S5EA
		l											
300	L1-L2-L3-L4	42	42	52	52	52	52	64	64	80	80	81	
	R2-R3-R4	42	42	52	52	52	52	64	64	80	80	81	
301	L1-L2-L3-L4	42	42	52	52	52	52	64	64	80	80	81	
	R2-R3-R4	42	42	52	52	52	52	64	64	80	80	81	
303	L1	42	42	52	52	52	52	64	64	80	80	81	
	L2-L3-L4	42	42	52	52	52	52	64	64	80	80	81	
	R2-R3-R4	42	42	52	52	52	52	64	64	80	80	81	
304	L1	42	42	52	52	52	52	64	64	80	80	81	
	L2-L3-L4	42	42	52	52	52	52	64	64	80	80	81	
	R2-R3-R4	42	42	52	52	52	52	64	64	80	80	81	
305	L1	42	42	52	52	52	52	64	64	80	80	81	
	L2-L3-L4	42	42	52	52	52	52	64	64	80	80	81	
	R2-R3-R4	42	42	52	52	52	52	64	64	80	80	81	
306	L1											101	113
	L2	42	42	52	52	52	52	64	64	80	80	81	
	L3-L4	42	42	52	52	52	52	64	64	80	80	81	
	R2-R3-R4	42	42	52	52	52	52	64	64	80	80	81	
307	L1											101	113
	L2	42	42	52	52	52	52	64	64	80	80	81	
	L3-L4	42	42	52	52	52	52	64	64	80	80	81	
	R2	42	42	52	52	52	52	64	64	80	80	81	
	R3-R4	42	42	52	52	52	52	64	64	80	80	81	
309	L1											101	113
	L2	42	42	52	52	52	52	64	64	80	80	81	
	L3-L4	42	42	52	52	52	52	64	64	80	80	81	
	R2	42	42	52	52	52	52	64	64	80	80	81	
	R3-R4	42	42	52	52	52	52	64	64	80	80	81	
310M	L1											146	158
	L2											101	113
	L3	42	42	52	52	52	52	64	64	80	80	81	
	L4	42	42	52	52	52	52	64	64	80	80	81	
	R2(B)-R2(C)											101	113
	R3-R4	42	42	52	52	52	52	64	64	80	80	81	
311M	L1												
	L2											101	113
	L3	42	42	52	52	52	52	64	64	80	80	81	
	L4	42	42	52	52	52	52	64	64	80	80	81	
	R2(B)-R2(C)											101	113
	R3-R4	42	42	52	52	52	52	64	64	80	80	81	
313M	L1												
	L2											101	113
	L3	42	42	52	52	52	52	64	64	80	80	81	
	L4	42	42	52	52	52	52	64	64	80	80	81	
	R2(B)-R2(C)											101	113
	R3-R4	42	42	52	52	52	52	64	64	80	80	81	
314M	L1												
	L2											146	113
	L3	42	42	52	52	52	52	64	64	80	80	81	
	L4	42	42	52	52	52	52	64	64	80	80	81	
	R3(B)-R3(C)											101	113
	R4	42	42	52	52	52	52	64	64	80	80	81	
315M	L1												
	L2												
	L3											101	113
	L4	42	42	52	52	52	52	64	64	80	80	81	
	R3(B)-R3(C)											101	113
	R4	42	42	52	52	52	52	64	64	80	80	81	
316M	L1												
	L2												
	L3											101	113
	L4	42	42	52	52	52	52	64	64	80	80	81	
	R3(B)-R3(C)											101	113
	R4	42	42	52	52	52	52	64	64	80	80	81	
317M	L1												
	L2												
	L3											101	113
	L4	42	42	52	52	52	52	64	64	80	80	81	
	R3(B)-R3(C)											101	113
	R4	42	42	52	52	52	52	64	64	80	80	81	
318M	L1												
	L2												
	L3												
	L4											101	113
	R4(B)-R4(C)											101	113
319	L1												
	L2												
	L3												
	L4											101	113
	R4(B)-R4(C)											101	113
321	L1												
	L2												
	L3												
	L4											101	113
	R4(B)-R4(C)											101	113
323	L1												
	L2												
	L3												
	L4												

* For gearboxes supplied with 6" brake

For gearboxes supplied without brake (SF)

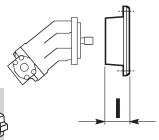

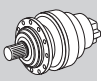

	CODE	CALZONI								CHAR-LYNN (EATON)								
		CALZONI MR190 N z8	CALZONI MR300 N z8	CALZONI MRP300 N z8	CALZONI MR450 N z8	CALZONI MR700 N z8	CALZONI MR1100 N z8	CALZONI MR1800 N z10	CALZONI MR2800 N z10	SERIE 2000 SAE A 1" 6B	SERIE 2000 SAE A ø25,4	SERIE 2000 SAE A ø32	SERIE 2000 SAE A 12/24 z14	SERIE 2000 BEARINGLESS 1 12/24 z12	SERIE 4000 SAE B ø31,75	SERIE 4000 SAE C 12/24 z17	SERIE 6000 SAE C ø38,1	SERIE 6000 SAE C 12/24 z17
		C0AA	C0AD	C0BL	C0AG	C0AL	C0AP	C0AS	C0AV	S5AQ	S5AS	D0AG	D0AH	E2AA	S5BP	S5CP	S5CQ	S5CP
		I								I								
300	L1-L2-L3-L4	64	78	78						42	42	64	64	52	68	80	80	80
	R2-R3-R4	64	78	78						42	42	64	64	52	68	80	80	80
301	L1-L2-L3-L4	64	78	78						42	42	64	64	52	68	80	80	80
	R2-R3-R4	64	78	78						42	42	64	64	52	68	80	80	80
303	L1	64	78	78						42	42	64	64	52	68	80	80	80
	L2-L3-L4	64	78	78						42	42	64	64	52	68	80	80	80
	R2-R3-R4	64	78	78						42	42	64	64	52	68	80	80	80
304	L1	64	78	78						42	42	64	64	52	68	80	80	80
	L2-L3-L4	64	78	78						42	42	64	64	52	68	80	80	80
	R2-R3-R4	64	78	78						42	42	64	64	52	68	80	80	80
305	L1	64	78	78						42	42	64	64	52	68	80	80	80
	L2-L3-L4	64	78	78						42	42	64	64	52	68	80	80	80
	R2-R3-R4	64	78	78						42	42	64	64	52	68	80	80	80
306	L1				98	102	133											
	L2	64	78	78						42	42	64	64	52	68	80	80	80
	L3-L4	64	78	78						42	42	64	64	52	68	80	80	80
	R2-R3-R4	64	78	78						42	42	64	64	52	68	80	80	80
307	L1				98	102	133											
	L2	64	78	78						42	42	64	64	52	68	80	80	80
	L3-L4	64	78	78						42	42	64	64	52	68	80	80	80
	R2	64	78	78						42	42	64	64	52	68	80	80	80
	R3-R4	64	78	78						42	42	64	64	52	68	80	80	80
309	L1				98	102	133											
	L2	64	78	78						42	42	64	64	52	68	80	80	80
	L3-L4	64	78	78						42	42	64	64	52	68	80	80	80
	R2	64	78	78						42	42	64	64	52	68	80	80	80
	R3-R4	64	78	78						42	42	64	64	52	68	80	80	80
310M	L1				143	147	178											
	L2				98	102	133											
	L3	64	78	78						42	42	64	64	52	68	80	80	80
	L4	64	78	78						42	42	64	64	52	68	80	80	80
	R2(B)-R2(C)				98	102	133											
	R3-R4	64	78	78						42	42	64	64	52	68	80	80	80
311M	L1					130	130	165	200									
	L2				98	102	133											
	L3	64	78	78						42	42	64	64	52	68	80	80	80
	L4	64	78	78						42	42	64	64	52	68	80	80	80
	R2(B)-R2(C)				98	102	133											
	R3-R4	64	78	78						42	42	64	64	52	68	80	80	80
313M	L1					130	130	165	200									
	L2				98	102	133											
	L3	64	78	78						42	42	64	64	52	68	80	80	80
	L4	64	78	78						42	42	64	64	52	68	80	80	80
	R2(B)-R2(C)				98	102	133											
	R3-R4	64	78	78						42	42	64	64	52	68	80	80	80
314M	L1																	
	L2				98	102	133											
	L3	64	78	78						42	42	64	64	52	68	80	80	80
	L4	64	78	78						42	42	64	64	52	68	80	80	80
	R3(B)-R3(C)				98	102	133											
	R4	64	78	78						42	42	64	64	52	68	80	80	80
315M	L1																	
	L2					130	130	165	200									
	L3				98	102	133											
	L4	64	78	78						42	42	64	64	52	68	80	80	80
	R3(B)-R3(C)				98	102	133											
	R4	64	78	78						42	42	64	64	52	68	80	80	80
316M	L1																	
	L2					130	130	165	200									
	L3				98	102	133											
	L4	64	78	78						42	42	64	64	52	68	80	80	80
	R3(B)-R3(C)				98	102	133											
	R4	64	78	78						42	42	64	64	52	68	80	80	80
317M	L1																	
	L2					130	130	165	200									
	L3				98	102	133											
	L4	64	78	78						42	42	64	64	52	68	80	80	80
	R3(B)-R3(C)				98	102	133											
	R4	64	78	78						42	42	64	64	52	68	80	80	80
318M	L1																	
	L2																	
	L3					130#/102*	130#/133*	165#	200#									
	L4				98	102	133											
	R4(B)-R4(C)				98	102	133											
319	L1																	
	L2																	
	L3					130	130	165	200									
	L4				98	102	133											
	R4(B)-R4(C)				98	102	133											
321	L1																	
	L2																	
	L3					130	130	165	200									
	L4				98	102	133											
	R4(B)-R4(C)				98	102	133											
323	L1																	
	L2																	
	L3																	
	L4					130#/102*	130#/133*	165#	200#									

* For gearboxes supplied with 6" brake # For gearboxes supplied without brake (SF)

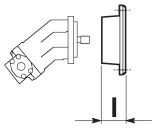

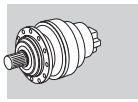

	CODE	SAUER DANFOSS (orbit)									DENISON Hydraulics							
		OMP-OMR 50/315 ø25	OMP-OMR 50/315 SAE 1" 6B	OMS 80/315 ø32	OMS 80/315 12/24 z14	OMSS 80/315 12/24 z12	OMT 160/400 ø40	OMT 160/400 12/24 z17	OMTS 160/400 12/24 z16	OMVS 315/800 10/20 z16	M6-M7-M8 *3** 12/24 z14	M11-M14 *3** 8/16 z13	M3 B 16/32 z9	M4C-M4SC 16/32 z13	M4D-M4SD 12/24 z14	M4DC-M4S DC 12/24 z14	M4E-M4SE 12/24 z14	M5BS 16/32 z13
		S5AP	S5AQ	D0AG	D0AH	D0AL	D0AM	D0AN	D0AQ	D0AU	S5CA	S5EA	S5AM	S5BA	S5CA	S5CA	S5CA	S5BA
		I																
300	L1-L2-L3-L4	42	42	64	64	37	112	112	57		64		42	52	64	64	64	52
	R2-R3-R4	42	42	64	64	37	112	112	57		64		42	52	64	64	64	52
301	L1-L2-L3-L4	42	42	64	64	37	112	112	57		64		42	52	64	64	64	52
	R2-R3-R4	42	42	64	64	37	112	112	57		64		42	52	64	64	64	52
303	L1	42	42	64	64	37	112	112	57		64		42	52	64	64	64	52
	L2-L3-L4	42	42	64	64	37	112	112	57		64		42	52	64	64	64	52
	R2-R3-R4	42	42	64	64	37	112	112	57		64		42	52	64	64	64	52
304	L1	42	42	64	64	37	112	112	57		64		42	52	64	64	64	52
	L2-L3-L4	42	42	64	64	37	112	112	57		64		42	52	64	64	64	52
	R2-R3-R4	42	42	64	64	37	112	112	57		64		42	52	64	64	64	52
305	L1	42	42	64	64	37	112	112	57		64		42	52	64	64	64	52
	L2-L3-L4	42	42	64	64	37	112	112	57		64		42	52	64	64	64	52
	R2-R3-R4	42	42	64	64	37	112	112	57		64		42	52	64	64	64	52
306	L1									70		113						
	L2	42	42	64	64	37	112	112	57		64		42	52	64	64	64	52
	L3-L4	42	42	64	64	37	112	112	57		64		42	52	64	64	64	52
	R2-R3-R4	42	42	64	64	37	112	112	57		64		42	52	64	64	64	52
307	L1									70		113						
	L2	42	42	64	64	37	112	112	57		64		42	52	64	64	64	52
	L3-L4	42	42	64	64	37	112	112	57		64		42	52	64	64	64	52
	R2	42	42	64	64	37	112	112	57		64		42	52	64	64	64	52
	R3-R4	42	42	64	64	37	112	112	57		64		42	52	64	64	64	52
309	L1									70		113						
	L2	42	42	64	64	37	112	112	57		64		42	52	64	64	64	52
	L3-L4	42	42	64	64	37	112	112	57		64		42	52	64	64	64	52
	R2	42	42	64	64	37	112	112	57		64		42	52	64	64	64	52
	R3-R4	42	42	64	64	37	112	112	57		64		42	52	64	64	64	52
310M	L1									115		158						
	L2									70		113						
	L3	42	42	64	64	37	112	112	57		64		42	52	64	64	64	52
	L4	42	42	64	64	37	112	112	57		64		42	52	64	64	64	52
	R2(B)-R2(C)									70		113						
	R3-R4	42	42	64	64	37	112	112	57		64		42	52	64	64	64	52
311M	L1																	
	L2									70		113						
	L3	42	42	64	64	37	112	112	57		64		42	52	64	64	64	52
	L4	42	42	64	64	37	112	112	57		64		42	52	64	64	64	52
	R2(B)-R2(C)									70		113						
	R3-R4	42	42	64	64	37	112	112	57		64		42	52	64	64	64	52
313M	L1																	
	L2									70		113						
	L3	42	42	64	64	37	112	112	57		64		42	52	64	64	64	52
	L4	42	42	64	64	37	112	112	57		64		42	52	64	64	64	52
	R2(B)-R2(C)									70		113						
	R3-R4	42	42	64	64	37	112	112	57		64		42	52	64	64	64	52
314M	L1																	
	L2									70		113						
	L3	42	42	64	64	37		112	57		64		42	52	64	64	64	52
	L4	42	42	64	64	37	112	112	57		64		42	52	64	64	64	52
	R3(B)-R3(C)									70		113						
	R4	42	42	64	64	37	112	112	57		64		42	52	64	64	64	52
315M	L1																	
	L2																	
	L3									70		113						
	L4	42	42	64	64	37	112	112	57		64		42	52	64	64	64	52
	R3(B)-R3(C)									70		113						
	R4	42	42	64	64	37	112	112	57		64		42	52	64	64	64	52
316M	L1																	
	L2																	
	L3									70		113						
	L4	42	42	64	64	37	112	112	57		64		42	52	64	64	64	52
	R3(B)-R3(C)									70		113						
	R4	42	42	64	64	37	112	112	57		64		42	52	64	64	64	52
317M	L1																	
	L2																	
	L3									70		113						
	L4	42	42	64	64	37	112	112	57		64		42	52	64	64	64	52
	R3(B)-R3(C)									70		113						
	R4	42	42	64	64	37	112	112	57		64		42	52	64	64	64	52
318M	L1																	
	L2																	
	L3																	
	L4									70		113						
	R4(B)-R4(C)									70		113						
319	L1																	
	L2																	
	L3																	
	L4									70		113						
	R4(B)-R4(C)									70		113						
321	L1																	
	L2																	
	L3																	
	L4									70		113						
	R4(B)-R4(C)									70		113						
323	L1																	
	L2																	
	L3																	
	L4																	

* For gearboxes supplied with 6" brake # For gearboxes supplied without brake (SF)

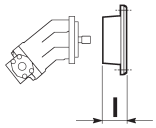

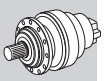

	CODE	LINDE							
		MMF 43 16/32 z15	MMF 63 12/24 z14	HMF 28-35-02 16/32 z15	HMF 50-02 16/32 z21	HMF-HMV 75-02 16/32 z21	HMF-HMV 105-02 16/32 z23	HMF-HMV 135-02 16/32 z27	BMF-BMV 186 50x2 Z24
		S5BM	S5CA	S5BM	S5CE	S5CE	S5CD	S5DC	I5AF
		I							
300	L1-L2-L3-L4	52	64	52	64	64	64	81	
	R2-R3-R4	52	64	52	64	64	64	81	
301	L1-L2-L3-L4	52	64	52	64	64	64	81	
	R2-R3-R4	52	64	52	64	64	64	81	
303	L1	52	64	52	64	64	64	81	
	L2-L3-L4	52	64	52	64	64	64	81	
	R2-R3-R4	52	64	52	64	64	64	81	
304	L1	52	64	52	64	64	64	81	
	L2-L3-L4	52	64	52	64	64	64	81	
	R2-R3-R4	52	64	52	64	64	64	81	
305	L1	52	64	52	64	64	64	81	
	L2-L3-L4	52	64	52	64	64	64	81	
	R2-R3-R4	52	64	52	64	64	64	81	
306	L1							101	121
	L2	52	64	52	64	64	64	81	
	L3-L4	52	64	52	64	64	64	81	
	R2-R3-R4	52	64	52	64	64	64	81	
307	L1							101	121
	L2	52	64	52	64	64	64	81	
	L3-L4	52	64	52	64	64	64	81	
	R2	52	64	52	64	64	64	81	
	R3-R4	52	64	52	64	64	64	81	
309	L1							101	121
	L2	52	64	52	64	64	64	81	
	L3-L4	52	64	52	64	64	64	81	
	R2	52	64	52	64	64	64	81	
	R3-R4	52	64	52	64	64	64	81	
310M	L1							146	166
	L2							101	121
	L3	52	64	52	64	64	64	81	
	L4	52	64	52	64	64	64	81	
	R2(B)-R2(C)							101	121
	R3-R4	52	64	52	64	64	64	81	
311M	L1								
	L2							101	121
	L3	52	64	52	64	64	64	81	
	L4	52	64	52	64	64	64	81	
	R2(B)-R2(C)							101	121
	R3-R4	52	64	52	64	64	64	81	
313M	L1								
	L2							101	121
	L3	52	64	52	64	64	64	81	
	L4	52	64	52	64	64	64	81	
	R2(B)-R2(C)							101	121
	R3-R4	52	64	52	64	64	64	81	
314M	L1								
	L2							101	121
	L3	52	64	52	64	64	64	81	
	L4	52	64	52	64	64	64	81	
	R3(B)-R3(C)							101	121
	R4	52	64	52	64	64	64	81	
315M	L1								
	L2								
	L3							101	121
	L4	52	64	52	64	64	64	81	
	R3(B)-R3(C)							101	121
	R4	52	64	52	64	64	64	81	
316M	L1								
	L2								
	L3							101	121
	L4	52	64	52	64	64	64	81	
	R3(B)-R3(C)							101	121
	R4	52	64	52	64	64	64	81	
317M	L1								
	L2								
	L3							101	121
	L4	52	64	52	64	64	64	81	
	R3(B)-R3(C)							101	121
	R4	52	64	52	64	64	64	81	
318M	L1								
	L2								
	L3								
	L4							101	121
	R4(B)-R4(C)							101	121
319	L1								
	L2								
	L3								
	L4							101	121
	R4(B)-R4(C)							101	121
321	L1								
	L2								
	L3								
	L4							101	121
	R4(B)-R4(C)							101	121
323	L1								
	L2								
	L3								
	L4								

* For gearboxes supplied with 6" brake # For gearboxes supplied without brake (SF)

Bonfiglioli Riduttori

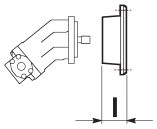

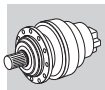

		BRUENINGHAUS HYDROMATIK (BOSCH REXROTH)															
		A2FM10-12-16 25x1,25 z18	A2FM23-28-32 A6VM 28 30x2 z14	A2FM23-28 ø25	A2FM45 32x2 z14	A2FM45-56 30x2 z14	A2FM56-63 A6VM55 35x2 z16	A2FM80-90 A6VM80 40x2 z18	A2FM80 35x2 z16	A2FM107-125 A6VM107 45x2 z21	A2FM107 A6VM107 40x2 z18	A2FM160-180 A6VM160 50x2 z24	A2FM160 A6VM160 45x2 z21	A2FM200 A6VM200 50x2 z24	A6VM250 50x2 z24	A2FM250 50x2 z24	A10FM45 30W A10VM63 16/32 z15
		H0AA	H0AE	H0AH	H0AI	H0BA	H0BC	H0BG	H0BI	H0CA	H0CC	H0CE	H0CG	H0CI	H0DA	H0DE	S5BM
	CODE									I							
300	L1-L2-L3-L4	42	52	52	64	64	64	75	75	101	101		101				52
	R2-R3-R4	42	52	52	64	64	64	75	75	101	101		101				52
301	L1-L2-L3-L4	42	52	52	64	64	64	75	75	101	101		101				52
	R2-R3-R4	42	52	52	64	64	64	75	75	101	101		101				52
303	L1	42	52	52	64	64	64	75	75	101	101		101				52
	L2-L3-L4	42	52	52	64	64	64	75	75	101	101		101				52
	R2-R3-R4	42	52	52	64	64	64	75	75	101	101		101				52
304	L1	42	52	52	64	64	64	75	75	101	101		101				52
	L2-L3-L4	42	52	52	64	64	64	75	75	101	101		101				52
	R2-R3-R4	42	52	52	64	64	64	75	75	101	101		101				52
305	L1	42	52	52	64	64	64	75	75	101	101		101				52
	L2-L3-L4	42	52	52	64	64	64	75	75	101	101		101				52
	R2-R3-R4	42	52	52	64	64	64	75	75	101	101		101				52
306	L1											101	101	101	113	113	
	L2	42	52	52	64	64	64	75	75	101	101		101				52
	L3-L4	42	52	52	64	64	64	75	75	101	101		101				52
	R2-R3-R4	42	52	52	64	64	64	75	75	101	101		101				52
307	L1											101	101	101	113	113	
	L2	42	52	52	64	64	64	75	75	101	101		101				52
	L3-L4	42	52	52	64	64	64	75	75	101	101		101				52
	R2	42	52	52	64	64	64	75	75	101	101		101				52
	R3-R4	42	52	52	64	64	64	75	75	101	101		101				52
309	L1											101	101	101	113	113	
	L2	42	52	52	64	64	64	75	75	101	101		101				52
	L3-L4	42	52	52	64	64	64	75	75	101	101		101				52
	R2	42	52	52	64	64	64	75	75	101	101		101				52
	R3-R4	42	52	52	64	64	64	75	75	101	101		101				52
310M	L1											146	146	146	158	158	
	L2											101	101	101	113	113	
	L3	42	52	52	64	64	64	75	75	101	101		101				52
	L4	42	52	52	64	64	64	75	75	101	101		101				52
	R2(B)-R2(C)											101	101	101	113	113	
	R3-R4	42	52	52	64	64	64	75	75	101	101		101				52
311M	L1																
	L2											101	101	101	113	113	
	L3	42	52	52	64	64	64	75	75	101	101		101				52
	L4	42	52	52	64	64	64	75	75	101	101		101				52
	R2(B)-R2(C)											101	101	101	113	113	
	R3-R4	42	52	52	64	64	64	75	75	101	101		101				52
313M	L1																
	L2											101	101	101	113	113	
	L3	42	52	52	64	64	64	75	75	101	101		101				52
	L4	42	52	52	64	64	64	75	75	101	101		101				52
	R2(B)-R2(C)											101	101	101	113	113	
	R3-R4	42	52	52	64	64	64	75	75	101	101		101				52
314M	L1																
	L2											101	101	101	113	113	
	L3	42	52	52	64	64	64	75	75	101	101		101		113		52
	L4	42	52	52	64	64	64	75	75	101	101		101				52
	R3(B)-R3(C)											101	101	101	113	113	
	R4	42	52	52	64	64	64	75	75	101	101		101				52
315M	L1																
	L2																
	L3											101	101	101	113	113	
	L4	42	52	52	64	64	64	75	75	101	101		101				52
	R3(B)-R3(C)											101	101	101	113	113	
	R4	42	52	52	64	64	64	75	75	101	101		101				52
316M	L1																
	L2																
	L3											101	101	101	113	113	
	L4	42	52	52	64	64	64	75	75	101	101		101				52
	R3(B)-R3(C)											101	101	101	113	113	
	R4	42	52	52	64	64	64	75	75	101	101		101				52
317M	L1																
	L2																
	L3											101	101	101	113	113	
	L4	42	52	52	64	64	64	75	75	101	101		101				52
	R3(B)-R3(C)											101	101	101	113	113	
	R4	42	52	52	64	64	64	75	75	101	101		101				52
318M	L1																
	L2																
	L3																
	L4											101	101	101	113	113	
	R4(B)-R4(C)											101	101	101	113	113	
319	L1																
	L2																
	L3																
	L4											101	101	101	113	113	
	R4(B)-R4(C)											101	101	101	113	113	
321	L1																
	L2																
	L3																
	L4											101	101	101	113	113	
	R4(B)-R4(C)											101	101	101	113	113	
323	L1																
	L2																
	L3																
	L4																

* For gearboxes supplied with 6" brake # For gearboxes supplied without brake (SF)

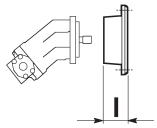

	CODE	SAI							KAWASAKI STAFFA	
		GM05 UNI 8953	GM1 UNI 8953	GM1/P1/S1 35x2 z16	GM2 UNI 8953	GM3 UNI 8953	GM4/GM5 UNI 8953	SAI L7 (9) N80x3 z25	B030 z17	B045 z17
		S2BA	S2AB	S2CE	S2AF	S2DN	S2BF	S2BH	S1AB	S1AC
		I								
300	L1-L2-L3-L4	73	37	57						
	R2-R3-R4	73	37	57						
301	L1-L2-L3-L4	73	37	57						
	R2-R3-R4	73	37	57						
303	L1	73	37	57						
	L2-L3-L4	73	37	57						
	R2-R3-R4	73	37	57						
304	L1	73	37	57						
	L2-L3-L4	73	37	57						
	R2-R3-R4	73	37	57						
305	L1	73	37	57						
	L2-L3-L4	73	37	57						
	R2-R3-R4	73	37	57						
306	L1		74		98	98	105		135	140
	L2	73	37	57						
	L3-L4	73	37	57						
	R2-R3-R4	73	37	57						
307	L1		74		98	98	105		135	140
	L2	73	37	57						
	L3-L4	73	37	57						
	R2	73	37	57						
	R3-R4	73	37	57						
309	L1		74		98	98	105		135	140
	L2	73	37	57						
	L3-L4	73	37	57						
	R2	73	37	57						
	R3-R4	73	37	57						
310M	L1		119		143	143	156		180	185
	L2		74		98	98	105		135	140
	L3	73	37	57						
	L4	73	37	57						
	R2(B)-R2(C)		74		98	98	105		135	140
	R3-R4	73	37	57						
311M	L1				149		156	90		
	L2		74		98	98	105		135	140
	L3	73	37	57						
	L4	73	37	57						
	R2(B)-R2(C)		74		98	98	105		135	140
	R3-R4	73	37	57						
313M	L1				149		156	90		
	L2		74		98	98	105		135	140
	L3	73	37	57						
	L4	73	37	57						
	R2(B)-R2(C)		74		98	98	105		135	140
	R3-R4	73	37	57						
314M	L1									
	L2		74		98	98	105		135	140
	L3	73	37	57						
	L4	73	37	57						
	R3(B)-R3(C)		74		98	98	105		135	140
	R4	73	37	57						
315M	L1									
	L2				149		156	90		
	L3		74		98	98	105		135	140
	L4	73	37	57						
	R3(B)-R3(C)		74		98	98	105		135	140
	R4	73	37	57						
316M	L1									
	L2				149		156	90		
	L3		74		98	98	105		135	140
	L4	73	37	57						
	R3(B)-R3(C)		74		98	98	105		135	140
	R4	73	37	57						
317M	L1									
	L2				149		156	90		
	L3		74		98	98	105		135	140
	L4	73	37	57						
	R3(B)-R3(C)		74		98	98	105		135	140
	R4	73	37	57						
318M	L1									
	L2									
	L3				149#/98*		156#/105*	90#		
	L4		74		98	98	105		135	140
	R4(B)-R4(C)		74		98	98	105		135	140
319	L1									
	L2									
	L3				149		156	90		
	L4		74		98	98	105		135	140
	R4(B)-R4(C)		74		98	98	105		135	140
321	L1									
	L2									
	L3				149		156	90		
	L4		74		98	98	105		135	140
	R4(B)-R4(C)		74		98	98	105		135	140
323	L1									
	L2									
	L3									
	L4				149#/98*		156#/105*	90#		

* For gearboxes supplied with 6" brake # For gearboxes supplied without brake (SF)

Bonfiglioli Riduttori

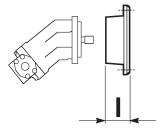

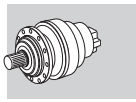

		SAUER DANFOSS (piston)														
		OMF-SMF-OMV -SMV 1-038 16/32 z13	SMF 2/033-052-070 16/32 z21	SMF 2/089 16/32 z23	SMF 2/119 16/32 z27	SMF 2/166-227 16/32 z27	SMF 4/023 90M042 16/32 z13	SMF 4/046 90M042 16/32 z15	90 M055 16/32 z21	90 M075-M100 16/32 z23	90 M130 16/32 z27	51 V 060 12/24 z14	51 V 080 12/24 z14	51 V 110 8/16 z13	51 V 160 8/16 z13	51 V 250 8/16 z15
		S5BA	S5CE	S5CD	S5DC	S5EC	S5BA	S5BM	S5CE	S5CD	S5DC	S5CA	S5CA	S5DA	S5DA	S5ED
	CODE								I							
300	L1-L2-L3-L4	52	64	64	81		52	52	64	64	81	64	64	81	81	
	R2-R3-R4	52	64	64	81		52	52	64	64	81	64	64	81	81	
301	L1-L2-L3-L4	52	64	64	81		52	52	64	64	81	64	64	81	81	
	R2-R3-R4	52	64	64	81		52	52	64	64	81	64	64	81	81	
303	L1	52	64	64	81		52	52	64	64	81	64	64	81	81	
	L2-L3-L4	52	64	64	81		52	52	64	64	81	64	64	81	81	
	R2-R3-R4	52	64	64	81		52	52	64	64	81	64	64	81	81	
304	L1	52	64	64	81		52	52	64	64	81	64	64	81	81	
	L2-L3-L4	52	64	64	81		52	52	64	64	81	64	64	81	81	
	R2-R3-R4	52	64	64	81		52	52	64	64	81	64	64	81	81	
305	L1	52	64	64	81		52	52	64	64	81	64	64	81	81	
	L2-L3-L4	52	64	64	81		52	52	64	64	81	64	64	81	81	
	R2-R3-R4	52	64	64	81		52	52	64	64	81	64	64	81	81	
306	L1				101	113					101			101	101	113
	L2	52	64	64	81		52	52	64	64	81	64	64	81	81	
	L3-L4	52	64	64	81		52	52	64	64	81	64	64	81	81	
	R2-R3-R4	52	64	64	81		52	52	64	64	81	64	64	81	81	
307	L1				101	113					101			101	101	113
	L2	52	64	64	81		52	52	64	64	81	64	64	81	81	
	L3-L4	52	64	64	81		52	52	64	64	81	64	64	81	81	
	R2	52	64	64	81		52	52	64	64	81	64	64	81	81	
	R3-R4	52	64	64	81		52	52	64	64	81	64	64	81	81	
309	L1				101	113					101			101	101	113
	L2	52	64	64	81		52	52	64	64	81	64	64	81	81	
	L3-L4	52	64	64	81		52	52	64	64	81	64	64	81	81	
	R2	52	64	64	81		52	52	64	64	81	64	64	81	81	
	R3-R4	52	64	64	81		52	52	64	64	81	64	64	81	81	
310M	L1				146	158					146			146	146	158
	L2				101	113					101			101	101	113
	L3	52	64	64	81		52	52	64	64	81	64	64	81	81	
	L4	52	64	64	81		52	52	64	64	81	64	64	81	81	
	R2(B)-R2(C)				101	113					101			101	101	113
	R3-R4	52	64	64	81		52	52	64	64	81	64	64	81	81	
311M	L1															
	L2				101	113					101			101	101	113
	L3	52	64	64	81		52	52	64	64	81	64	64	81	81	
	L4	52	64	64	81		52	52	64	64	81	64	64	81	81	
	R2(B)-R2(C)				101	113					101			101	101	113
	R3-R4	52	64	64	81		52	52	64	64	81	64	64	81	81	
313M	L1															
	L2				101	113					101			101	101	113
	L3	52	64	64	81		52	52	64	64	81	64	64	81	81	
	L4	52	64	64	81		52	52	64	64	81	64	64	81	81	
	R2(B)-R2(C)				101	113					101			101	101	113
	R3-R4	52	64	64	81		52	52	64	64	81	64	64	81	81	
314M	L1															
	L2				101	113					101			101	101	113
	L3	52	64	64	81		52	52	64	64	81	64	64	81	81	
	L4	52	64	64	81		52	52	64	64	81	64	64	81	81	
	R3(B)-R3(C)				101	113					101			101	101	113
	R4	52	64	64	81		52	52	64	64	81	64	64	81	81	
315M	L1															
	L2															
	L3				101	113					101			101	101	113
	L4	52	64	64	81		52	52	64	64	81	64	64	81	81	
	R3(B)-R3(C)				101	113					101			101	101	113
	R4	52	64	64	81		52	52	64	64	81	64	64	81	81	
316M	L1															
	L2															
	L3				101	113					101			101	101	113
	L4	52	64	64	81		52	52	64	64	81	64	64	81	81	
	R3(B)-R3(C)				101	113					101			101	101	113
	R4	52	64	64	81		52	52	64	64	81	64	64	81	81	
317M	L1															
	L2															
	L3				101	113					101			101	101	113
	L4	52	64	64	81		52	52	64	64	81	64	64	81	81	
	R3(B)-R3(C)				101	113					101			101	101	113
	R4	52	64	64	81		52	52	64	64	81	64	64	81	81	
318M	L1															
	L2															
	L3															
	L4				101	113					101			101	101	113
	R4(B)-R4(C)				101	113					101			101	101	113
319	L1															
	L2															
	L3															
	L4				101	113					101			101	101	113
	R4(B)-R4(C)				101	113					101			101	101	113
321	L1															
	L2															
	L3															
	L4				101	113					101			101	101	113
	R4(B)-R4(C)				101	113					101			101	101	113
323	L1															
	L2															
	L3															
	L4															

* For gearboxes supplied with 6" brake # For gearboxes supplied without brake (SF)

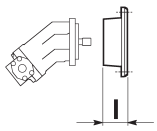

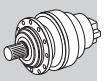

		TRW-TORQMOTOR (PARKER)					VICKERS (EATON)				WHITE				
		MAG 04-32 SAE 1" 6B	MAF 06-40 SAE 1" 6B	MAB 06-32 SAE 1" 6B	MAB 06-32 SAE A ø25	MAE 10-68 SAE 1" 6B	MFE 19 16/32 z15	25M**A11 16/32 z13	35-45 M**A11 12/24 z14	50 M**A11 8/16 z13	HS 02-15 SAE A ø25	HS 02-15 SAE A 1" 6B	RS 08-24 SAE A ø25	RS 08-24 SAE A 1" 6B	REO 06-45 SAE A 1" 6B
		S5AQ	S5AQ	S5AQ	S5AP	S5AQ	S5BM	S5BA	S5CA	S5DA	S5AP	S5AQ	S5AP	S5AQ	S5AP
	CODE	I													
300	L1-L2-L3-L4	42	42	42	42	42	52	52	64	81	42	42	42	42	42
	R2-R3-R4	42	42	42	42	42	52	52	64	81	42	42	42	42	42
301	L1-L2-L3-L4	42	42	42	42	42	52	52	64	81	42	42	42	42	42
	R2-R3-R4	42	42	42	42	42	52	52	64	81	42	42	42	42	42
303	L1	42	42	42	42	42	52	52	64	81	42	42	42	42	42
	L2-L3-L4	42	42	42	42	42	52	52	64	81	42	42	42	42	42
	R2-R3-R4	42	42	42	42	42	52	52	64	81	42	42	42	42	42
304	L1	42	42	42	42	42	52	52	64	81	42	42	42	42	42
	L2-L3-L4	42	42	42	42	42	52	52	64	81	42	42	42	42	42
	R2-R3-R4	42	42	42	42	42	52	52	64	81	42	42	42	42	42
305	L1	42	42	42	42	42	52	52	64	81	42	42	42	42	42
	L2-L3-L4	42	42	42	42	42	52	52	64	81	42	42	42	42	42
	R2-R3-R4	42	42	42	42	42	52	52	64	81	42	42	42	42	42
306	L1									101					
	L2	42	42	42	42	42	52	52	64	81	42	42	42	42	42
	L3-L4	42	42	42	42	42	52	52	64	81	42	42	42	42	42
	R2-R3-R4	42	42	42	42	42	52	52	64	81	42	42	42	42	42
307	L1									101					
	L2	42	42	42	42	42	52	52	64	81	42	42	42	42	42
	L3-L4	42	42	42	42	42	52	52	64	81	42	42	42	42	42
	R2	42	42	42	42	42	52	52	64	81	42	42	42	42	42
	R3-R4	42	42	42	42	42	52	52	64	81	42	42	42	42	42
309	L1									101					
	L2	42	42	42	42	42	52	52	64	81	42	42	42	42	42
	L3-L4	42	42	42	42	42	52	52	64	81	42	42	42	42	42
	R2	42	42	42	42	42	52	52	64	81	42	42	42	42	42
	R3-R4	42	42	42	42	42	52	52	64	81	42	42	42	42	42
310M	L1									146					
	L2									101					
	L3	42	42	42	42	42	52	52	64	81	42	42	42	42	42
	L4	42	42	42	42	42	52	52	64	81	42	42	42	42	42
	R2(B)-R2(C)									101					
	R3-R4	42	42	42	42	42	52	52	64	81	42	42	42	42	42
311M	L1														
	L2									101					
	L3	42	42	42	42	42	52	52	64	81	42	42	42	42	42
	L4	42	42	42	42	42	52	52	64	81	42	42	42	42	42
	R2(B)-R2(C)									101					
	R3-R4	42	42	42	42	42	52	52	64	81	42	42	42	42	42
313M	L1														
	L2									101					
	L3	42	42	42	42	42	52	52	64	81	42	42	42	42	42
	L4	42	42	42	42	42	52	52	64	81	42	42	42	42	42
	R2(B)-R2(C)									101					
	R3-R4	42	42	42	42	42	52	52	64	81	42	42	42	42	42
314M	L1														
	L2									101					
	L3	42	42	42	42	42	52	52	64	81	42	42	42	42	42
	L4	42	42	42	42	42	52	52	64	81	42	42	42	42	42
	R3(B)-R3(C)									101					
	R4	42	42	42	42	42	52	52	64	81	42	42	42	42	42
315M	L1														
	L2														
	L3									101					
	L4	42	42	42	42	42	52	52	64	81	42	42	42	42	42
	R3(B)-R3(C)									101					
	R4	42	42	42	42	42	52	52	64	81	42	42	42	42	42
316M	L1														
	L2														
	L3									101					
	L4	42	42	42	42	42	52	52	64	81	42	42	42	42	42
	R3(B)-R3(C)									101					
	R4	42	42	42	42	42	52	52	64	81	42	42	42	42	42
317M	L1														
	L2														
	L3									101					
	L4	42	42	42	42	42	52	52	64	81	42	42	42	42	42
	R3(B)-R3(C)									101					
	R4	42	42	42	42	42	52	52	64	81	42	42	42	42	42
318M	L1														
	L2														
	L3														
	L4									101					
	R4(B)-R4(C)									101					
319	L1														
	L2														
	L3														
	L4									101					
	R4(B)-R4(C)									101					
321	L1														
	L2														
	L3														
	L4									101					
	R4(B)-R4(C)									101					
323	L1														
	L2														
	L3														
	L4														

* For gearboxes supplied with 6" brake # For gearboxes supplied without brake (SF)

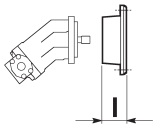

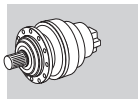

		VOAC (PARKER)																	
		F11-5 CK ø18	F11-10 CK ø20	F11-19 CK ø25	F11-19 CD 25x1,25 z18	F12-30 MF*I*D 30x2 z14	F12-40 MF*I*D 32x2 z14	F12-60 MF*I*D 35x2 z16	F12-80 MF*I*D 40x2 z18	F12-110 MF*I*D 45x2 z21	F11-150/250 S*S 8/16 z13	V12 060 I*D 35x2 z16	V12 060 S*S 12/24 z14	V12 080 N*D 40x2 z18	V12 080 S*S 12/24 z14	V12 110 I*D 45x2 z21	V12 110 S*S 8/16 z13	V12 160 S*S 8/16 z13	V12 160 N*C 45x2 z21
	CODE	V0AA	V0AC	V0AE	V0AG	H0AE	H0AI	H0BC	H0BG	H0CA	S5DA	H0BC	S5CA	H0BG	S5CA	H0CA	S5DA	S5DA	H0CG
		I																	
300	L1-L2-L3-L4	64	52	53	53	52	64	64	75	101	81	64	64	75	64	101	81	81	101
	R2-R3-R4	64	52	53	53	52	64	64	75	101	81	64	64	75	64	101	81	81	101
301	L1-L2-L3-L4	64	52	53	53	52	64	64	75	101	81	64	64	75	64	101	81	81	101
	R2-R3-R4	64	52	53	53	52	64	64	75	101	81	64	64	75	64	101	81	81	101
303	L1	64	52	53	53	52	64	64	75	101	81	64	64	75	64	101	81	81	101
	L2-L3-L4	64	52	53	53	52	64	64	75	101	81	64	64	75	64	101	81	81	101
	R2-R3-R4	64	52	53	53	52	64	64	75	101	81	64	64	75	64	101	81	81	101
304	L1	64	52	53	53	52	64	64	75	101	81	64	64	75	64	101	81	81	101
	L2-L3-L4	64	52	53	53	52	64	64	75	101	81	64	64	75	64	101	81	81	101
	R2-R3-R4	64	52	53	53	52	64	64	75	101	81	64	64	75	64	101	81	81	101
305	L1	64	52	53	53	52	64	64	75	101	81	64	64	75	64	101	81	81	101
	L2-L3-L4	64	52	53	53	52	64	64	75	101	81	64	64	75	64	101	81	81	101
	R2-R3-R4	64	52	53	53	52	64	64	75	101	81	64	64	75	64	101	81	81	101
306	L1										101						101	101	
	L2	64	52	53	53	52	64	64	75	101	81	64	64	75	64	101	81	81	101
	L3-L4	64	52	53	53	52	64	64	75	101	81	64	64	75	64	101	81	81	101
	R2-R3-R4	64	52	53	53	52	64	64	75	101	81	64	64	75	64	101	81	81	101
307	L1										101						101	101	
	L2	64	52	53	53	52	64	64	75	101	81	64	64	75	64	101	81	81	101
	L3-L4	64	52	53	53	52	64	64	75	101	81	64	64	75	64	101	81	81	101
	R2	64	52	53	53	52	64	64	75	101	81	64	64	75	64	101	81	81	101
	R3-R4	64	52	53	53	52	64	64	75	101	81	64	64	75	64	101	81	81	101
309	L1										101						101	101	
	L2	64	52	53	53	52	64	64	75	101	81	64	64	75	64	101	81	81	101
	L3-L4	64	52	53	53	52	64	64	75	101	81	64	64	75	64	101	81	81	101
	R2	64	52	53	53	52	64	64	75	101	81	64	64	75	64	101	81	81	101
	R3-R4	64	52	53	53	52	64	64	75	101	81	64	64	75	64	101	81	81	101
310M	L1										146						146	146	
	L2										101						101	101	
	L3	64	52	53	53	52	64	64	75	101	81	64	64	75	64	101	81	81	101
	L4	64	52	53	53	52	64	64	75	101	81	64	64	75	64	101	81	81	101
	R2(B)-R2(C)										101						101	101	
	R3-R4	64	52	53	53	52	64	64	75	101	81	64	64	75	64	101	81	81	101
311M	L1																		
	L2										101						101	101	
	L3	64	52	53	53	52	64	64	75	101	81	64	64	75	64	101	81	81	101
	L4	64	52	53	53	52	64	64	75	101	81	64	64	75	64	101	81	81	101
	R2(B)-R2(C)										101						101	101	
	R3-R4	64	52	53	53	52	64	64	75	101	81	64	64	75	64	101	81	81	101
313M	L1																		
	L2										101						101	101	
	L3	64	52	53	53	52	64	64	75	101	81	64	64	75	64	101	81	81	101
	L4	64	52	53	53	52	64	64	75	101	81	64	64	75	64	101	81	81	101
	R2(B)-R2(C)										101						101	101	
	R3-R4	64	52	53	53	52	64	64	75	101	81	64	64	75	64	101	81	81	101
314M	L1																		
	L2										101						101	101	
	L3	64	52	53	53	52	64	64	75	101	81	64	64	75	64	101	81	81	101
	L4	64	52	53	53	52	64	64	75	101	81	64	64	75	64	101	81	81	101
	R3(B)-R3(C)										101						101	101	
	R4	64	52	53	53	52	64	64	75	101	81	64	64	75	64	101	81	81	101
315M	L1																		
	L2																		
	L3										101						101	101	
	L4	64	52	53	53	52	64	64	75	101	81	64	64	75	64	101	81	81	101
	R3(B)-R3(C)										101						101	101	
	R4	64	52	53	53	52	64	64	75	101	81	64	64	75	64	101	81	81	101
316M	L1																		
	L2																		
	L3										101						101	101	
	L4	64	52	53	53	52	64	64	75	101	81	64	64	75	64	101	81	81	101
	R3(B)-R3(C)										101						101	101	
	R4	64	52	53	53	52	64	64	75	101	81	64	64	75	64	101	81	81	101
317M	L1																		
	L2																		
	L3										101						101	101	
	L4	64	52	53	53	52	64	64	75	101	81	64	64	75	64	101	81	81	101
	R3(B)-R3(C)										101						101	101	
	R4	64	52	53	53	52	64	64	75	101	81	64	64	75	64	101	81	81	101
318M	L1																		
	L2																		
	L3																		
	L4										101						101	101	
	R4(B)-R4(C)										101						101	101	
319	L1																		
	L2																		
	L3																		
	L4										101						101	101	
	R4(B)-R4(C)										101						101	101	
321	L1																		
	L2																		
	L3																		
	L4										101						101	101	
	R4(B)-R4(C)										101						101	101	
323	L1																		
	L2																		
	L3																		
	L4																		

* For gearboxes supplied with 6" brake # For gearboxes supplied without brake (SF)

H4 HYDRAULIC MOTORS

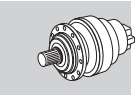

GENERAL FEATURES

Gearboxes belonging to the series 300M can be supplied complete with MG hydraulic motors manufactured by BONFIGLIOLI TRASMITAL. These motors were designed to provide compact and energy efficient gearmotors.
Before ordering, you should consult with the Technical Service Bonfiglioli.

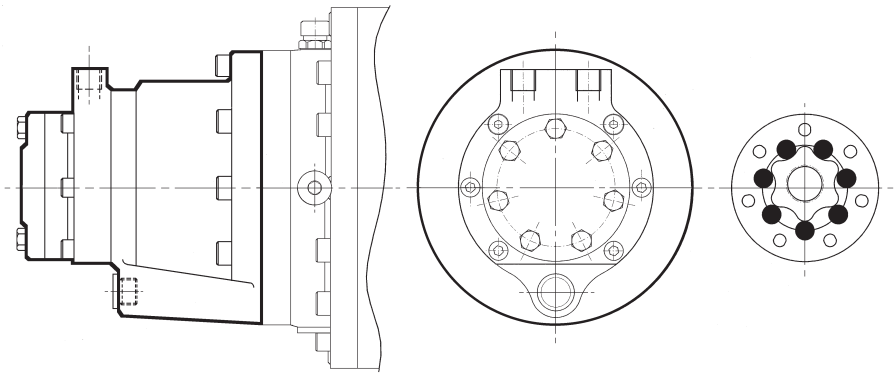

H4.1 MG hydraulic motors

Design characteristics:

- Orbit system with GEROLER® rollers between rotor and stator
- Distributor on output shaft
- Displacements from 50 to 250 cm^3
- Max. pressure 175 bar
- Max. flow rate 48 lt/min
- High efficiency
- Hydraulic brake can be included in the motor overall dimensions
- Inner brake directly controlled by the motor with no valves or outer circuits required.

H5 TECHNICAL FEATURES

H5.1 Displacement V [cm^3]

Geometrical volume produced as a result of each motor rotation corresponding to the theoretical volume of hydraulic oil necessary for a rotation of the driving shaft

H5.2 Pressure p [bar]

Hydraulic pressure applied to the motor when running.

H5.3 Flow rate Q [l / min]

Hydraulic oil flow through the motor when running.

H5.4 Efficiency η_t

Total efficiency of the hydraulic motor given by:

$$\eta_t = \eta mh \times \eta v \quad (38)$$

Bonfiglioli Riduttori

H5.5 Mechanical-hydraulic efficiency ηmh

This is the ratio of actual torque to theoretical torque at the driving shaft. Value depending on inner losses due to mechanical friction as well as hydraulic fluid pressure losses, calculated as follows:

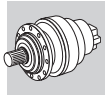

$$\eta mh = \frac{2\pi \times 10 \times T}{(pA - pB) \times V} \quad (39)$$

H5.6 Hydraulic efficiency ηv

This is the ratio of motor actual speed to motor theoretical speed. Value depending on the motor inner blow-by between high and low pressure volumes. This value is given by the following formula:

$$\eta v = \frac{n \times V}{Q \times 1000} \quad (40)$$

H5.7 Angular speed n [min^{-1}]

Hydraulic motor rotation speed. Value resulting from the following formula:

$$n = \frac{Q \times 1000}{V} \times \eta v \quad (41)$$

H5.8 Torque T [Nm]

Actual torque transmitted by the hydraulic motor. Value given by the following formula:

$$T = \frac{(p\,A - p\,B) \times V}{2\pi \times 10} \times \eta mh \quad (42)$$

H6 DESIGNATION

MG 050 SD_H P010

PORTS

P010 = oil ports on motor housing direct — with brake

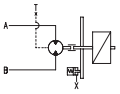

without brake

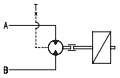

B02P = oil ports with valve brake pilot — with brake

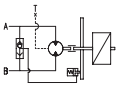

CONSTRUCTIVE SERIES

DISPLACEMENT

050	51.60	cm^3	**160**	159.60	cm^3
080	80.30	cm^3	**200**	199.80	cm^3
100	99.80	cm^3	**250**	249.30	cm^3
125	125.70	cm^3			

ORBIT MOTOR TYPE MG

H7 DISPLACEMENT SELECTION

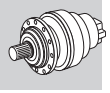

Displacement V of the hydraulic motor should be selected together with the gearbox.

Once the output torque and speed n_2 for the gearbox T_{r2} is known, proceed as follows:

Define the control pressure value pA-pB ≤ 175 bar for the motor.

Calculate the gearbox displacement value called Veq with the following formula:

$$Veq = \frac{2\pi \times 10 \times T_{r2}}{(pA - pB) \times \eta mh \times \eta d} \quad [cm^3] \qquad (43)$$

where ηmh, for example, is equal to 0.85;
η_d: gearbox dynamic efficiency, consider 0.94.

Calculate the value for flow rate Q, necessary for feeding the hydraulic motor, with the following formula:

$$Q = \frac{n_2 \times Veq}{1000 \times \eta v} \quad [l/min] \qquad (44)$$

where ηv, for example, is equal to 0.90.

- Select the gearbox size with T_{r2} and n_2.

- Look up the diagram (A23) for the gearmotor with equivalent displacement value Veq and select:
- a motor that fulfils the p int. and Q requirements and at the same time.
- the indicative value of reduction ratio i. Please consider that ratio should be obtained with as few reduction stages as possible, to save on gearmotor costs and contain dimensions.

Once you have determined the value of T_2 and the indicative value of i, select the gearbox and check your selection as indicated in chapt. 14.5.

H8 CHECKING

Check that pressure, efficiency and flow rate values correspond with values indicated in Table (A24 and A25) on motor technical features.

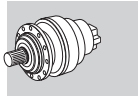

(A 23)

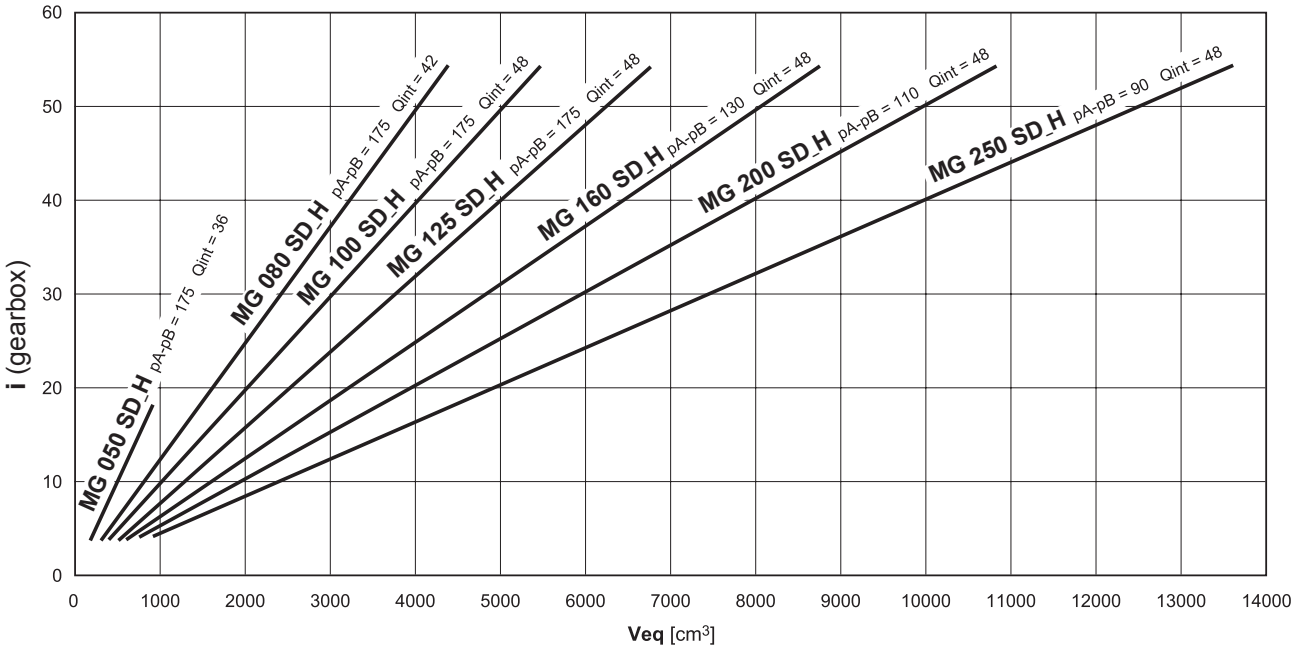
MG 050 SD_H pA-pB = 175 Qint = 36
MG 080 SD_H pA-pB = 175 Qint = 42
MG 100 SD_H pA-pB = 175 Qint = 48
MG 125 SD_H pA-pB = 175 Qint = 48
MG 160 SD_H pA-pB = 130 Qint = 48
MG 200 SD_H pA-pB = 110 Qint = 48
MG 250 SD_H pA-pB = 90 Qint = 48
i (gearbox)
Veq [cm3]

(A 24)

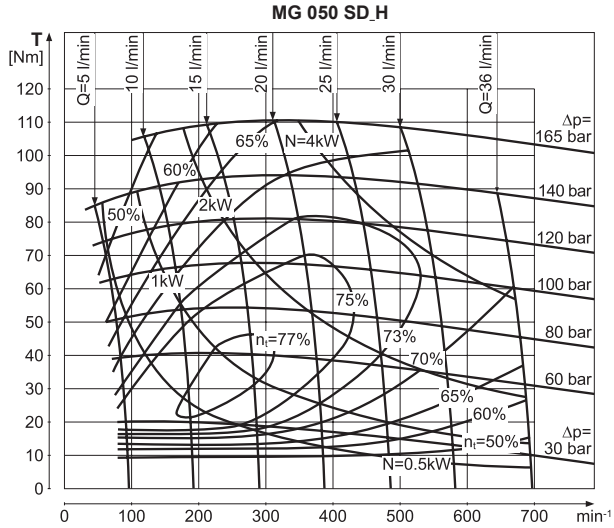
MG 050 SD_H
T [Nm]
Q=5 l/min
10 l/min
15 l/min
20 l/min
25 l/min
30 l/min
Q=36 l/min
Δp= 165 bar
140 bar
120 bar
100 bar
80 bar
60 bar
Δp= 30 bar
N=4kW
2kW
1kW
N=0.5kW
65%
60%
50%
75%
73%
70%
65%
60%
ηt=77%
ηt=50%
min-1

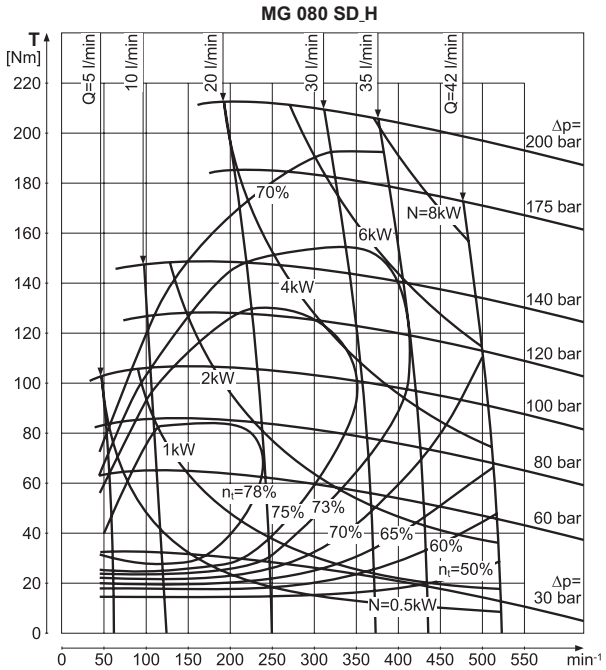
MG 080 SD_H
T [Nm]
Q=5 l/min
10 l/min
20 l/min
30 l/min
35 l/min
Q=42 l/min
Δp= 200 bar
175 bar
140 bar
120 bar
100 bar
80 bar
60 bar
Δp= 30 bar
N=8kW
6kW
4kW
2kW
1kW
N=0.5kW
70%
75%
73%
70%
65%
60%
ηt=78%
ηt=50%
min-1

(A 25)

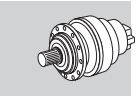

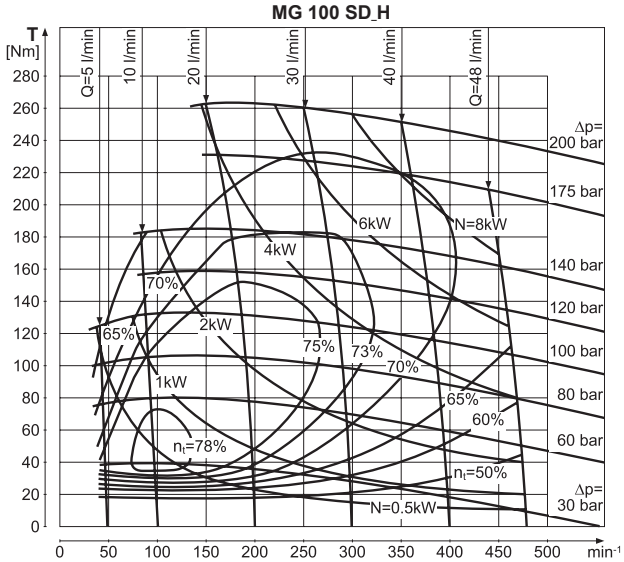

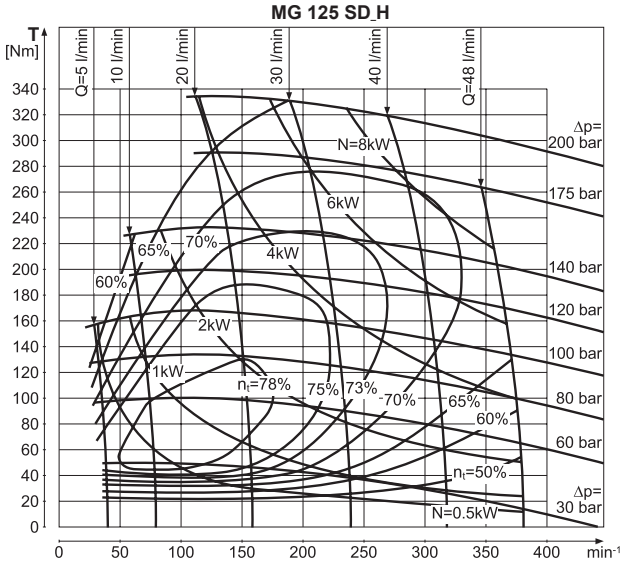

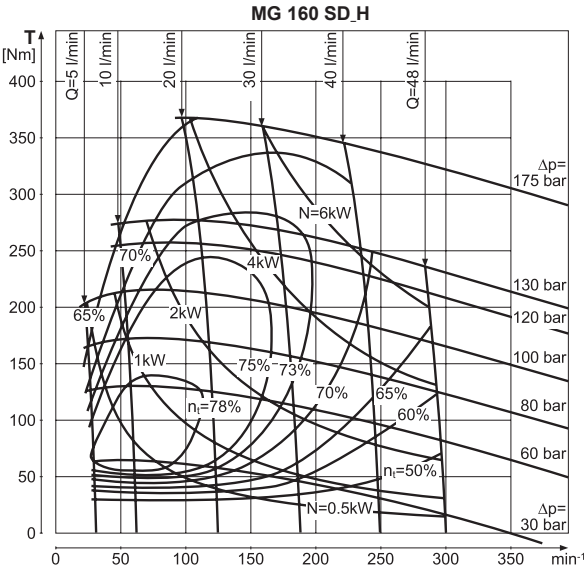

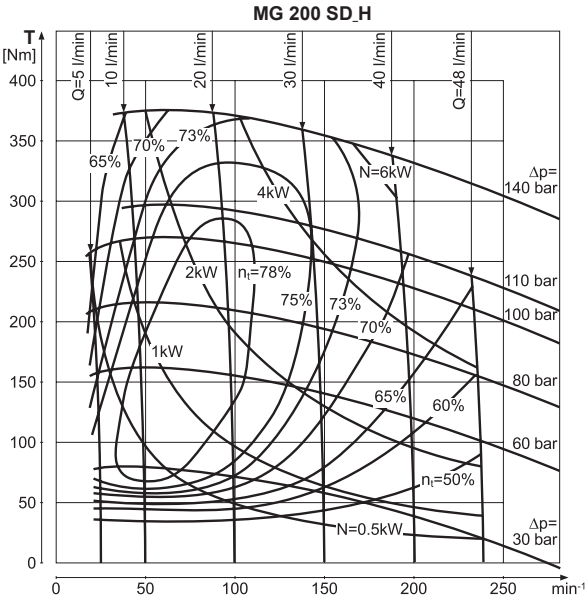

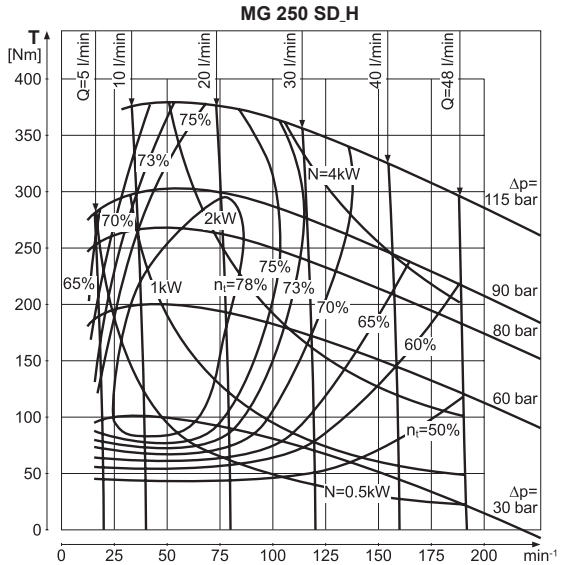

Bonfiglioli Riduttori

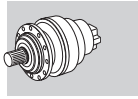

MG-**P010

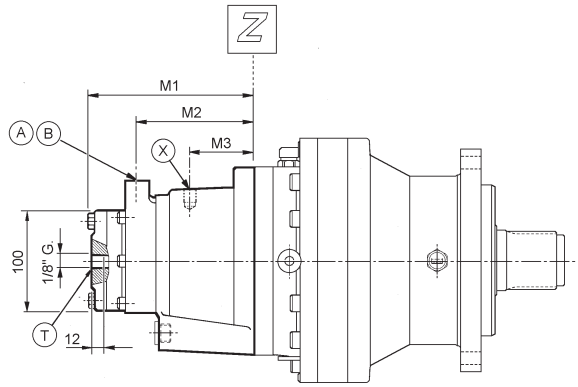

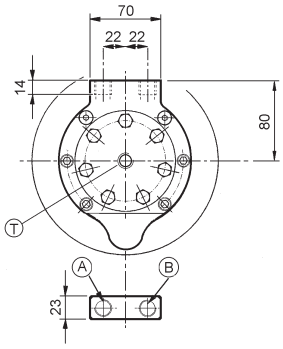

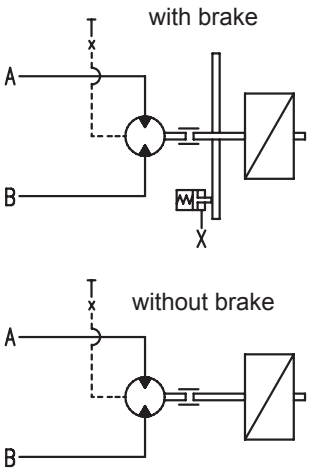

PORTS

A - B = 3/8" G 19TPI
T = 1/8" G 28TPI
X = 1/4 G 19TPI

MG-**B02P

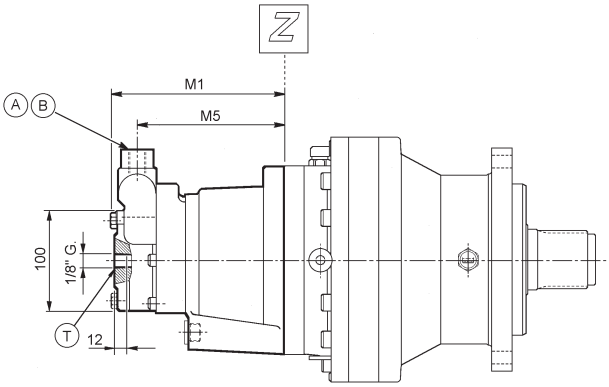

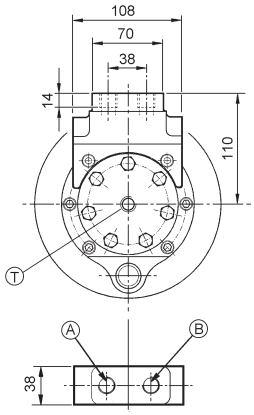

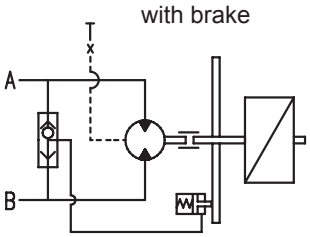

(A 26)

Suitable gearbox	Motor							Execution		
	MG 050	**MG 080**	**MG 100**	**MG 125**	**MG 160**	**MG 200**	**MG 250**	**P010**		**B02P**
	M1							M2	M3	M5
300 L1 - L2 - R2	162	167	171	175	181			113	60	143
301 L1 - L2 - R2	162	167	171	175	181	188	197	113	60	143
303 L1					203	210	219	135	77	165
303 L2 - R2	162	167	171	175	181	188	197	113	60	143
304 L1				197	203	210	219	135	77	165
304 L2 - R2	162	167	171	175	181	188	197	113	60	143
305 L1					203	210	219	135	77	165
305 L2 - R2	162	167	171	175	181	188	197	113	60	143
306 L2					203	210	219	135	77	165
306 R2 - R3	162	167	171	175	181	188	197	113	60	143
307 L2					203	210	219	135	77	165
307 R2 - R3	162	167	171	175	181	188	197	113	60	143

H11 TECHNICAL DATABRAKES FOR MG MOTORS

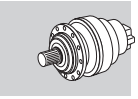

(A 27)

		Brake TYPE 3				Brake TYPE 4			
		3E	**3I**	**3L**	**3N**	**4K**	**4N**	**4R**	**4U**
Brake torque Tf	[Nm]	120	200	280	350	260	320	430	620
Min. opening pressure	[bar]	16	28	28	35	25	30	24	34
Max. operating pressure	[bar]	200							
Oil volume for brake release	[cc]	6.43	6.43	6.43	6.43	6.65	6.65	6.65	6.65

(A 28)

Suitable gearbox	Motor													
	MG 050		**MG 080**		**MG 100**		**MG 125**		**MG 160**		**MG 200**		**MG 250**	
	Tf [Nm]		Tf [Nm]		Tf [Nm]		Tf [Nm]		Tf [Nm]		Tf [Nm]		Tf [Nm]	
300 L1 - L2	120	**3E**	200	**3I**	280	**3L**	350	**3N**	350	**3N**				
300 R2	120	**3E**	200	**3I**	280	**3L**								
301 L1 - L2			200	**3I**	280	**3L**	350	**3N**	350	**3N**	350	**3N**	350	**3N**
301 R2	120	**3E**	200	**3I**	280	**3L**	350	**3N**	350	**3N**				
303 L1									430	**4R**	430	**4R**	430	**4R**
303 L2	120	**3E**	200	**3I**	280	**3L**	350	**3N**	350	**3N**	350	**3N**		
303 R2	120	**3E**	200	**3I**	280	**3L**	350	**3N**	350	**3N**	350	**3N**		
304 L1							350	**3N**	430	**4R**	430	**4R**	430	**4R**
304 L2	120	**3E**	200	**3I**	280	**3L**	350	**3N**	350	**3N**	350	**3N**		
304 R2	120	**3E**	200	**3I**	280	**3L**	350	**3N**	350	**3N**	350	**3N**		
305 L1									430	**4R**	430	**4R**	430	**4R**
305 L2	120	**3E**	200	**3I**	280	**3L**	350	**3N**	350	**3N**	350	**3N**		
305 R2	120	**3E**	200	**3I**	280	**3L**	350	**3N**	350	**3N**	350	**3N**		
306 L2			260	**4K**	260	**4K**	430	**4R**	430	**4R**	430	**4R**	430	**4R**
306 R2 - R3			200	**3I**	280	**3L**	350	**3N**	350	**3N**	350	**3N**		
307 L2					260	**4K**	430	**4R**	430	**4R**	430	**4R**	430	**4R**
307 R2 - R3			200	**3I**	280	**3L**	350	**3N**	350	**3N**	350	**3N**	350	**3N**

H12 INSTALLATION

Further to standards on gearbox installation, refer to chapter 15, comply with the following hydraulic motor installation instructions.

a) Connection to the hydraulic circuit

Motors can be connected either to closed or open circuits.
In case of an open circuit, solenoid valve or control distributor can be of the closed or open center type.

The hydraulic motor delivery side should always have a max. pressure valve set to a value not exceeding the p_{int} value allowed for the hydraulic motor. See hydraulic diagrams (A29).

Bonfiglioli Riduttori

(A 29)

CLOSED LOOP CIRCUIT **OPEN LOOP CIRCUIT**

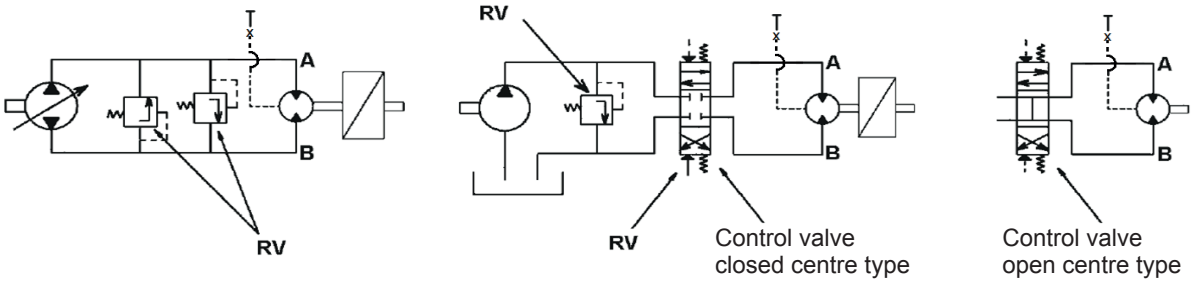

RV = Max pressure valve set to a pRV < pmax

If not possible, because the circuits control other devices needing a higher pressure and/or a closed center control valve is fitted and the motor controls parts with a high moment of inertia, max. pressure secondary valves should be as close as possible to the motor. See diagram (A30).

(A 30)

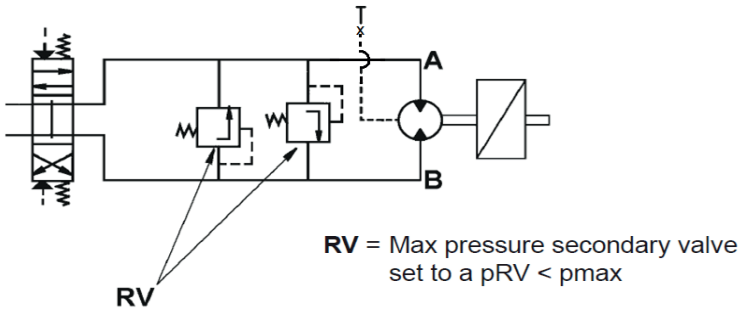

b) Connecting drain port T

These motors have a 1/8" G drain hole in the centre of the cover. The motor is supplied with the port closed by a metal plug (see figure below).

(A 31)

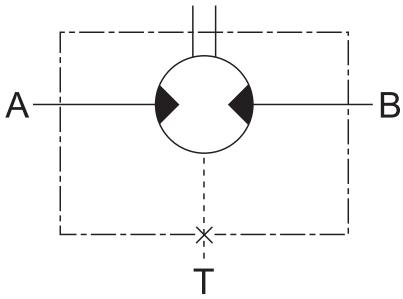

1) If the drain port is connected up, pressure at the shaft seal is always equal to the pressure in the drain line.

2) If the drain port is closed off, pressure at the shaft seal will be equal to the average to input and output pressure.

$$P_{seal} = \frac{P_{in} + P_{out}}{2}$$

The maximum values for pressure acceptable for the seal are given in the following figure (for continuous and intermittent operating conditions).

(A 32)

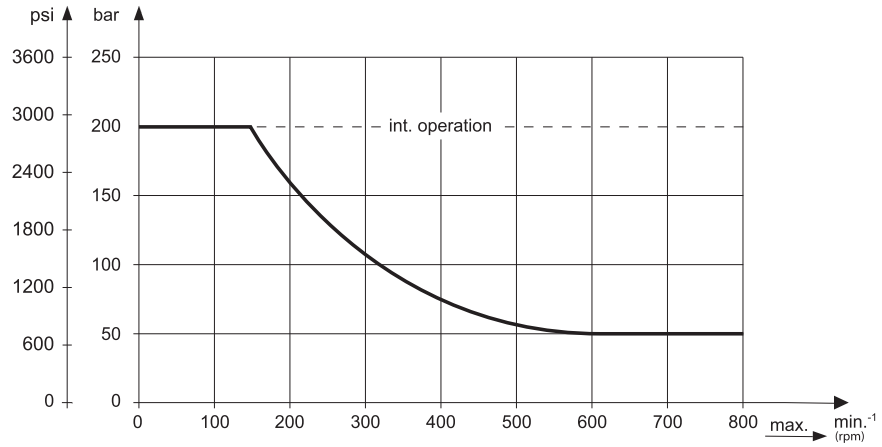

The drain port must always be connected up when more motors are operated in series.

(A 33) **OPEN LOOP CIRCUIT** **CLOSED LOOP CIRCUIT**

Control valve open centre type

Motor execution **B02P**

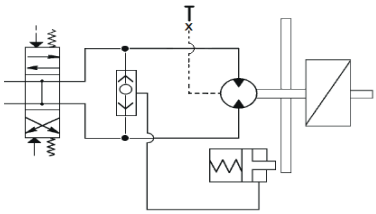

Control valve closed centre type

Motor execution **P010**

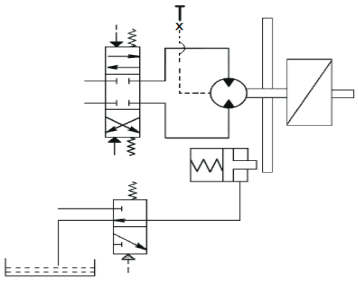

Motor execution **P010**

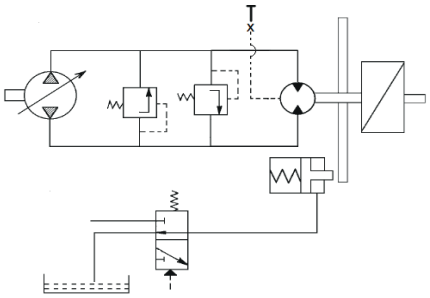

c) Brake control

For gearmotors equipped with brakes, there are two motor versions available, i.e. the B02P or P010 executions.

In the B02P version, the motor has an in-built, direct brake control system. In the P010 version, an auxiliary branching is required to control the brake. See the following diagram.

d) Hydraulic oil

Use hydraulic mineral oil with viscosity ISO VG 46 (46 Cst at t = 40°C/104°F).

It is recommended the oil temperature should be between +30°C [86°F] and +70°C [158°F].

e) Oil filtering

For reliable motor operation and long life, it is important that the hydraulic circuit has a filter for a proper oil filtering according to the following degree:

degree 9 NAS 1638
degree 6 SAE
degree 18/15 SO DIS 4406

M1 SYMBOLS AND UNITS OF MEASUREMENT

Symbols	Units of Measure	Description
cosφ	–	Power factor
η	–	Efficiency
f_m	–	Power adjusting factor
I	–	Cyclic duration factor
I_N	[A]	Rated current
I_S	[A]	Locked rotor current
J_C	[lb•ft^2]	Load moment of inertia
J_M	[lb•ft^2]	Moment of inertia
K_c	–	Torque factor
K_d	–	Load factor
K_J	–	Inertia factor
T_A	[lb•in]	Mean breakaway torque
T_B	[lb•in]	Brake torque
T_N	[lb•in]	Rated torque
T_L	[lb•in]	Counter-torque during acceleration
T_S	[lb•in]	Starting torque

Symbols	Units of Measure	Description
n	[rpm]	Rated speed
P_B	[W]	Power drawn by the brake at 20°C
P_n	[kW/hp]	Motor rated power
P_r	[kW/hp]	Required power
t_1	[ms]	Brake response time with one-way rectifier
t_{1s}	[ms]	Brake response time with electronic-controlled rectifier
t_2	[ms]	Brake reaction time with a.c. disconnect
t_{2c}	[ms]	Brake reaction time with a.c. and d.c. disconnect
t_a	[°F]	Ambient temperature
t_f	[min]	Work time at constant load
t_r	[min]	Rest time
W	[lb•ft]	Braking work between service interval
W_{max}	[lb•ft]	Maximum brake work for each braking
Z	[1/h]	Permissible starting frequency, loaded
Z_0	[1/h]	Max. permissible unloaded starting frequency (I = 50%)

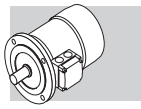

Efficiency classes and test methods

Efficiency classes characterise the efficiency with which an electric motor converts electrical energy into mechanical energy. In Europe, the energy efficiency of low voltage electric motors used to be classified using the voluntary Eff1/Eff2/Eff3 system. Outside Europe, other countries used to apply their own national systems, often very different to the European system. This uncertainty in standards led manufacturers to develop a harmonised international standard, and push for the issue of IEC (International Electrotechnical Commission) standard IEC 60034-30-1, “Efficiency classes of single-speed, three-phase, cage-induction motors (IE code)”.
In the USA, the reference standard is NEMA MG1.

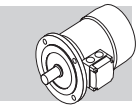

These new standards:
- defines new classes of efficiency
- **IE1** (standard efficiency)
- **IE2** (NEMA high efficiency)
- **IE3** (NEMA premium efficiency)
- provides a common, international reference system for the classification of electric motors and for national legislation
- introduces a new efficiency measurement method in conformity with standard IEC 60034-1-2:2007

The following table shows the correspondence among the main classes.

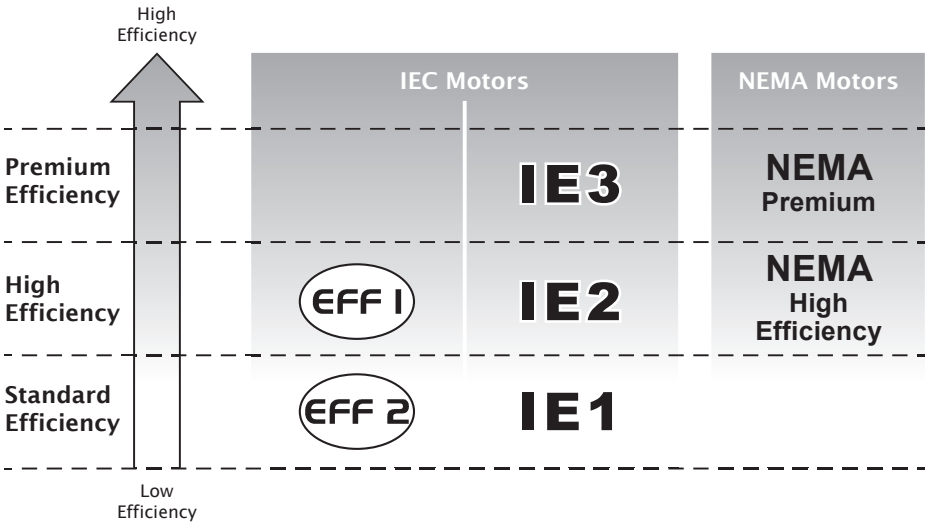

European Commission regulation 640/2009
IEC standard 60034-30-1 establishes technical guidelines for efficiency classification but does not impose any legal requirements for the adoption of any particular efficiency class. These are laid down by European Directives and national laws.
The EC Regulation applying Directive 2005/32/EC was adopted on the 22nd July 2009. This establishes the legal requirements and eco-compatible design criteria for electric motors, and imposes minimum efficiency limits according to the following schedule:
• **16/06/2011:** Electric motors must have a minimum efficiency level equivalent to class **IE2**
• **01/01/2015**: Electric motors with a rated power output between 10 HP (7.5 kW) and 500 HP (375 kW) must have
• a minimum efficiency level corresponding to **IE3**, or to **IE2** if controlled by an inverter.
• **01/01/2017:** Electric motors with a rated power output between 1 HP (0.75 kW) and 500 HP (375 kW) must have
• a minimum efficiency level corresponding to **IE3**, or to **IE2** if controlled by an inverter.

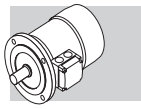

Scope and exclusions
EC Regulation 640/2009 applies to 2, 4, and 6 pole, single-speed, three-phase, 50 Hz or 60 Hz, cage-induction motors with rated outputs of 1 HP (0.75 kW) to 500 HP (375 kW), and rated voltage up to 1000 V, designed for continuous duty (S1).

The regulation does not apply to:
- brakemotors
- motors designed to function immersed in liquid
- motors that are fully integrated in a product (like a gearbox, pump, fan), so that it is not possible
- to test the performance of the motor independently of that of the product.
- motors expressly designed to function:
• at altitudes above 13.100 ft (4000 metres) a.s.l.;
• in ambient temperatures above 140 °F (60 °C);
• at maximum operating temperatures above 750 °F (400 °C);
• in ambient temperatures below -20 °F (-30 °C) (all motors) or below 32 °F (0 °C) (water-cooled motors);
• with incoming liquid coolants at temperatures below 32 °F (0 °C) or above 90 °F (32 °C);
• in potentially explosive atmospheres as defined by Directive 2014/34/EU.

DOE (the U.S. Department of Energy)
According to the Electronic Code of Federal Regulations (eCFR) of the United States of America, part 431 (ENERGY EFFICIENCY PROGRAM FOR CERTAIN COMMERCIAL AND INDUSTRIAL EQUIPMENT), subpart B (Electric Motors), the TEFC (totally enclosed fan cover) electric induction motors, whether equipped with a brake or not, may be placed onto the USA market according to the following prescriptions:
- **IE1 / Standard** motors can be sold in USA only if one or more of the following conditions apply:
• their rated power is Pn < 1 HP (0.75 kW)
• they are rated for a non-continuous duty (all duties, except S1)
• they are labelled for inverter (VFD) only operation
• they are multi speed motors
- **IE2 / High Efficiency** motors can be sold in USA **until June 1st 2016**, only if:
• have performance in accordance with NEMA design C characteristics, as described in MG1 or an equivalent IEC design(s) such as IEC Design H
- Any motors manufactured **as of June 1st 2016 onwards** shall be **IE3 / Premium Efficient**, unless the following relevant exemptions apply:
• their rated power os Pn < 1 HP (0.75 kW)
• motors rated for a non-continuous duty (all duties, except S1)
• motors labelled for inverter (VFD) only operation
• multi speed motors

M3 GENERAL CHARACTERISTICS

M3.1 Production range

The asynchronous three-phase electric motors BX, BE, BN, MX, ME and M of BONFIGLIOLI RIDUTTORI's production, are available in basic designs IMB5 and derived versions, with the following polarities: 2, 4, 6 at 50Hz and 60Hz (BX, BE / MX, ME motors are available at 60 Hz in 4 pole configuration only). For requests concerning other polarities (e.g. double speed motors), please contact the Technical Department.
Motors are provided as totally enclosed fan cooled (TEFC) according to NEMA MG1.

M3.2 Standards

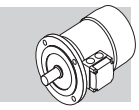

The motors described in this catalogue are manufactured to the applicable standards shown in the following table.

(F01)

Title	CEI	IEC
General requirements for rotating electrical machines	**CEI EN 60034-1**	**IEC 60034-1**
Terminal markings and direction of rotation of rotating machines	**CEI 2-8**	**IEC 60034-8**
Methods of cooling for electrical machines	**CEI EN 60034-6**	**IEC 60034-6**
Dimensions and output ratings for rotating electrical machines	**EN 50347**	**IEC 60072**
Classification of degree of protection provided by enclosures for rotating machines	**CEI EN 60034-5**	**IEC 60034-5**
Noise limits	**CEI EN 60034-9**	**IEC 60034-9**
Classification of type of construction and mounting arrangements	**CEI EN 60034-7**	**IEC 60034-7**
Rated voltage for low voltage mains power	**CEI 8-6**	**IEC 60038**
Vibration level of electric machines	**CEI EN 60034-14**	**IEC 60034-14**
Efficiency classes of single-speed, three-phase, cage-induction motors (IE code)	**CEI EN 60034-30-1**	**IEC 60034-30-1**
Standard method for determining losses and efficiency from tests	**CEI EN 60034-2-1**	**IEC 60034-2-1**

The motors also comply with foreign standards adapted to IEC 60034-1 as shown here below.

(F02)

NEMA MG1	USA
DIN VDE 0530	Germany
BS5000 / BS4999	Great Britain
AS 1359	Australia
NBNC 51 - 101	Belgium
NEK - IEC 34	Norway
NF C 51	France
OEVE M 10	Austria
SEV 3009	Switzerland
NEN 3173	Netherlands
SS 426 01 01	Sweden

M3.3 Directives 2006/95/EC (LVD) and 2004/108/EC (EMC)

BX, BE, BN, MX, ME and M motors meet the requirements of Directives 2006/95/EC (Low Voltage Directive) and 2004/108/EC (Electromagnetic Compatibility Directive) and their name plates bear the CE mark.
As for the EMC Directive, construction is in accordance with standards CEI EN 60034-1, EN 61000-6-2, EN 61000-6-4.
Motors with FD brakes, when fitted with the suitable capacitive filter at rectifier input (option **CF**), meet the emission limits required by Standard EN 61000-6-3:2007 “Electromagnetic compatibility - Generic Emission Standard - Part 6-3 Residential, commercial and light industrial environment”.
Motors also meet the requirements of standard CEI EN 60204-1 “Electrical equipment of machines”.
The responsibility for final product safety and compliance with applicable directives rests with the manufacturer or the assembler who incorporate the motors as component parts.

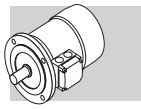

M3.4 Tolerances

As per the Norms CEI EN 60034-1, applicable the tolerances here below apply to the following quantities.

(F03)

-0.15 (1 - η) P ≤ 75 hp	Efficiency
-(1 - cosϕ)/6 min 0.02 max 0.07	Power factor
±20% *	Slip
+20%	Locked rotor current
-15% +25%	Locked rotor torque
-10%	Max. torque

(*) ± 30% for motors with Pn < 0.75 hp

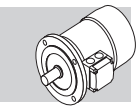

MOTOR | BRAKE

BX 132SB 4 230/400-50 IP55 CLF B5 **W** **FD** 7.5 R SB 220SA .....

OPTIONS

BRAKE SUPPLY

RECTIFIER TYPE
AC/DC
NB, **SB**, **NBR**, **SBR**

BRAKE HAND RELEASE
R, **RM**

BRAKE TORQUE

BRAKE TYPE
FD (d.c. brake)
FA (a.c. brake)

TERMINAL BOX POSITION
(compact motor only)
W (default), **N**, **E**, **S**

MOTOR MOUNTING
− compact motor
IM B5 - IEC motor

INSULATION CLASS
CL F standard
CL H option

DEGREE OF PROTECTION
IP55 standard (IP56 - option)
IP54, **IP55** brake motor

VOLTAGE - FREQUENCY
(See Paragraph M7.1)

POLE NUMBER
4

MOTOR SIZE
80B ... 355 (IEC motor)
2SB ... 5LA (compact motor)

MOTOR TYPE
BX = IEC 3-phase, class IE3 **MX** = compact 3-phase, class IE3

MOTORE | FRENO

BE 90LA 4 230/400-50 IP55 CLF B5 **W** **FD** 7.5 R SB 220SA .....

OPTIONS

BRAKE SUPPLY

RECTIFIER TYPE
AC/DC
NB, **SB**, **NBR**, **SBR**

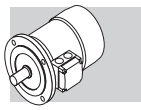

BRAKE HAND RELEASE
R, **RM**

BRAKE TORQUE

BRAKE TYPE
FD (d.c. brake)
FA (a.c. brake)

TERMINAL BOX POSITION
(compact motor only)
W (default), **N**, **E**, **S**

MOTOR MOUNTING
− compact motor
IM B5 - IEC motor

INSULATION CLASS
CL F standard
CL H option

DEGREE OF PROTECTION
IP55 standard (IP56 - option)
IP54, **IP55** brake motor

VOLTAGE - FREQUENCY
(See Paragraph M7.1)

POLE NUMBER
2, **4**, **6**

MOTOR SIZE
63A ... 180L (IEC motor)
05 ... 5L (compact motor)

MOTOR TYPE
BE = IEC 3-phase, class IE2 **ME** = compact 3-phase, class IE2

MOTOR | BRAKE

BN 90LA 4 230/400-50 IP55 CLF B5 **W** **FD** 7.5 R SB 220SA .....

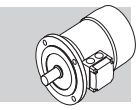

OPTIONS

BRAKE SUPPLY

RECTIFIER TYPE
AC/DC
NB, **SB**, **NBR**, **SBR**

BRAKE HAND RELEASE
R, **RM**

BRAKE TORQUE

BRAKE TYPE
FD (d.c. brake)
FA (a.c. brake)

TERMINAL BOX POSITION
(compact motor only)
W (default), **N**, **E**, **S**

MOTOR MOUNTING
− compact motor
IM B5 - IEC motor

INSULATION CLASS
CL F standard
CL H option

DEGREE OF PROTECTION
IP55 standard (IP56 - option)
IP54, **IP55** brake motor

VOLTAGE - FREQUENCY
(See Paragraph M7.1)

POLE NUMBER
2, **4**, **6**, **2/4**, **2/6**, **2/8**, **2/12**, **4/6**, **4/8**

MOTOR SIZE
56A ... 200LA (IEC motor)
0B ... 5SB (compact motor)

MOTOR TYPE
BN = IEC 3-phase **M** = IEC compact 3-phase

M5 VARIANTS AND OPTIONS

M5.1 Variants

(F04)

Description		Default	Option	Page
Voltage (BN - BE - BX) ≤ 132		230/400/50		565
Voltage (BN - BE - BX) ≥ 160		400/690/50		
Protection class	BX - BE - BN - MX - ME - M	IP 55	IP 56	562
	BX - BE - BN / FD - FA MX - ME - M / FD - FA	IP 54	IP 55	
	BX_FD ≥ 200	IP 55		
	BX...K - BX... K_FDK	IP 55	IP 56	
Insulation class		CLF	CLH	569
Design version	BX - BE - BN	**B5** **B5 R**		561

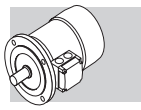

Default values.

M5.2 Options

(F05)

Description	Catalogue numbers								Availability	Page
Thermal protective devices	**D3**	**K1**	**E3**						BX - BE - BN MX - ME - M	585 - 586
50 Hz normalized power	**PN**								BN M	567
Feedback devices	**EN1**	**EN2**	**EN3**	**EN4**	**EN5**	**EN6**	**EN7**	**EN8***	BX - BE - BN MX - ME - M	594
Anti-condensate heaters	**H1**	**NH1**							BX - BE - BN MX - ME - M	589
Tropicalized windings	**TP**								BX - BE - BN MX - ME - M	590
Double-extended shaft	**PS**								BX - BE - BN MX - ME - M	590
Rotor balancing grade B	**RV**								BX - BE - BN MX - ME - M	591
External mechanical protections	**RC**	**TC**							BX - BE - BN MX - ME - M	593
Forced ventilation	**U1**	**U2****							BX - BE - BN MX - ME - M	591
Certification CSA/UL	**CUS**								BX - BE - BN MX - ME - M	567
China Compulsory Certification	**CCC**								BX - BE - BN MX - ME - M	569
Plug connector	**CON**								BX - BE - BN MX - ME - M	586
Surface protection	**C_**								BX - BE - BN MX - ME - M	596
Painting	**RAL**								BX - BE - BN MX - ME - M	596
Certificates	**ACM**								BX - BE - BN MX - ME - M	597
Inspection certificate	**CC**								BX - BE - BN MX - ME - M	597
Backstop device	**AL**	**AR**							MX - ME - M	590
Type of duty	**S2**	**S3**	**S9**						BN M	570

*Only for BX ≥ 280 and BX ≥ 280K ** Only for motors BN

M5.3 Brake-related options

(F06)

Description	Catalogue numbers				Availability	Page
Brake torque	Refer to the specific brake type					578-581
Manual release lever	**R**	**RM**			BX - BE - BN MX - ME - M	583
Release lever orientation	**AB**	**AA**	**AC**	**AD**	BX - BE - BN MX - ME - M	584
DC brake rectifier	**NB**	**NBR**	**SB**	**SBR**	BX - BE - BN MX - ME - M	577
Soft-start flywheel	**F1**				BN M	585
Capacitive filter	**CF**				BX - BE - BN MX - ME - M	585
Brake separate power supply (*)	**...SA**	**...SD**			BX - BE - BN MX - ME - M	584
Brake functionality check	**MSW**				BX - BE - BN MX - ME - M	589
Additional cable entry for brake motors	**IC**				BN M	589

(*) Specify voltage.

Default values.

M5.4 Example of identification nameplate

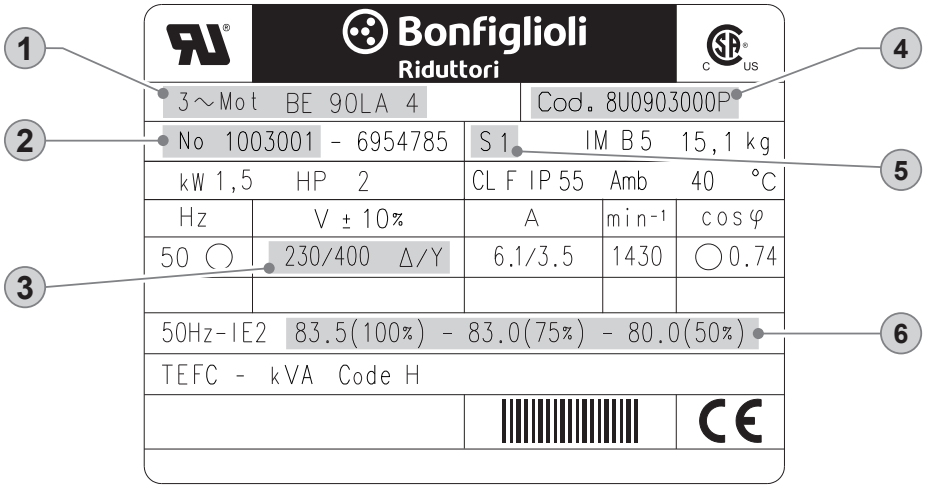

① BONFIGLIOLI Motor type

② Serial number

③ Rated voltage

④ Motor code

⑤ Type of duty: S1 Continuous duty

⑥ IE Class, Efficiency at: 4/4 - 3/4 - 2/4 load

M6 MECHANICAL FEATURES

M6.1 Versions

EC-normalised BX, BE and BN motors are available in the design versions as indicated in the table below here after as per Standards EN 60034-7 (BX, BE), CEI EN 60034-14 (BN).

Mounting versions are:

IM B5 (basic)
IM V1, IM V3 (derived)

IM B5 design motors can be installed in positions IM V1 and IM V3. In such cases, the basic design IM B5 is indicated on the motor name plate.
In design versions with a vertically located motor and shaft downwards, it is recommended to request the drip cover (always necessary for brake motors). This facility, included in the option list should be specified when ordering as it does not come as a standard device

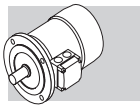

(F07)

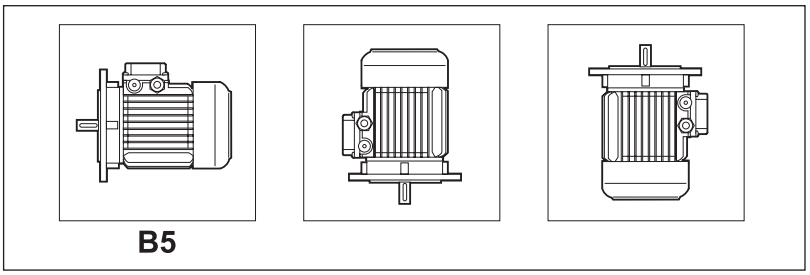

Flange output motors are also available with reduced coupling dimensions, as indicated in the table below - executions **B5R**. Their use in combination with gearboxes must be however coherent with the maximum installable power on gearboxes themselves (see chapters “Motors availability”). In case this condition is not met need to contact the Technical Service for the checking of the combination.

(F08)

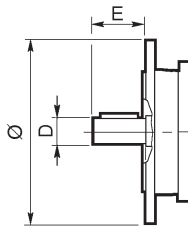

		BN 71	BX/BE/BN 80	BX/BE/BN 90	BX/BE/BN 100	BX/BE/BN 112	BX/BE/BN 132
		DxE - Ø					
B5R	*[mm]*	*11x23 - 140*	*14x30 - 160*	*19x40 - 200*	*24x50 - 200*	*24x50 - 200*	*28x60 - 250*
	[in]	0.433x0.905 - 5.511	0.551x1.181 - 6.299	0.748x1.574 - 7.874	0.944x1.968 - 7.874	0.944x1.968 - 7.874	1.102x2.362 - 9.842

B5R flange is provided with through holes

M6.2 Degree of protection

IP..

The following chart provides an overview of the degrees of protection available.
In addition to the degree of protection specified when ordering, motors to be installed outdoors require protection against direct sunlight and also – when they are to be installed vertically down – a drip cover to prevent the ingress of water and solid particles (option **RC**).

(F09)

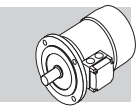

		IP 54	IP 55	IP 56
BX - BE - BN	**MX - ME - M**	⊖	standard	
BX_FD **BX_FA** **BN_FD** **BN_FA**	**MX_FD** **MX_FA** **M_FD** **M_FA**	standard		⊖

IP	5	5

0		Not protected
1	∅ 50 mm	Protected against extraneous solid bodies having Ø ≥ 50 mm
2	∅ 12 mm	Protected against extraneous solid bodies having Ø ≥ 12.5 mm
3	∅ 2,5 mm	Protected against extraneous solid bodies having Ø ≥ 2.5 mm
4	∅ 1 mm	Protected against extraneous solid bodies having Ø ≥ 1.0 mm
5		Protected against dust
6		No dust ingress

0		Not protected
1		Protected against vertical water drips
2	15°	Protected against vertical water drips inclined up to 15°
3	60°	Protected against rain
4		Protected against water splashes
5		Protected against jets of water
6		Protected against powerful jets of water
7	0,15 m / 1 m	Protected against the effects of temporary immersion
8	m	Protected against the effects of continuous immersion

Bonfiglioli Riduttori

M6.3 Cooling

The motors are externally ventilated (IEC 411 / NEMA MG1-6 - CEI EN 60034-6) and are equipped with a plastic fan working in both directions.
The motors must be installed allowing sufficient space between fan cowl and the nearest wall to ensure free air intake and allow access for maintenance purposes on motor and brake, if supplied.
Independent, forced air ventilation (IC 416) can be supplied on request (option U1).
This solution enables to increase the motor duty factor when driven by an inverter and operating at reduced speed.

M6.4 Direction of rotation

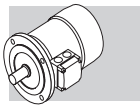

Rotation is possible in both directions. If terminals U1, V1 and W1 are connected to line phases L1,L2 and L3, clockwise rotation (looking from drive end) is obtained. For counterclockwise rotation, switch two phases.

M6.5 Noise

Noise levels, measured using the method prescribed by ISO 1680 Standards, are within the maximum levels specified by Standards CEI EN 60034-9.

M6.6 Vibrations and balancing

Rotor shafts are balanced with half key fitted and fall within the vibration class N, as per Standard CEI EN 60034-14.

M6.7 Terminal box

Terminal board features 6 studs for eyelet terminal connection (9 studs execution for US voltage “Dual Voltage”). A ground terminal is also supplied for earthing of the equipment.
Terminals number and type are shown in the following table.
For brake power supply, please read par. M9 (brake FD), M10 (brake FA).
Brakemotors house the a.c./d.c. rectifier (factory pre-wired) inside the terminal box.
Wiring instructions are provided either in the box or in the user manual.

(F10)

		No. of terminals	Terminal threads [*mm*]	Wire max cross section area [mm^2 / in^2]
BX 80, BX 90 **BE 80, BE 90** **BN 56 ... BN 90**	**MX2, MX3** **ME2** **M05 ... M2**	6	*M4*	*2.5* / 0.098
BX 100 ... BX 132 **BE 100 ... BE 132** **BN 100 ... BN 160MR**	**MX3, MX4** **ME3, ME4** **M3 ... M4**	6	*M5*	*6* / 0.236
BX 160 - BE 160 ... BE 180M **BN 160M ... BN 180M**	**ME5** **MX5 - M5**	6	*M6*	*16* / 0.629
BX 180 - BE 180L **BN 180L ... BN 200L**	**–** **–**	6	*M8*	*25* / 0.984
BX 80 ... BX 132 **BE 80 ... BE 132** **BN 63 ... BN 160MR**	**MX2 ... MX4** **ME2 ... ME4** **M05 ... M4**	9	*M4*	*6* / 0.236
BX 160 ... BX 180 **BE 160 ... BE 180** **BN 160M ... BN 200L**	**MX5** **ME5** **M5**	9	*M6*	*16* / 0.629

M6.8 Cable entry

The holes used to bring cables to terminal boxes use metric threads in accordance with standard EN 50262 as indicated in the table here after.

(F11)

		Cable gland and dimensions		Maximum cable diameter allowed [*mm* / inch]
BN 63	**M05**	2 x *M20* x 1.5	1 Hole on each side	*13* / 0.512
BN 71	**M1**	2 x *M25* x 1.5		*17* / 0.669
BX 80, BX 90 - BE 80, BE 90 **BN 80, BN 90**	**MX2, MX3 - ME2** **M2**	2 x *M25* x 1.5		*17* / 0.669
BX 100, BX 112 - BE 100, BE 112 **BN 100**	**MX3, MX4 - ME3** **M3**	2 x *M32* x 1.5	2 Holes on each side	*21* / 0.827
		2 x *M25* x 1.5		*17* / 0.669
BN 112	**–**	2 x *M32* x 1.5		*21* / 0.827
		2 x *M25* x 1.5		*17* / 0.669
BX 132 - BE 132 **BN 132...BN 160MR**	**MX4 - ME4** **M4**	4 x *M32* x 1.5		*21* / 0.827
BX 160 - BE 160, BX 180 - BE 180 **BN 160M...BN 200L**	**MX5 - ME5** **M5**	2 x *M40* x 1.5	Pivoting, 4 x 90°	*28* / 1.102

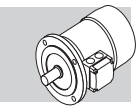

M6.9 Bearings

Life lubricated preloaded radial ball bearings are used, types are shown in the chart here under. Calculated endurance lifetime L_{10h}, as per ISO 281, in unloaded condition, exceeds 40,000 hrs.
DE = drive end **NDE** = non drive end

(F12)

	DE	**NDE**	
	M, M_FD, M_FA	**M**	**M_FD, M_FA**
M05	6004 2Z C3	6201 2Z C3	6201 2RS C3
M1	6004 2Z C3	6202 2Z C3	6202 2RS C3
MX2 - ME2 - M2	6007 2Z C3	6204 2Z C3	6204 2RS C3
MX3 - ME3 - M3	6207 2Z C3	6206 2Z C3	6206 2RS C3
MX4 - ME4 - M4	6309 2Z C3	6308 2Z C3	6308 2RS C3
MX5 - ME5 - M5	6309 2Z C3	6309 2Z C3	6309 2RS C3

	DE	**NDE**	
	BX, BE, BN	**BX, BE, BN**	**BN_FD** **BN_FA**
BN 56	6201 2Z C3	6201 2Z C3	–
BN 63	6201 2Z C3	6201 2Z C3	6201 2RS C3
BN 71	6202 2Z C3	6202 2Z C3	6202 2RS C3
BX 80 - BE 80 **BN 80**	6204 2Z C3	6204 2Z C3	6204 2RS C3
BX 90 - BE 90 **BN 90**	6205 2Z C3	6205 2Z C3	6305 2RS C3
BX 100 - BE 100 **BN 100**	6206 2Z C3	6206 2Z C3	6206 2RS C3
BX 112 - BE 112 **BN 112**	6306 2Z C3	6306 2Z C3	6306 2RS C3
BX 132 - BE 132 **BN 132**	6308 2Z C3	6308 2Z C3	6308 2RS C3
BN 160MR	6309 2Z C3	6308 2Z C3	6308 2RS C3
BX 160M/L **BE 160M/L** **BN 160M/L**	6309 2Z C3	6309 2Z C3	6309 2RS C3
BN 180M	6310 2Z C3	6309 2Z C3	6309 2RS C3
BX 180M/L **BE 180M/L** **BN 180L**	6310 2Z C3	6310 2Z C3	6310 2RS C3
BN 200L	6312 2Z C3	6310 2Z C3	6310 2RS C3

M7 ELECTRICAL CHARACTERISTICS

M7.1 Voltage

Single speed motors are provided in standard execution either for nominal voltage 230 / 400 V, 50 Hz, or 400 / 690 V, 50 Hz, or 230 / 460 V, 60 Hz with a voltage tolerance of ± 10%, according to what is specified on the below table.
On all the motors BN and M, for which the voltage / frequency configuration is not included on the below table, the voltage tolerance is reduced down to ± 5%.
For the operation out of the tolerance boundaries, the temperature may exceed by 10 K the limit provided by the adopted insulation class.
The motors are suitable for operation on distribution European grid with voltage complying with the pubblication IEC 60038.

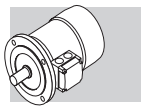

(F13)

Efficiency class			V_{mot} ± 10 % 3 ~	Configuration
IE3	**BX 80 ... BX 132**	**MX2 ... MX4**	230 / 400 V - Δ/Y - 50 Hz	standard
	BX 160, BX 180	**MX 5**	400 / 690 V - Δ/Y - 50 Hz	standard
IE2	**BE 80 … 132**	**ME2 … ME4**	230 / 400 V - Δ/Y - 50 Hz	standard
			460 V Y - 60 Hz[1]	standard
			400 / 690 V - Δ/Y - 50 Hz	At request, carries no extra charge
	BE 160, BE 180	**ME5**	400 / 690 V - Δ/Y - 50 Hz	standard
			460 V Δ - 60 Hz[1]	standard
IE1	**BN 56 … BN 132**	**M0 … M4**	230 / 400 V - Δ/Y - 50 Hz	standard
			400 / 690 V - Δ/Y - 50 Hz	At request, carries no extra charge
			460 V Y - 60 Hz	standard
	BN 160 … BN 200	**M5**	400 / 690 V - Δ/Y - 50 Hz	standard
			460 V Δ - 60 Hz	standard

[1] 4 pole motor only

The only rated voltage for motors type at 50 Hz and all double speed motors is 400 V.
Applicable tolerances as per CEI EN 60034-1.

The table below shows the wiring options available.

M7.2 Frequency

(F14)

Number of poles		Winding connection
2	**BE 80 … BE 160, BN 63 … BN 200**	Δ / Y (2)
4	**BX 80 ... BX 180** **BE 80 … BE 180, BN 56 … BN 200**	
6	**BE 90 … BE 160, BN 63 … BN 200**	
8	**BN 71 … BN 132**	
2/4	**BN 63 … BN 132**	Δ / YY (Dahlander)
2/6	**BN 71 … BN 132**	Y / Y (Two windings)
2/8	**BN 71 … BN 132**	
2/12	**BN 80 … BN 132**	
4/6	**BN 71 … BN 132**	
4/8	**BN 80 … BN 132**	Δ / YY (Dahlander)

(2) Motors with voltage in ratio 2 (ex. 230/460 - 60) will be equipped with a 9 pin terminal box with winding connection either Δ Δ/ Δ or YY / Y (except 6 pole BN 63 Δ / Y)

Rated output power BN / M for 60 Hz operation is shown in the following diagram.

(F15)

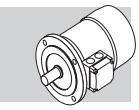

		P_n [*kW*/HP]			
		2P	**4P**	**6P**	**8P (*)**
BN 56A	**–**	–	*0.07* / 0.09	–	–
BN 56B	**M0B**	–	*0.10* / 0.13	–	–
BN 63A	**M05A**	*0.21* / 0.28	*0.14* / 0.19	*0.10* / 0.13	–
BN 63B	**M05B**	*0.30* / 0.40	*0.21* / 0.28	*0.14* / 0.19	–
BN 63C	**M05C**	*0.45* / 0.60	*0.30* / 0.40	–	–
BN 71A	**–**	*0.45* / 0.60	*0.30* / 0.40	*0.21* / 0.28	*0.10* / 0.13
–	**M1SC**	–	–	*0.21* / 0.28	–
BN 71B	**M05SD**	*0.65* / 0.87	*0.45* / 0.60	*0.30* / 0.40	*0.14* / 0.19
BN 71C	**M1LA**	*0.90* / 1.21	*0.65* / 0.87	*0.45* / 0.60	–
BN 80A	**–**	*0.90* / 1.21	*0.65* / 0.87	*0.45* / 0.60	*0.21* / 0.28
BN 80B	**M2SA**	*1.30* / 1.74	*0.90* / 1.21	*0.65* / 0.87	*0.30* / 0.40
BN 80C	**M2SB**	*1.8* / 2.41	*1.30* / 1.74	*0.90* / 1.21	–
BN 90S		–	*1.30* / 1.74	*0.90* / 1.21	*0.45* / 0.60
BN 90SA	**–**	*1.8* / 2.41	–	–	–
BN 90SB		*2.2* / *2.95*	–	–	–
BN 90L	**M3SA**	*2.5* / 3.35	–	*1.30* / 1.74	*0.65* / 0.87
BN 90LA		–	*1.8* / 2.41	–	–
BN 90LB	**–**	–	*2.2* / *2.95*	–	–

		P_n [*kW*/HP]			
		2P	**4P**	**6P**	**8P (*)**
BN 100L	**M3LA**	*3.5* / 4.69	–	–	–
BN 100LA		–	*2.5* / 3.35	*1.8* / 2.41	*0.90* / 1.21
BN 100LB	**M3LB**	*4.7* / 6.30	*3.5* / 4.69	*2.2* / *2.95*	*1.30* / 1.74
BN 112M	**–**	*4.7* / 6.30	*4.7* / 6.30	*2.5* / 3.35	*1.8* / 2.41
–	**M3LC**	–	*4.7* / 6.30	*2.5* / 3.35	–
BN 132S	**M4SA**	–	*6.5* / 8.62	*3.5* / 4.69	*2.5* / 3.35
BN 132SA		*6.5* / 8.62	–	–	–
BN 132SB	**M4SB**	*8.7* / 11.67	–	–	–
BN 132M	**M4LA**	*11* / 14.75	–	–	*3.5* / 4.69
BN 132MA		–	*8.7* / 11.67	*4.6* / 6.17	–
BN 132MB	**M4LB**	–	*11* / 14.75	*6.5* / 8.62	–
BN 160MR	**M4LC**	*12.5* / 16.76	*12.5* / 16.76	–	–
BN 160M	**M5SA**	–	–	*8.6* / 11.53	–
BN 160MB	**–**	*17.5* / 23.47	–	–	–
–	**M5SB**	*17.5* / 23.47	*17.5* / 23.47	–	–
BN 160L	**–**	*21.5* / 28.83	*17.5* / 23.47	*12.6* / 16.9	–
–	**M5SC**	*21.5* / 28.83	–	–	–
BN 180M	**M5LA**	*24.5* / 32.85	*21.5* / 28.83	–	–
BN 180L	**–**	–	*25.3* / 33.93	*17.5*/ 23.47	–
BN 200L	**–**	–	*34* / 45.59	–	–
BN 200LA	**–**	*34* / 45.59	–	*22* / 29.50	–

(*) Excluded M_ motors

BX, BE / MX, ME motors are available at 60 Hz on a 4 pole configuration only, and their power rating is the same as their 50 Hz counterpart. Double speed BN / M motors supplied at 60 Hz will have an increase of nominal power, referred to 50 Hz, equal to 15%, whereas double speed BX / BE / MX / ME motors are not available. If a nominal power rating, equal to the normalised nominal power rating at 50 Hz, was requested to be on a nameplate of a motor meant to be voltage supplied at 60 Hz, the PN option shall be specified on the motor designation.
Motors normally designed for a 50 Hz frequency may be used on a 60 Hz operating grid, but the related data shall be updated according to the following table. Motors designated for 50 Hz operation show on the nameplate also the values for 60 Hz operation
(excluding motors in CUS execution and brake motors). See the following table.

(F16)

	50 Hz	**60 Hz**			
	V - 50 Hz	**V** - 60 Hz	**Pn** - 60 Hz	T_n, T_a/T_n - 60 Hz	**n** [rpm] - 60 Hz
BX/MX BE/ME	**230/400 Δ/Y**	265 - 460 Δ Y	1	0.83	1.2
	400/690 Δ/Y	460 Δ			
BN/M	**230/400 Δ/Y**	220 - 240 Δ			
		380 - 415 Y			
	400/690 Δ/Y	380 - 415 Δ			
BN/M	**230/400 Δ/Y**	265 - 280 Δ	1.15	1	1.2
		440 - 480 Y			
	400/690 Δ/Y	440 - 480 Δ			

Bonfiglioli Riduttori

M7.3 Ambient temperature

Catalogue rating values are calculated for standard ambient conditions (temperature 104 °F / 40 °C; elevation ≤ 3300 ft / 1000 m a.s.l.) as per the CEI EN 60034-1 Standards.
The motors can be used within the 104 -140 °F / 40 - 60 °C temperature range with rated power output adjusted by factors given in the table below.

(F17)

Ambient temperature [°F]	100°	115°	120°	130°	140°
Permitted power as a % of rated power	100%	95%	90%	85%	80%

Should a derating factor higher than 15% apply please consult factory.

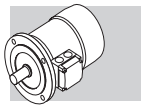

M7.4 50 HZ normalized power

PN

With this option, motor name plate includes 50 Hz normalized power information even when motor is designated for operation with 60 Hz power mains. For 60 Hz supplies along with voltages 230/460V and 575V the PN option is applied by default.

M7.5 Motors for USA and Canada

CUS

CUS option is available in NEMA Design C execution for BN, BE, M, ME motors, and NEMA Design B for BX motors, with regards to the electrical features. Motors are certified in compliance with CSA (Canadian Standard) C22.2 N° 100 and UL (Underwriters Laboratory) UL 1004-1 standards, as stated on UL file E308649.
BN, BE, M, ME motors nameplates show the below marks:

C US

BX, MX motors nameplates show the below marks and are certified in compliance with the energy efficiency standards in effect in the USA and Canada, respectively provided by DOE (10 CFR Part 431) and NRCan (Energy Efficiency Regulations), tested according to CSA C390 standard.

ENERGY
C US

CC320B

NOTES:

1. Starting from **June, 1st 2016**, CUS motors whose efficiency is below IE3 (i.e. “Premium Efficiency”) cannot be any longer sold in the USA and Canada, unless one or more of the following conditions apply:
   - Double speed motors;
   - Motors plated for a non - continuous duty (<80%);
   - Motors intended to be operated through variable frequency drive only (properly equipped with “Inverter Duty Only” label, or similar).

2. BX 100, MX3LA and MX3LB motors are available for the USA only and not for Canada, and the related marks
   reported on the nameplates are the following:

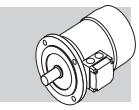

ENERGY

CC320B

The CUS option does not apply to servo-ventilated motors.
US power mains voltages and the corresponding rated voltages to be specified for the motor are indicated in the following table:

(F18)

Frequency	Mains voltage	V_{mot}
60 Hz	208 V	**200 V**
	240 V	**230 V**
	480 V	**460 V**
	600 V	**575 V**

CUS option is applicable onto 50 Hz operating motors as well (motors BX, MX excluded).

Motors with voltage in ratio 2 (e.g. 230/460-60; 220/440-60) feature, as standard, a 9-stud terminal board. For same executions, as well as for 575V-60Hz supply, the nominal rating is coincident with the correspondent 50Hz rating.
For DC brake motors type FD, the rectifier is connected to a single-phase 230 VAC supply voltage in the motor terminal box.
Brake power supply for brake motors is as follows:

(F19)

BX_FD - BN_FD **MX_FD - M_FD**
Connected to terminal box 1~230V c.a.

BX_FA - BN_FA **MX_FA - M_FA**		Power supply
Separate power supply	230V Δ	230SA
Separate power supplya	460V Y	460SA

M7.6 China Compulsory Certification

CCC

Electric motors destined to be sold in the People's Republic of China have to be certified under the CCC (China Compulsory Certification) system. BN motors of up to 62 lb•in in rated torque are available with CCC certification and a special nameplate bearing the mark shown below:

CCC option is not currently available for IE3 motors.
CCC option is not currently available for servo - ventilated motors.

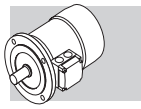

M7.7 Insulation class

CL F

Bonfiglioli motors use class **F** insulating materials (enamelled wire, insulators, impregnation resins) as compare to the standard motor. In standard motors, stator windings over temperature normally stays below the 80 K limit corresponding to class B over temperature.
A careful selection of insulating components makes the motors compatible with tropical climates and normal vibration.
For applications involving the presence of aggressive chemicals or high humidity, contact Bonfiglioli Engineering for assistance with product selection.

CL H

Motors manufactured in insulation class **H** are available at request.
Not available for motors in compliance with CSA e UL standards (CUS option).

(F20)

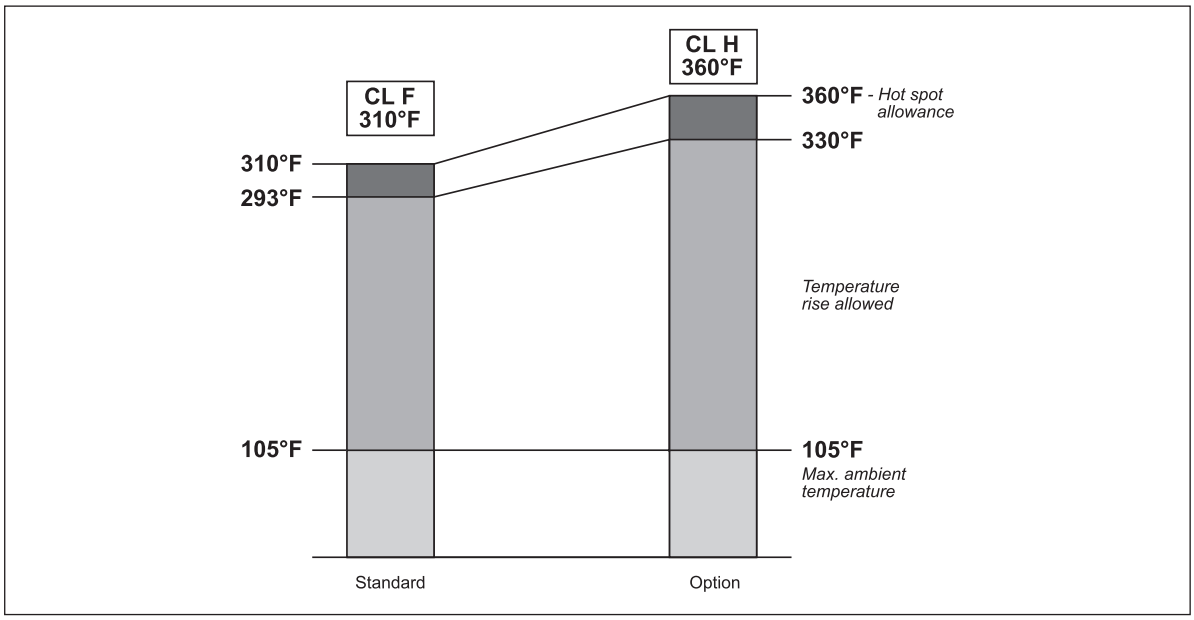

M7.8 Type of duty

Unless otherwise specified, catalogue motor power refers to continuous duty S1.
Any operating conditions other than S1 duty must be identified in accordance with duty cycle definitions laid down in standards CEI EN 60034-1.
For duty cycles S2 and S3, the power increase co-efficient reported in the following table may be used. Please note that the table provided below applies to single-speed motors.
As an alternative to S1 continuous duty, one of the following values can be specified at the product configuration stage: S2, S3 or S9. The motor nameplate will be marked with an increased power rating to suit the type of duty, and with specific electrical data and a duty type of S2-30 min, S3-70% or S9 respectively.
For further details, contact Bonfiglioli's Technical Service.
Please contact Bonfiglioli Engineering for the power increase coefficients applicable to switch-pole motors.

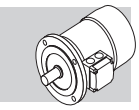

(F21)

	Type of duty						
	S2			S3 *			S4 - S9
	Duration (min)			Intermittence (I)			Contact us
	10	**30 (*)**	**60**	**25%**	**40%**	**70% (*)**	
f_m	1.35	1.15	1.05	1.25	1.15	1.1	

* Cycle duration must, in any event, be equal to or less than 10 minutes; if this time is exceeded, please contact our Technical Service.
(*) Default values from options (tab. F05).

M7.8.1 Cyclic duration factor:

$$I = \frac{t_f}{t_f + t_r} \cdot 100 \qquad (01)$$

t_f = work time under constant load
t_r = rest time

M7.8.2 Limited duration duty S2

This type of duty is characterized by operation at constant load for a limited time, which is shorter than the time required to reach thermal equilibrium, followed by a rest period of sufficient duration to restore ambient temperature in the motor.

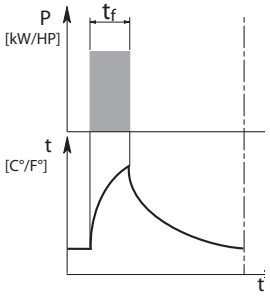

M7.8.3 Periodical intermittent duty S3:

This type of duty is characterized by a sequence of identical operation cycles, each including a constant load operation period and a rest period.
For this type of duty, the starting current does not significantly influence overtemperature.

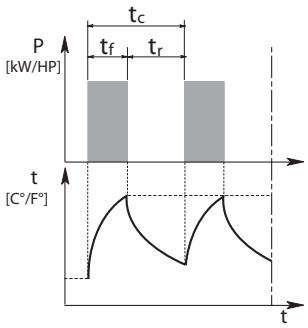

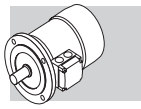

M7.9 Inverter-controlled motors

The Bonfiglioli electric motors may be used in combination with PWM inverters with rated voltage at a transformer input up to 500 V. Standard motors use a phase insulating system with separators, class 2 enameled wire and class H impregnation resins (1600V peak-to-peak voltage pulse capacity and rise edge ts > 0.1μs at motor terminals are allowed).
The Bonfiglioli electric motors may be continuously operated (S1 duty) in “turn - down” mode, i.e. at frequencies lower than the rated frequency, hereafter also called “base frequency” - fb, in ratios fb / f up to 10 : 1, according to the below reported tables.

(F22)

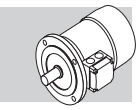

INVERTER OPERATION - BE MOTORS TURN-DOWN DATA																			
4 pole 1800 min^{-1} S1	Inverter operation Motor data 10:1 (60-6Hz) CONSTANT TORQUE				Inverter operation Motor data 5:1 (60-12Hz) CONSTANT TORQUE				60HZ grid supply - Motor data										
Type	T_6	N_6	P_6		T_{12}	n_{12}	P_{12}		P_n		n	η	T_n	In 230V	In 460V	cosφ	Is/In	Jm	kVA Code Letter
	[lb·in]	[rpm]	[HP]	[kW]	[lb·in]	[rpm]	[HP]	[kW]	[HP]	[kW]	[rpm]	%	[lb·in]	[A]	[A]		p.u.	[lb·ft^2]	
BE 80B 4	36.3	125	0.072	0.054	36.3	305	0.176	0.131	1	0.75	1745	82.5	36.3	2.92	1.46	0.78	7.6	0.066	K
BE 90S 4	53.4	120	0.102	0.076	53.4	300	0.254	0.190	1.5	1.1	1740	84	53.4	4.50	2.25	0.73	7.7	0.066	L
BE 90LA 4	65.5	120	0.125	0.093	72.9	300	0.347	0.259	2	1.5	1740	84.5	72.9	6.20	3.10	0.73	7.1	0.081	K
BE 100LA 4	99.0	125	0.196	0.146	106.6	305	0.516	0.385	3	2.2	1745	87.5	106.6	8.40	4.20	0.76	7	0.128	J
BE 100LB 4	120.9	115	0.221	0.165	146.1	295	0.684	0.510	4	3	1735	87.5	146.1	11.80	5.90	0.76	7	0.145	K
BE 112M 4	145.8	130	0.301	0.224	178.7	310	0.879	0.655	5	3.7	1750	87.5	178.7	13.20	6.60	0.80	7.8	0.249	K
BE 132S 4	228.5	140	0.507	0.378	264.1	320	1.341	1.000	7.5	5.5	1760	89.5	264.1	18.60	9.30	0.83	8.7	0.641	K
BE 132MA 4	301.9	140	0.671	0.500	360.2	320	1.829	1.364	10	7.5	1760	89.5	360.2	25.40	12.70	0.83	8	0.757	K
BE 132MB 4	370.9	140	0.824	0.614	441.8	320	2.243	1.673	12.5	9.2	1760	90	441.8	31.20	15.60	0.82	8.3	0.854	K
BE 160M 4	451.1	145	1.038	0.774	526.7	325	2.716	2.025	15	11	1765	91	526.7	37.40	19	0.81	7.7	1.542	J
BE 160L 4	543.1	150	1.292	0.964	645.8	330	3.381	2.522	20	15	1770	90.5	716.3	51.00	25.5	0.81	7.1	1.875	J
BE 180M 4	663.6	145	1.527	1.139	789.2	325	4.070	3.035	25	18.5	1765	91.9	885.9	60.60	30.3	0.83	7.3	2.966	H
BE 180L 4	757.8	150	1.803	1.345	901.2	330	4.718	3.519	30	22	1770	92.5	1050.5	72.00	36.0	0.83	8.1	3.916	J

(F23)

INVERTER OPERATION - BN MOTORS TURN-DOWN DATA																			
4 pole 1800 min^{-1} S1	Inverter operation Motor data 10:1 (60-6Hz) CONSTANT TORQUE				Inverter operation Motor data 5:1 (60-12Hz) CONSTANT TORQUE				60HZ grid supply - Motor data										
Type	T_6	N_6	P_6		T_{12}	n_{12}	P_{12}		P_n		n	η	T_n	In 230V	In 460V	cosφ	Is/In	Jm	kVA Code Letter
	[lb·in]	[rpm]	[HP]	[kW]	[lb·in]	[rpm]	[HP]	[kW]	[HP]	[kW]	[rpm]	%	[lb·in]	[A]	[A]		p.u.	[lb·ft^2]	
BN 56A 4	3.0	50	0.0024	0.0018	3.0	230	0.011	0.008	0.08	0.06	1670	53	3.0	0.52	0.26	0.55	2.9	0.0036	J
BN 56B 4	4.1	50	0.0033	0.0024	4.5	230	0.017	0.012	0.12	0.09	1670	59	4.5	0.74	0.37	0.52	2.8	0.0036	H
BN 63A 4	5.1	30	0.0024	0.0018	6.1	210	0.020	0.015	0.16	0.12	1650	55	6.1	0.86	0.43	0.64	3.1	0.0048	H
BN 63B 4	7.2	50	0.0057	0.0043	9.4	230	0.034	0.026	0.25	0.18	1670	58	9.4	1.36	0.68	0.59	3.1	0.0055	H
BN 71A 4	9.5	80	0.012	0.009	12.2	260	0.050	0.038	0.33	0.25	1700	64	12.2	1.30	0.65	0.74	4.3	0.0138	H
BN 71B 4	14.3	80	0.018	0.014	18.5	260	0.076	0.057	0.5	0.37	1700	66	18.5	1.94	0.97	0.73	4.5	0.0164	H
BN 80A 4	21.7	90	0.031	0.023	27.6	270	0.12	0.088	0.75	0.55	1710	73	27.6	2.56	1.28	0.75	4.9	0.0356	H
BN 80B 4	28.8	100	0.046	0.03	36.6	280	0.16	0.12	1	0.75	1720	78	36.6	3.20	1.60	0.75	6.2	0.0482	J
BN 90S 4	40	100	0.063	0.05	47	280	0.21	0.16	1.5	1.1	1720	78	55	4.86	2.43	0.74	5.7	0.0499	J
BN 90LA 4	55	100	0.087	0.06	65	280	0.29	0.22	2	1.5	1720	81	73	6.24	3.12	0.74	6.6	0.0665	K
BN 90LB 4	65	100	0.103	0.08	77	280	0.34	0.26	2.5	1.85	1720	80.4	92	7.60	3.80	0.76	6.5	0.0712	K
BN 100LA 4	76	100	0.120	0.09	90	280	0.40	0.30	3	2.2	1720	81	110	9.6	4.8	0.73	5.5	0.096	H
BN 100LC 4	104	110	0.182	0.14	124	290	0.57	0.43	5	3.7	1730	84	182	15	7.5	0.74	5.6	0.145	K
BN 112M 4	147	110	0.257	0.19	175	290	0.81	0.60	5.5	4	1730	85	200	16	8	0.76	7.0	0.233	K
BN 132S 4	195	110	0.340	0.25	232	290	1.07	0.80	7.5	5.5	1730	84	273	20	10	0.84	6.3	0.506	H
BN 132MA 4	253	120	0.481	0.36	300	300	1.43	1.07	10	7.5	1740	85	362	26.2	13.1	0.84	6.1	0.641	H
BN 132MB 4	297	130	0.612	0.46	353	310	1.74	1.29	12.3	9.2	1750	86.4	443	33.0	16.5	0.81	6.8	0.757	J
BN 160MR 4	350	120	0.667	0.50	416	300	1.98	1.48	15	11	1740	88	543	38.8	19.4	0.81	6.5	0.855	H
BN 160L 4	488	130	1.007	0.75	581	310	2.86	2.13	20	15	1750	90	720	49.6	24.8	0.84	5.8	1.544	G
BN 180M 4	604	140	1.342	1.00	718	320	3.65	2.72	25	18.5	1760	90	895	62.6	31.3	0.83	5.8	1.88	G
BN 180L 4	699	140	1.552	1.16	831	320	4.22	3.15	30	22	1760	89.6	1074	78.0	39.0	0.79	6.8	2.97	H
BN 200L 4	879	140	1.954	1.46	1046	320	5.31	3.96	40	30	1760	90.5	1432	104.0	52.0	0.80	8.4	3.92	K

Key: T_6 Torque at 6 Hz — n_6 Speed at 6 Hz — P_6 Output power at 6 Hz
T_{12} Torque at 12 Hz — n_{12} Speed at 12 Hz — P_{12} Output power at 12 Hz

For information on turn-down data for BX motors please contact Bonfiglioli Technical Department

On self - ventilated motors (IC411) the cooling capacity may be impaired at frequencies lower than 60 Hz due to the lower speed, thus the allowed torque is decreased accordingly, as per the above tables. The use of thermal protective devices (see the options section in this catalogue) is strongly recommended when a 5:1 (or higher, up to 10:1) turn down is operated, in order to guarantee the motor safety in case of accidental overheating. For a more effective cooling, even at the lowest frequencies, motors equipped with a forced ventilation system (i.e. servo fan) may be also available - please contact the Bonfiglioli Technical Department for more details.
For the operation above the base frequency fb, upon reaching the maximum output voltage of the inverter, the motor enters a constant - power field of operation also called “field weakening” range, and the shaft torque drops with ratio f / fb. As the motor peak torque decreases with a ratio $(f / fb)^2$, the allowed overload capacity of the motor must be reduced progressively above a certain speed, depending on the motor.
The following Torque / Power Vs Frequency curves are for reference:

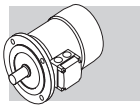

• Solid lines - theoretical curves (Torque: thin line; Power: thick line);
• Dashed lines - depending on the motor size, below the base frequency fb = 60 Hz, the torque capacity, as well as the motor power, may significantly decrease (see the above turn - down tables) due to the reduced cooling.
• Dotted line - theoretical torque values beyond the peak torque curve

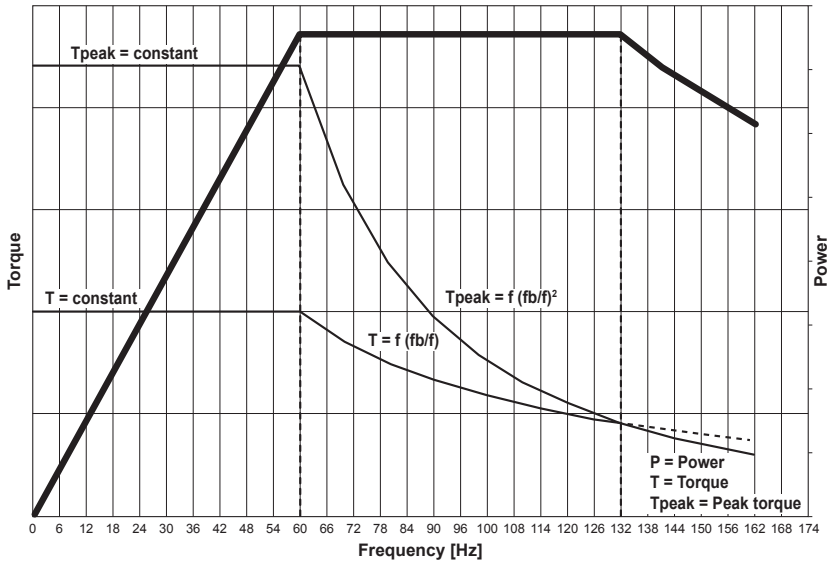

IMPORTANT NOTE: the reported turn - down data has been worked out on empirical basis and shall be considered as indicative, please contact Bonfiglioli Technical Department for more details.
The following table reports the mechanical speed limit for motors operating above the rated frequency:

(F24)

		n [rpm]		
		2p	**4p**	**6p**
≤ BE 112 - BN 112	**ME2, ME3 M05 ... M3**	5200	4000	3000
≥ BE 132 - BN 132	**ME4, ME5 M4, M5**	4500	4000	3000
BX 80 ... BX 180	**MX2 ... MX5**		4000	

Above the rated speed, mechanical vibrations and noise might occur on the rotating parts of the motor. Class B rotor balancing is highly recommended for these applications. A separate supply fan cooling may also be advisable. Remote-controlled fan and brake (if fitted) must always be connected directly to mains power supply.

M7.10 Permissible starts per hour, Z

The rating charts of brakemotors lend the permitted number of starts Z_0, based on 50% intermittence and for unloaded operation.
The catalogue value represents the maximum number of starts per hour for the motor without exceeding the rated temperature for the insulation class F.
To give a practical example for an application characterized by inertia J_c, drawing power P_r and requiring mean torque at start-up M_L the actual number of starts per hour for the motor can be calculated approximately through the following equation:

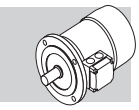

$$Z = \frac{Z_0 \cdot K_c \cdot K_d}{K_J} \qquad (02)$$

where:

$K_J = \frac{J_m + J_c}{J_m}$	inertia factor
$K_c = \frac{T_a - T_L}{T_a}$	torque factor
$K_d =$	load factor, see the following table

(F25)

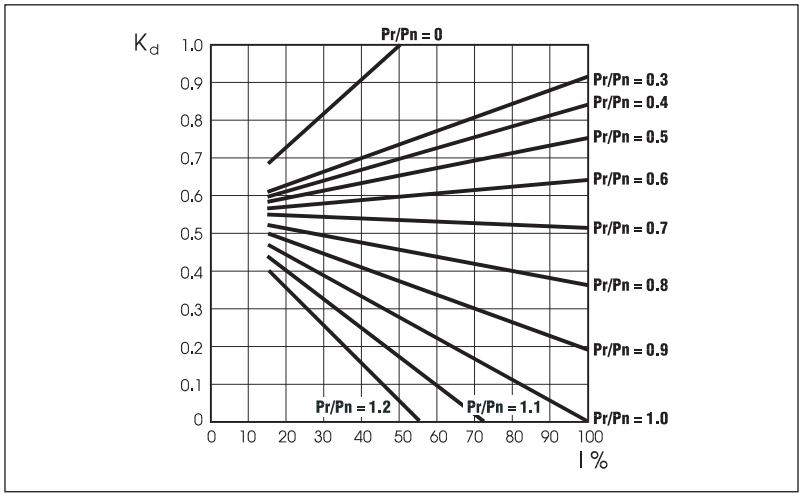

If actual starts per hour is within permitted value (Z) it may be worth checking that braking work is compatible with brake (thermal) capacity W_{max} also given in tables (F31), (F39) and dependent on the number of switches (c/h).

Bonfiglioli Riduttori

M8.1 Operation

Versions with incorporated brake use spring-applied DC (FD option) or AC (FA options) brakes.
All brakes are designed to provide fail-safe operation, meaning that they are applied by spring-action in the event of power failure.

(F26)

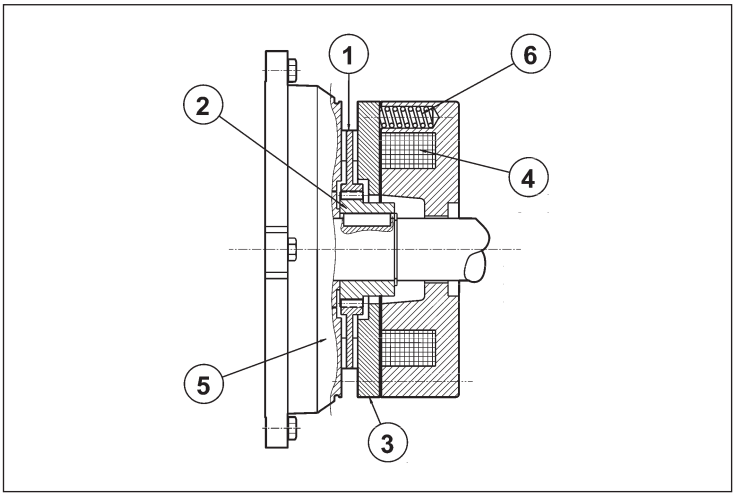

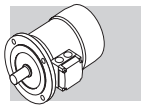

Key:
① brake disc
② disc carrier
③ pressure plate
④ brake coil
⑤ motor rear shield
⑥ brake springs

When voltage is interrupted, pressure springs push the armature plate against the brake disc.
The disc becomes trapped between the armature plate and motor shield and stops the shaft from rotation.
When the coil is energized, a magnetic field strong enough to overcome spring action attracts the armature plate, so that the brake disc – which is integral with the motor shaft – is released.

M8.2 Most significant features

- High braking torques (normally $T_b \approx 2\ T_n$), braking torque adjustment.
- Steel brake disc with double friction lining (low-wear, asbestos-free lining).
- Hexagonal seat on motor shaft fan end (N.D.E.) for manual rotation (not compatible with options PS, RC, TC, EN1, EN2, EN3, EN4, EN5, EN6).
- Manual release lever (options R and RM for BN_FD; option R for BN_FA).
- Corrosion-proof treatment on all brake surfaces.
- Insulation class F.

M9 DC BRAKE MOTORS TYPE BX_FD, BN_FD, MX_FD and M_FD

Frame sizes: BX 80 ... BX 180L - BN 63 … BN 200L / MX2SB ... MX5LA - M05 ... M5
BE/ME motors may be available equipped with the FD brake, for further information please contact our Technical Department.

(F27)

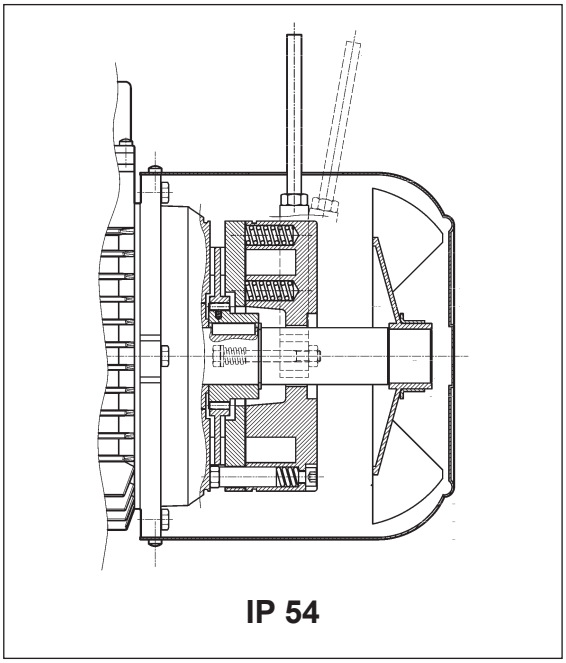

(F28)

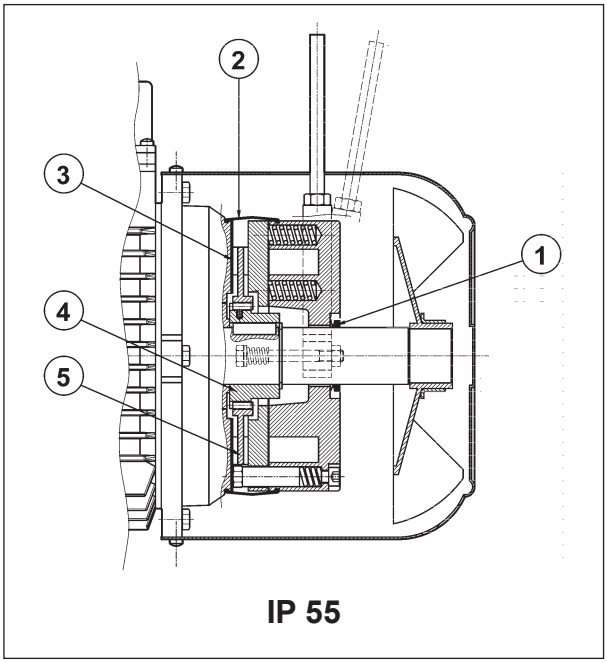

Direct current toroidal-coil electromagnetic brake bolted onto motor shield. Preloading springs provide axial positioning of magnet body.
Brake disc slides axially on steel hub shrunk onto motor shaft with anti-vibration device.
Brake torque factory setting is indicated in the corresponding motor rating charts. Braking torque may be modified by changing the type and/or number of springs.
At request, motors may be equipped with manual release lever with automatic return (**R**) or system for holding brake in the released position (**RM**).
See variant at paragraph “BRAKE RELEASE SYSTEMS” for available release lever locations.
FD brakes ensure excellent dynamic performance with low noise. DC brake operating characteristics may be optimized to meet application requirements by choosing from the various rectifier/power supply and wiring connection options available.
For applications involving lifting and/or high hourly energy dissipation, contact Bonfiglioli’s Technical Service.

M9.1 Degree of protection

Standard protection class is IP54.
Brake motor FD is also available in protection class **IP55**, which mandates the following variants:

① V-ring at N.D.E. of motor shaft
② dust and water-proof rubber boot
③ stainless steel ring placed between motor shieldand brake disc
④ stainless steel hub
⑤ stainless steel brake disc

M9.2 FD brake power supply

A rectifier accommodated inside the terminal box feeds the DC brake coil. Wiring connection across rectifier and brake coil is performed at the factory. On all single-pole motors, rectifier is connected to the motor terminal board. Rectifier standard power supply voltage VB is as indicated in the following table, regardless of mains frequency:

(F29)

2, 4, 6 P					**1 speed**
		_FD V_{mot} ± 10% 3 ~	V_B ± 10% 1 ~	brake connected to terminal board power supply	separate power supply
BX 80…BX 132 **BN 63…BN 132**	**MX2...MX4** **M05...M4LB**	230/400 V – 50 Hz	230 V	standard	specify **V_B SA** or **V_B SD**
BX 160…BX 180 **BN 160…BN 200**	**MX5** **M4LC...M5**	400/690 V – 50 Hz	400 V	standard	specify **V_B SA** or **V_B SD**

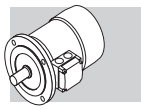

Switch-pole motors feature a separate power supply line for the brake with rectifier input voltage VB as indicated in the table below:

2/4, 2/6, 2/8, 2/12, 4/6, 4/8 P					**2 speed**
		_FD V_{mot} ± 10% 3 ~	V_B ± 10% 1 ~	brake connected to terminal board power supply	separate power supply
BN 63…BN 132	**M05...M4LB**	400 V – 50 Hz	230 V	⊖	specify **V_B SA** or **V_B SD**

The diode half-wave rectifier (VDC ≈ 0,45 x VAC) is available in versions **NB, SB, NBR** e **SBR**, as detailed in the table below:

(F30)

		brake	**standard**	**at request**
BN 63	**M05**	**FD 02**	**NB** 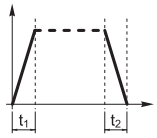	**SB** 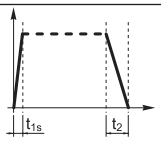
BN 71	**M1**	**FD 03** **FD 53**		
BX 80 - BN 80	**MX2 - M2**	**FD 04**		**SBR** 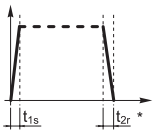
BX 90S - BN 90S	**—**	**FD 14**		
BX 90L - BN 90L	**—**	**FD 05**		**NBR** 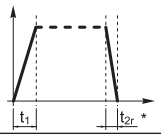
BX 100 - BN 100	**MX3 - M3**	**FD 15**		
—		**FD 55**	**SB** 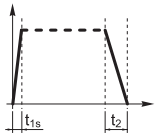	**SBR** 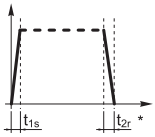
BX 112 - BN 112	**—**	**FD 06S**		
BX 132 - BN 132 - BN 160MR	**MX4 - M4**	**FD 56** **FD 06** **FD 07**		
BX 160 - BN 160L - BN 180M	**MX5 - M5**	**FD 08**		
BX 180 - BN 180L - BN 200M	**—**	**FD 09**		

(*) $t_{2c} < t_{2r} < t_2$

Rectifier **SB** with electronic energizing control over-energizes the electromagnet upon power-up to cut brake release response time and then switches to normal half-wave operation once the brake has been released.

Use of the **SB** rectifier is mandatory in the event of:
- high number of operations per hour
- reduced brake release response time
- brake is exposed to extreme thermal stress

Rectifiers **NBR** or **SBR** are available for applications requiring quick brake intervention (braking condition reinstatement) response.
These rectifiers complement the **NB** and **SB** types as their electronic circuit incorporates a static switch that de-energizes the brake quickly in the event voltage is missing.
This arrangement ensures short brake release response time with no need for additional external wiring and contacts.
Optimum performance of rectifiers **NBR** and **SBR** is achieved with separate brake power supply.
Versions available: 230Vac ±10%, 400Vac ± 10%, 50/60 Hz (with power supply); 100Vdc ±10%, 180Vdc ± 10% (with SD option).

M9.3 FD brake technical specifications

The table below reports the technical specifications of DC brakes FD.

(F31)

Brake	Brake torque T_b [lb•in] springs			Release		Braking		W_{max} per brake operation [lb•ft]			W	P
				t_1	$t_{1\,s}$	t_2	t_{2c}					
	6	4	2	[ms]	[ms]	[ms]	[ms]	10 s/h	100 s/h	1000 s/h	[lb•ft x10^6]	[W]
FD02	–	31	16	30	15	80	9	3320	1030	130	11	17
FD03	44	31	16	50	20	100	12	5160	1400	170	18	24
FD53	66	44	22	60	30	100	12					
FD04	133	89	44	80	35	140	15	7380	2290	260	22	33
FD14												
FD05	354	230	115	130	65	170	20	13300	3320	370	37	45
FD15	354	230	115	130	65	170	20					
FD55	487	328	159	–	65	170	20					
FD06S	531	354	177	–	80	220	25	14800	3540	410	52	55
FD56	–	664	328	–	90	250	20	21400	5460	590	59	65
FD06		886	443		100	250	20					
FD07	1329	886	443	–	120	200	25	29500	6860	740	96	65
FD08*	2210	1770	1510	–	140	350	30	44300	10300	1110	170	100
FD09**	3540	2660	1770	–	200	450	40	51600	11100	1250	170	120

* brake torque values obtained with 9, 7 and 6 springs, respectively

** brake torque values obtained with 12, 9 and 6 springs, respectively

t_1 = brake release time with half-wave rectifier
t_{1s} = brake release time with over-energizing rectifier
t_2 = brake engagement time with AC line interruption and separate power supply
t_{2c} = brake engagement time with AC and DC line interruption – Values for t_1, t_{1s}, t_2, t_{2c} indicated in the tab. (F30) are referred to brake set at maximum torque, medium air gap and rated voltage
W_{max} = max energy per brake operation
W = braking energy between two successive air gap adjustments
P_b = brake power absorption at 70 °F
T_b = static braking torque (±15%)
s/h = starts per hour

Bonfiglioli Riduttori

The brake pad wear depends on the operating/ambient conditions (temperature, humidity, angular speed, specific pressure); Therefore the declared wear rate must be considered as indicative.

M9.4 FD brake connections

On standard single-pole motors, the rectifier is connected to the motor terminal board at the factory. For switch-pole motors and where a separate brake power supply is required, connection to rectifier must comply with brake voltage VB stated in motor name plate.
Because the load is of the inductive type, brake control and DC line interruption must use contacts from the usage class AC-3 to IEC 60947-4-1.

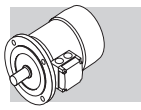

Table (F32) – Brake power supply from motor terminals and AC line interruption
Delayed stop time t_2 and function of motor time constants.
Mandatory when soft-start/stops are required.
Table (F33) – Brake coil with separate power supply and AC line interruption
Normal stop time independent of motor.
Achieved stop times t_2 are indicated in the table (F31).
Table (F34) – Brake coil power supply from motor terminals and AC/DC line interruption.
Quick stop with operation times t_{2c} as per table (F31).
Table (F35) – Brake coil with separate power supply and AC/DC line interruption.
Stop time decreases by values t_{2c} indicated in the table (F31).

The brake may be voltage supplied directly from the motor terminal box (from tab. F32 to tab. F35) only if the nominal voltage of the brake is the same as the smaller voltage of the motor.

(F32)

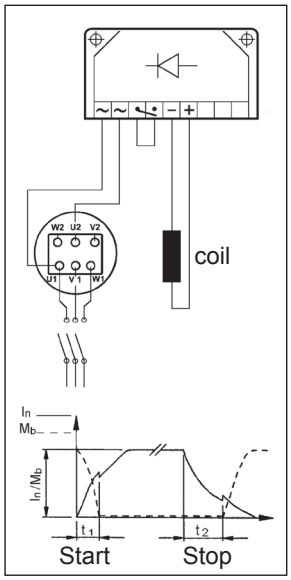

(F33)

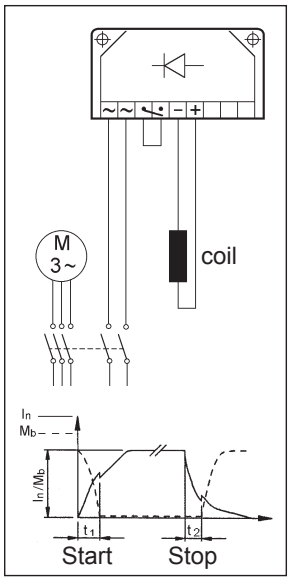

(F34)

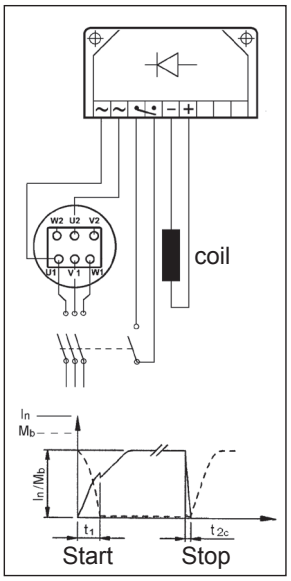

(F35)

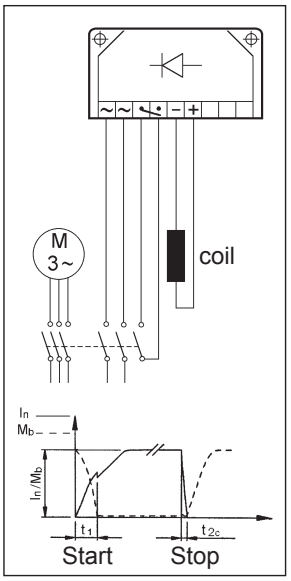

Frame sizes: BX 80 ... BX 160L - BN 63 … BN 180M / MX2SB ... MX5LA - M05 ... M5

(F36)

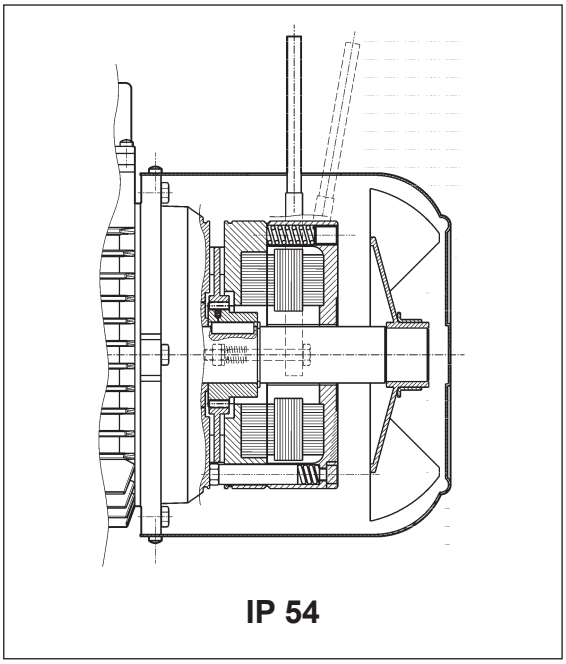

IP 54

(F37)

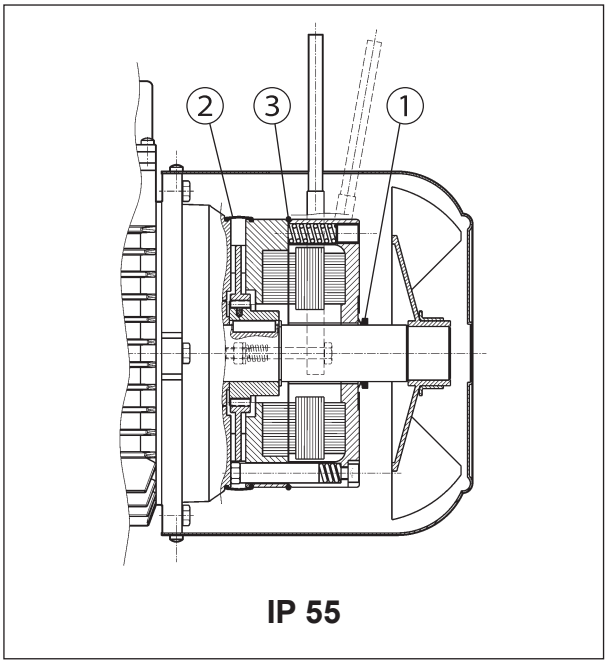

IP 55

Electromagnetic brake operates from three-phase alternated current power supply and is bolted onto conveyor shield. Preloading springs provide axial positioning of magnet body.
Steel brake disc slides axially on steel hub shrunk onto motor shaft with anti-vibration device.
Brake torque factory setting is indicated in the corresponding motor rating charts.
Spring preloading screws provide stepless braking torque adjustment.
Torque adjustment range is 30% $T_{bMAX} < T_b < T_{bMAX}$ (where T_{bMAX} is maximum braking torque as shown in tab. (F39).
Thanks to their high dynamic characteristics, FA brakes are ideal for heavy-duty applications as well as applications requiring frequent stop/starts and very fast response time.
Motors may be equipped with manual release lever with automatic return (R) at request. See variant at paragraph “BRAKE RELEASE SYSTEMS” for available release lever locations.
For applications involving lifting and/or high hourly energy dissipation, contact Bonfigliolis Technical Service.

M10.1 Degree of protection

Standard protection class is IP54.
Brake motor _FA is also available in protection class **IP55**, which mandates the following variants:

① V-ring at N.D.E. of motor shaft
② dust and water-proof rubber boot
③ O-ring

M10.2 FA brake power supply

In single speed motors, power supply is brought to the brake coil direct from the motor terminal box. As a result, brake voltage and motor voltage are the same. In this case, brake voltage indication may be omitted in the designation.
Switch-pole motors and motors with separate brake power supply feature an auxiliary terminal board with 6 terminals for connection to brake line. In both cases, brake voltage indication in the designation is mandatory.
The following table reports standard AC brake power supply ratings for single-pole motors:

(F38)

	BX 80…BX 132 BN 63…BN 132	BX 160 BN 160…BN 180
single-pole motor	230Δ / 400Y V ±10% – 50 Hz	400Δ/ 690Y V ±10% – 50 Hz
	265Δ / 460Y ±10% - 60 Hz	460Y – 60 Hz

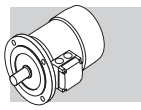

	BN 63…BN 132
switch-pole motors (separate power supply line)	230Δ / 400Y V ±10% – 50 Hz
	460Y - 60 Hz

Unless otherwise specified, standard brake power supply is 230Δ /400Y V - 50 Hz.
Special voltages in the 24…690 V, 50-60 Hz range are available at request.

M10.3 Technical specifications of FA brakes

(F39)

Brake	Brake torque T_b [lb•in]	Release t_1 [ms]	Braking t_2 [ms]	W_{max} [lb•ft] 10 s/h	100 s/h	1000 s/h	W [lb•ft x10^6]	P [VA]
FA 02	31	4	20	3320	1030	130	11	60
FA 03	66	4	40	5160	1400	170	18	80
FA 04 / **FA 14**	133	6	60	7380	2290	260	22	110
FA 05 / **FA 15**	354	8	90	13300	3320	370	37	250
FA 06S	531	16	120	14800	3540	410	52	470
FA 06	664	16	140	21400	5460	590	59	550
FA 07	1329	16	180	29500	6860	740	96	600
FA 08	2210	20	200	44300	10300	1110	170	1200

T_b = max static braking torque (±15%)
t_1 = brake release time
t_2 = brake engagement time
W_{max} = max energy per brake operation (brake thermal capacity)
W = braking energy between two successive air gap adjustments
P_b = power drawn by brake at 20° (50 Hz)
s/h = starts per hour

NOTE
Values t_1 and t_2 in the table refer to a brake set at rated torque, medium air gap and rated voltage.

The brake pad wear depends on the operating/ambient conditions (temperature, humidity, angular speed, specific pressure); Therefore the declared wear rate must be considered as indicative.

M10.4 FA brake connections

The following diagram shows the wiring when brake is connected directly to same power supply of the motor:

(F40)

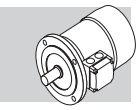

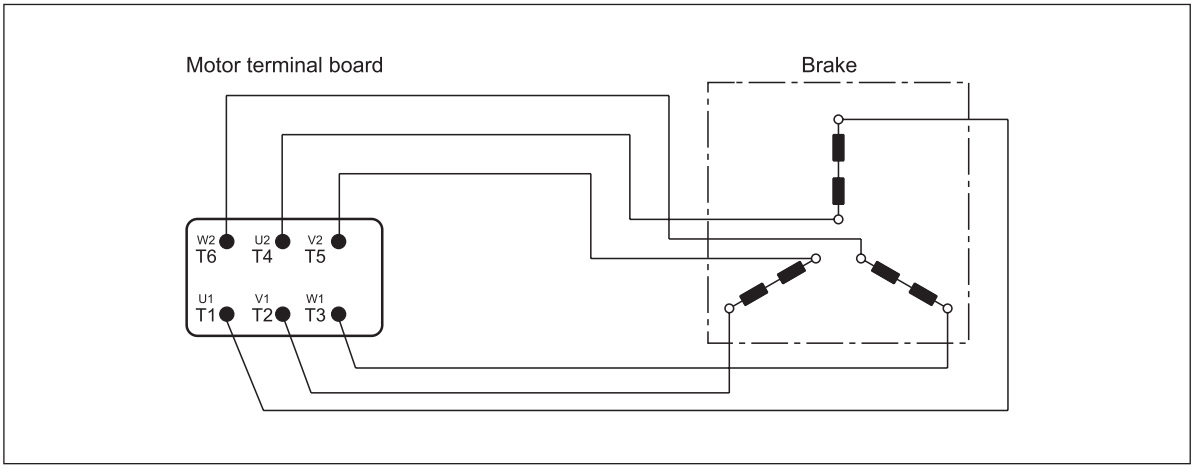

Switch-pole motors and, at request, single-pole motors with separate power supply are equipped with an auxiliary terminal board with 6 terminals for brake connection.
In this version, motors feature a larger terminal box. See diagram below:

(F41)

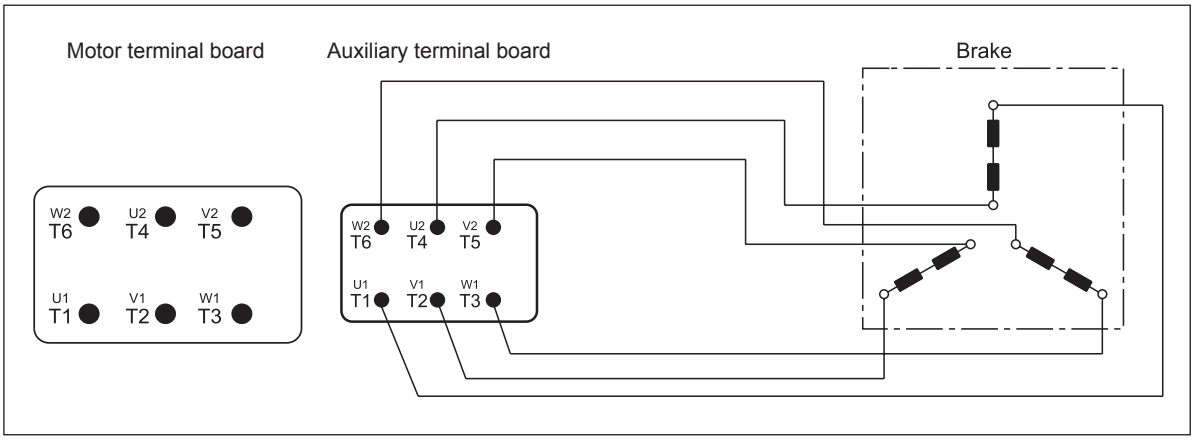

(F42)

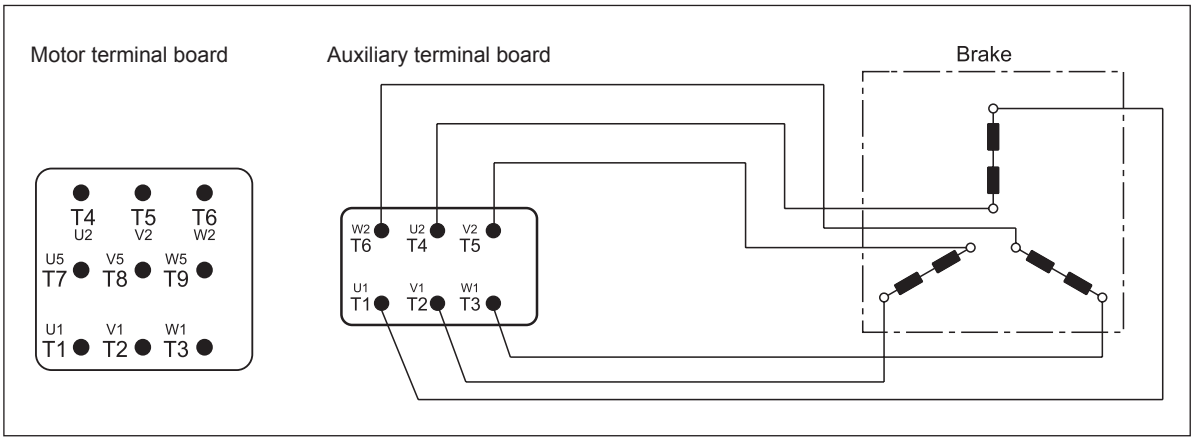

M11 BRAKE RELEASE SYSTEMS

Spring-applied brakes type FD and FA may be equipped with optional manual release devices. These are typically used for manually releasing the brake before servicing any machine or plant parts operated by the motor.

R

(F43)

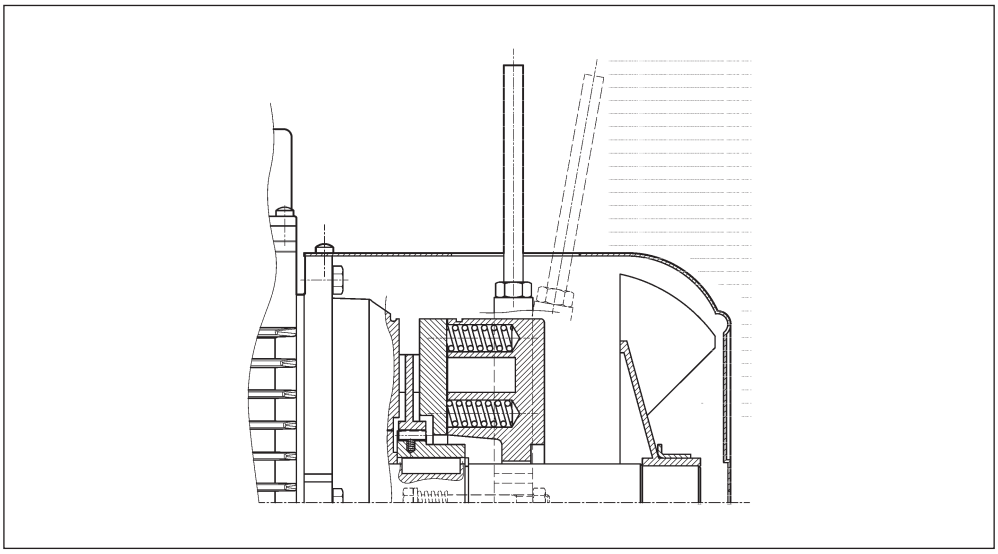

A return spring brings the release lever back in the original position.

RM

(F44)

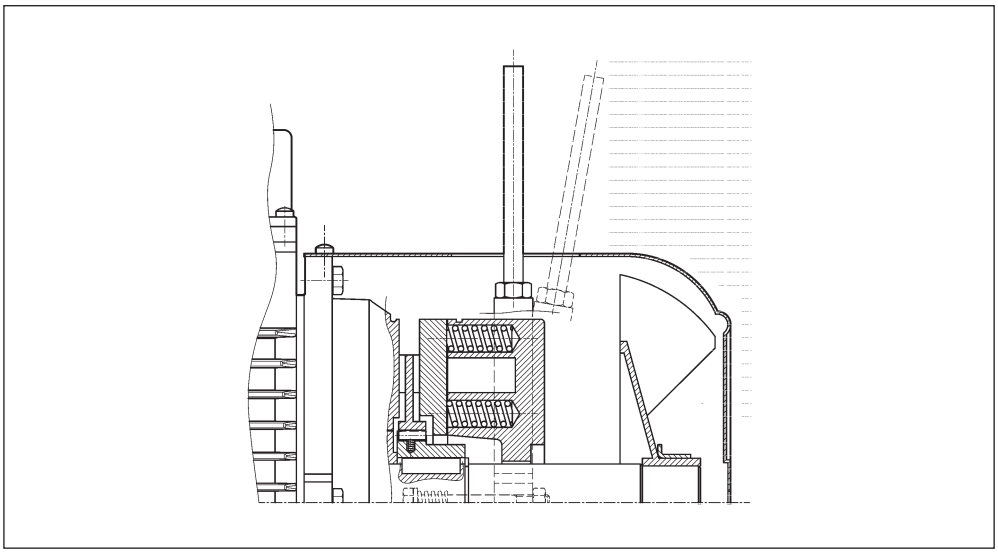

On motors type _FD, if the option RM is specified, the release device may be locked in the ”release” position by tightening the lever until its end becomes engaged with a brake housing projection.
The availability for the various disengagement devices is charted here below:

(F45)

	R	RM
BX_FD BE_FD BN_FD	BX 80 ... BX 180 BX 200K ... BX 315K BE 63 ... BE 180L BN 63 ... BN 200	BX 80 ... BX 132 BE 63 ... BE 132 BN 63 ... BN 132 ⛔ FD07
MX_FD ME_FD M_FD	MX2 ... MX5 ME05 ... ME5 M05 ... M5	MX2 ... MX4 ME05 ... ME4 M05 ... M4LA
BX_FA BE_FA BN_FA	BX 80 ... BX 160 BE 63 ... BE 160L BN 63 ... BN 180M	⛔
MX_FA ME_FA M_FA	MX2 ... MX5 ME05 ... ME5 M05 ... M5	⛔

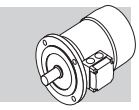

M11.1 Release lever orientation

Unless otherwise specified, the release lever is located 90° away from the terminal box – identified by letters [**AB**] in the diagram below – in a clockwise direction on both options **R** and **RM**.
Alternative lever positions [**AA**], [**AC**] and [**AD**] are also possible when the corresponding option is specified:

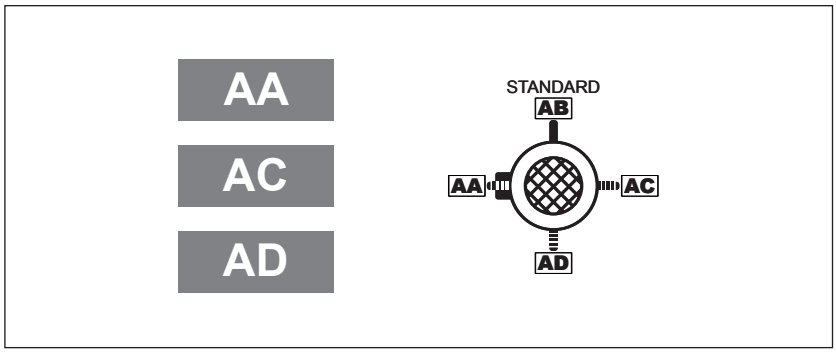

M11.2 Separate brake supply

...SA

The brake coil is directly fed through an independent line, separately from the motor.
In this case the rated voltage for the coil must be specified, e.g.230SA. The option is applicable to all motors with brake type FD and FA.

...SD

The brake coil is directly fed with DC current and the rectifier is out of the scope for supply.
The rated voltage for the coil must be specified, e.g. 24SD.

Bonfiglioli Riduttori

M12 OPTIONS

M12.1 Soft-start / stop

F1

An optional flywheel - option F1 - is available for applications requiring soft starting or stopping. The flywheel's added inertia uses up kinetic energy during starting and returns it back during braking, thus catering for more progressive and gradual shock loads. The optional flywheel is available for brake motors type BN_FD with specific characteristics as detailed in the table below:

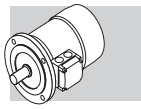

Main data for flywheel of motore type: BN_FD, M_FD			
		Fly-wheel weight [lbs]	**Fly-wheel inertia** [lb•ft^2] x 10^{-5}
BN 63	**M05**	0.31	2.7
BN 71	**M1**	0.51	5.7
BN 80	**M2**	0.76	11.4
BN 90 S - BN 90 L	**–**	1.14	22.3
BN 100	**M3**	1.58	35.4
BN 112	**–**	2.19	62.4
BN 132 S - BN 132 M	**M4**	2.81	108.6

M12.2 Capacitive filter

CF

An optional capacitive filter is available for DC brake motors type BN_FD only. When the suitable capacitive filter is installed upstream of the rectifier (option CF), motors comply with the emission limits required by standard EN61000-6-3:2007" Electromagnetic Compatibility – Generic Emission Standard – Part 6-3: Residential, commercial and light industrial environment".

M12.3 Thermal protective devices

In addition to the standard protection provided by the magneto-thermal device, motors can be supplied with built-in thermal probes to protect the winding against overheating caused, by insufficient ventilation or by an intermittent duty.
This additional protection should always be specified for servoventilated motors (IC416).

M12.4 Thermistors

E3

These are semi-conductors having rapid resistance variation when they are close to the rated switch off temperature 302 °F (150 °C). Variations of the R = f(T) characteristic are specified under DIN 44081, IEC 34-11 Standards. Positive temperature coefficient thermistors are normally used (also known as PTC "cold conductor resistors"). Thermistors cannot control relays directly and must be connected to a suitable disconnect device. Thus protected, three PTCs connected in series are installed in the winding, the terminals of which are located on the auxiliary terminal-board.

K1

The design characteristics of this sub-group of PTC thermistors allow them to be used as positive temperature coefficient sensors with variable resistance.
Functioning temperature range: 32 °F ... +500 °F (0°C ... +260°C).
Thermistors cannot control relays directly and must be connected to a suitable disconnect device.
Terminals (polarised) for 1 x KTY 84-130 are provided on an auxiliary terminal strip.

M12.5 Bimetallic thermostates

D3

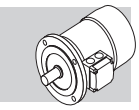

These types of protective devices house a bimetal disk. When the rated switch off temperature 302 °F (150 °C) is reached, the disk switches the contacts from their initial rest position.
As temperature falls, the disk and the contacts automatically return to rest position.
Three bimetallic thermostates connected in series are usually employed, with normally closed contacts. The terminals are located on an auxiliary terminal-board.

M12.6 Plug connector

CON

Three types of connectors (CON 1, CON 2, CON 3) are provided; they can be mounted in two different positions: right side of terminal box cover (C1D, C2D, C3D); left side of terminal box cover (C1S, C2S, C3S).
The option CON is applicable to single speed BN and M motors (2, 4, 6, 8 poles), and BX / BE and MX / ME motors on the sizes specified on the following table. All double speed motors are excluded.
The connectors CON 1 / CON 2 are available for BX-BE/MX-ME and BN/M motors without brake and for brakemotors equipped with DC brake type FD, for the motor sizes listed below.
The male connector (with pins) is mounted on the motor, the female connector is not provided.
With CON option, the winding connection is always Y.
With option U1 “forced ventilation”, the fan unit supply is available inside the separate terminal box fixed to fan cover.
With options EN1...EN6, the encoder connection is made by a cable not connected to the motor plug connector.
The CON option is not applicable to brakemotors equipped with AC brake type FA.
The CON option is not available when at least one of the next options are selected: the U2, CUS, IC.

Specifications

(F47)

Option	CON 1
Motor size	**BX 80 ... BX 112 / MX2, MX3 / BE 63 ... BE 112 / ME05 ... ME4 BN 63 … BN 112 / M05 ... M3**
Connector view	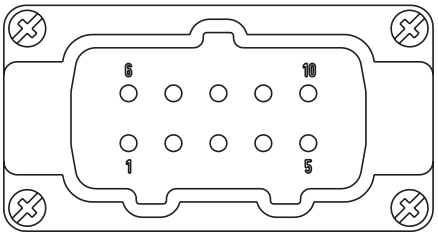
Type of connector	Harting Han 10ES
Housing	Han EMC 10B with 2 levers
Numbers of pins - nominal current	10 x 16A
Voltage	500 Vac
Contact connection	Screw terminals

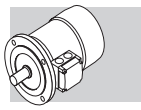

(F48)

Option	CON 2
Motor size	**BX 80 ... BX 132 / MX2, MX3 / BE 63 ... BE 132 / ME05 ... ME4 BN 63 … BN 160MR / M05 ... M4**
Connector view	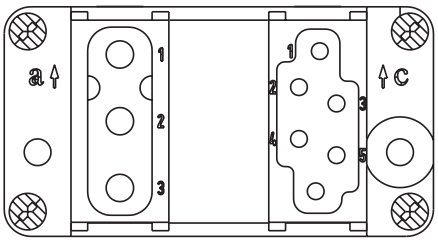
Type of connector	Harting Han Modular
Housing	Han EMC 10B with 2 levers
Module type	Module C + Module E + Module E
Numbers of pins - nominal current	3 x 36A / 6 x 16A
Voltage	500 Vac
Contact connection	Crimping contacts

(F49)

Option	CON 3
Motor size	**BX 80 ... BX 132M / MX2, MX3 / BE 63 ... BE 132 / ME05 ... ME4 / BN 63 … BN 160MR / M05 ... M4**
Connector view	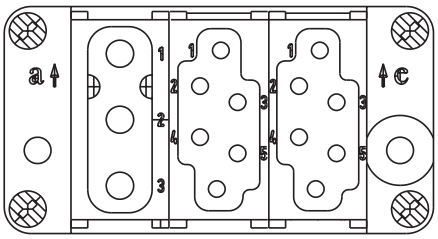
Type of connector	Harting Han Modular
Housing	Han EMC 10B with 2 levers
Module type	Module C + Module E + Module E
Numbers of pins - nominal current	3 x 36A / 6 + 6 x 16A
Voltage	500 Vac
Contact connection	Crimping contacts

(F50)

Connector orientation

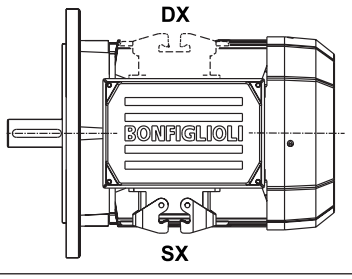

(F51)

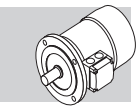

Motors without brake dimensions

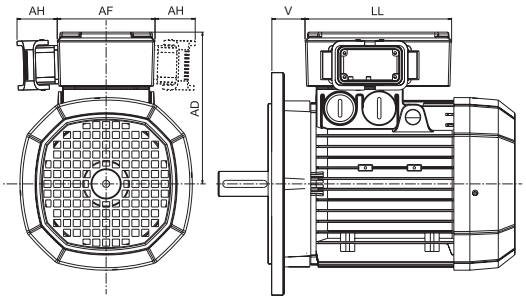

		AD [*mm* / inch]	AF [*mm* / inch]	AH [*mm* / inch]	LL [*mm* / inch]	V(*) [*mm* / inch]
BN 63	**M05**	*136* / 5.354	*110* / 4.330	*45* / 1.771	*165* / 6.496	*4.5* / 0.177
BN 71	**M1**	*149* / 5.866	*110* / 4.330	*45* / 1.771	*165* / 6.496	*15.5* / 0.610
BX 80 - BE 80 - BN 80	**MX2 - ME2 - M2**	*160* / 6.299	*110* / 4.330	*45* / 1.771	*165* / 6.496	*16.5* / 0.649
BX 90 - BE 90 - BN 90	**MX3**	*162* / 6.377	*110* / 4.330	*45* / 1.771	*165* / 6.496	*31.5* / 1.240
BX 100 - BE 100 - BN 100	**MX3 - ME3 - M3**	*171* / 6.732	*110* / 4.330	*45* / 1.771	*165* / 6.496	*37.5* / 1.476
BX 112 - BE 112 - BN 112	**MX4**	*186* / 7.322	*110* / 4.330	*45* / 1.771	*165* / 6.496	*39* / 1.535
BX 132 - BE 132 - BN 132	**MX4 - ME4 - M4**	*210* / 8.267	*140* / 5.511	*45* / 1.771	*188* / 7.401	*45.5* / 1.791
BN 160MR	**–**	*210* / 8.267	*140* / 5.511	*45* / 1.771	*188* / 7.401	*161* / 6.338

(*) Dimension valid only for motors BX, BE and BN.

(F52)

Motors with FD brake dimensions

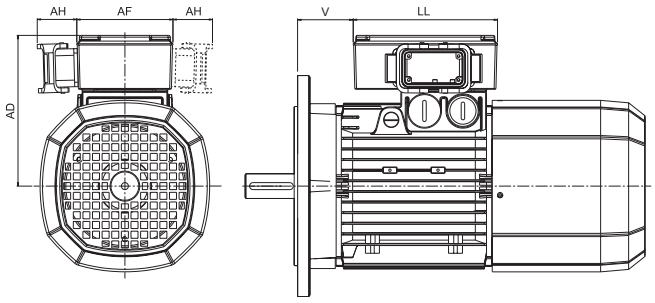

		AD [*mm* / inch]	AF [*mm* / inch]	AH [*mm* / inch]	LL [*mm* / inch]	V(*) [*mm* / inch]
BN 63	**M05**	*136* / 5.354	*110* / 4.330	*45* / 1.771	*165* / 6.496	*4.5* / 0.177
BN 71	**M1**	*149* / 5.866	*110* / 4.330	*45* / 1.771	*165* / 6.496	*1.5* / 0.059
BX 80 - BN 80	**MX2 - M2**	*160* / 6.299	*110* / 4.330	*45* / 1.771	*165* / 6.496	*18.5* / 0.728
BX 90 - BN 90	**—**	*162* / 6.377	*110* / 4.330	*45* / 1.771	*165* / 6.496	*39.5* / 1.555
BX 100 - BN 100	**MX3 - M3**	*171* / 6.732	*110* / 4.330	*45* / 1.771	*165* / 6.496	*63.5* / 2.500
BX 112 - BN 112	**—**	*186* / 7.322	*110* / 4.330	*45* / 1.771	*165* / 6.496	*75* / 2.952
BX 132 - BN 132	**MX4 - M4**	*210* / 8.267	*140* / 5.511	*45* / 1.771	*188* / 7.401	*122* / 4.803
BN 160MR	**—**	*210* / 8.267	*140* / 5.511	*45* / 1.771	*188* / 7.401	*161* / 6.338

(*) Dimension valid only for motors BN.and BX

M12.7 Control of brake operation

MSW

The microswitch can be set in order to obtain from it a signal related to the attraction/release of anchor plate, or it can be set in order to give feedback when the air gap reaches the maximum value.
MSW option is available for brakes FD03...FD09.
The microswitch is provided with three lead wires (NC, NO, COM). The next figure shown the main components of the brake equipped with microswitch.

(F53)

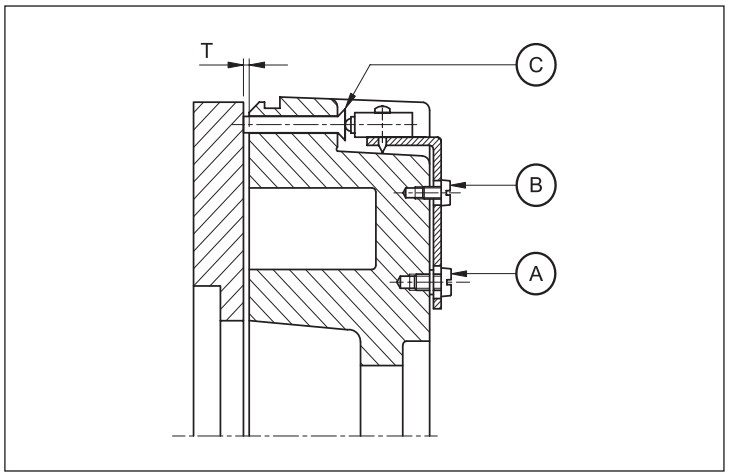

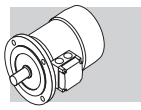

A: Plate fixing screws
B: Setting screws
C: Actuator control pin

M12.8 Additional cable entry for brakemotors

IC

The terminal box cover of brakemotors BN63...BN160MR / M05...M4 is provided with two additional cable entry M16 x 1.5 (one cable entry per side).
The terminal box cover of brakemotors BN160...BN200 / M5 is provided with an additional cable entry M16 x 1.5 next to the cable entry used for the brake.

M12.9 Anti-condensation heaters

NH1 **H1**

Where an application involves high humidity or extreme temperature fluctuation, motors may be equipped with an anti-condensate heater.
A single-phase power supply is available in the auxiliary terminal board inside the main terminal box.
Values for the absorbed power are listed here below:

(F54)

	H1	NH1
	1~ 230V ± 10% P [W]	1~ 115V ± 10% P [W]
BX 80 **BE 80** **BN 56 ... BN 80**	10	10
BX 90 ... BX 132 **BE 90 ... BE 132MB** **BN 90 ... BN 160MR**	25	25
BX 160, BX 180 **BE 160, BE 180** **BN 160, BN 200**	50	50

Warning!

Always remove power supply to the anti-condensante heater before operating the motor.

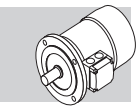

M12.10 Tropicalization

TP

When option **TP** is specified, motor windings receive additional protection for operation in high humidity and temperature conditions.

M12.11 Second shaft extension

PS

This option is not compatible with variants RC, TC, EN1, EN2, EN3, EN4, EN5, EN6.
For shaft dimensions please see motor dimensions tables.

(F55)

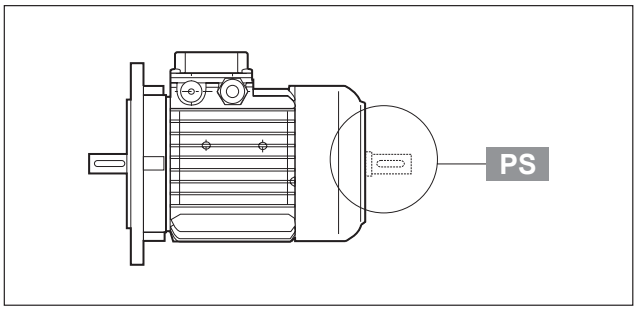

M12.12 Backstop device

AL **AR**

For applications where backdriving must be avoided, motors equipped with an anti run-back device can be used (available for the MX, ME and M series only). While allowing rotation in the direction required, this device operates instantaneously in case of a power failure, preventing the shaft from running back. The anti run-back device is life lubricated with special grease for this specific application. When ordering, customers should indicate the required rotation direction, AL or AR. Never use the anti run-back device to prevent reverse rotation caused by faulty electrical connection. Table (F56) shows rated and maximum locking torques for the anti run-back devices. A diagram of the device can be seen in Table (F57). Overall dimensis are same as the corresponding brake motor. The direction of free rotation is described in the “MOTOR OPTIONS” section of specifically dedicated sections to gear units.

(F56)

	Rated locking torque [lb•in]	Max. locking torque [lb•in]	Release speed [rpm]
M1	53	90	750
ME2 M2	140	240	650
ME3 M3	480	815	520
MX4 - ME4 M4	970	1815	430

(F57)

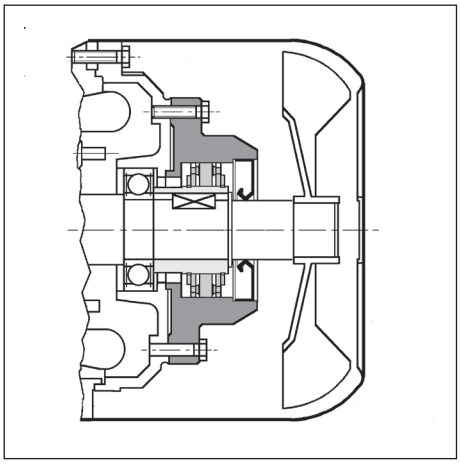

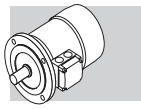

M12.13 Rotor balancing

RV

Where low noise is a priority requirement, the option RV ensures reduced vibration in accordance with vibration class B.
The table below reports effective velocity of vibration for normal (A) and B grade balancing.

(F58)

Vibration level	Angular velocity n [rpm]	Limits of the vibration velocity (mm/s) **BX 80 ≤ H ≤ BX 180L BE 80 ≤ H ≤ BE 180L BN 56 ≤ H ≤ BN 200**
A	600 < n < 3600	1.6
B	600 < n < 3600	0.70

Values are obtained from measurements on freely suspended motor during noload operation; tolerance ±10%.

M12.14 Ventilation

Motors are cooled through outer air blow (IC 411 according to CEI EN 60034-6) and are equipped with a plastic radial fan, which operates in both directions.
Ensure that fan cover is installed at a suitable distance from the closest wall so to allow air circulation and servicing of motor and brake, if fitted.
On request, motors can be supplied with independently power-supplied forced ventilation system starting from BN 71, M1, BE 80, ME2, BX 80 and MX2 size.
Motor is cooled by an axial fan with independent power supply and fitted on the fan cover (IC 416 cooling system).
This version is used in case of motor driven by inverter so that steady torque operation is possible even at low speed or when high starting frequencies are needed.
Brake motors of motors with rear shaft projection (PS option) are excluded.

This variant has two different models, called **U1** and **U2**, having the same longitudinal size. Longer side of fan cover (**DL**) is specified for both models in the table below. Overall dimension can be reckoned from motor size table.

(F59)

Extra length for servoventilated motors			
		Δ L_1 [*mm* / inch]	**Δ L_2** [*mm* / inch]
BN 71	**M1**	*93* / 3.661	*32* / 1.260
BX 80 - BE 80 - BN 80	**MX2 - ME2 - M2**	*127* / 5.000	*55* / 2.165
BX 90 - BE 90 - BN 90	**MX3**	*131* / 5.157	*48* / 1.890
BX 100 - BE 100 - BN 100	**MX3 - ME3 - M3**	*119* / 4.685	*28* / 1.102
BX 112 - BE 112 - BN 112	**MX4**	*130* / 5.118	*31* / 1.220
BX 132 - BE 132 - BN 132	**MX4 - ME4 - M4**	*161* / 6.339	*51* / 2.008
BX 160 - BE 160, BX 180 - BE 180	**MX5 - ME5**	*184* / 7.244	—

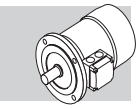

ΔL_1 = extra length to LB value of corresponding standard motor.

ΔL_2 = extra length to LB value of corresponding brake motor.
Only for BN motors.

U1

Fan wiring terminals are housed in a separate terminal box.
In brake motors of size BX 132 ... BX 160, BE 80 ... BE 160, MX 4 ... MX 5, ME 2 ... ME 5 - BN 71 ... BN 160MR, M1 ... M4L, with **U1** model, the release lever cannot be positioned to AA.
The option is not applicable to motors compliant with the CSA and UL norms (option CUS).

(F60)

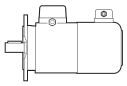

		V a.c. ±10%	**Hz**	**P** [W]	**I** [A]
BN 71	**M1**	1 ~ 230	50 / 60	22	0.12
BX 80 - BE 80 **BN 80**	**MX2 - ME2** **M2**			22	0.12
BX 90 - BE 90 **BN 90**	**MX3**			40	0.30
BX 100 - BE 100 **BN 100**	**MX3 - ME3** **M3**			50	0.25
BX 112 - BE 112 **BN 112**	**MX4**	3 ~ 230Δ / 400Y		50	0.26 / 0.15
BX 132 - BE 132 **BN 132 ... BN 160MR**	**MX4 - ME4** **M4L**			110	0.38 / 0.22
BX 160 - BE 160 **BN 160M ... BN 180M**	**MX5 - ME5** **M5**		50	180	1.25 / 0.72
BX 180 - BE 180 **BN 180L ... BN 200L**	**–**			250	1.51 / 0.87
BX 200 ... BX 250 **BX 200K ... BX 250K**	**–**	3 ~ 400Δ / 690Y		250	0.64
BX 280 ... BX 315M **BX 280K ... BX 315MK**	**–**			750	1.7
BX 315 ... BX 355S **BX 315LK ... BX 355SK**	**–**			1500	3.3
BX 355M **BX 355MK**	**–**			3000	6.1

U2

Fan terminals are wired in the motor terminal box.
The **U2** option does not apply to motors BX, BE, MX, ME and to motors with option CUS (compliant to norms CSA and UL).

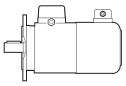

(F61)

		V a.c. ±10%	Hz	P [W]	I [A]
BN 71	**M1**	1 ~ 230	50 / 60	22	0.12
BN 80	**M2**			22	0.12
BN 90	**–**			40	0.30
BN 100	**M3**	3 ~ 230Δ / 400Y		40	0.26 / 0.09
BN 112	**–**			50	0.26 / 0.15
BN 132 ... BN 160MR	**M4L**			110	0.38 / 0.22

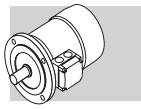

M12.15 Rain canopy

RC

The rain canopy protects the motor from dripping and avoids the ingress of solid bodies. It is recommended when motor is installed in a vertical position with the shaft downwards.
Relevant dimensions are indicated in the table below.
The drip cover is not compatible with variants PS, EN1, EN2, EN3, EN4, EN5, EN6.

(F62)

		AQ [*mm* / inch]	ΔV [*mm* / inch]
BN 63	**M05**	*118* / 4.646	*24* / 0.945
BN 71	**M1**	*134* / 5.276	*27* / 1.063
BX 80 - BE 80 **BN 80**	**MX2 - ME2** **M2**	*152* / 5.984	*25* / 0.984
BX 90 - BE 90 **BN 90**	**MX3**	*168* / 6.614	*30* / 1.181
BX 100 - BE 100 **BN 100**	**MX3 - ME3** **M3**	*190* / 7.480	*28* / 1.102
BX 112 - BE 112 **BN 112**	**MX4**	*211* / 8.307	*32* / 1.260
BX 132 - BE 132 **BN 132...BN 160MR**	**MX4 - ME4** **M4**	*254* / 10.000	*32* / 1.260
BX 160 - BE 160 **BN 160M...BN 180M**	**MX5 - ME5** **M5**	*302* / 11.890	*36* / 1.417
BX 180 - BE 180 **BN 180L...BN 200L**	**—**	*340* / 13.386	*36* / 1.417

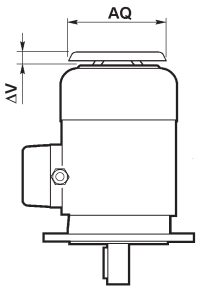

M12.16 Textile canopy

TC

Option TC is a cover variant for textile industry environments, where lint may obstruct the fan grid and prevent a regular flow of cooling air.
This option is not compatible with variants EN1, EN2, EN3, EN4, EN5, EN6, PS.
Overall dimensions are the same as drip cover type RC.

M12.17 Feedback units

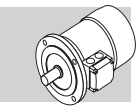

Motors may be combined with six different types of encoders to achieve feedback circuits.
Configurations with double-extended shaft (PS) and rain canopy (RC, TC) are not compatible with encoder installation.

EN1

Incremental encoder, V_{IN} = 5 V, line-driver output RS 422.

EN2

Incremental encoder, V_{IN} = 10-30 V, line-driver output RS 422.

EN3

Incremental encoder, V_{IN} = 12-30 V, push-pull output 12-30 V

EN4

Encoder sin/cos, V_{IN} = 4.5-5.5 V, output Sinus 0.5V_{PP}.

EN5

Absolute encoder singleturn, HIPERFACE® interface, V_{IN} = 7-12 V.

EN6

Absolute encoder multiturn, HIPERFACE® interface, V_{IN} = 7-12 V.

(F63)

		EN1	EN2	EN3	EN4	EN5	EN6
Interface		TTL/RS 422	TTL/RS 422	HTL/push-pull	Sinus 0.5 VPP	HIPERFACE®	HIPERFACE®
Power supply voltage	[V]	4...6	10...30	12...30	4.4...5.5	7...12	7...12
Output voltage	[V]	5	5	12...30	—	—	—
No-load operating current	[mA]	120	100	100	40	80	80
No. of pulses per revolution		1024					
Steps per revolution		—	—	—	—	15 bit	15 bit
Revolutions		—	—	—	—	—	12 bit
No. of signals		6 (A, B, Z + inverted signals)			6 (cos-, cos+, sin-, sin+, Z, $\overline{Z}$)	—	—
Max. output frequency	[kHz]	600			200		
Max. speed	[rpm]	6000 (9000 rpm for 10 s)					
Temperature range	[°F]	-20 ... +210					
Protection class		IP 65					

Bonfiglioli Riduttori

(F64)

EN1, EN2, EN3, EN4, EN5, EN6

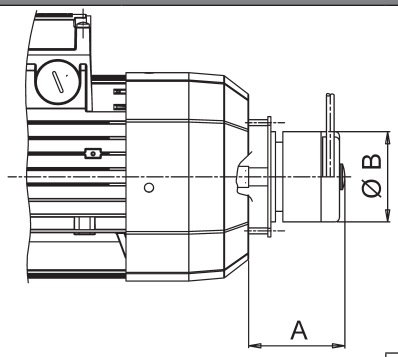

		A [*mm* / inch]	B [*mm* / inch]
BX 80 ... BX 180L **BE 80 ... BE 180L**	**MX2 ... MX5L** **ME2S ... ME5L**	*65* / 2.559	*59* / 2.323
BN 63 ... BN 200L	**M05 ... M5**		
BX 80_FD ... BX 180_FD **BN 63_FD ... BN 200L_FD**	**MX2_FD ... MX5_FD** **M05_FD ... M5_FD**		
BX 80_FA ... BX 160_FA **BN 63_FA ... BN 200L_FA**	**MX2_FA ... MX5_FA** **M05_FA ... M5_FA**		

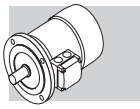

(F65)

EN_ + U1

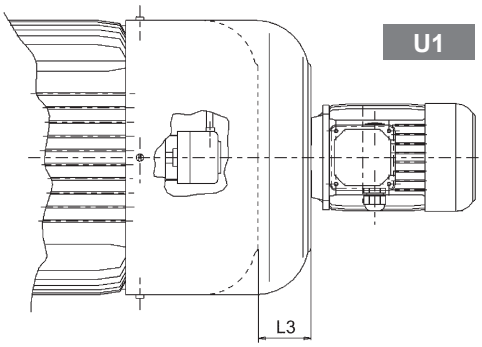

		L3 [*mm* / inch]
BX 160 - BE 160 - BN 160M...BN 180M	**MX5 - ME5 - M5**	*72* / 2.835
BX 180 - BE 180 - BN 180L...BN 200L	**–**	*82* / 3.228
BX 160_FD - BN 160M_FD...BN 180M_FD	**MX5_FD - M5_FD**	*35* / 1.378
BX 180_FD - BN 180L_FD...BN 200L_FD	**–**	*41* / 1.614

If the encoder device (option EN_) is specified on motors BX 80 ... BX 132 - MX2 ... MX4 - BE 80 ... BE 132 - ME2 ... ME4 - BN 71 ... BN 160MR - M1 ... M4, along with the independent fan cooling (options U1, U2), the extra length of motor is coincident with that of the correspondent U1 and U2 execution.

M12.18 Surface protection

C_

When no specific protection class is requested, the painted (ferrous) surfaces of motors are protected to at least corrosivity class C2 (UNI EN ISO 12944-2). For improved resistance to atmospheric corrosion, motors can be delivered with C3 and C4 surface protection.

(F66)

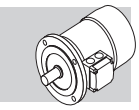

SURFACE PROTECTION	Typical environments	Maximum surface temperature	Corrosivity class according to UNI EN ISO 12944-2
C3	Urban and industrial environments with up to 100% relative humidity (medium air pollution)	**120°C [248 F°]**	**C3**
C4	Industrial areas, coastal areas, chemical plant, with up to 100% relative humidity (high air pollution)	**120°C [248 F°]**	**C4**

Motors with optional protection to class C3 or C4 are available in a choice of colours. If no specific colour is requested (see the “PAINTING” option) motors are finished in RAL 7042.
Motors can also be supplied with surface protection for corrosivity class C5 according to UNI EN ISO 12944-2. Contact our Technical Service for further details.

M12.19 Painting

RAL

Gearboxes with optional protection to class C3 or C4 are available in the colours listed in the following table.

PAINTING	Colour	RAL number
RAL7042*	Traffik Grey A	7042
RAL5010	Gentian Blue	5010
RAL9005	Jet Black	9005
RAL9006	White Aluminium	9006
RAL9010	Pure White	9010
RAL7035	Light Grey	7035
RAL7001	Silver Grey	7001
RAL5015	Sky Blue	5015
RAL7037	Dusty Grey	7037
RAL5024	Pastel Blue	5024

* Gearboxes are supplied in this standard colour if no other colour is specified.

NOTE – “PAINTING” options can only be specified in conjunction with “SURFACE PROTECTION” options.

M12.20 Certificates

ACM

Certificate of compliance of motors

The document certifies the compliance of the product with the purchase order and the construction in conformity with the applicable procedures of the Bonfiglioli Quality System.

CC

Inspection certificate

The document entails checking on order compliance, the visual inspection of external conditions and instrumental testing of the electrical characteristics in unloaded conditions. Units inspected are sampled within the shipping batch and marked individually.

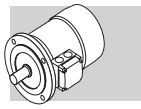

M13 TABLES OF MOTORS CORRELATION

M13.1 50 Hz Motors

(F68)

2 pole								
Efficiency class			IE1	IE2	IE3	IE1	IE2	IE3
	[hp]	[kW]						
Pn	0.08	0.06						
	0.12	0.09						
	0.16	0.12						
	0.25	0.18	BN 63A 2			M 05A 2		
	0.33	0.25	BN 63B 2			M 05B 2		
	0.5	0.37	BN 71A 2			M 05C 2		
	0.75	0.55	BN 71B 2			M 1SD 2		
	1	0.75	BN 71C 2 BN 80A 2	BE 80A 2		M 1LA 2	ME 2SA 2	
	1.5	1.1	BN 80B 2	BE 80B 2		M 2SA 2	ME 2SB 2	
	2	1.5	BN 90SA 2	BE 90SA 2		M 2SB 2		
	2.5	1.85	BN 90SB 2					
	3	2.2	BN 90L 2	BE 90L 2		M 3SA 2		
	4	3	BN 100L 2	BE 100L 2		M 3LA 2	ME 3LB 2	
	5.5	4	BN 112M 2	BE 112M 2		M 3LB 2		
	7.5	5.5	BN 132SA 2	BE 132SA 2		M 4SA 2	ME 4SA 2	
	10	7.5	BN 132SB 2	BE 132SB 2		M 4SB 2	ME 4LA 2	
	12.5	9.2	BN 132M 2	BE 132MB 2		M 4LA 2	ME 4LB 2	
	15	11	BN 160MR 2 BN 160M 2	BE 160MA 2		M 4LC 2	ME 5SA 2	
	20	15	BN 160MB 2	BE 160MB 2		M 5SB 2	ME 5SB 2	
	25	18.5	BN 160L 2	BE 160L 2		M 5SC 2	ME 5LA 2	
	30	22	BN 180M 2			M 5LA 2		
	40	30	BN 200LA 2					

(F69)

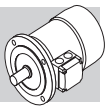

4 pole								
Efficiency class			IE1	IE2	IE3	IE1	IE2	IE3
	[hp]	[kW]						
Pn	**0.08**	**0.06**	BN 56A 4					
	0.12	**0.09**	BN 56B 4			M 0B 4		
	0.16	**0.12**	BN 63A 4			M 05A 4		
	0.25	**0.18**	BN 63B 4			M 05B 4		
	0.33	**0.25**	BN 63C 4			M 05C 4		
			BN 71A 4					
	0.5	**0.37**	BN 71B 4			M 1SD 4		
	0.75	**0.55**	BN 71C 4			M 1LA 4		
			BN 80A 4					
	1	**0.75**	BN 80B 4	BE 80B 4	BX 80B 4	M 2SA 4	ME 2SB 4	MX 2SB 4
	1.5	**1.1**	BN 80C 4	BE 90S 4	BX 90S 4	M 2SB 4	ME 3SA 4	MX 3SA 4
			BN 90S 4					
	2	**1.5**	BN 90LA 4	BE 90LA 4	BX 90LA 4	M 3SA 4	ME 3SB 4	MX 3SB 4
	2.5	**1.85**	BN 90LB 4					
	3	**2.2**	BN 100LA 4	BE 100LA 4	BX 100LA 4	M 3LA 4	ME 3LA 4	MX 3LA 4
	4	**3**	BN 100LB 4	BE 100LB 4	BX 100LB 4	M 3LB 4	ME 3LB 4	MX 3LB 4
	5.5	**4**	BN 112M 4	BE 112M 4	BX 112M 4	M 3LC 4	ME 4SA 4	MX 4SA 4
	7.5	**5.5**	BN 132S 4	BE 132S 4	BX 132SB 4	M 4SA 4	ME 4SB 4	MX 4SB 4
	10	**7.5**	BN 132MA 4	BE 132MA 4	BX 132MA 4	M 4LA 4	ME 4LA 4	MX 4LA 4
	12.5	**9.2**	BN 132MB 4	BE 132MB 4	BX 160MA 4	M 4LB 4	ME 4LB 4	MX 5SA 4
	15	**11**	BN 160MR 4	BE 160M 4	BX 160MB 4	M 4LC 4	ME 5SA 4	MX 5SB 4
			BN 160M 4					
	20	**15**	BN 160L 4	BE 160L 4	BX 160L 4	M 5SB 4	ME 5LA 4	MX 5LA 4
	25	**18.5**	BN 180M 4	BE 180M 4	BX 180M 4	M 5LA 4		
	30	**22**	BN 180L 4	BE 180L 4	BX 180L 4			
	40	**30**	BN 200L 4					

(F70)

6 pole								
Efficiency class			IE1	IE2	IE3	IE1	IE2	IE3
	[hp]	[kW]						
Pn	**0.08**	**0.06**						
	0.12	**0.09**	BN 63A 6			M 05A 6		
	0.16	**0.12**	BN 63B 6			M 05B 6		
	0.25	**0.18**	BN 71A 6			M 1SC 6		
	0.33	**0.25**	BN 71B 6			M 1SD 6		
			BN 71C 6					
	0.5	**0.37**	BN 80A 6			M 1LA 6		
	0.75	**0.55**	BN 80B 6			M 2SA 6		
	1	**0.75**	BN 80C 6	BE 90S 6		M 2SB 6		
			BN 90S 6					
	1.5	**1.1**	BN 90L 6	BE 100M 6		M 3SA 6	ME 3LA 6	
	2	**1.5**	BN 100LA 6	BE 100LA 6		M 3LA 6	ME 3LB 6	
	2.5	**1.85**	BN 100LB 6			M 3LB 6		
	3	**2.2**	BN 112M 6	BE 112M 6		M 3LC 6		
	4	**3**	BN 132S 6	BE 132S 6		M 4SA 6	ME 4SB 6	
	5.5	**4**	BN 132MA 6	BE 132MA 6		M 4LA 6	ME 4LA 6	
	7.5	**5.5**	BN 132MB 6	BE 160MA 6		M 4LB 6	ME 5SA 6	
	10	**7.5**	BN 160M 6	BE 160MB 6		M 5SA 6	ME 5SB 6	
	12.5	**9.2**						
	15	**11**	BN 160L 6			M 5SB 6		
	20	**15**	BN 180L 6					
	25	**18.5**	BN 200LA 6					
	30	**22**						
	40	**30**						

Bonfiglioli Riduttori

M13.2 60 Hz Motors

(F71)

2 pole								
Efficiency class			IE1	IE2	IE3	IE1	IE2	IE3
	[hp]	[kW]						
	0.08	**0.06**						
	0.12	**0.09**						
	0.16	**0.12**						
	0.25	**0.18**	BN 63A 2			M 05A 2		
	0.33	**0.25**	BN 63B 2			M 05B 2		
	0.5	**0.37**	BN 71A 2			M 05C 2		
	0.75	**0.55**	BN 71B 2			M 1SD 2		
	1	**0.75**	BN 71C 2			M 1LA 2		
			BN 80A 2					
	1.5	**1.1**	BN 80B 2			M 2SA 2		
	2	**1.5**	BN 90SA 2			M 2SB 2		
Pn	**2.5**	**1.85**	BN 90SB 2					
	3	**2.2**	BN 90L 2			M 3SA 2		
	4	**3**	BN 100L 2			M 3LA 2		
	5.5	**3.7**	BN 112M 2			M 3LB 2		
	7.5	**5.5**	BN 132SA 2			M 4SA 2		
	10	**7.5**	BN 132SB 2			M 4SB 2		
	12.5	**9.2**	BN 132M 2			M 4LA 2		
	15	**11**	BN 160MR 2			M 4LC 2		
			BN 160M 2					
	20	**15**	BN 160MB 2			M 5SB 2		
	25	**18.5**	BN 160L 2			M 5SC 2		
	30	**22**	BN 180M 2			M 5LA 2		
	40	**30**	BN 200LA 2					

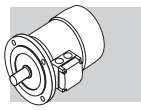

(F72)

4 pole								
Efficiency class			IE1	IE2	IE3	IE1	IE2	IE3
	[hp]	[kW]						
	0.08	**0.06**	BN 56A 4					
	0.12	**0.09**	BN 56B 4			M 0B 4		
	0.16	**0.12**	BN 63A 4			M 05A 4		
	0.25	**0.18**	BN 63B 4			M 05B 4		
	0.33	**0.25**	BN 63C 4			M 05C 4		
			BN 71A 4					
	0.5	**0.37**	BN 71B 4			M 1SD 4		
	0.75	**0.55**	BN 71C 4			M 1LA 4		
			BN 80A 4					
	1	**0.75**	BN 80B 4	BE 80B 4	BX 90SR 4	M 2SA 4	ME 2SB 4	MX 2SB 4
	1.5	**1.1**	BN 80C 4	BE 90S 4	BX 90S 4	M 2SB 4	ME 3SA 4	MX 3SA 4
			BN 90S 4					
Pn	**2**	**1.5**	BN 90LA 4	BE 90LA 4	BX 90LA 4	M 3SA 4	ME 3SB 4	MX 3SB 4
	2.5	**1.85**	BN 90LB 4					
	3	**2.2**	BN 100LA 4	BE 100LA 4	BX 100LA 4	M 3LA 4	ME 3LA 4	MX 3LA 4
	4	**3**	BN 100LB 4	BE 100LB 4	BX 100LB 4	M 3LB 4	ME 3LB 4	MX 3LB 4
	5.5	**3.7**	BN 112M 4	BE 112M 4	BX 112M 4	M 3LC 4	ME 4SA 4	MX 4SA 4
	7.5	**5.5**	BN 132S 4	BE 132S 4	BX 132SB 4	M 4SA 4	ME 4SB 4	MX 4SB 4
	10	**7.5**	BN 132MA 4	BE 132MA 4	BX 132MA 4	M 4LA 4	ME 4LA 4	MX 4LA 4
	12.5	**9.2**	BN 132MB 4	BE 132MB 4	BX 160MA 4	M 4LB 4	ME 4LB 4	MX 5SA 4
	15	**11**	BN 160MR 4	BE 160M 4	BX 160MB 4	M 4LC 4	ME 5SA 4	MX 5SB 4
			BN 160M 4					
	20	**15**	BN 160L 4	BE 160L 4	BX 160L 4	M 5SB 4	ME 5LA 4	MX 5LA 4
	25	**18.5**	BN 180M 4	BE 180M 4	BX 180M 4	M 5LA 4		
	30	**22**	BN 180L 4	BE 180L 4	BX 180L 4			
	40	**30**	BN 200L 4					

(F73)

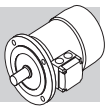

6 pole								
Efficiency class			IE1	IE2	IE3	IE1	IE2	IE3
Pn	[hp]	[kW]						
	0.08	**0.06**						
	0.12	**0.09**	BN 63A 6			M 05A 6		
	0.16	**0.12**	BN 63B 6			M 05B 6		
	0.25	**0.18**	BN 71A 6			M 1SC 6		
	0.33	**0.25**	BN 71B 6			M 1SD 6		
			BN 71C 6					
	0.5	**0.37**	BN 80A 6			M 1LA 6		
	0.75	**0.55**	BN 80B 6			M 2SA 6		
	1	**0.75**	BN 80C 6			M 2SB 6		
			BN 90S 6					
	1.5	**1.1**	BN 90L 6			M 3SA 6		
	2	**1.5**	BN 100LA 6			M 3LA 6		
	2.5	**1.85**	BN 100LB 6			M 3LB 6		
	3	**2.2**	BN 112M 6			M 3LC 6		
	4	**3**	BN 132S 6			M 4SA 6		
	5.5	**3.7**	BN 132MA 6			M 4LA 6		
	7.5	**5.5**	BN 132MB 6			M 4LB 6		
	10	**7.5**	BN 160M 6			M 5SA 6		
	12.5	**9.2**						
	15	**11**	BN 160L 6			M 5SB 6		
	20	**15**	BN 180L 6					
	25	**18.5**	BN 200LA 6					
	30	**22**						
	40	**30**						

4 P	1800 rpm - S1	60 Hz - IE3

P_n hp	P_n kW			n rpm	T_n lb•in	In 400V A	η% 100%	η% 75%	η% 50%	cos φ	I_s/I_n	T_s/T_n	T_a/T_n	KVA code	J_m lb•ft²	IM B5 Kg	IM B5 lbs	d.c. brake FD Mod	d.c. brake FD T_b lb•in	d.c. brake FD J_m lb•ft²	d.c. brake FD IM B5 Kg	d.c. brake FD IM B5 lbs	a.c. brake FA Mod	a.c. brake FA T_b lb•in	a.c. brake FA J_m lb•ft²	a.c. brake FA IM B5 Kg	a.c. brake FA IM B5 lbs
1	0.75	**BX 90SR**	**4**	1755	36.3	1.48	85.5	86.4	83.9	0.73	8	3.7	2.5	L	0.0641	*16*	35	**FD 14**	133	0.0029	*20.2*	45	**FA 14**	133	0.0688	*20.1*	44
1.5	1.1	**BX 90S**	**4**	1740	53	2.15	86.5	85.9	83	0.74	8.2	4.1	2.8	K	0.0641	*16*	35	**FD 14**	133	0.0029	*20.2*	45	**FA 14**	133	0.0688	*20.1*	44
2	1.5	**BX 90LA**	**4**	1735	73	2.91	86.5	86.5	84.4	0.75	7.4	3.6	2.5	K	0.0736	*17*	37	**FD 05**	230	0.0035	*23*	51	**FA 05**	230	0.0831	*23.7*	52
3	2.2	**BX 100LA**	**4**	1760	105	4.4	89.5	88.6	86.2	0.71	9.9	4.8	3.6	N	0.1732	*29*	64	**FD 15**	354	0.0077	*36*	79	**FA 15**	354	0.1827	*36*	79
5	3	**BX 100LB**	**4**	1750	145	5.9	89.5	88.9	86.7	0.71	9.1	4.4	3.3	M	0.1732	*29*	64	**FD 15**	354	0.0077	*36*	79	**FA 15**	354	0.1827	*36*	79
5.5	3.7	**BX 112M**	**4**	1760	177	6.7	89.5	89.5	89.1	0.77	10.4	4.7	3.4	M	0.3085	*38*	84	**FD 06S**	531	0.0139	*48*	106	**FA 06S**	531	0.3298	*50*	110
7.5	5.5	**BX 132SB**	**4**	1770	266	9.9	91.7	92	90.2	0.76	10.7	5.1	4.6	N	0.9729	*77*	170	**FD 56**	664	0.0420	*90*	198	**FA 06**	664	0.9967	*91*	201
10	7.5	**BX 132MA**	**4**	1770	363	13.4	91.7	91.3	89.7	0.76	11	4.9	4.4	N	0.9729	*77*	170	**FD 06**	885	0.0420	*90*	198	**FA 07**	885	0.9967	*95*	209
12.5	9.2	**BX 160MA**	**4**	1770	443	15.6	92.4	92.5	91.6	0.8	9.1	4.1	2.6	L	1.5425	*95*	209	**FD 08**	1505	0.0725	*125*	276	**FA 08**	1505	1.7204	*124*	273
15	11	**BX 160MB**	**4**	1770	522	18.2	92.4	92.9	92	0.82	9.3	4	2.4	L	1.8509	*110*	243	**FD 08**	1505	0.0855	*140*	309	**FA 08**	1505	2.0289	*139*	306
20	15	**BX 160L**	**4**	1770	717	24.5	93	93.5	92.5	0.81	10.9	4.8	2.8	M	2.1120	*121*	267	**FD 08**	1770	0.0965	*151*	333	**FA 08**	1770	2.2899	*150*	331
25	18.5	**BX 180M**	**4**	1780	876	28.6	93.6	94.5	93.2	0.85	13	2.9	2.7	N	3.7019	*155*	342	**FD 09**	2655	0.1760	*195*	430					
30	22	**BX 180L**	**4**	1775	1044	33.1	93.6	94.2	93.1	0.87	11.5	2.8	2.4	M	3.9392	*163*	359	**FD 09**	2655	0.1860	*203*	448					

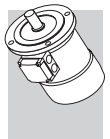

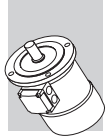

4 P	1800 rpm - S1	60 Hz - IE3

P_n hp	P_n kW		n rpm	T_n lb•in	In 400V A	η% 100%	η% 75%	η% 50%	cos φ	I_s/I_n	M_s/M_n	M_a/M_n	KVA code	J_m lb•ft²	IM B5 Kg	IM B5 lbs	d.c. brake FD Mod	T_b Nm	J_m lb•ft²	IM B5 Kg	IM B5 lbs	a.c. brake FA Mod	T_b Nm	J_m lb•ft²	IM B5 Kg	IM B5 lbs
1	0.75	**MX 2SB 4**	1755	36	1.48	85.5	86.4	83.9	0.73	8.0	3.7	2.5	L	0.0641	*16*	35	**FD 14**	133	0.0688	*20.2*	45	**FA 14**	133	0.0688	*20.1*	44
1.5	1.1	**MX 3SA 4**	1755	53	2.19	86.5	86.0	83.0	0.73	7.9	3.3	2.5	L	0.0831	*17*	37	**FD 15**	133	0.0925	*24*	53	**FA 15**	133	0.0925	*24*	53
2	1.5	**MX 3SB 4**	1755	72	2.96	86.5	87.2	85.0	0.72	8.5	3.7	2.9	L	0.1020	*20*	44	**FD 15**	230	0.1115	*27*	60	**FA 15**	230	0.1115	*27*	60
3	2.2	**MX 3LA 4**	1760	106	4.4	89.5	88.6	86.2	0.71	9.9	4.8	3.6	N	0.1732	*29*	64	**FD 15**	354	0.1827	*36*	79	**FA 15**	354	0.1827	*36*	79
4	3	**MX 3LB 4**	1750	145	5.9	89.5	88.9	86.7	0.71	9.1	4.4	3.3	M	0.1732	*29*	64	**FD 15**	354	0.1827	*36*	79	**FA 15**	354	0.1827	*36*	79
5	3.7	**MX 4SA 4**	1770	177	6.6	89.5	89.8	87.7	0.78	9.9	4.7	3.4	M	0.5339	*45*	99	**FD 56**	664	0.5577	*58*	128	**FA 06**	664	0.5577	*59*	130
7.5	5.5	**MX 4SB 4**	1770	263	9.9	91.7	92.0	90.2	0.76	10.7	5.1	4.6	N	0.9729	*77*	170	**FD 56**	664	0.9967	*90*	198	**FA 06**	664	0.9967	*91*	201
10	7.5	**MX 4LA 4**	1770	358	13.4	91.7	91.3	89.7	0.76	11.0	4.9	4.4	N	0.9729	*77*	170	**FD 06**	885	0.9967	*90*	198	**FA 07**	885	0.9967	*95*	209
12.5	9.2	**MX 5SA 4**	1770	439	15.6	92.4	92.5	91.6	0.8	9.1	4.1	2.6	L	1.5425	*95*	209	**FD 08**	1505	1.7205	*125*	276	**FA 08**	1505	1.7205	*124*	273
15	11	**MX 5SB 4**	1770	525	18.2	92.4	92.9	92.0	0.82	9.3	4.0	2.4	L	1.8509	*110*	243	**FD 08**	1505	2.0289	*140*	309	**FA 08**	1505	2.0289	*139*	306
20	15	**MX 5LA 4**	1770	716	24.5	93.0	93.5	92.5	0.81	10.9	4.8	2.8	M	2.1120	*121*	267	**FD 08**	1770	2.2900	*151*	333	**FA 08**	1770	2.2900	*150*	331

4 P	1500 rpm - S1	50 Hz - IE3

P_n kW	P_n hp		n rpm	T_n lb•in	In 400V A	η% 100%	η% 75%	η% 50%	cos φ	I_s/I_n	T_s/T_n	T_a/T_n	KVA code	J_m lb•ft²	IM B5 Kg	IM B5 lbs	d.c. brake FD Mod	d.c. brake FD T_b lb•in	d.c. brake FD J_m lb•ft²	d.c. brake FD IM B5 Kg	d.c. brake FD IM B5 lbs	a.c. brake FA Mod	a.c. brake FA T_b lb•in	a.c. brake FA J_m lb•ft²	a.c. brake FA IM B5 Kg	a.c. brake FA IM B5 lbs
0.75	1	**BX 80B 4**	1425	44.3	1.61	82.5	83.9	83.2	0.81	6.5	2	1.8	J	0.0831	*16*	35	**FD 04**	133	0.0878	*19.9*	44	**FA 04**	133	0.0878	*19.8*	44
1.1	1.5	**BX 90S 4**	1425	65	2.44	84.1	84.1	82	0.77	6.9	3.4	2.2	J	0.0641	*16*	35	**FD 14**	133	0.0688	*20.2*	45	**FA 14**	133	0.0688	*20.1*	44
1.5	2	**BX 90LA 4**	1420	89	3.3	85.3	86.2	84.9	0.78	6.3	3.1	1.9	J	0.0736	*17*	37	**FD 05**	230	0.0831	*23*	51	**FA 05**	230	0.0831	*23.7*	52
2.2	3	**BX 100LA 4**	1445	128	5.1	86.7	86.2	84	0.72	7.2	3.6	2.4	K	0.1376	*24*	53	**FD 15**	354	0.1471	*31*	68	**FA 15**	354	0.1471	*31*	68
3	5	**BX 100LB 4**	1445	175	6.7	87.7	87.7	86	0.74	7.6	3.9	2.6	K	0.1732	*29*	64	**FD 15**	354	0.1827	*36*	79	**FA 15**	354	0.1827	*36*	79
4	5.5	**BX 112M 4**	1445	230	8.1	88.6	88.9	87.6	0.8	8.1	3.8	2.5	J	0.3085	*38*	84	**FD 06S**	531	0.3298	*48*	106	**FA 06S**	531	0.3298	*50*	110
5.5	7.5	**BX 132SB 4**	1460	319	10.6	89.6	89.2	88.8	0.83	8.2	3.6	2.3	J	0.7356	*57*	126	**FD 56**	664	0.7594	*70*	154	**FA 06**	664	0.7594	*71*	157
7.5	10	**BX 132MA 4**	1460	434	15	90.4	90.9	90.2	0.8	8.4	3.8	2.5	K	0.8543	*67*	148	**FD 06**	885	0.8780	*80*	176	**FA 07**	885	0.8780	*85*	187
9.2	12.5	**BX 160MA 4**	1465	531	17.8	91	92.1	91.7	0.82	7.9	3.6	2.1	J	1.5425	*95*	209	**FD 08**	1505	1.7204	*125*	276	**FA 08**	1505	1.7204	*124*	273
11	15	**BX 160MB 4**	1465	637	20.5	91.4	92.9	92.5	0.84	7.8	3.4	1.9	J	1.8509	*110*	243	**FD 08**	1505	2.0289	*140*	309	**FA 08**	1505	2.0289	*139*	306
15	20	**BX 160L 4**	1465	867	28.1	92.1	93.2	92.6	0.82	9	4.1	2.3	K	2.1120	*121*	267	**FD 08**	1770	2.2899	*151*	333	**FA 08**	1770	2.2899	*150*	331
18.5	25	**BX 180M 4**	1480	1053	32.9	92.6	94.1	93.1	0.85	11.3	2.6	2.3	M	3.7019	*155*	342	**FD 09**	2655	4.1765	*195*	430					
22	30	**BX 180L 4**	1475	1257	38.2	93	93.6	92.8	0.88	10.2	2.5	2	L	3.9392	*163*	359	**FD 09**	2655	4.4138	*203*	448					

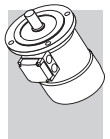

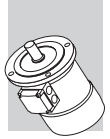

4 P	1500 rpm - S1	50 Hz - IE3

P_n kW	P_n hp		n rpm	T_n lb•in	In 400V A	η% 100%	η% 75%	η% 50%	cos φ	I_s/I_n	M_s/M_n	M_a/M_n	KVA code	J_m lb•ft²	IM B5 Kg	IM B5 lbs	d.c. brake FD Mod	T_b Nm	J_m lb•ft²	IM B5 Kg	IM B5 lbs	a.c. brake FA Mod	T_b Nm	J_m lb•ft²	IM B5 Kg	IM B5 lbs
0.75	1	**MX 2SB 4**	1425	44	1.61	82.5	83.9	83.2	0.81	6.5	2.0	1.8	J	0.0831	*16*	35	**FD 04**	133	0.0878	*19.9*	44	**FA 04**	133	0.0878	*19.8*	44
1.1	1.5	**MX 3SA 4**	1445	64	2.46	84.1	85.5	83.5	0.75	6.7	3.0	2.0	J	0.0831	*17*	37	**FD 15**	133	0.0925	*24*	53	**FA 15**	133	0.0925	*24*	53
1.5	2	**MX 3SB 4**	1445	88	3.3	85.3	86.8	85.4	0.75	6.7	3.1	2.0	J	0.1020	*20*	44	**FD 15**	230	0.1115	*27*	60	**FA 15**	230	0.1115	*27*	60
2.2	3	**MX 3LA 4**	1445	129	5.1	86.7	86.2	84.0	0.72	7.2	3.6	2.4	K	0.1376	*24*	53	**FD 15**	354	0.1471	*31*	68	**FA 15**	354	0.1471	*31*	68
3	4	**MX 3LB 4**	1445	175	6.7	87.7	87.7	86.0	0.74	7.6	3.9	2.6	K	0.1732	*29*	64	**FD 15**	354	0.1827	*36*	79	**FA 15**	354	0.1827	*36*	79
3.7	5.4	**MX 4SA 4**	1460	232	7.8	88.6	89.9	88.7	0.82	8.1	3.7	2.5	J	0.5339	*45*	99	**FD 56**	664	0.5577	*58*	128	**FA 06**	664	0.5577	*59*	130
5.5	7.5	**MX 4SB 4**	1460	318	10.6	89.6	89.9	88.8	0.83	8.2	3.6	2.3	J	0.7356	*57*	126	**FD 56**	664	0.7594	*70*	154	**FA 06**	664	0.7594	*71*	157
7.5	10	**MX 4LA 4**	1460	434	15.0	90.4	90.9	90.2	0.80	8.4	3.8	2.5	K	0.8543	*67*	148	**FD 06**	885	0.8780	*80*	176	**FA 07**	885	0.8780	*85*	187
9.2	12.5	**MX 5SA 4**	1465	531	17.8	91.0	92.1	91.7	0.82	7.9	3.6	2.1	J	1.5425	*95*	209	**FD 08**	1505	1.7205	*125*	276	**FA 08**	1505	1.7205	*124*	273
11	15	**MX 5SB 4**	1465	635	20.5	91.4	92.9	92.5	0.84	7.8	3.4	1.9	J	1.8509	*110*	243	**FD 08**	1505	2.0289	*140*	309	**FA 08**	1505	2.0289	*139*	306
15	20	**MX 5LA 4**	1465	865	28.1	92.1	93.2	92.6	0.82	9.0	4.1	2.3	K	2.1120	*121*	267	**FD 08**	1770	2.2900	*151*	333	**FA 08**	1770	2.2900	*150*	331

BX - IM B5 - CE/CCC

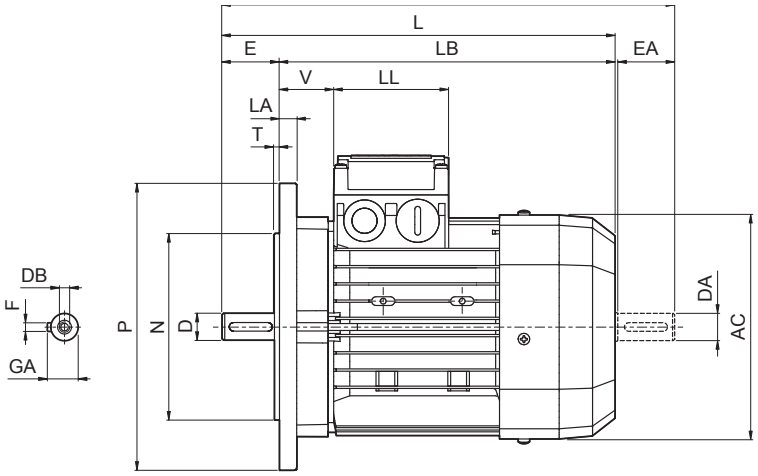

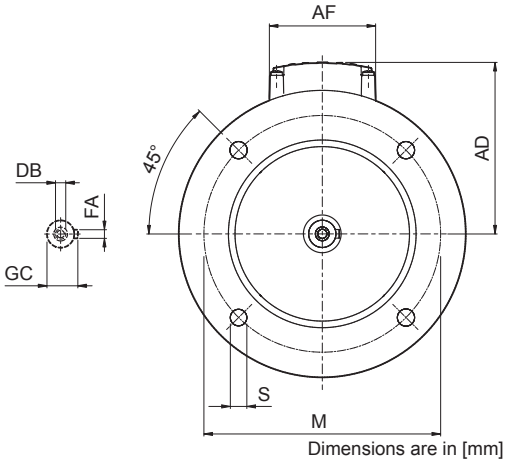

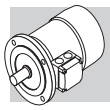

Dimensions are in [mm]

	Shaft					Flange						Motor							
	D DA	E EA	DB	GA GC	F FA	M	N	P	S	T	LA	AC	L	LB	LC	AD	AF	LL	V
BX 80 B	19 14(1)	40 30(1)	M6 M5(1)	21.5 16(1)	6 5(1)	165	130	200	11.5	3.5	11.5	156	320	280	351	119	74	80	38
BX 90 S	24 19(1)	50 40(1)	M8 M6(1)	27 21.5 (1)	8 6(1)							176	326	276	368	133	98	98	44
BX 90 LA																			
BX 100 LA	28 24(1)	60 50(1)	M10 M8(1)	31 27(1)	8 8(1)	215	180	250	14	4	14	195	410	350	462	142			50
BX 100 LB																			
BX 112 M											15	219	430	370	482	157			52
BX 132 SB	38 28(1)	80 60(1)	M12 M10(1)	41 31(1)	10 8(1)	265	230	300			20	258	493	413	556	193	118	118	58
BX 132 MA													528	448	591				
BX 160 MA	42 38(1)	110 80(1)	M16 M12(1)	45 41(1)	12 10(1)	300	250	350	18.5	5	15	310	596	486	680	245	187	187	51
BX 160 MB													640	530	724				
BX 160 L																			
BX 180 M	48 42(1)	110 110(1)	M16 M16(1)	51.5 45(1)	14 12(1)						18	348	708	598	823	261			52
BX 180 L																			
BX 200LA	55 45(1)		M20 M20(1)	59 48.5(1)	16 14(1)	350	300	400	19		20	423	821	711	934	328	300	311	55
BX 225SA	60 55(1)	140 110(1)		64 59(1)	18 16(1)	400	350	450				465	879	739	1001	348			48
BX 225SB																			
BX 250MA	65 55(1)			69 59(1)		500	450	550			24	514	884	744	1010	376			
BX 280SA	75 65(1)	140 140(1)		79.5 69(1)	20 18(1)				18		23	567	1088	948	1238	482	434	306	43
BX 280SB																			
BX 315SA	80 75(1)	170 140(1)		85 79.5(1)	22 20(1)	600	550	660	23	6	25	645	1204	1034	1352	537	473	347	42
BX 315SB																			
BX 315SC																			
BX 315MA	90 75(1)		M24 M20(1)	95 79.5(1)	25 20(1)								1315	1145	1463				
BX 355MA	100 75(1)	210 170(1)		106 79.5(1)	28 20(1)	740	680	800				740	1479	1269	1659	603	694	413	50
BX 355MB																			
BX 355MC																			

N.B.: 1) These values refer to the rear shaft end (PS).

BX - IM B5

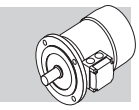

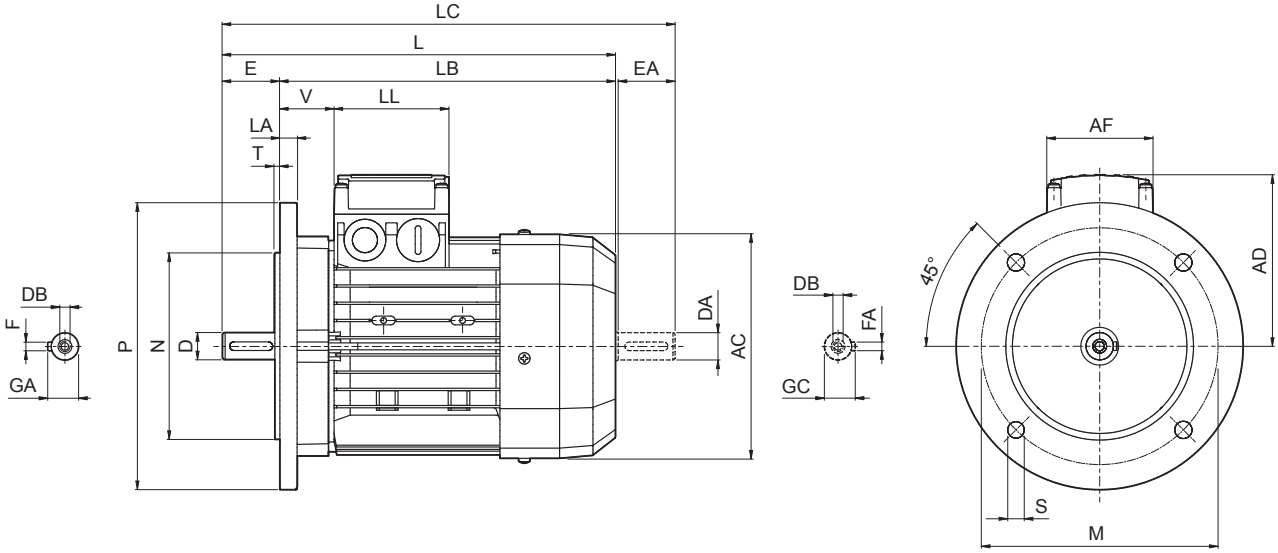

BX-MX

Dimensions are in Inch except when shown in *italic [mm]*

	Shaft					Flange						Motor							
	D DA	**E EA**	**DB**	**GA GC**	**F FA**	**M**	**N**	**P**	**S**	**T**	**LA**	**AC**	**L**	**LB**	**LC**	**AD**	**AF**	**LL**	**V**
BX 80 B	0.748 0.551(1)	1.575 1.181(1)	*M6* *M5(1)*	0.846 0.630(1)	0.236 0.197(1)							6.142	12.598	11.024	13.819	4.685	2.913	3.150	1.496
BX 90 S	0.945 0.748(1)	1.969 1.575(1)	*M8* *M6(1)*	1.063 0.846(1)	0.315 0.236(1)	6.496	5.118	7.874	0.453	0.138	0.453	6.929	12.835	10.866	14.488	5.236			1.732
BX 90 LA																			
BX 100 LA																	3.858	3.858	
BX 100 LB	1.102 0.945(1)	2.362 1.969(1)	*M10* *M8(1)*	1.220 1.063(1)	0.315 0.315(1)	8.465	7.087	9.843			0.551	7.677	16.142	13.780	18.189	5.591			1.969
BX 112 M									0.551	0.157	0.591	8.622	16.929	14.567	18.976	6.181			2.047
BX 132 SB	1.496 1.102(1)	3.150 2.362(1)	*M12* *M10(1)*	1.614 1.220(1)	0.394 0.315(1)	10.433	9.055	11.811			0.787	10.157	19.409	16.260	21.890	7.598	4.646	4.646	2.283
BX 132 MA													20.787	17.638	23.268				
BX 160 MA													23.465	19.134	26.772				
BX 160 MB	1.654 1.496(1)	4.331 3.150(1)	*M16* *M12(1)*	1.772 1.614(1)	0.472 0.394(1)						0.591	12.205				9.646			2.008
BX 160 L						11.811	9.843	13.780	0.728	0.197			25.197	20.866	28.504		7.362	7.362	
BX 180 M	1.890 1.654(1)	4.331 4.331(1)	*M16* *M16(1)*	2.028 1.772(1)	0.551 0.472(1)						0.709	13.701	27.874	23.543	32.402	10.276			2.047
BX 180 L																			

N.B.:
1) These values refer to the rear shaft end (PS).

Bonfiglioli Riduttori

BX - IM B5 - FD/FA - CE/CCC

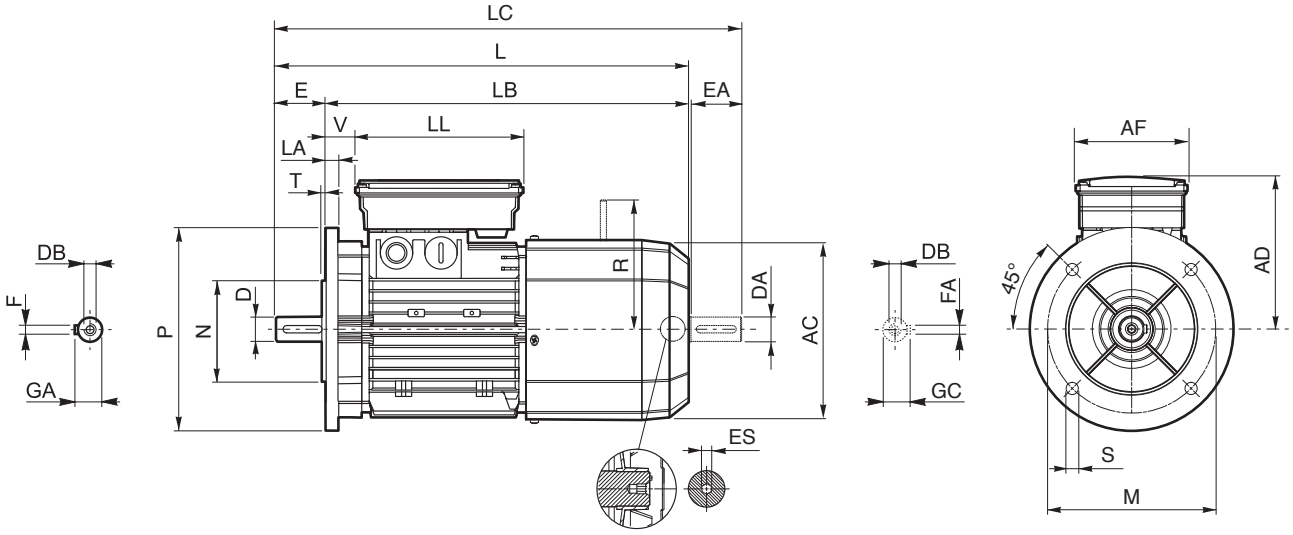

Dimensions are in [mm]

	Shaft					Flange						Motor										
	D DA	E EA	DB	GA GC	F FA	M	N	P	S	T	LA	AC	L	LB	LC	AD	AF	LL	V	R FD	R FA	ES (2)
BX 80 B	19 14(1)	40 30(1)	M6 M5(1)	21.5 16(1)	6 5(1)	165	130	200	11.5	3.5	11.5	156	392	352	423	143	98	133	25	129	134	5
BX 90 S	24 19(1)	50 40(1)	M8 M6(1)	27 21.5 (1)	8 6(1)							176	410	360	452	146	110	165	32			6
BX 90 LA																				160	160	
BX 100 LA	28 24(1)	60 50(1)	M10 M8(1)	31 27(1)	8 8(1)	215	180	250	14	4	14	195	502	442	554	155			37			
BX 100 LB																						
BX 112 M											15	219	527	467	579	170			39	199	198	
BX 132 SB	38 28(1)	80 60(1)	M12 M10(1)	41 31(1)	10 8(1)	265	230	300			16	258	603	523	667	210	140	188	46	204	200	
BX 132 MA													627	547	690						226	
BX 160 MA	42 38(1)	110 80(1)	M16 M12(1)	45 41(1)	12 10(1)	300	250	350	18.5	5	15	310	736	626	820	245	187	187	51	266	247	—
BX 160 MB													780	670	864							
BX 160 L																						
BX 180 M	48 42(1)	110 110(1)	M16 M16(1)	51.5 45(1)	14 12(1)						18	348	866	756	981	261			52	305	—	
BX 180 L																						
BX 200LA	55 45(1)		M20 M20(1)	59 48.5(1)	16 14(1)	350	300	400	19	5	20	423	982	872	1095	328	300	311	55	275		
BX 225SA	60 55(1)	140 110(1)		64 59(1)	18 16(1)	400	350	450				465	1058	918	1180	348			48	308		
BX 225SB																						
BX 250MA	65 55(1)			69 59(1)		500	450	550			24	514	1099	959	1225	376				313		
BX 280SA	75 65(1)	140 140(1)		79.5 69(1)	20 18(1)				18		23	567	1340	1200	1490	482	434	306	43	500		
BX 280SB																						
BX 315SA	80 75(1)	170 140(1)		85 79.5(1)	22 20(1)	600	550	660	23	6	25	645	1452	1282	1600	537	473	347	42			
BX 315SB													1497	1327	1645							
BX 315SC																						
BX 315MA	90 75(1)		M24 M20(1)	95 79.5(1)	25 20(1)								1607	1437	1755							
BX 355MA	100 75(1)	210 170(1)		106 79.5(1)	28 20(1)	740	680	800				740	1790	1580	1970	603	694	413	50	—		
BX 355MB													1825	1615	2005							
BX 355MC																						

N.B.: 1) These values refer to the rear shaft end (PS). 2) “ES” hexagon is not present with PS option

BX_FA/FD ; IM B5

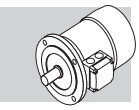

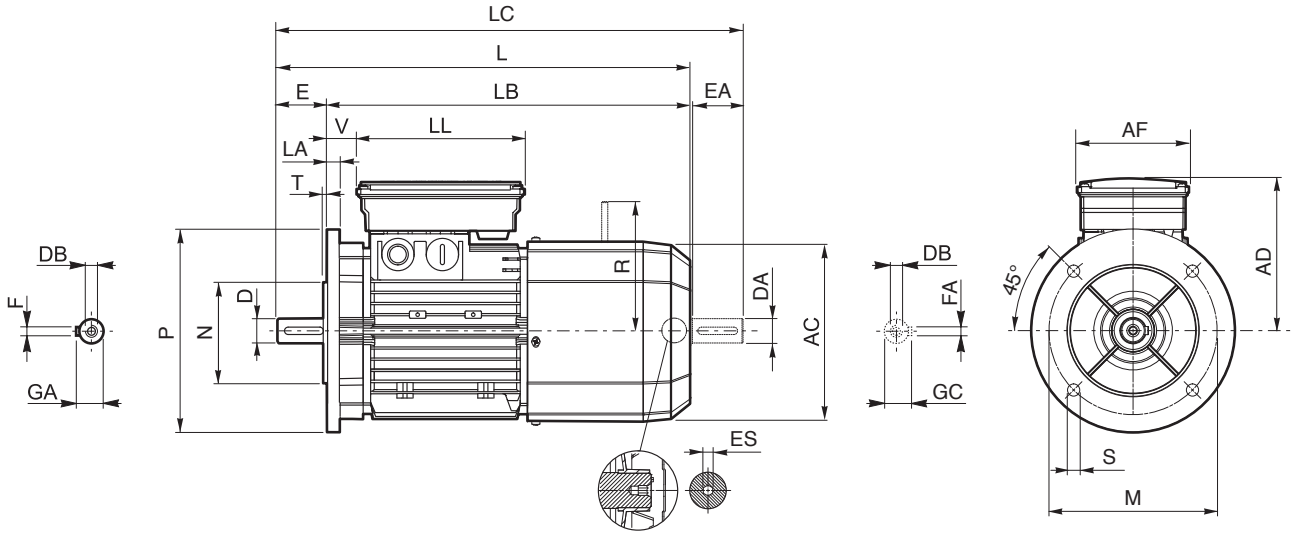

Dimensions are in Inch except when shown in *italic [mm]*

	Shaft					Housing						Motor										
	D DA	E EA	DB	GA GC	F FA	M	N	P	S	T	LA	AC	L	LB	LC	AD	AF	LL	V	R FD	R FA	ES (2)
BX 80 B	0.748 0.551(1)	1.575 1.181(1)	*M6* *M5(1)*	0.846 0.630(1)	0.236 0.197(1)	6.496	5.118	7.874	0.453	0.138	0.453	6.142	15.433	13.858	16.654	5.630	3.858	5.236	0.984	5.079	5.276	0.197
BX 90 S	0.945 0.748(1)	1.969 1.575(1)	*M8* *M6(1)*	1.063 0.846(1)	0.315 0.236(1)							6.929	16.142	14.173	17.795	5.748	4.331	6.496	1.260			0.236
BX 90 LA																				6.299	6.299	
BX 100 LA	1.102 0.945(1)	2.362 1.969(1)	*M10* *M8(1)*	1.220 1.063(1)	0.315 0.315(1)	8.465	7.087	9.843	0.551	0.157	0.551	7.677	19.764	17.402	21.811	6.102			1.457			
BX 100 LB																						
BX 112 M											0.591	8.622	20.748	18.386	22.795	6.693			1.535	7.835	7.795	
BX 132 SB	1.496 1.102(1)	3.150 2.362(1)	*M12* *M10(1)*	1.614 1.220(1)	0.394 0.315(1)	10.433	9.055	11.811			0.630	10.157	23.740	20.591	26.260	8.268	5.512	7.402	1.811	8.031	7.874	
BX 132 MA													24.685	21.535	27.165						8.898	
BX 160 MA	1.654 1.496(1)	4.331 3.150(1)	*M16* *M12(1)*	1.772 1.614(1)	0.472 0.394(1)	11.811	9.843	13.780	0.728	0.197	0.591	12.205	28.976	24.646	32.283	9.646	7.362	7.362	2.008	10.472	9.724	—
BX 160 MB													30.709	26.378	34.016							
BX 160 L																						
BX 180 M	1.890 1.654(1)	4.331 4.331(1)	*M16* *M16(1)*	2.028 1.772(1)	0.551 0.472(1)						0.709	13.701	34.094	29.764	38.622	10.276			2.047	12.008	—	
BX 180 L																						

N.B.:
1) These values refer to the rear shaft end (PS).
2) “ES” hexagon is not present with PS option

Bonfiglioli Riduttori

BX - IM B5 - CUS/NBR/EECA

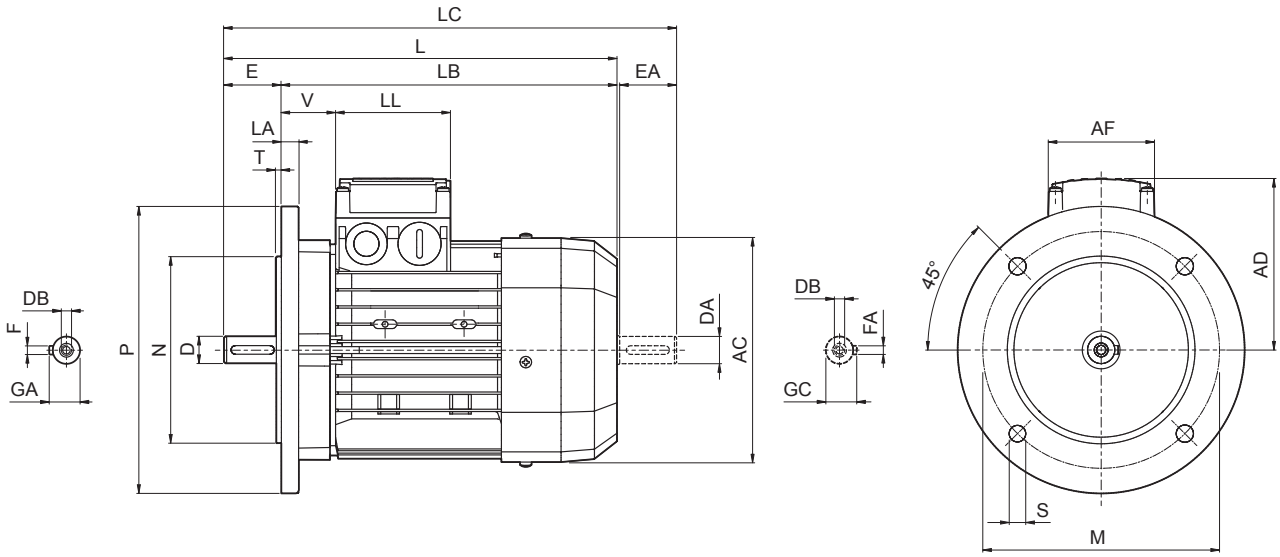

Dimensions are in [mm]

	Shaft					Flange						Motor							
	D DA	E EA	DB	GA GC	F FA	M	N	P	S	T	LA	AC	L	LB	LC	AD	AF	LL	V
BX 90 SR	19 19(1)	40 40(1)	M6 M6(1)	21.5 21.5(1)	6 6(1)	165	130	200	11.5	3.5	11.5	176	316	276	358	133	98	98	44
BX 90 S	24 19(1)	50 40(1)	M8 M6(1)	27 21.5(1)	8 6(1)								326		368				
BX 90 LA																			
BX 100 LA	28 24(1)	60 50(1)	M10 M8(1)	31 27(1)	8 8(1)	215	180	250	14	4	14	195	410	350	462	142			50
BX 100 LB																			
BX 112 M											15	219	430	370	482	157			52
BX 132 SB	38 28(1)	80 60(1)	M12 M10(1)	41 31(1)	10 8(1)	265	230	300			20	258	552	472	615	193	118	118	58
BX 132 MA																			
BX 160 MA	42 38(1)	110 80(1)	M16 M12(1)	45 41(1)	12 10(1)	300	250	350	18.5	5	15	310	596	486	680	245	187	187	51
BX 160 MB													640	530	724				
BX 160 L																			
BX 180 M	48 42(1)	110 110(1)	M16 M16(1)	51.5 45(1)	14 12(1)						18	348	708	598	823	261			52
BX 180 L																			
BX 200LAK	55 45(1)	110 110(1)	M20 M20(1)	59 48.5(1)	16 14(1)	350	300	400	19	5	20	423	821	711	934	328	300	311	55
BX 225SAK	60 55(1)	140 110(1)	M20 M20(1)	64 59(1)	18 16(1)	400	350	450	19	5	20	465	879	739	1001	348	300	311	48
BX 225SBK																			
BX 250MAK	65 55(1)	140 110(1)	M20 M20(1)	69 59(1)	18 16(1)	500	450	550	19	5	24	514	884	744	1010	376	300	311	
BX 280SAK	75 65(1)	140 140(1)	M20 M20(1)	79.5 69(1)	20 18(1)	500	450	550	18	5	23	567	1088	948	1238	482	434	306	43
BX 280SBK																			
BX 315SAK	80 75(1)	170 140(1)	M20 M20(1)	85 79.5(1)	22 20(1)	600	550	660	23	6	25	645	1204	1034	1352	537	473	347	42
BX 315SBK																			
BX 315SCK													1315	1145	1453				
BX 355SAK	100 75(1)	210 170(1)	M24 M20(1)	106 79.5(1)	28 20(1)	740	680	800	23	6	25	740	1479	1269	1659	603	694	413	50
BX 355MAK																			
BX 355MBK																			
BX 355MCK													1584	1374	1764				

N.B.: 1) These values refer to the rear shaft end (PS).

BX - CUS - IM B5

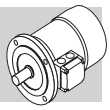

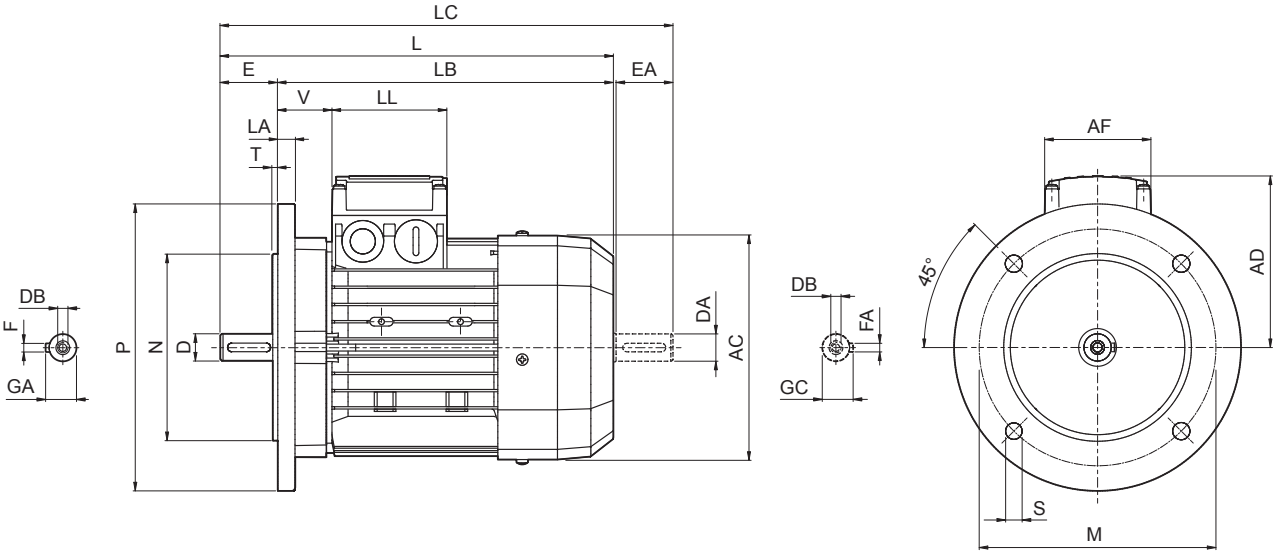

BX-MX

Dimensions are in Inch except when shown in *italic [mm]*

	Shaft					Housing						Motor							
	D DA	**E EA**	**DB**	**GA GC**	**F FA**	**M**	**N**	**P**	**S**	**T**	**LA**	**AC**	**L**	**LB**	**LC**	**AD**	**AF**	**LL**	**V**
BX 90 SR	0.748 0.748(1)	1.575 1.575(1)	*M6* *M6(1)*	0.846 0.846(1)	0.236 0.236(1)	6.496	5.118	7.874	0.453	0.138	0.453	6.929	12.441	10.866	14.094	5.236	3.858	3.858	1.732
BX 90 S	0.945 0.748(1)	1.969 1.575(1)	*M8* *M6(1)*	1.063 0.846(1)	0.315 0.236(1)								12.835		14.488				
BX 90 LA																			
BX 100 LA	1.102 0.945(1)	2.362 1.969(1)	*M10* *M8(1)*	1.220 1.063(1)	0.315 0.315(1)	8.465	7.087	9.843	0.551	0.157	0.551	7.677	16.142	13.780	18.189	5.591			1.969
BX 100 LB																			
BX 112 M											0.591	8.622	16.929	14.567	18.976	6.181			2.047
BX 132 SB	1.496 1.102(1)	3.150 2.362(1)	*M12* *M10(1)*	1.614 1.220(1)	0.394 0.315(1)	10.433	9.055	11.811			0.787	10.157	21.732	18.583	24.213	7.598	4.646	4.646	2.283
BX 132 MA																			
BX 160 MA	1.654 1.496(1)	4.331 3.150(1)	*M16* *M12(1)*	1.772 1.614(1)	0.472 0.394(1)	11.811	9.843	13.780	0.728	0.197	0.591	12.205	23.465	19.134	26.772	9.646	7.362	7.362	2.008
BX 160 MB													25.197	20.866	28.504				
BX 160 L																			
BX 180 M	1.890 1.654(1)	4.331 4.331(1)	*M16* *M16(1)*	2.028 1.772(1)	0.551 0.472(1)						0.709	13.701	27.874	23.543	32.402	10.276			2.047
BX 180 L																			

N.B.:
1) These values refer to the rear shaft end (PS).

Bonfiglioli Riduttori

BX - IM B5 - FD/FA - CUS/NBR/EECA

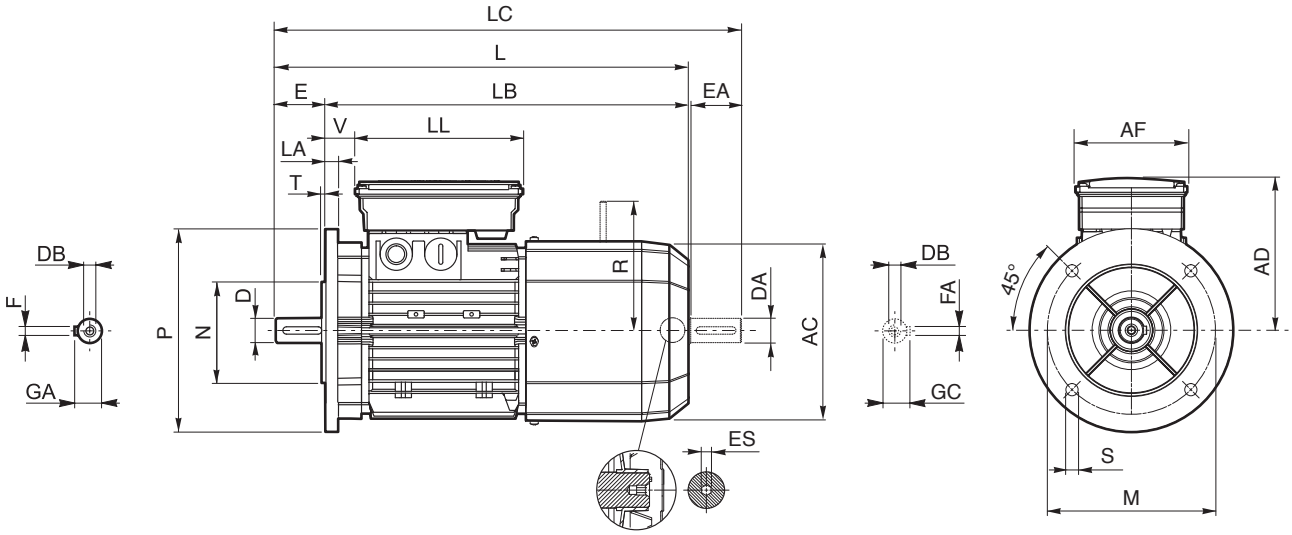

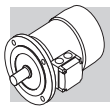

Dimensions are in [mm]

	Shaft					Flange						Motor										
	D DA	E EA	DB	GA GC	F FA	M	N	P	S	T	LA	AC	L	LB	LC	AD	AF	LL	V	R FD	R FA	ES (2)
BX 90 SR	19 19(1)	40 40(1)	M6 M6(1)	21.5 21.5(1)	6 6(1)	165	130	200	11.5	3.5	11.5	176	400	360	442	146	110	165	32	129	134	6
BX 90 S	24 19(1)	50 40(1)	M8 M6(1)	27 21.5(1)	8 6(1)								410		452							
BX 90 LA																				160	160	
BX 100 LA	28 24(1)	60 50(1)	M10 M8(1)	31 27(1)	8 8(1)	215	180	250	14	4	14	195	502	442	554	155			37			
BX 100 LB																						
BX 112 M											15	219	527	467	579	170			39	199	198	
BX 132 SB	38 28(1)	80 60(1)	M12 M10(1)	41 31(1)	10 8(1)	265	230	300			16	258	661	581	724	210	140	188	46	204	200	
BX 132 MA																					226	
BX 160 MA	42 38(1)	110 80(1)	M16 M12(1)	45 41(1)	12 10(1)	300	250	350	18.5	5	15	310	736	626	820	245	187	187	51	266	247	—
BX 160 MB													780	670	864							
BX 160 L																						
BX 180 M	48 42(1)	110 110(1)	M16 M16(1)	51.5 45(1)	14 12(1)						18	348	866	756	981	261			52	305	—	
BX 180 L																						
BX 200LAK	55 45(1)		M20 M16(1)	59 48.5(1)	16 14(1)	350	300	400	19	5	20	417	967	857	1082	328	300	311	55	275		
BX 225SAK	60 55(1)	140 110(1)	M20 M20(1)	64 59(1)	18 16(1)	400	350	450				460	1065	925	1180	348			48	308		
BX 225SBK																						
BX 250MAK	65 55(1)			69 59(1)		500	450	550			24	510	1070	930	1240	376				313		
BX 280SAK	75 65(1)	140 140(1)		79.5 69(1)	20 18(1)				18		23	564	1284	1144	1379	482	434	306	43	500		
BX 280SBK																						
BX 315SAK	80 75(1)	170 140(1)		85 79.5(1)	22 20(1)	600	550	660	23	6	25	639	1493	1323	1643	537	473	347	42			
BX 315SBK													1530	1360	1680							
BX 315SCK													1604	1434	1791							
BX 355SAK	100 90(1)	210 170(1)	M24 M24(1)	106 95(1)	28 25(1)	740	680	800				725	1722	1512	1902	603	694	413	50	—		
BX 355MAK																						
BX 355MBK																						
BX 355MCK													1827	1617	2082							

N.B.: 1) These values refer to the rear shaft end (PS). 2) “ES” hexagon is not present with PS option

BX_FA/FD CUS ; IM B5

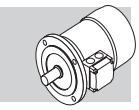

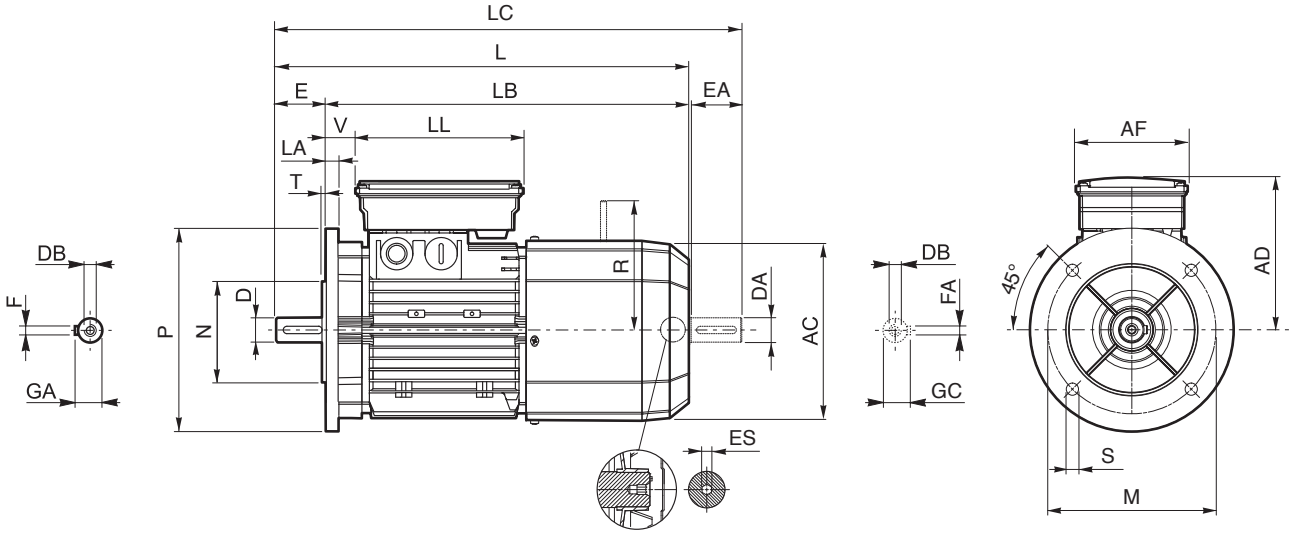

BX-MX

Dimensions are in Inch except when shown in *italic [mm]*

	Shaft					Housing						Motor										
	D DA	E EA	DB	GA GC	F FA	M	N	P	S	T	LA	AC	L	LB	LC	AD	AF	LL	V	R FD	R FA	ES (2)
BX 90 SR	0.748 0.748(1)	1.575 1.575(1)	M6 M6(1)	0.846 0.846(1)	0.236 0.236(1)								15.748		17.402					5.079	5.276	
BX 90 S	0.945 0.748(1)	1.969 1.575(1)	M8 M6(1)	1.063 0.846(1)	0.315 0.236(1)	6.496	5.118	7.874	0.453	0.138	0.453	6.929	16.142	14.173	17.795	5.748			1.260			
BX 90 LA																	4.331	6.496		6.299	6.299	
BX 100 LA																						
BX 100 LB	1.102 0.945(1)	2.362 1.969(1)	M10 M8(1)	1.220 1.063(1)	0.315 0.315(1)	8.465	7.087	9.843			0.551	7.677	19.764	17.402	21.811	6.102			1.457			0.236
BX 112 M									0.551	0.157	0.591	8.622	20.748	18.386	22.795	6.693			1.535	7.835	7.795	
BX 132 SB	1.496 1.102(1)	3.150 2.362(1)	M12 M10(1)	1.614 1.220(1)	0.394 0.315(1)	10.433	9.055	11.811			0.630	10.157	26.024	22.874	28.504	8.268	5.512	7.402	1.811	8.031	7.874	
BX 132 MA																					8.898	
BX 160 MA													28.976	24.646	32.283							
BX 160 MB	1.654 1.496(1)	4.331 3.150(1)	M16 M12(1)	1.772 1.614(1)	0.472 0.394(1)						0.591	12.205				9.646			2.008	10.472	9.724	
BX 160 L						11.811	9.843	13.780	0.728	0.197			30.709	26.378	34.016		7.362	7.362				—
BX 180 M	1.890 1.654(1)	4.331 4.331(1)	M16 M16(1)	2.028 1.772(1)	0.551 0.472(1)						0.709	13.701	34.094	29.764	38.622	10.276			2.047	12.008	—	
BX 180 L																						

N.B.:
1) These values refer to the rear shaft end (PS).
2) “ES” hexagon is not present with PS option

Bonfiglioli Riduttori

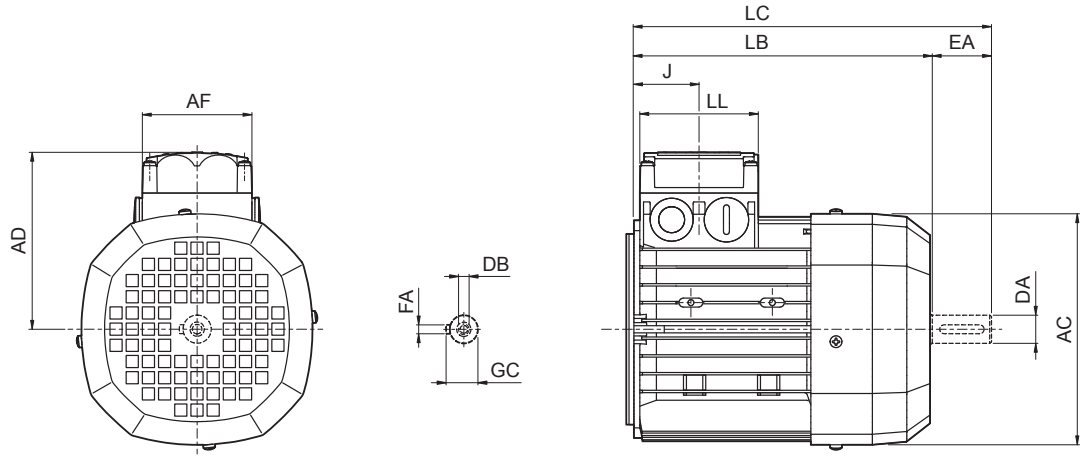

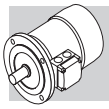

Dimensions are in [mm]

	Rear shaft end					Motor						
	DA	**EA**	**DB**	**GC**	**FA**	**AC**	**LB**	**LC**	**AF**	**LL**	**J**	**AD**
MX 2SB	14	30	M5	16	5	156	246	278	74	80	44	119
MX 3SA	24	50	M8	27	8	195	265	317	98	98	53.5	142
MX 3SB												
MX 3LA							305	357				
MX 3LB												
MX 4SA	28	60	M10	31		258	361	424	118	118	64.5	193
MX 4SB												
MX 4LA							396	459				
MX 5SA	38	80	M12	41	10	310	418	502	187	187	77	245
MX 5SB							462	546				
MX 5LA												

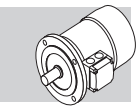

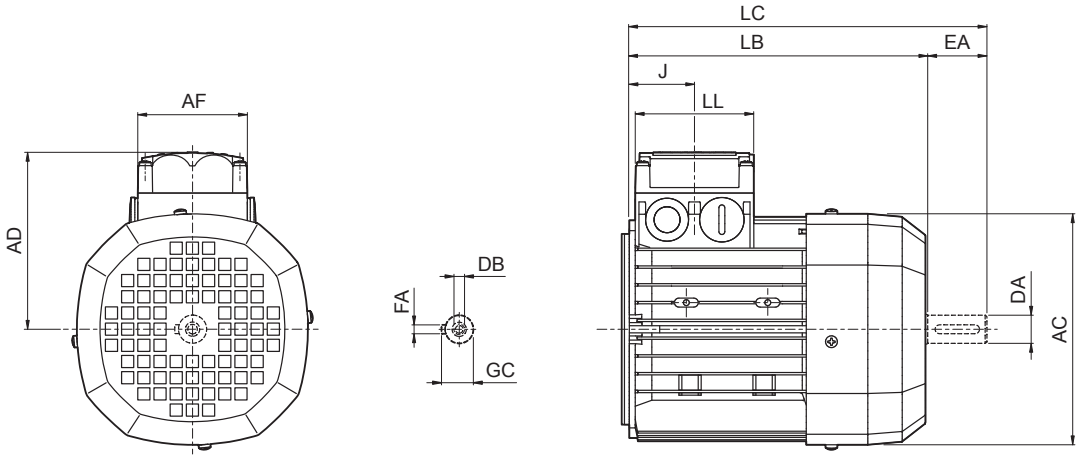

Dimensions are in Inch except when shown in *italic [mm]*

	Read shaft end					Motor						
	DA	**EA**	**DB**	**GC**	**FA**	**AC**	**LB**	**LC**	**AF**	**LL**	**J**	**AD**
MX 2SB	0.551	1.181	*M5*	0.630	0.197	6.142	9.685	10.945	2.913	3.150	1.732	4.685
MX 3SA	0.945	1.969	*M8*	1.063	0.315	7.677	10.433	12.480	3.858	3.858	2.106	5.591
MX 3SB												
MX 3LA							12.008	14.055				
MX 3LB												
MX 4SA	1.102	2.362	*M10*	1.220		10.157	14.213	16.693	4.646	4.646	2.539	7.598
MX 4SB												
MX 4LA							15.591	18.071				
MX 5SA	1.496	3.150	*M12*	1.614	0.394	12.205	16.457	19.764	7.362	7.362	3.031	9.646
MX 5SB							18.189	21.496				
MX 5LA												

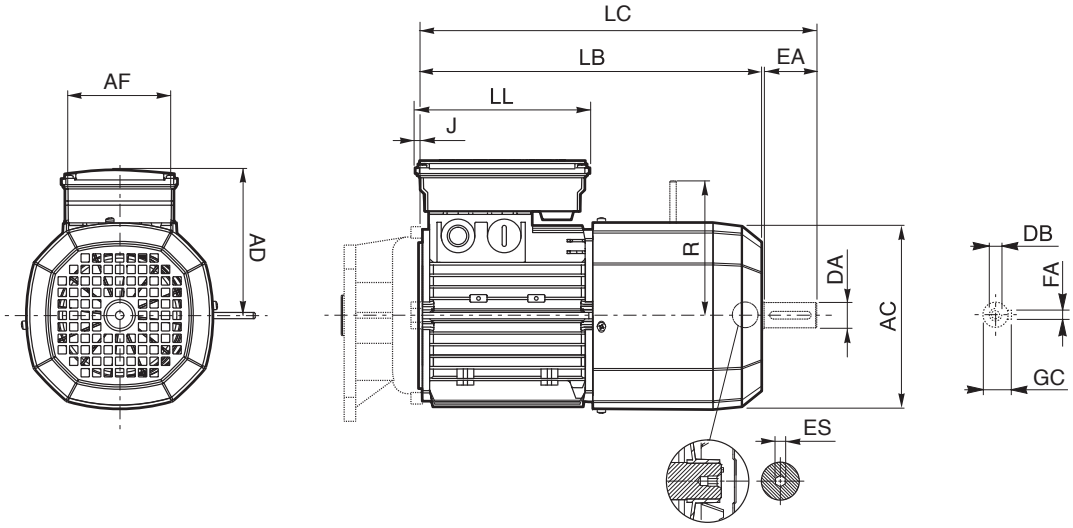

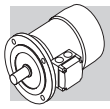

Dimensions are in [mm]

	Rear shaft end					Motor									
	DA	**EA**	**DB**	**GC**	**FA**	**AC**	**LB**	**LC**	**AF**	**LL**	**J**	**AD**	**R FD**	**R FA**	**ES (1)**
MX 2SB	14	30	M5	16	5	156	318	349	98	133	9	143	129	134	5
MX 3SA	24	50	M8	27	8	195	355	407	110	165	7	155	160	160	6
MX 3SB															
MX 3LA							397	450							
MX 3LB															
MX 4SA	28	60	M10	31		258	470	534	140	188		210	204	200	
MX 4SB															
MX 4LA							494	558						226	
MX 5SA	38	80	M12	41	10	310	558	644	187	187	17	245	266	247	—
MX 5SB							602	686							
MX 5LA															

N.B.:
1) “ES” hexagon is not present with PS option

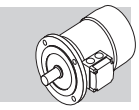

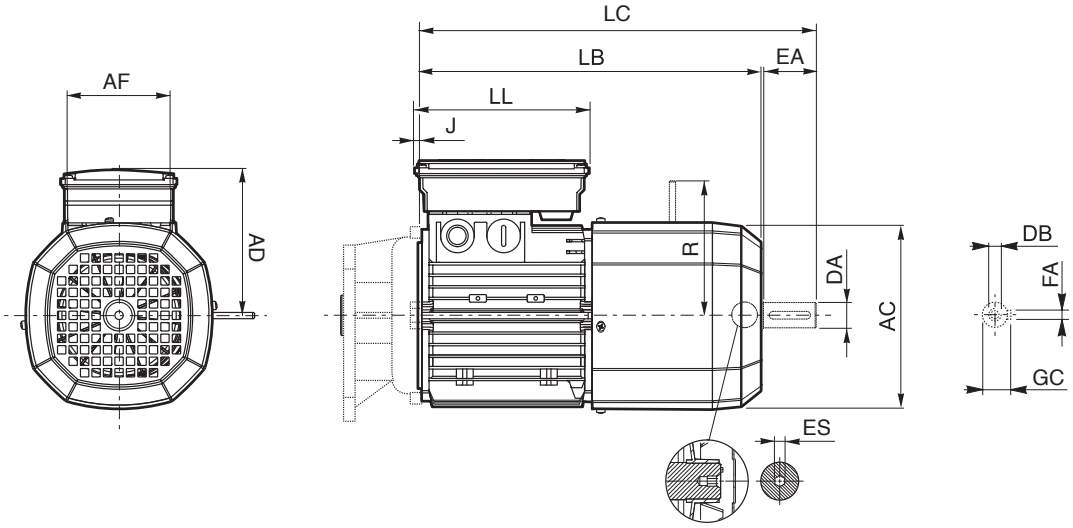

Dimensions are in Inch except when shown in *italic [mm]*

	Read shaft end					Motor									
	DA	**EA**	**DB**	**GC**	**FA**	**AC**	**LB**	**LC**	**AF**	**LL**	**J**	**AD**	**R FD**	**R FA**	**ES** (1)
MX 2SB	0.551	1.181	M5	0.630	0.197	6.142	12.520	13.740	3.858	5.236	0.354	5.630	5.079	5.276	0.197
MX 3SA	0.945	1.969	M8	1.063	0.315	7.677	13.976	16.024	4.331	6.496	0.276	6.102	6.299	6.299	0.236
MX 3SB															
MX 3LA							15.630	17.717							
MX 3LB															
MX 4SA	1.102	2.362	M10	1.220		10.157	18.504	21.024	5.512	7.402		8.268	8.031	7.874	
MX 4SB															
MX 4LA							19.449	21.969						8.898	
MX 5SA	1.496	3.150	M12	1.614	0.394	12.205	21.969	25.354	7.362	7.362	0.669	9.646	10.472	9.724	—
MX 5SB							23.701	27.008							
MX 5LA															

N.B.:
1) “ES” hexagon is not present with PS option

MX_FD/FA CUS

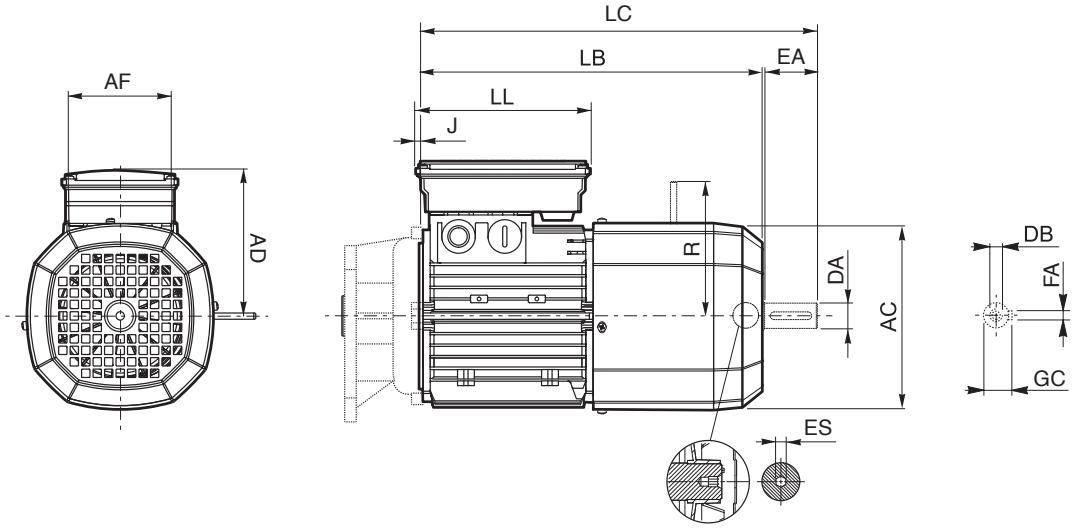

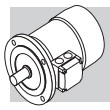

BX-MX

Dimensions are in [mm]

	Rear shaft end					Motor									
	DA	**EA**	**DB**	**GC**	**FA**	**AC**	**LB**	**LC**	**AF**	**LL**	**J**	**AD**	**R FD FA**		**ES (1)**
MX 2SB	14	30	M5	16	5	176	347	379	110	165	-17	146	129	134	6
MX 3SA	24	50	M8	27	8	195	355	407			7	155	160	160	
MX 3SB															
MX 3LA							397	450							
MX 3LB															
MX 4SA	28	60	M10	31		258	470	534	140	188		210	204	200	
MX 4SB							528	592							
MX 4LA														226	
MX 5SA	38	80	M12	41	10	310	558	644	187	187	17	245	266	247	—
MX 5SB							602	686							
MX 5LA															

N.B.:
1) “ES” hexagon is not present with PS option

MX_FD/FA CUS

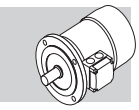

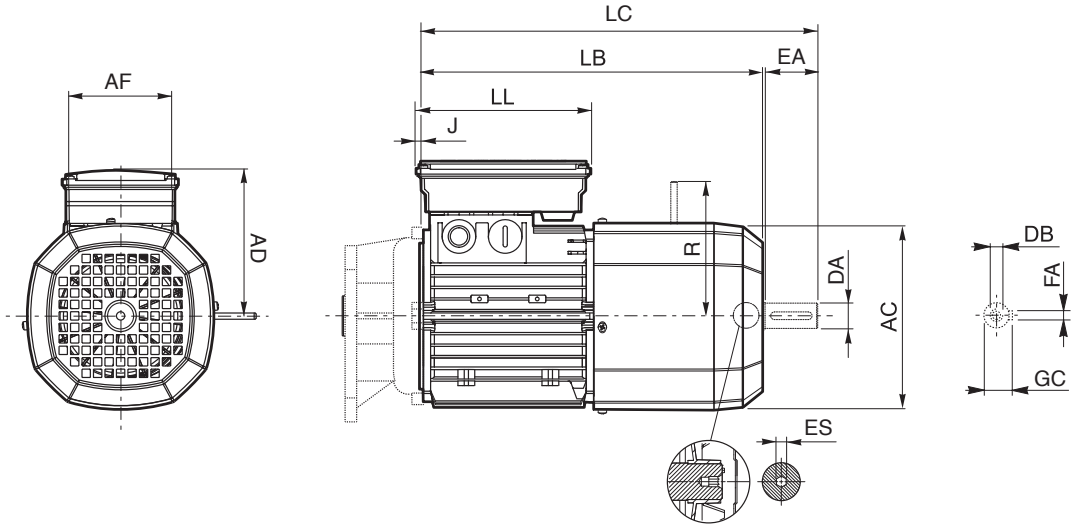

Dimensions are in Inch except when shown in *italic [mm]*

	Read shaft end					Motor									
	DA	**EA**	**DB**	**GC**	**FA**	**AC**	**LB**	**LC**	**AF**	**LL**	**J**	**AD**	**R FD FA**		**ES** (1)
MX 2SB	0.551	1.181	M5	0.630	0.197	6.929	13.661	14.921	4.331	6.496	0.669	5.748	5.079	5.276	0.236
MX 3SA	0.945	1.969	M8	1.063	0.315	7.677	13.976	16.024			0.276	6.102	6.299	6.299	
MX 3SB															
MX 3LA							15.630	17.717							
MX 3LB															
MX 4SA	1.102	2.362	M10	1.220		10.157	18.504	21.024	5.512	7.402		8.268	8.031	7.874	
MX 4SB							20.787	23.307							
MX 4LA														8.898	
MX 5SA	1.496	3.150	M12	1.614	0.394	12.205	21.969	25.354	7.362	7.362	0.669	9.646	10.472	9.724	—
MX 5SB							23.701	27.008							
MX 5LA															

N.B.:
1) “ES” hexagon is not present with PS option

4 P	1800 rpm - S1	60 Hz - IE2

P_n HP	P_n kW			n rpm	T_n lb•in	In 460V A	η% 100%	η% 75%	η% 50%	cos φ	I_s/I_n	T_s/T_n	T_a/T_n	KVA Code	J_m lb•ft²	IM B5 kg	IM B5 lbs
1	0.75	**BE 80B**	**4**	1745	36.3	1.46	82.5	81.1	77.6	0.78	7.6	3.5	3.2	K	0.0664	*12.2*	27
1.5	1.1	**BE 90S**	**4**	1740	53	2.25	84	82.7	79	0.73	7.7	3.5	3.2	L	0.0664	*13.6*	30
2	1.5	**BE 90LA**	**4**	1740	73	3.1	84.5	83.9	80.7	0.73	7.1	3.6	3.4	K	0.0807	*15.1*	33
3	2.2	**BE 100LA**	**4**	1745	106	4.2	87.5	85.5	83.2	0.76	7	3.3	2.9	J	0.1281	*22*	49
4	3	**BE 100LB**	**4**	1735	146	5.9	87.5	87.7	86.3	0.76	7	3.2	2.9	K	0.1448	*24*	53
5	3.7	**BE 112M**	**4**	1750	177	6.6	87.5	87.5	86.1	0.8	7.8	3.3	3.2	K	0.2492	*32*	71
7.5	5.5	**BE 132S**	**4**	1760	266	9.3	89.5	89.5	87.7	0.83	8.7	3.5	3.5	K	0.6407	*53*	117
10	7.5	**BE 132MA**	**4**	1760	363	12.7	89.5	89.5	87.9	0.83	8	3.4	3.3	K	0.7570	*59*	130
12.5	9.2	**BE 132MB**	**4**	1760	443	15.6	90	90	88.6	0.82	8.3	3.5	3.6	K	0.8543	*70*	154
15	11	**BE 160M**	**4**	1765	531	18.7	91	91	90	0.81	7.7	2.9	2.8	J	1.5425	*99*	218
20	15	**BE 160L**	**4**	1770	717	25.5	91	90.5	89.5	0.81	7.1	3.1	2.7	J	1.8747	*115*	254
25	18.5	**BE 180M**	**4**	1765	885	30.3	92.4	91.9	90.5	0.83	7.3	2.7	2.5	H	2.9663	*135*	298
30	22	**BE 180L**	**4**	1770	1053	36	92.4	92.5	92.2	0.83	8.1	3.3	3.2	J	3.9155	*157*	346

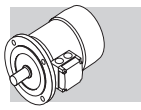

BE-ME

4 P	1800 rpm - S1	60 Hz - IE2

P_n HP	P_n kW			n rpm	T_n lb•in	In 460V A	η% 100%	η% 75%	η% 50%	cos φ	I_s/I_n	T_s/T_n	T_a/T_n	KVA Code	J_m lb•ft²	IM B5 kg	IM B5 lbs
1	0.75	**ME 2SB**	**4**	1745	36.3	1.46	82.5	81.1	77.6	0.78	7.6	3.5	3.2	K	0.0664	*10.9*	24
1.5	1.1	**ME 3SA**	**4**	1740	53	2.25	84	82.5	80.5	0.73	6	2.9	2.7	J	0.0807	*15.5*	34
2	1.5	**ME 3SB**	**4**	1740	73	3.3	84.5	84	83	0.71	6.3	3.1	2.9	K	0.0949	*17*	37
3	2.2	**ME 3LA**	**4**	1745	106	4.2	87.5	85.5	83.2	0.76	7	3.3	2.9	J	0.1281	*21*	46
4	3	**ME 3LB**	**4**	1735	146	5.9	87.5	87.7	86.3	0.76	7	3.2	2.9	K	0.1448	*23*	51
5	3.7	**ME 4SA**	**4**	1740	177	6.7	87.5	85.6	82.9	0.79	7	3.3	2.9	J	0.5055	*42*	93
7.5	5.5	**ME 4SB**	**4**	1760	266	9.3	89.5	89.5	87.7	0.83	8.7	3.5	3.5	K	0.6407	*51*	112
10	7.5	**ME 4LA**	**4**	1760	363	12.7	89.5	89.5	87.9	0.83	8	3.4	3.3	K	0.7570	*57*	126
12.5	9.2	**ME 4LB**	**4**	1760	443	15.6	90	90	88.6	0.82	8.3	3.5	3.6	K	0.8543	*65*	143
15	11	**ME 5SA**	**4**	1765	531	18.7	91	91	90	0.81	7.7	2.9	2.8	J	1.5425	*85*	187
20	15	**ME 5LA**	**4**	1770	717	25.5	91	90.5	89.5	0.81	7.1	3.1	2.7	J	1.8747	*101*	223

2 P	3000 rpm - S1	50 Hz - IE2

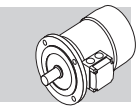

P_n HP	P_n kW			n rpm	T_n lb•in	In 400V A	η% 100%	η% 75%	η% 50%	cos φ	I_s/I_n	T_s/T_n	T_a/T_n	KVA Code	J_m lb•ft²	IM B5 Kg	IM B5 lbs
1	0.75	**BE 80A**	**2**	2860	22.1	1.65	80	79.6	76.4	0.83	6.8	3.8	3.5	J	0.0214	*9.5*	21
1.5	1.1	**BE 80B**	**2**	2845	32.7	2.35	81.5	82.2	79.9	0.83	6.9	3.8	3.1	J	0.0271	*11.3*	25
2	1.5	**BE 90SA**	**2**	2865	44.3	3.2	81.3	80.7	78.1	0.82	6.8	3.6	2.8	J	0.0297	*12.3*	27
3	2.2	**BE 90L**	**2**	2870	65	4.7	83.2	83.1	80.8	0.82	6.9	3.1	2.9	J	0.0396	*14*	31
4	3	**BE 100L**	**2**	2880	88	6.2	84.6	84.6	83.7	0.83	7.3	3.5	3.1	J	0.0925	*23*	51
5.5	4	**BE 112M**	**2**	2920	116	8.2	85.8	85.5	84.3	0.82	7.9	3.5	3.1	K	0.1353	*28*	62
7.5	5.5	**BE 132SA**	**2**	2925	159	10.6	87	85	81.7	0.86	8.5	3.6	3.3	K	0.3441	*42*	93
10	7.5	**BE 132SB**	**2**	2935	212	14.3	88.1	87.4	84.7	0.86	8.8	3.9	3.6	K	0.4224	*53*	117
12.5	9.2	**BE 132MB**	**2**	2920	266	16.4	88.8	86.5	84.2	0.91	8.4	3.7	3.3	J	0.4983	*65*	143
15	11	**BE 160MA**	**2**	2940	319	20	89.4	89.5	88	0.89	8.1	3	2.9	J	0.8068	*84*	185
20	15	**BE 160MB**	**2**	2950	434	27.2	90.5	90.5	89.5	0.88	8.5	3	2.8	K	0.9967	*97*	214
25	18.5	**BE 160L**	**2**	2945	531	32	90.9	90.5	89.8	0.91	7.7	2.9	2.7	H	1.1628	*109*	240

BE-ME

4 P	1500 rpm - S1	50 Hz - IE2

P_n HP	P_n kW			n rpm	T_n lb•in	In 400V A	η% 100%	η% 75%	η% 50%	cos φ	I_s/I_n	T_s/T_n	T_a/T_n	KVA Code	J_m lb•ft²	IM B5 Kg	IM B5 lbs
1	0.75	**BE 80B**	**4**	1430	44.3	1.65	81	80.5	78	0.81	6.1	3.2	3	H	0.0664	*12.2*	27
1.5	1.1	**BE 90S**	**4**	1430	65	2.53	82.5	82	79.5	0.76	6.3	2.9	2.8	J	0.0664	*13.6*	30
2	1.5	**BE 90LA**	**4**	1430	89	3.5	83.5	83	80	0.74	5.9	3.1	3	J	0.0807	*15.1*	33
3	2.2	**BE 100LA**	**4**	1430	130	4.9	85.4	85	84	0.76	5.8	3	2.8	H	0.1281	*22*	49
4	3	**BE 100LB**	**4**	1420	177	6.6	85.5	86	85.5	0.77	5.9	2.8	2.6	H	0.1448	*24*	53
5.5	4	**BE 112M**	**4**	1440	239	8.3	87	87	86	0.8	6.5	2.8	2.8	H	0.2492	*32*	71
7.5	5.5	**BE 132S**	**4**	1460	319	11.1	88.5	88.5	87.5	0.81	7.3	2.9	2.9	J	0.6407	*53*	117
10	7.5	**BE 132MA**	**4**	1460	434	14.8	89	89	88.5	0.82	6.9	2.9	2.8	H	0.7570	*59*	130
12.5	9.2	**BE 132MB**	**4**	1460	531	18.1	89.5	89.5	88.5	0.82	6.9	2.9	3	H	0.8543	*70*	154
15	11	**BE 160M**	**4**	1465	637	21.5	91	91.3	90.5	0.81	6.5	2.8	2.6	H	1.5425	*99*	218
20	15	**BE 160L**	**4**	1465	867	28.7	90.8	91	90.5	0.83	6.5	2.6	2.3	H	1.8747	*115*	254
25	18.5	**BE 180M**	**4**	1465	1071	35	91.6	92	91.3	0.83	6.5	2.6	2.5	H	2.9663	*135*	298
30	22	**BE 180L**	**4**	1465	1266	41	91.6	91.8	91.4	0.84	6.8	2.7	2.6	H	3.9155	*157*	346

6 P	1000 rpm - S1	50 Hz - IE2

P_n HP	P_n kW		n rpm	T_n lb•in	In 400V A	η% 100%	η% 75%	η% 50%	cos φ	I_s/I_n	T_s/T_n	T_a/T_n	KVA Code	J_m lb•ft²	IM B5 Kg	IM B5 lbs
1	0.75	**BE 90S 6**	935	68	2.06	75.9	75.9	73	0.69	5.1	3.1	2.9	J	0.0783	*15*	33
1.5	1.1	**BE 100M 6** (*)	945	98	2.75	78.1	76.2	73	0.74	4.9	2.2	1.9	G	0.1946	*22*	49
2	1.5	**BE 100LA 6**	945	135	3.9	79.8	77.5	74	0.72	5.6	2.5	2.3	J	0.2254	*24*	53
3	2.2	**BE 112M 6**	950	195	5.2	81.8	81.8	79.3	0.74	5.2	2.6	2.3	G	0.3987	*32*	71
4	3	**BE 132S 6**	955	266	6.6	83.3	83.3	82.4	0.79	6.1	2.1	1.9	H	0.7000	*44*	97
5.5	4	**BE 132MA 6**	965	354	8.7	84.6	85	83.1	0.79	6.9	2.2	2	J	0.9089	*56*	123
7.5	5.5	**BE 160MA 6** (*)	965	478	11.6	87	87	86.4	0.79	6.6	2.5	2.3	H	1.7561	*83*	183
10	7.5	**BE 160MB 6** (*)	965	655	15	88	88	87.2	0.82	6.6	2.3	2.1	H	2.3019	*103*	227

(*) Power /size relation not standardized

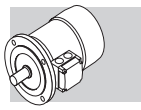

BE-ME

2 P	3000 rpm - S1	50 Hz - IE2

P_n HP	P_n kW			n rpm	T_n lb•in	In 400V A	η% 100%	η% 75%	η% 50%	cos φ	I_s/I_n	T_s/T_n	T_a/T_n	KVA Code	J_m lb•ft²	IM B9 Kg	IM B9 lbs
1	0.75	**ME 2SA**	**2**	2860	22	1.63	80	79.6	76.4	0.83	6.8	3.8	3.5	J	0.0214	*8.8*	19
1.5	1.1	**ME 2SB**	**2**	2845	33	2.35	81.5	82.2	79.9	0.83	6.9	3.8	3.1	J	0.0271	*10.6*	23
2	1.5	**ME 3SA**	**2**	2845	44	3.2	81.3	79	76	0.84	6.1	2.9	2.7	H	0.0570	*15.5*	34
3	2.2	**ME 3LA**	**2**	2895	65	4.8	83.2	83.2	81.5	0.8	6.3	2.7	2.5	H	0.0736	*18.7*	41
4	3	**ME 3LB**	**2**	2880	88	6.2	84.6	84.6	83.7	0.83	7.3	3.5	3.1	J	0.0925	*22*	49
5.5	4	**ME 4SA**	**2**	2900	117	7.8	85.8	84.5	82.2	0.87	7	2.9	2.8	H	0.2397	*33*	73
7.5	5.5	**ME 4SB**	**2**	2925	159	10.6	87	85	81.7	0.86	8.5	3.6	3.3	K	0.3441	*40*	88
10	7.5	**ME 4LA**	**2**	2935	212	14.3	88.1	87.4	84.7	0.86	8.8	3.9	3.6	K	0.4224	*51*	112
12.5	9.2	**ME 4LB**	**2**	2920	266	16.4	88.8	86.5	84.2	0.91	8.4	3.7	3.3	J	0.4983	*60*	132
15	11	**ME 5SA**	**2**	2940	319	20	89.4	89.5	88	0.89	8.1	3	2.9	J	0.8068	*70*	154
20	15	**ME 5SB**	**2**	2950	434	27.2	90.5	90.5	89.5	0.88	8.5	3	2.8	K	0.9967	*83*	183
25	18.5	**ME 5LA**	**2**	2945	531	32	90.9	90.5	89.8	0.91	7.7	2.9	2.7	H	1.1628	*95*	209

4 P	1500 rpm - S1	50 Hz - IE2

P_n HP	P_n kW			n rpm	T_n lb•in	In 400V A	η% 100%	η% 75%	η% 50%	cos φ	I_s/I_n	T_s/T_n	T_a/T_n	KVA Code	J_m lb•ft²	IM B9 Kg	IM B9 lbs
1	0.75	**ME 2SB**	**4**	1430	44	1.65	81	80.5	78	0.81	6.1	3.2	3	H	0.0664	*10.9*	24
1.5	1.1	**ME 3SA**	**4**	1430	65	2.6	82.5	82	79	0.74	5.5	2.5	2.8	H	0.0807	*15.5*	34
2	1.5	**ME 3SB**	**4**	1420	89	3.48	84	84	83	0.74	6.2	2.9	2.9	J	0.0949	*17*	37
3	2.2	**ME 3LA**	**4**	1430	130	4.89	85.4	85	84	0.76	5.8	3	2.8	H	0.1281	*21*	46
4	3	**ME 3LB**	**4**	1420	177	6.58	85.5	86	85.5	0.77	5.9	2.8	2.6	H	0.1448	*23*	51
5.5	4	**ME 4SA**	**4**	1440	239	8.25	87.5	86.8	84	0.8	7.1	3	3.1	J	0.5055	*42*	93
7.5	5.5	**ME 4SB**	**4**	1460	319	11.07	88.5	88.5	87.5	0.81	7.3	2.9	2.9	J	0.6407	*51*	112
10	7.5	**ME 4LA**	**4**	1460	434	14.83	89	89	88.5	0.82	6.9	2.9	2.8	H	0.7570	*57*	126
12.5	9.2	**ME 4LB**	**4**	1460	531	18.09	89.5	89.5	88.5	0.82	6.9	2.9	3	H	0.8543	*65*	143
15	11	**ME 5SA**	**4**	1465	637	21.54	91	91.3	90.5	0.81	6.5	2.8	2.6	H	1.5425	*85*	187
20	15	**ME 5LA**	**4**	1465	867	28.73	90.8	91	90.5	0.83	6.5	2.6	2.3	H	1.8747	*101*	223

6 P	1000 rpm - S1	50 Hz - IE2

P_n HP	P_n kW			n rpm	T_n lb•in	In 400V A	η% 100%	η% 75%	η% 50%	cos φ	I_s/I_n	T_s/T_n	T_a/T_n	KVA Code	J_m lb•ft²	IM B9 Kg	IM B9 lbs
1	0.75	**ME 3SA**	**6**	940	67	1.98	75.9	75	70.7	0.72	4.7	2.2	2	H	0.0783	*17*	37
1.5	1.1	**ME 3LA**	**6** (*)	945	98	2.75	78.1	76.2	73	0.74	4.9	2.2	1.9	G	0.1946	*21*	46
2	1.5	**ME 3LB**	**6**	945	135	3.8	79.8	77.5	74	0.72	5.6	2.5	2.3	J	0.2254	*23*	51
3	2.2	**ME 4SA**	**6**	955	195	4.9	81.8	81.8	80	0.8	5.7	1.9	1.7	H	0.5126	*34*	75
4	3	**ME 4SB**	**6**	955	266	6.6	83.3	83.3	82.4	0.79	6.1	2.1	1.9	H	0.7000	*43*	95
5.5	4	**ME 4LA**	**6**	965	354	8.6	84.6	85	83.1	0.79	6.9	2.2	2	J	0.9089	*54*	119
7.5	5.5	**ME 5SA**	**6** (*)	965	478	11.6	87	87	86.4	0.79	6.6	2.5	2.3	H	1.7561	*69*	152
10	7.5	**ME 5SB**	**6** (*)	965	655	15	88	88	87.2	0.82	6.6	2.3	2.1	H	2.3019	*89*	196

(*) Power /size relation not standardized

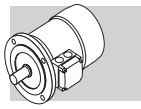

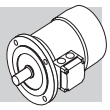

BE-ME

BE - IM B5

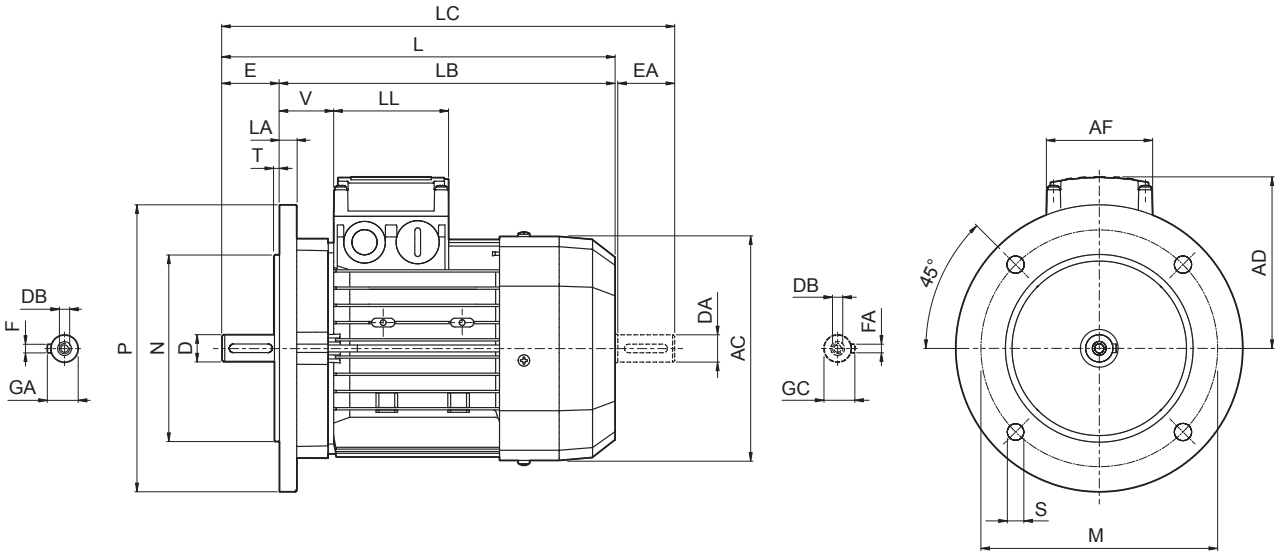

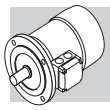

Dimensions are in [mm]

	Shaft					Flange						Motor							
	D DA	E EA	DB	GA GC	F FA	M	N	P	S	T	LA	AC	L	LB	LC	AD	AF	LL	V
BE 71	14	30	M5	16	5	130	110	160	9.5	3.5	10	138	249	219	281	108	74	80	37
BE 80	19	40	M6	21.5	6	165	130	200	11.5		11.5	156	274	234	315	119			38
BE 90 S	24	50	M8	27	8							176	326	276	378	133	98	98	44
BE 90 L																			
BE 100	28	60	M10	31		215	180	250	14	4	14	195	367	307	429	142			50
BE 112											15	219	385	325	448	157			52
BE 132 S	38	80	M12	41	10	265	230	300			20	258	493	413	576	193	118	118	58
BE 132 MA																			
BE 132 MB													528	448	611				
BE 160 M	42	110	M16	45	12	300	250	350	18.5	5	15	310	596	486	680	245	187	187	51
BE 160 L	38(1)	80(1)	M12(1)	41(1)	10(1)								640	530	724				
BE 180 M	48	110	M16	51.5	14						18	348	708	598	823	261			52
BE 180 L	42(1)	110(1)	M16(1)	45(1)	12(1)														

BE-ME

BE - IM B5

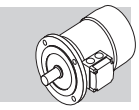

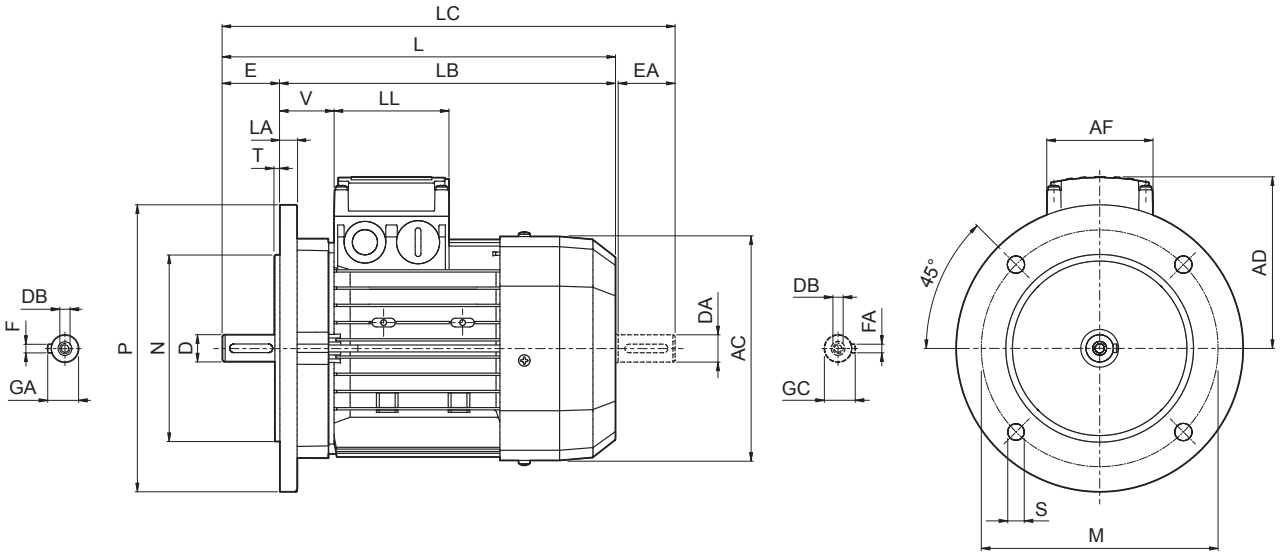

Dimensions are in Inch except when shown in *italic [mm]*

	Shaft					Flange						Motor							
	D DA	E EA	DB	GA GC	F FA	M	N	P	S	T	LA	AC	L	LB	LC	AD	AF	LL	V
BE 80	0.748	1.575	*M6*	0.846	0.236							6.142	10.787	9.213	12.402	4.685	2.913	3.150	1.496
BE 90 S	0.945	1.969	*M8*	1.063	0.315	6.496	5.118	7.874	0.453	0.138	0.453	6.929	12.835	10.866	14.882	5.236	3.858	3.858	1.732
BE 90 L																			
BE 100	1.102	2.362	*M10*	1.220		8.465	7.087	9.843	0.551	0.157	0.551	7.677	14.449	12.087	16.890	5.591			1.969
BE 112											0.591	8.622	15.157	12.795	17.638	6.181			2.047
BE 132 S	1.496	3.150	*M12*	1.614	0.394	10.433	9.055	11.811			0.787	10.157	19.409	16.260	22.677	7.598	4.646	4.646	2.283
BE 132 MA																			
BE 132 MB													20.787	17.638	24.055				
BE 160 M	1.654	4.331	*M16*	1.772	0.472	11.811	9.843	13.780	0.728	0.197	0.591	12.205	23.465	19.134	26.772	9.646	7.362	7.362	2.008
BE 160 L	1.496(1)	3.150(1)	*M12(1)*	1.615(1)	0.394(1)								25.197	20.866	28.504				
BE 180 M	1.890	4.331	*M16*	2.028	0.551						0.709	13.701	27.874	23.543	32.402	10.276			2.047
BE 180 L	1.654(1)	4.331(1)	*M16(1)*	1.772(1)	0.472(1)														

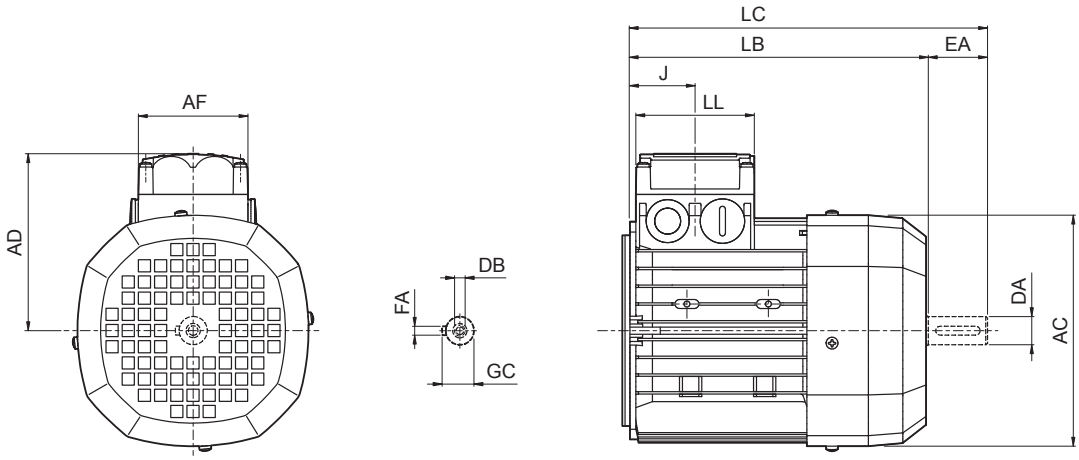

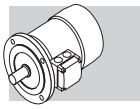

Dimensions are in [mm]

	Rear shaft end					Motor						
	DA	**EA**	**DB**	**FA**	**GC**	**AC**	**LB**	**LC**	**AF**	**LL**	**J**	**AD**
ME 2S	19	40	M6	6	21.5	156	202	245	74	80	44	119
ME 3S	28	60	M10	8	31	195	230	293	98	98	53.5	142
ME 3L							262	325				
ME 4S	38	80	M12	10	41	258	361	444	118	118	64.5	193
ME 4L												
ME 4LB							396	479				
ME 5S						310	418	502	187	187	77	245
ME 5L							462	546				

ME

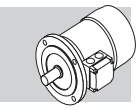

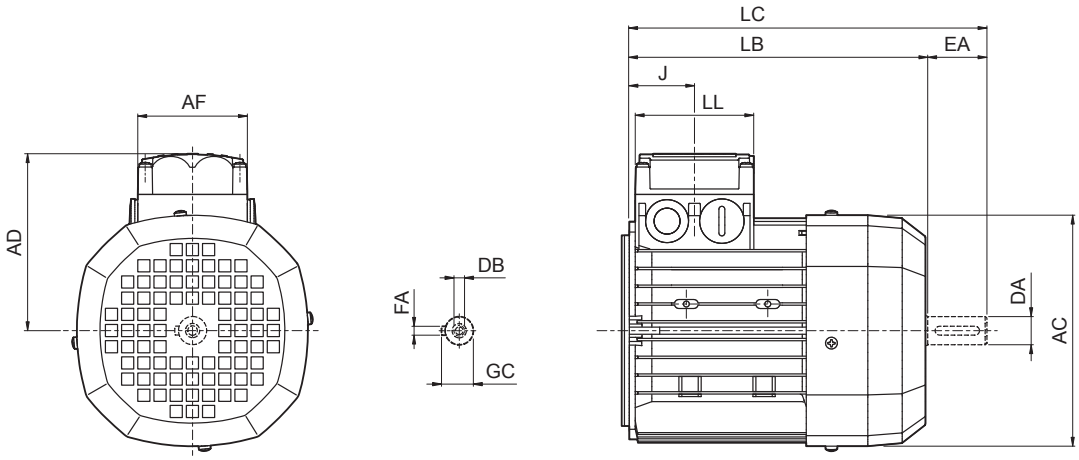

Dimensions are in Inch except when shown in *italic [mm]*

	Rear shaft end					Motor						
	DA	**EA**	**DB**	**FA**	**GC**	**AC**	**LB**	**LC**	**AF**	**LL**	**J**	**AD**
ME 2S	0.748	1.575	*M6*	0.236	0.846	6.142	7.953	9.646	2.913	3.150	1.732	4.685
ME 3S	1.102	2.362	*M10*	0.315	1.220	7.677	9.055	11.535	3.858	3.858	2.106	5.591
ME 3L							10.315	12.795				
ME 4S	1.496	3.150	*M12*	0.394	1.614	10.157	14.213	17.480	4.646	4.646	2.539	7.598
ME 4L												
ME 4LB							15.591	18.858				
ME 5S						12.205	16.457	19.764	7.362	7.362	3.031	9.646
ME 5L							18.189	21.496				

2P — 3600 rpm - S1 — 60 Hz

P_n hp	P_n kW			n rpm	T_n lb•in	η %	cosφ	I_n 460V A	I_s/I_n	T_s/T_n	T_a/T_n	KVA Code	J_m lb•ft²	IM B5 kg	IM B5 lbs	d.c. brake FD Mod	T_b lb•in	Z_o 1/h NB	Z_o 1/h SB	J_m lb•ft²	IM B5 kg	IM B5 lbs	a.c. brake FA Mod	T_b lb•in	Z_o 1/h	J_m lb•ft²	IM B5 kg	IM B5 lbs
0.25	0.18	**BN 63A**	**2**	3360	4.7	58	0.74	0.55	3.7	2.9	2.4	H	0.0048	*3.5*	7.7	**FD 02**	15	2700	3300	0.0062	*4.9*	10.7	**FA 02**	15	3300	0.0062	*5.0*	11
0.33	0.25	**BN 63B**	**2**	3370	6.2	61	0.73	0.69	4.2	2.9	2.9	H	0.0055	*3.9*	8.6	**FD 02**	15	2700	3300	0.0071	*5.2*	11.5	**FA 02**	15	3300	0.0071	*5.4*	11.9
0.5	0.37	**BN 71A**	**2**	3420	9.2	71	0.77	0.86	5.8	3.3	3.1	J	0.0082	*5.4*	11.9	**FD 03**	30	2400	3200	0.0109	*7.5*	16.6	**FA 03**	30	3200	0.0109	*7.8*	17.2
0.75	0.55	**BN 71B**	**2**	3450	13.7	76	0.75	1.23	6.2	3.4	3.4	K	0.0097	*6.2*	13.7	**FD 03**	44	2200	2700	0.0126	*8.3*	18.2	**FA 03**	44	2700	0.0126	*8.6*	19
1	0.75	**BN 80A**	**2**	3440	18.3	76	0.76	1.62	5.9	3.1	2.8	J	0.0185	*8.6*	19	**FD 04**	44	1400	1700	0.0223	*11.8*	26	**FA 04**	44	1700	0.0223	*12.2*	27
1.5	1.1	**BN 80B**	**2**	3430	27.6	77	0.76	2.4	6.2	3.8	2.9	J	0.0214	*9.5*	21	**FD 04**	88	1200	1600	0.0252	*12.2*	27	**FA 04**	88	1600	0.0252	*13.2*	29
2	1.5	**BN 90SA**	**2**	3480	36.2	79	0.78	3.04	7.3	3.6	3.2	K	0.0297	*12.2*	27	**FD 14**	133	750	1000	0.0335	*15.4*	34	**FA 14**	133	1000	0.0335	*16.3*	36
3	2.2	**BN 90L**	**2**	3490	54	81	0.79	4.4	7.3	3.8	3.3	K	0.0397	*14.1*	31	**FD 05**	230	750	1000	0.0435	*18.6*	41	**FA 05**	230	1000	0.0435	*21*	46
5	3.7	**BN 100LB**	**2**	3490	90	84	0.83	6.7	6.7	2.9	3.3	J	0.0926	*23*	51	**FD 15**	354	360	500	0.102	*27*	59	**FA 15**	354	500	0.102	*30*	66
7.5	5.5	**BN 132SA**	**2**	3490	135	83	0.86	9.8	6.4	2.7	2.6	H	0.240	*35*	77	**FD 06**	440		400	0.266	*44*	98	**FA 06**	440	400	0.266	*49*	108
10	7.5	**BN 132SB**	**2**	3490	181	82	0.88	13	6.2	2.8	2.7	H	0.318	*42*	93	**FD 06**	440		350	0.344	*51*	113	**FA 06**	440	350	0.344	*56*	123
15	11	**BN 160MR**	**2**	3510	271	87	0.88	18.3	6.9	2.7	2.9	H	0.499	*65*	143													
20	15	**BN 160MB**	**2**	3510	359	86	0.9	24.2	6	2.5	2.8	G	0.808	*84*	185													
25	18.5	**BN 160L**	**2**	3520	449	88	0.91	29.2	6.9	2.8	2.7	H	0.998	*97*	214													
30	22	**BN 180M**	**2**	3520	537	88	0.91	35.1	6.9	2.8	2.8	H	1.164	*109*	240													
40	30	**BN 200LA**	**2**	3530	716	89	0.91	46.2	6.9	2.6	3.5	H	1.829	*140*	309													

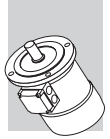

4P — 1800 rpm - S1 — 60 Hz

P_n hp	P_n kW		n rpm	T_n lb•in	η %	cosφ	I_n 460V A	I_s/I_n	T_s/T_n	T_a/T_n	KVA Code	J_m lb•ft²	IM B5 kg	IM B5 lbs	d.c. brake FD Mod	T_b lb•in	Z_o 1/h NB	Z_o 1/h SB	J_m lb•ft²	IM B5 kg	IM B5 lbs	a.c. brake FA Mod	T_b lb•in	Z_o 1/h	J_m lb•ft²	IM B5 kg	IM B5 lbs
0.08	0.06	**BN 56A 4**	1670	3	53	0.55	0.26	2.9	3.1	2.5	J	0.0036	*3.1*	6.8													
0.12	0.09	**BN 56B 4**	1670	4.5	59	0.52	0.37	2.8	2.9	3.0	H	0.0036	*3.1*	6.8													
0.16	0.12	**BN 63A 4**	1650	6.1	55	0.64	0.43	3.1	2.4	2.2	H	0.0048	*3.5*	7.7	**FD 02**	15	7000	9000	0.0062	*5.2*	11.5	**FA 02**	15	9000	0.0062	*5.0*	11
0.25	0.18	**BN 63B 4**	1670	9.4	58	0.59	0.68	3.1	2.8	2.4	H	0.0055	*3.9*	8.6	**FD 02**	30	7000	9000	0.0071	*5.6*	12.3	**FA 02**	30	9000	0.0071	*5.4*	11.9
0.33	0.25	**BN 71A 4**	1700	12.2	64	0.74	0.65	4.3	2.6	2.1	H	0.0138	*5.1*	11.2	**FD 03**	30	6000	8500	0.0164	*7.8*	17.2	**FA 03**	30	8500	0.0164	*7.5*	16.5
0.5	0.37	**BN 71B 4**	1700	18.5	66	0.73	0.97	4.5	2.6	2.4	H	0.0164	*5.9*	13	**FD 03**	44	4800	7500	0.0190	*8.6*	19	**FA 03**	44	7500	0.0190	*8.3*	18.3
0.75	0.55	**BN 80A 4**	1710	27.6	73	0.75	1.28	4.9	3	2.4	H	0.0356	*8.2*	18.1	**FD 04**	89	3400	7000	0.0394	*12.2*	27	**FA 04**	89	7000	0.0394	*11.8*	26
1	0.75	**BN 80B 4**	1720	36.6	78	0.75	1.6	6.2	3.4	3.1	J	0.0482	*10.0*	22	**FD 04**	133	3000	6000	0.0523	*13.6*	30	**FA 04**	133	6000	0.0523	*13.6*	30
1.5	1.1	**BN 90S 4**	1720	55	78	0.74	2.43	5.7	3.1	2.7	J	0.0499	*12.2*	27	**FD 14**	133	3000	7000	0.0546	*16.3*	36	**FA 14**	133	7000	0.0546	*16.3*	36
2	1.5	**BN 90LA 4**	1720	73	81	0.74	3.12	6.6	3.3	3.0	K	0.0665	*13.6*	30	**FD 05**	230	2200	4700	0.076	*19.5*	43	**FA 05**	230	4700	0.076	*20*	45
3	2.2	**BN 100LA 4**	1720	110	81	0.73	4.8	5.5	2.7	2.4	H	0.096	*18.1*	40	**FD 15**	354	1000	2700	0.105	*25*	55	**FA 15**	354	2700	0.105	*25*	55
5	3.7	**BN 100LC 4**	1730	182	84	0.74	7.5	5.6	2.8	2.9	K	0.145	*25*	55	**FD 55**	480		1200	0.154	*30*	66	**FA 15**	354	1200	0.154	*29*	64
5.5	4	**BN 112M 4**	1730	200	85	0.76	8	7	3.1	3.0	K	0.233	*30*	66	**FD 06S**	530		850	0.254	*40*	88	**FA 06S**	530	850	0.254	*42*	93
7.5	5.5	**BN 132S 4**	1730	273	84	0.84	10	6.3	2.9	2.6	H	0.506	*44*	97	**FD 56**	664		850	0.530	*57*	126	**FA 06**	664	850	0.530	*58*	128
10	7.5	**BN 132MA 4**	1740	362	85	0.84	13.1	6.1	2.9	2.9	H	0.641	*53*	117	**FD 06**	885		700	0.665	*66*	146	**FA 07**	885	700	0.665	*71*	157
15	11	**BN 160MR 4**	1740	543	88	0.81	19.4	6.5	3.1	3.0	H	0.855	*70*	154	**FD 07**	1328		600	0.907	*86*	190	**FA 07**	1328	600	0.907	*88*	194
20	15	**BN 160L 4**	1750	720	90	0.84	24.8	5.8	2.3	2.5	G	1.544	*99*	218	**FD 08**	1770		400	1.722	*129*	284	**FA 08**	1770	400	1.722	*128*	282
25	18.5	**BN 180M 4**	1760	895	90	0.83	31.3	5.8	2.5	3.0	G	1.876	*115*	254	**FD 08**	2210		300	2.054	*145*	320	**FA 08**	2210	300	2.054	*144*	317

6P — 1200 rpm - S1 — 60 Hz

P_n hp	P_n kW			n rpm	T_n lb•in	η %	cosφ	I_n 460V A	I_s/I_n	T_s/T_n	T_a/T_n	KVA Code	J_m lb•ft²	IM B5 kg	IM B5 lbs	d.c. brake FD Mod	T_b lb•in	Z_o 1/h NB	Z_o 1/h SB	J_m lb•ft²	IM B5 kg	IM B5 lbs	a.c. brake FA Mod	T_b lb•in	Z_o 1/h	J_m lb•ft²	IM B5 kg	IM B5 lbs
0.12	0.09	**BN 63A**	**6**	1100	6.9	47	0.5	0.48	2.8	2.9	2.3	K	0.0081	*4.6*	10.1	**FD 02**	30	7000	10000	0.0095	*6.3*	13.9	**FA 02**	30	10000	0.0095	*6.1*	13.4
0.16	0.12	**BN 63B**	**6**	1100	9.2	50	0.55	0.55	2.4	2.4	2.2	H	0.0088	*4.9*	10.8	**FD 02**	30	7000	10000	0.0102	*6.6*	14.6	**FA 02**	30	10000	0.0102	*6.4*	14.1
0.25	0.18	**BN 71A**	**6**	1100	14.3	61	0.65	0.57	3.3	2.6	2.0	G	0.0200	*5.5*	12.1	**FD 03**	44	6500	10000	0.0226	*8.2*	18.1	**FA 03**	44	10000	0.0226	*7.9*	17.4
0.33	0.25	**BN 71B**	**6**	1100	18.9	64	0.65	0.75	3.2	2.6	2.1	G	0.0259	*6.7*	14.8	**FD 03**	44	6200	8000	0.0285	*9.5*	21	**FA 03**	44	8000	0.0285	*9.1*	20
0.5	0.37	**BN 80A**	**6**	1130	27.9	67	0.65	1.07	3.9	2.6	2.5	H	0.0499	*10.0*	22	**FD 04**	88	4100	5500	0.0546	*13.6*	30	**FA 04**	88	5500	0.0546	*13.6*	30
0.75	0.55	**BN 80B**	**6**	1140	41.4	76	0.66	1.38	4.9	3.2	2.7	J	0.0594	*11.3*	25	**FD 04**	133	3800	5000	0.0641	*15.4*	34	**FA 04**	133	5000	0.0641	*15.0*	33
1	0.75	**BN 90S**	**6**	1140	55	73	0.63	2.05	4.5	2.9	2.8	K	0.0618	*13.2*	29	**FD 14**	133	2700	4000	0.0665	*16.8*	37	**FA 14**	133	4000	0.0665	*16.8*	37
1.5	1.1	**BN 90L**	**6**	1140	83	75	0.65	2.83	4.3	2.8	2.4	H	0.0784	*15.0*	33	**FD 05**	230	2000	3500	0.0879	*21*	46	**FA 05**	230	3500	0.0879	*22*	49
2	1.5	**BN 100LA**	**6**	1140	111	76	0.66	3.75	4.5	2.4	2.4	H	0.195	*22*	49	**FD 15**	354	1500	3000	0.204	*28*	62	**FA 15**	354	3000	0.204	*29*	64
3	2.2	**BN 112M**	**6**	1150	164	81	0.69	4.9	5.5	2.8	2.4	J	0.400	*32*	71	**FD 06S**	530		1250	0.420	*42*	93	**FA 06S**	530	1250	0.420	*44*	97
5	3.7	**BN 132MA**	**6**	1150	274	80	0.79	7.3	6.1	2.5	2.3	J	0.701	*44*	97	**FD 06**	885		900	0.724	*58*	128	**FA 07**	885	900	0.724	*63*	139
7.5	5.5	**BN 132MB**	**6**	1140	414	82	0.75	11.2	5.4	2.7	2.3	H	0.910	*56*	123	**FD 07**	1328		800	0.964	*72*	159	**FA 07**	1328	800	0.964	*74*	163
10	7.5	**BN 160M**	**6**	1160	543	85	0.82	13.5	5.8	2.3	2.4	G	1.758	*83*	183	**FD 08**	1500		550	1.936	*112*	247	**FA 08**	1500	550	1.936	*113*	249
15	11	**BN 160L**	**6**	1160	815	84	0.83	19.8	5.8	2.5	2.7	G	2.304	*103*	227	**FD 08**	1770		400	2.482	*133*	293	**FA 08**	1770	400	2.482	*133*	293

BN-M

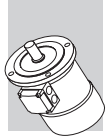

2P — 3600 rpm - S1 — 60 Hz

P_n hp	P_n kW			n rpm	T_n lb•in	η %	cosφ	I_n 460V A	I_s/I_n	T_s/T_n	T_a/T_n	KVA Code	J_m lb•ft²	IM B5 kg	IM B5 lbs	d.c. brake FD Mod	T_b lb•in	Z_o 1/h NB	Z_o 1/h SB	J_m lb•ft²	IM B5 kg	IM B5 lbs	a.c. brake FA Mod	T_b lb•in	Z_o 1/h	J_m lb•ft²	IM B5 kg	IM B5 lbs
0.25	0.18	**M 05A**	**2**	3380	4.7	60	0.74	0.53	4.1	3	2.4	H	0.0048	*3.2*	7.1	**FD 02**	15	2700	3300	0.0062	*4.9*	10.8	**FA 02**	15	3300	0.0062	*4.7*	10.4
0.33	0.25	**M 05B**	**2**	3400	6.1	65	0.75	0.63	4.9	3.2	2.9	J	0.0055	*3.6*	7.9	**FD 02**	15	2700	3300	0.0071	*5.3*	11.7	**FA 02**	15	3300	0.0071	*5.1*	11.2
0.5	0.37	**M 05C**	**2**	3420	9.2	69	0.76	0.89	5.5	3.3	3.2	J	0.0062	*4.8*	10.6	**FD 02**	30	2500	3000	0.0078	*6.5*	14.3	**FA 02**	30	3000	0.0078	*6.3*	13.9
0.75	0.55	**M 1SD**	**2**	3450	13.7	76	0.75	1.23	6.2	3.4	3.4	K	0.0097	*5.8*	12.8	**FD 03**	44	2200	2700	0.0126	*8.5*	18.7	**FA 03**	44	2700	0.0126	*8.2*	18.1
1	0.75	**M 1LA**	**2**	3440	18.3	77	0.75	1.62	6.2	3.8	3.5	K	0.0119	*6.9*	15.2	**FD 03**	44	1500	2100	0.0145	*9.5*	21	**FA 03**	44	2100	0.0145	*9.5*	21
1.5	1.1	**M 2SA**	**2**	3430	27.6	77	0.76	2.4	6.2	3.8	2.9	J	0.0214	*8.8*	19.4	**FD 04**	88	1200	1600	0.0252	*12.7*	28	**FA 04**	88	1600	0.0252	*12.7*	28
2	1.5	**M 2SB**	**2**	3420	36.8	80	0.81	2.89	6	3.3	2.9	H	0.0271	*10.4*	23	**FD 04**	133	1000	1300	0.0309	*14.5*	32	**FA 04**	133	1300	0.0309	*14.5*	32
3	2.2	**M 3SA**	**2**	3430	55	81	0.83	4.2	6	2.4	3.2	H	0.0570	*15.4*	34	**FD 15**	230	800	1000	0.0665	*22*	49	**FA 15**	230	1000	0.0665	*23*	51
5	3.7	**M 3LB**	**2**	3490	92	84	0.83	6.7	6.7	2.9	3.2	J	0.0926	*22*	49	**FD 15**	354	360	500	0.102	*28*	62	**FA 15**	354	500	0.102	*29*	64
7.5	5.5	**M 4SA**	**2**	3490	135	83	0.86	9.8	6.4	2.7	2.6	H	0.240	*33*	72	**FD 06**	440		400	0.266	*46*	101	**FA 06**	440	400	0.266	*47*	104
10	7.5	**M 4SB**	**2**	3490	181	82	0.88	13	6.2	2.8	2.7	H	0.318	*40*	88	**FD 06**	440		350	0.344	*53*	117	**FA 06**	440	350	0.344	*65*	143
15	11	**M 4LC**	**2**	3510	271	87	0.88	18.3	6.9	2.7	2.9	H	0.499	*60*	132													
20	15	**M 5SB**	**2**	3510	359	86	0.9	24.2	6	2.5	2.8	G	0.808	*70*	154													
25	18.5	**M 5SC**	**2**	3520	449	88	0.91	29.2	6.9	2.8	2.7	H	0.998	*83*	183													
30	22	**M 5LA**	**2**	3520	537	88	0.91	35.1	6.9	2.8	2.8	H	1.164	*95*	209													

4P — 1800 rpm - S1 — 60 Hz

P_n hp	P_n kW			n rpm	T_n lb•in	η %	cosφ	I_n 460V A	I_s/I_n	T_s/T_n	T_a/T_n	KVA Code	J_m lb•ft²	IM B5 kg	IM B5 lbs	d.c. brake FD Mod	T_b lb•in	Z_o 1/h NB	Z_o 1/h SB	J_m lb•ft²	IM B5 kg	IM B5 lbs	a.c. brake FA Mod	T_b lb•in	Z_o 1/h	J_m lb•ft²	IM B5 kg	IM B5 lbs
0.12	0.09	**M 0B**	**4**	1670	4.5	59	0.52	0.37	2.8	2.9	3.0	H	0.0036	*2.9*	6.4														
0.16	0.12	**M 05A**	**4**	1690	6	60	0.57	0.44	3.3	2.4	2.3	J	0.0048	*3.2*	7.1	**FD 02**	15	7000	9000	0.0062	*4.9*	10.8	**FA 02**	15	9000	0.0062	*4.7*	10.4
0.25	0.18	**M 05B**	**4**	1670	9.4	58	0.6	0.65	3.2	2.8	2.4	G	0.0055	*3.6*	7.9	**FD 02**	30	7000	9000	0.0071	*5.3*	11.7	**FA 02**	30	9000	0.0071	*5.1*	11.2
0.33	0.25	**M 05C**	**4**	1670	12.4	64	0.64	0.77	3.3	2.5	2.4	G	0.0078	*4.8*	10.6	**FD 02**	30	6000	8000	0.0093	*6.5*	14.3	**FA 02**	30	8000	0.0093	*6.3*	13.9
0.5	0.37	**M 1SD**	**4**	1700	18.5	66	0.73	0.96	4.5	2.6	2.4	G	0.0164	*5.5*	12.1	**FD 03**	44	4800	7500	0.0190	*8.2*	18.1	**FA 03**	44	7500	0.0190	*7.9*	17.4
0.75	0.55	**M 1LA**	**4**	1710	27.6	72	0.7	1.37	4.9	3	2.8	J	0.0216	*6.9*	15.2	**FD 53**	66	3400	7000	0.0242	*9.5*	21	**FA 53**	66	7000	0.0242	*9.5*	21
1	0.75	**M 2SA**	**4**	1720	36.6	78	0.75	1.61	6.2	3.4	3.1	J	0.0482	*9.1*	20	**FD 04**	133	3000	6000	0.0523	*13.2*	29	**FA 04**	133	6000	0.0523	*13.2*	29
1.5	1.1	**M 2SB**	**4**	1720	55	78	0.76	2.33	6.3	3.4	3.0	J	0.0594	*10.4*	23	**FD 04**	133	2000	4200	0.0641	*14.5*	32	**FA 04**	133	4200	0.0641	*14.5*	32
2	1.5	**M 3SA**	**4**	1720	73	82	0.73	3.15	5.7	2.9	2.6	J	0.0808	*15.4*	34	**FD 15**	230	1500	3000	0.0903	*22*	49	**FA 15**	230	3000	0.0903	*23*	51
3	2.2	**M 3LA**	**4**	1720	110	81	0.73	4.67	5.5	2.7	2.4	H	0.096	*16.8*	37	**FD 15**	354	1000	2700	0.105	*24*	53	**FA 15**	354	2700	0.105	*24*	53
5	3.7	**M 3LC**	**4**	1730	182	84	0.74	7.5	5.6	2.8	2.9	H	0.145	*23*	51	**FD 55**	480		1200	0.154	*29*	64	**FA 15**	354	1200	0.154	*30*	66
7.5	5.5	**M 4SA**	**4**	1730	273	84	0.84	9.8	6.3	2.9	2.6	H	0.506	*42*	93	**FD 56**	664		850	0.530	*55*	121	**FA 06**	664	850	0.530	*56*	124
10	7.5	**M 4LA**	**4**	1740	362	85	0.84	13.2	6.1	2.9	2.9	H	0.641	*51*	112	**FD 06**	885		700	0.665	*64*	141	**FA 06**	885	700	0.665	*65*	143
15	11	**M 4LC**	**4**	1740	543	88	0.81	19.4	6.5	3.1	3.0	H	0.855	*65*	143	**FD 07**	1328		600	0.907	*81*	179	**FA 07**	1328	600	0.907	*83*	183
20	15	**M 5SB**	**4**	1750	720	90	0.84	24.9	5.8	2.3	2.5	G	1.544	*85*	187	**FD 08**	1770		400	1.781	*115*	254	**FA 08**	1770	400	1.781	*114*	251
25	18.5	**M 5LA**	**4**	1760	895	90	0.83	31.1	5.8	2.5	3.0	G	1.876	*101*	223	**FD 08**	2210		300	2.054	*131*	289	**FA 08**	2210	300	2.054	*130*	287

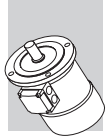

6P — 1200 rpm - S1 — 60 Hz

P_n hp	P_n kW			n rpm	T_n lb•in	η %	cosφ	I_n 460V A	I_s/I_n	T_s/T_n	T_a/T_n	KVA Code	J_m lb•ft²	IM B5 kg	IM B5 lbs	d.c. brake FD Mod	T_b lb•in	Z_o 1/h NB	Z_o 1/h SB	J_m lb•ft²	IM B5 kg	IM B5 lbs	a.c. brake FA Mod	T_b lb•in	Z_o 1/h	J_m lb•ft²	IM B5 kg	IM B5 lbs
0.12	0.09	**M 05A**	**6**	1100	6.9	47	0.46	0.52	2.4	2.9	2.3	K	0.0081	*4.3*	9.5	**FD 02**	30	7000	10000	0.0095	*6.0*	13.2	**FA 02**	30	10000	0.0095	*5.8*	12.8
0.16	0.12	**M 05B**	**6**	1100	9.2	49	0.54	0.57	2.3	2.4	2.2	H	0.0088	*4.6*	10.1	**FD 02**	30	7000	10000	0.0102	*6.3*	13.9	**FA 02**	30	10000	0.0102	*6.1*	13.4
0.25	0.18	**M 1SC**	**6**	1100	14.3	61	0.65	0.57	3.3	2.6	2.0	G	0.0200	*5.1*	11.2	**FD 03**	44	6500	10000	0.0226	*7.8*	17.2	**FA 03**	44	10000	0.0226	*7.5*	16.5
0.33	0.25	**M 1SD**	**6**	1100	18.9	64	0.65	0.75	3.2	2.6	2.1	G	0.0259	*6.3*	13.9	**FD 03**	44	6200	8000	0.0290	*9.0*	19.8	**FA 03**	44	8000	0.0290	*8.7*	19.2
0.5	0.37	**M 1LA**	**6**	1100	28.6	66	0.65	1.08	3.3	2.6	2.4	G	0.0306	*7.3*	16.1	**FD 53**	66	4000	7000	0.0330	*10.0*	22	**FA 03**	66	7000	0.0330	*9.5*	21
0.75	0.55	**M 2SA**	**6**	1140	41.4	76	0.66	1.38	4.9	3.2	2.7	J	0.0594	*10.4*	23	**FD 04**	133	3800	5000	0.0641	*14.5*	32	**FA 04**	133	5000	0.0641	*14.5*	32
1	0.75	**M 2SB**	**6**	1140	55	76	0.61	2.03	4.4	2.8	2.8	J	0.0665	*11.3*	25	**FD 04**	133	2700	5000	0.0713	*15.4*	34	**FA 04**	133	5000	0.0713	*15.4*	34
1.5	1.1	**M 3SA**	**6**	1140	83	74	0.68	2.74	4.4	2.4	2.2	H	0.147	*16.8*	37	**FD 15**	230	2300	4500	0.157	*23*	51	**FA 15**	230	4500	0.157	*24*	53
2	1.5	**M 3LA**	**6**	1140	111	76	0.66	3.75	4.5	2.4	2.4	H	0.195	*21*	46	**FD 15**	354	1500	3000	0.204	*27*	60	**FA 15**	354	3000	0.204	*28*	62
3	2.2	**M 3LC**	**6**	1140	166	77	0.68	5.3	5.1	2.6	2.6	J	0.226	*23*	51	**FD 55**	480		1500	0.235	*29*	64	**FA 15**	354	1500	0.235	*30*	66
5	3.7	**M 4LA**	**6**	1150	274	80	0.79	7.3	6.1	2.5	2.3	H	0.701	*43*	95	**FD 06**	885		900	0.724	*56*	123	**FA 06**	885	900	0.724	*57*	126
7.5	5.5	**M 4LB**	**6**	1140	414	82	0.75	11.2	5.4	2.7	2.3	H	0.910	*54*	119	**FD 07**	1328		800	0.964	*70*	154	**FA 07**	1328	800	0.964	*72*	159
10	7.5	**M 5SA**	**6**	1160	543	85	0.82	13.5	5.8	2.3	2.4	G	1.758	*69*	152	**FD 08**	1500		550	1.936	*98*	216	**FA 08**	1500	550	1.936	*98*	216
15	11	**M 5SB**	**6**	1160	815	84	0.83	19.8	5.8	2.5	2.7	G	2.304	*89*	196	**FD 08**	1770		400	2.482	*119*	262	**FA 08**	1770	400	2.482	*118*	260

2P — 3000 rpm - S1 — 50 Hz

P_n kW	P_n HP			n rpm	T_n lb•in	IE1	η (100%) %	η (75%) %	η (50%) %	cosφ	In 400V A	I_s/I_n	T_s/T_n	T_a/T_n	KVA Code	J_m lb•ft²	IM B5 Kg	IM B5 lbs	d.c. brake FD Mod	T_b lb•in	Z_o 1/h NB	Z_o 1/h SB	J_m lb•ft²	IM B5 Kg	IM B5 lbs	a.c. brake FA Mod	T_b lb•in	Z_o 1/h	J_m lb•ft²	IM B5 Kg	IM B5 lbs
0.18	0.25	**BN 63A**	**2**	2730	5.6	○	59.9	56.9	51.9	0.77	0.56	3.0	2.1	2.0	E	0.0005	*3.5*	7.7	**FD 02**	15	3900	4800	0.0006	*5.2*	11	**FA 02**	15	4800	0.0006	*5.0*	11
0.25	0.33	**BN 63B**	**2**	2740	7.7	○	66.0	64.8	64.8	0.76	0.72	3.3	2.3	2.3	E	0.0005	*3.9*	8.6	**FD 02**	15	3900	4800	0.0007	*5.6*	12	**FA 02**	15	4800	0.0007	*5.4*	12
0.37	0.5	**BN 63C**	**2**	2800	11.2	○	69.1	66.8	66.8	0.78	0.99	3.9	2.6	2.6	F	0.0008	*5.1*	11	**FD 02**	31	3600	4500	0.0009	*6.8*	15	**FA 02**	31	4500	0.0009	*6.6*	15
0.37	0.5	**BN 71A**	**2**	2820	11.1	○	73.8	73.0	70.6	0.76	0.95	4.8	2.8	2.6	H	0.0008	*5.4*	12	**FD 03**	31	3000	4100	0.0011	*8.1*	18	**FA 03**	31	4200	0.0011	*7.8*	17
0.55	0.75	**BN 71B**	**2**	2820	16.5	○	76.0	75.8	74.8	0.76	1.37	5.0	2.9	2.8	H	0.0010	*6.2*	14	**FD 03**	44	2900	4200	0.0013	*8.9*	20	**FA 03**	44	4200	0.0013	*8.6*	19
0.75	1	**BN 71C**	**2**	2810	23.0	○	76.6	76.2	76.2	0.76	1.86	5.1	3.1	2.8	H	0.0012	*7.3*	16	**FD 03**	44	1900	3300	0.0014	*10.0*	22	**FA 03**	44	3600	0.0014	*9.7*	21
0.75	1	**BN 80A**	**2**	2810	23.0	•	76.2	75.5	68.3	0.81	1.75	4.8	2.6	2.2	G	0.0019	*8.6*	19	**FD 04**	44	1700	3200	0.0022	*12.5*	28	**FA 04**	44	3200	0.0022	*12.4*	27
1.1	1.5	**BN 80B**	**2**	2800	33.6	•	76.4	76.2	75.0	0.81	2.57	4.8	2.8	2.4	G	0.0021	*9.5*	21	**FD 04**	89	1500	3000	0.0025	*13.4*	30	**FA 04**	89	3000	0.0025	*13.3*	29
1.5	2	**BN 80C**	**2**	2800	45	•	79.1	79.5	77.2	0.81	3.4	4.9	2.7	2.4	G	0.0027	*11.3*	25	**FD 04**	133	1300	2600	0.0031	*15.2*	34	**FA 04**	133	2600	0.0031	*15.1*	33
1.5	2	**BN 90SA**	**2**	2870	44	•	82.0	81.5	78.1	0.80	3.4	5.9	2.7	2.6	H	0.0030	*12.3*	27	**FD 14**	133	900	2200	0.0033	*16.5*	36	**FA 14**	133	2200	0.0033	*16.4*	36
1.85	2.5	**BN 90SB**	**2**	2880	54	•	82.5	82.0	75.4	0.80	4.0	6.2	2.9	2.6	H	0.0040	*14*	31	**FD 14**	133	900	2200	0.0043	*18.2*	40	**FA 14**	133	2200	0.0043	*18.1*	40
2.2	3	**BN 90L**	**2**	2880	65	•	82.7	82.1	80.8	0.80	4.8	6.3	2.9	2.7	J	0.0040	*14*	31	**FD 05**	230	900	2200	0.0050	*20*	44	**FA 05**	230	2200	0.0050	*20.7*	46
3	4	**BN 100L**	**2**	2860	89	•	81.5	81.3	77.4	0.79	6.7	5.6	2.6	2.2	H	0.0074	*20*	44	**FD 15**	230	700	1600	0.0083	*26*	57	**FA 15**	230	1600	0.0083	*27*	60
4	5.5	**BN 100LB**	**2**	2870	118	•	83.1	83.0	77.8	0.80	8.7	5.8	2.7	2.5	H	0.0093	*23*	51	**FD 15**	354	450	900	0.0102	*29*	64	**FA 15**	354	1000	0.0102	*30*	66
4	5.5	**BN 112M**	**2**	2900	117	•	85.5	84.5	83.0	0.82	8.2	6.9	3.0	2.9	J	0.0135	*28*	62	**FD 06S**	354	—	950	0.0157	*39*	86	**FA 06S**	354	950	0.0157	*40*	88
5.5	7.5	**BN 132SA**	**2**	2890	161	•	84.7	84.5	81.2	0.84	11.2	5.9	2.6	2.2	G	0.0240	*35*	77	**FD 06**	443	—	600	0.0266	*48*	106	**FA 06**	443	600	0.0266	*49*	108
7.5	10	**BN 132SB**	**2**	2900	221	•	86.5	86.3	84.4	0.85	14.7	6.4	2.6	2.2	H	0.0344	*42*	93	**FD 06**	443	—	550	0.0365	*55*	121	**FA 06**	443	550	0.0365	*56*	123
9.2	12.5	**BN 132M**	**2**	2930	266	•	87.0	86.5	83.6	0.86	17.7	6.7	2.8	2.3	H	0.0422	*53*	117	**FD 56**	664	—	430	0.0449	*66*	146	**FA 06**	664	430	0.0449	*67*	148
11	15	**BN 160MR**	**2**	2920	319	•	87.6	87.0	86.0	0.88	20.6	6.9	2.9	2.5	H	0.0498	*65*	143													
15	20	**BN 160MB**	**2**	2930	434	•	89.6	89.4	88.0	0.86	28.1	7.1	2.6	2.3	H	0.0807	*84*	185													
18.5	25	**BN 160L**	**2**	2930	531	•	90.4	90.1	89.0	0.86	34	7.6	2.7	2.3	J	0.0997	*97*	214													
22	30	**BN 180M**	**2**	2930	637	•	89.9	89.7	89.5	0.88	40	7.8	2.6	2.4	J	0.116	*109*	240													
30	40	**BN 200LA**	**2**	2930	867	•	90.7	90.1	87.6	0.89	54	7.8	2.7	2.9	J	0.183	*140*	309													

○ = n.a. • = IE1

BN-M

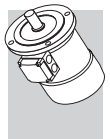

BN-M

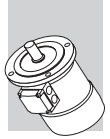

4P — 1500 rpm - S1 — 50 Hz

P_n kW	P_n HP			n rpm	T_n lb•in	IE1	η (100%) %	η (75%) %	η (50%) %	cosφ	In 400V A	I_s/I_n	T_s/T_n	T_a/T_n	KVA Code	J_m lb•ft²	IM B5 Kg	IM B5 lbs	d.c. brake FD Mod	T_b lb•in	Z_o 1/h NB	Z_o 1/h SB	J_m lb•ft²	IM B5 Kg	IM B5 lbs	a.c. brake FA Mod	T_b lb•in	Z_o 1/h	J_m lb•ft²	IM B5 Kg	IM B5 lbs
0.06	0.08	**BN 56A**	**4**	1340	3.8	○	46.8	44.2	41.3	0.65	0.28	2.6	2.3	2.0	H	0.0004	*3.1*	6.8													
0.09	0.12	**BN 56B**	**4**	1350	5.7	○	51.7	47.6	42.9	0.60	0.42	2.6	2.5	2.4	H	0.0004	*3.1*	6.8													
0.12	0.16	**BN 63A**	**4**	1350	7.5	○	59.8	56.2	47.0	0.62	0.47	2.6	1.9	1.8	F	0.0005	*3.5*	7.7	**FD 02**	15	10000	13000	0.0006	*5.2*	11	**FA 02**	15	13000	0.0006	*5.0*	11
0.18	0.25	**BN 63B**	**4**	1320	11.5	○	54.8	52.9	52.5	0.67	0.71	2.6	2.2	2.0	F	0.0005	*3.9*	8.6	**FD 02**	31	10000	13000	0.0007	*5.6*	12	**FA 02**	31	13000	0.0007	*5.4*	12
0.25	0.33	**BN 63C**	**4**	1340	15.8	○	65.3	65.0	57.9	0.69	0.80	2.7	2.1	1.9	E	0.0008	*5.1*	11	**FD 02**	31	7800	10000	0.0009	*6.8*	15	**FA 02**	31	10000	0.0009	*6.6*	15
0.25	0.33	**BN 71A**	**4**	1380	15.3	○	63.7	62.2	59.1	0.73	0.78	3.3	1.9	1.7	F	0.0014	*5.1*	11	**FD 03**	31	7700	11000	0.0016	*7.8*	17	**FA 03**	31	11000	0.0016	*7.5*	17
0.37	0.5	**BN 71B**	**4**	1370	23.0	○	66.8	66.7	63.0	0.76	1.05	3.7	2.0	1.9	F	0.0016	*5.9*	13	**FD 03**	44	6000	9400	0.0019	*8.6*	19	**FA 03**	44	9400	0.0019	*8.3*	18
0.55	0.75	**BN 71C**	**4**	1380	33.6	○	69.0	68.9	68.8	0.74	1.55	4.1	2.3	2.3	G	0.0022	*7.3*	16	**FD 53**	66	4300	8700	0.0024	*10.0*	22	**FA 03**	66	8700	0.0024	*9.7*	21
0.55	0.75	**BN 80A**	**4**	1390	33.6	○	72.0	71.3	69.7	0.77	1.43	4.1	2.3	2.0	F	0.0036	*8.2*	18	**FD 04**	89	4100	8000	0.0039	*12.1*	27	**FA 04**	89	8000	0.0039	*12.0*	26
0.75	1	**BN 80B**	**4**	1400	45	•	75.0	74.5	69.3	0.78	1.85	4.9	2.7	2.5	H	0.0047	*9.9*	22	**FD 04**	133	4100	7800	0.0052	*13.8*	30	**FA 04**	133	7800	0.0052	*13.7*	30
1.1	1.5	**BN 80C**	**4**	1400	66	•	75.5	76.2	70.4	0.78	2.7	5.1	2.8	2.5	H	0.0059	*11.3*	25	**FD 04**	133	2600	5300	0.0064	*15.2*	34	**FA 04**	133	5300	0.0064	*15.1*	33
1.1	1.5	**BN 90S**	**4**	1390	67	•	76.5	76.2	72.2	0.77	2.70	4.6	2.6	2.2	G	0.0050	*12.2*	27	**FD 14**	133	4800	8000	0.0055	*16.4*	36	**FA 14**	133	8000	0.0055	*16.3*	36
1.5	2	**BN 90LA**	**4**	1410	90	•	78.7	78.5	74.9	0.77	3.6	5.3	2.8	2.4	H	0.0066	*13.6*	30	**FD 05**	230	3400	6000	0.0076	*19.6*	43	**FA 05**	230	6000	0.0076	*20.3*	45
1.85	2.5	**BN 90LB**	**4**	1390	112	•	78.6	78.9	77.2	0.79	4.3	5.1	2.8	2.6	G	0.0071	*15.1*	33	**FD 05**	230	3200	5900	0.0081	*21.1*	47	**FA 05**	230	5900	0.0081	*21.8*	48
2.2	3	**BN 100LA**	**4**	1410	132	•	81.1	81.4	79.9	0.75	5.2	4.5	2.2	2.0	F	0.0095	*18*	40	**FD 15**	354	2600	4700	0.0104	*25*	55	**FA 15**	354	4700	0.0104	*25*	55
3	4	**BN 100LB**	**4**	1410	177	•	82.6	83.8	83.7	0.77	6.8	5.0	2.3	2.2	G	0.0128	*22*	49	**FD 15**	354	2400	4400	0.0138	*28*	62	**FA 15**	354	4400	0.0138	*29*	64
4	5.5	**BN 112M**	**4**	1430	239	•	84.4	84.2	81.6	0.81	8.4	5.6	2.7	2.5	G	0.0233	*30*	66	**FD 06S**	531	—	1400	0.0254	*40*	88	**FA 06S**	531	2100	0.0254	*42*	93
5.5	7.5	**BN 132S**	**4**	1440	319	•	84.7	84.8	82.5	0.81	11.6	5.5	2.3	2.2	G	0.0505	*44*	97	**FD 56**	664	—	1050	0.0529	*57*	126	**FA 06**	664	1200	0.0529	*58*	128
7.5	10	**BN 132MA**	**4**	1440	443	•	86.0	86.3	85.3	0.81	15.5	5.7	2.5	2.4	H	0.0641	*53*	117	**FD 06**	885	—	950	0.0664	*66*	146	**FA 07**	885	1000	0.0664	*71*	157
9.2	12.5	**BN 132MB**	**4**	1440	540	•	88.4	88.6	87.5	0.81	18.8	5.9	2.7	2.5	H	0.0757	*59*	130	**FD 07**	1328	—	900	0.0812	*75*	165	**FA 07**	1328	900	0.0812	*77*	170
11	15	**BN 160MR**	**4**	1440	646	•	87.6	87.8	86.0	0.81	22.4	6.0	2.7	2.5	G	0.0854	*70*	154	**FD 07**	1328	—	850	0.0906	*86*	190	**FA 07**	1328	850	0.0906	*88*	194
15	20	**BN 160L**	**4**	1460	867	•	88.7	88.5	88.4	0.81	30	6.0	2.3	2.1	G	0.154	*99*	218	**FD 08**	1770	—	750	0.172	*129*	284	**FA 08**	1770	750	0.168	*128*	282
18.5	25	**BN 180M**	**4**	1460	1071	•	89.3	89.5	89.2	0.81	37	6.2	2.6	2.5	H	0.187	*115*	254	**FD 08**	2213	—	700	0.205	*145*	320	**FA 08**	2213	700	0.202	*144*	317
22	30	**BN 180L**	**4**	1460	1275	•	89.9	90.0	90.0	0.80	44	6.4	2.5	2.5	G	0.297	*135*	298	**FD 09**	2655	—	400	0.344	*175*	386						
30	40	**BN 200L**	**4**	1460	1735	•	91.4	91.7	91.0	0.80	59	7.1	2.7	2.8	J	0.392	*157*	346	**FD 09**	3540	—	300	0.439	197	434						

○ = n.a. • = IE1

6P — 1000 rpm - S1 — 50 Hz

P_n kW	P_n HP		n rpm	T_n lb•in	IE1	η (100%) %	η (75%) %	η (50%) %	cosφ	In 400V A	I_s/I_n	T_s/T_n	T_a/T_n	KVA Code	J_m lb•ft²	IM B5 Kg	IM B5 lbs	d.c. brake FD Mod	T_b lb•in	Z_o 1/h NB	Z_o 1/h SB	J_m lb•ft²	IM B5 Kg	IM B5 lbs	a.c. brake FA Mod	T_b lb•in	Z_o 1/h	J_m lb•ft²	IM B5 Kg	IM B5 lbs
0.09	0.12	**BN 63A 6**	880	8.7	○	41.0	41.0	32.9	0.53	0.60	2.1	2.1	1.8	J	0.0008	*4.6*	10	**FD 02**	31	9000	14000	0.0015	*6.3*	14	**FA 02**	31	14000	0.0009	*6.1*	13
0.12	0.16	**BN 63B 6**	870	11.7	○	45.0	44.0	41.8	0.60	0.64	2.1	1.9	1.7	G	0.0009	*4.9*	11	**FD 02**	31	9000	14000	0.0016	*6.6*	15	**FA 02**	31	14000	0.0010	*6.4*	14
0.18	0.25	**BN 71A 6**	900	16.9	○	55.0	55.5	51.0	0.69	0.68	2.6	1.9	1.7	F	0.0020	*5.5*	12	**FD 03**	44	8100	13500	0.0019	*8.2*	18	**FA 03**	44	13500	0.0023	*7.9*	17
0.25	0.33	**BN 71B 6**	900	23.9	○	62.0	58.5	51.4	0.71	0.82	2.6	1.9	1.7	D	0.0026	*6.7*	15	**FD 03**	44	7800	13000	0.0022	*9.4*	21	**FA 03**	44	13000	0.0028	*9.1*	20
0.37	0.5	**BN 71C 6**	910	34.5	○	66.0	60.0	53.3	0.69	1.17	3.0	2.4	2.0	E	0.0031	*7.7*	17	**FD 53**	66	5100	9500	0.0025	*10.4*	23	**FA 03**	66	9500	0.0033	*10.1*	22
0.37	0.5	**BN 80A 6**	910	34.5	○	68.0	67.4	63.3	0.68	1.15	3.2	2.2	2.0	F	0.0050	*9.9*	22	**FD 04**	89	5200	8500	0.0033	*13.8*	30	**FA 04**	89	8500	0.0055	*13.7*	30
0.55	0.75	**BN 80B 6**	920	50	○	70.0	69.8	64.3	0.68	1.67	3.9	2.6	2.2	G	0.0059	*11.3*	25	**FD 04**	133	4800	7200	0.0036	*15.2*	34	**FA 04**	133	7200	0.0064	*15.1*	33
0.75	1	**BN 80C 6**	920	69	•	70.0	70.0	64.4	0.65	2.38	3.8	2.5	2.2	G	0.0066	*12.2*	27	**FD 04**	133	3400	6400	0.0038	*16.1*	35	**FA 04**	133	6400	0.0071	*16.0*	35
0.75	1	**BN 90S 6**	920	69	•	70.0	69.0	64.2	0.68	2.27	3.8	2.4	2.2	G	0.0062	*12.6*	28	**FD 14**	133	3400	6500	0.0040	*16.8*	37	**FA 14**	133	6500	0.0066	*16.7*	37
1.1	1.5	**BN 90L 6**	920	101	•	72.9	72.6	69.1	0.69	3.2	3.9	2.3	2.0	G	0.0078	*15*	33	**FD 05**	230	2700	5000	0.0050	*21*	46	**FA 05**	230	5000	0.0088	*22*	49
1.5	2	**BN 100LA 6**	940	135	•	75.2	74.2	70.3	0.72	4.0	4.1	2.1	2.0	G	0.0195	*22*	49	**FD 15**	354	1900	4100	0.0066	*28*	62	**FA 15**	354	4100	0.0204	*29*	64
1.85	2.5	**BN 100LB 6**	930	168	•	76.6	72.8	62.6	0.73	4.8	4.6	2.1	2.0	G	0.0225	*24*	53	**FD 15**	354	1700	3600	0.0071	*30*	66	**FA 15**	354	3600	0.0235	*31*	68
2.2	3	**BN 112M 6**	940	195	•	78.5	79.0	76.5	0.73	5.5	4.8	2.2	2.0	H	0.0399	*32*	71	**FD 06S**	531	—	2100	0.0100	*42*	93	**FA 06S**	531	2100	0.0420	*44*	97
3	4	**BN 132S 6**	940	266	•	79.7	77.0	75.1	0.76	7.1	5.1	1.9	1.8	G	0.0513	*36*	79	**FD 56**	664	—	1400	0.0116	*49*	108	**FA 06**	664	1400	0.0536	*50*	110
4	5.5	**BN 132MA 6**	950	354	•	81.4	81.5	79.5	0.77	9.2	5.5	2.0	1.8	H	0.0700	*45*	99	**FD 06**	885	—	1200	0.0138	*58*	128	**FA 07**	885	1200	0.0755	*63*	139
5.5	7.5	**BN 132MB 6**	945	496	•	83.1	80.9	79.1	0.78	12.2	6.1	2.1	1.9	H	0.0909	*56*	123	**FD 07**	1328	—	1050	0.0171	*72*	159	**FA 07**	1328	1050	0.0963	*74*	163
7.5	10	**BN 160M 6**	955	664	•	85.0	85.0	84.8	0.81	15.7	5.9	2.2	2.0	H	0.176	*83*	183	**FD 08**	1505	—	900	0.0266	*112*	247	**FA 08**	1505	900	0.193	*113*	249
11	15	**BN 160L 6**	960	965	•	86.4	86.5	85.9	0.81	22.7	6.6	2.5	2.3	H	0.230	*103*	227	**FD 08**	1770	—	800	0.0316	*133*	293	**FA 08**	1770	800	0.248	*133*	293
15	20	**BN 180L 6**	970	1310	•	87.7	88.0	87.3	0.82	30	6.2	2.0	2.4	H	0.368	*130*	287	**FD 09**	2655	—	600	0.0403	*170*	375						
18.5	25	**BN 200LA 6**	960	1629	•	88.6	88.0	87.3	0.81	37	5.9	2.0	2.3	G	0.403	*145*	320	**FD 09**	3540	—	450	0.0439	*185*	408						

○ = n.a. • = IE1

BN-M

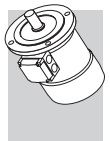

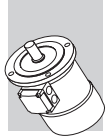

2P — 3000 rpm - S1 — 50 Hz

P_n kW	P_n HP		n rpm	T_n lb•in	IE1	η (100%) %	η (75%) %	η (50%) %	cosφ	In 400V A	I_s/I_n	T_s/T_n	T_a/T_n	KVA Code	J_m lb•ft²	IM B5 Kg	IM B5 lbs	d.c. brake FD Mod	T_b lb•in	Z_o 1/h NB	Z_o 1/h SB	J_m lb•ft²	IM B5 Kg	IM B5 lbs	a.c. brake FA Mod	T_b lb•in	Z_o 1/h	J_m lb•ft²	IM B5 Kg	IM B5 lbs
0.18	0.25	**M 05A 2**	2730	5.6	○	59.9	56.9	51.9	0.77	0.56	3.0	2.1	2.0	F	0.0005	*3.2*	7.1	**FD 02**	15	3900	4800	0.0006	*4.9*	11	**FA 02**	15	4800	0.0006	*4.7*	10
0.25	0.33	**M 05B 2**	2740	7.7	○	66.0	64.8	64.8	0.76	0.72	3.3	2.3	2.3	D	0.0005	*3.6*	7.9	**FD 02**	15	3900	4800	0.0007	*5.3*	12	**FA 02**	15	4800	0.0007	*5.1*	11
0.37	0.5	**M 05C 2**	2800	11.2	○	69.1	66.8	66.8	0.78	0.99	3.9	2.6	2.6	A	0.0008	*4.8*	11	**FD 02**	31	3600	4500	0.0009	*6.5*	14	**FA 02**	31	4500	0.0009	*6.3*	14
0.55	0.75	**M 1SD 2**	2820	16.5	○	76.0	75.8	74.8	0.76	1.37	5.0	2.9	2.8	A	0.0010	*5.8*	13	**FD 03**	44	2900	4200	0.0013	*8.5*	19	**FA 03**	44	4200	0.0013	*8.2*	18
0.75	1	**M 1LA 2**	2810	23.0	○	76.6	76.2	76.2	0.76	1.86	5.1	3.1	2.8	J	0.0012	*6.9*	15	**FD 03**	44	1900	3300	0.0014	*9.6*	21	**FA 03**	44	3300	0.0014	*9.3*	21
1.1	1.5	**M 2SA 2**	2800	33.6	•	76.4	76.2	75.0	0.81	2.57	4.8	2.8	2.4	H	0.0021	*8.8*	19	**FD 04**	89	1500	3000	0.0025	*11.9*	26	**FA 04**	89	3000	0.0025	*12.6*	28
1.5	2	**M 2SB 2**	2800	45	•	79.1	79.5	77.2	0.81	3.4	4.9	2.7	2.4	F	0.0027	*10.6*	23	**FD 04**	133	1300	2600	0.0031	*9.9*	22	**FA 04**	133	2600	0.0031	*14.4*	32
2.2	3	**M 3SA 2**	2880	65	•	82.7	82.1	81.0	0.80	4.8	6.3	2.9	2.7	K	0.0057	*15.5*	34	**FD 15**	230	1100	2400	0.0066	*22*	49	**FA 15**	230	2400	0.0066	*23*	51
3	4	**M 3LA 2**	2860	89	•	81.5	81.3	77.4	0.79	6.7	5.6	2.6	2.2	J	0.0074	*18.7*	41	**FD 15**	230	700	1600	0.0083	*25*	55	**FA 15**	230	1600	0.0083	*26*	57
4	5.5	**M 3LB 2**	2870	118	•	83.1	83.0	77.8	0.80	8.7	5.8	2.7	2.5	A	0.0093	*22*	49	**FD 15**	354	450	900	0.0102	*28*	62	**FA 15**	354	900	0.0102	*29*	64
5.5	7.5	**M 4SA 2**	2890	161	•	84.7	84.5	81.2	0.84	11.2	5.9	2.6	2.2	H	0.0240	*33*	73	**FD 06**	443	—	600	0.0266	*46*	101	**FA 06**	443	600	0.0266	*47*	104
7.5	10	**M 4SB 2**	2900	221	•	86.5	86.3	84.4	0.85	14.7	6.4	2.6	2.2	J	0.0344	*40*	88	**FD 06**	443	—	550	0.0365	*53*	117	**FA 06**	443	550	0.0365	*54*	119
9.2	12.5	**M 4LA 2**	2930	266	•	87.0	86.5	83.6	0.86	17.7	6.7	2.8	2.3	J	0.0422	*51*	112	**FD 56**	664	—	430	0.0449	*64*	141	**FA 06**	664	430	0.0449	*65*	143
11	15	**M 4LC 2**	2920	319	•	87.6	87.0	86.0	0.88	20.6	6.9	2.9	2.5	J	0.0498	*60*	132													
15	20	**M 5SB 2**	2930	434	•	89.6	89.4	88.0	0.86	28.1	7.1	2.6	2.3	J	0.0807	*70*	154													
18.5	25	**M 5SC 2**	2930	531	•	90.4	90.1	89.0	0.86	34	7.6	2.7	2.3	K	0.0997	*83*	183													
22	30	**M 5LA 2**	2930	637	•	89.9	89.7	89.5	0.88	40	7.8	2.6	2.4	K	0.116	*95*	209													

○ = n.a. • = IE1

4P — 1500 rpm - S1 — 50 Hz

P_n kW	P_n HP			n rpm	T_n lb•in	IE1	η (100%) %	η (75%) %	η (50%) %	cosφ	In 400V A	I_s/I_n	T_s/T_n	T_a/T_n	KVA Code	J_m lb•ft²	IM B5 Kg	IM B5 lbs	d.c. brake FD Mod	T_b lb•in	Z_o 1/h NB	Z_o 1/h SB	J_m lb•ft²	IM B5 Kg	IM B5 lbs	a.c. brake FA Mod	T_b lb•in	Z_o 1/h	J_m lb•ft²	IM B5 Kg	IM B5 lbs
0.09	0.12	**M 0B**	**4**	1350	5.7	○	51.7	47.6	42.9	0.60	0.42	2.6	2.5	2.4	H	0.0004	*2.9*	6.4													
0.12	0.16	**M 05A**	**4**	1350	7.5	○	59.8	56.2	47.0	0.62	0.47	2.6	1.9	1.8	E	0.0005	*3.2*	7.1	**FD 02**	15	10000	13000	0.0006	*4.9*	11	**FA 02**	15	13000	0.0006	*4.7*	10
0.18	0.25	**M 05B**	**4**	1320	11.5	○	54.8	52.9	52.5	0.67	0.71	2.6	2.2	2.0	A	0.0005	*3.6*	7.9	**FD 02**	31	10000	13000	0.0007	*5.3*	12	**FA 02**	31	13000	0.0007	*5.1*	11
0.25	0.33	**M 05C**	**4**	1340	15.8	○	65.3	65.0	57.9	0.69	0.80	2.7	2.1	1.9	E	0.0008	*4.8*	11	**FD 02**	31	7800	10000	0.0009	*6.5*	14	**FA 02**	31	10000	0.0009	*6.3*	14
0.37	0.5	**M 1SD**	**4**	1370	23.0	○	66.8	66.7	63.0	0.76	1.05	3.7	2.0	1.9	D	0.0016	*5.5*	12	**FD 03**	44	6000	9400	0.0019	*8.2*	18	**FA 03**	44	9400	0.0019	*7.9*	17
0.55	0.75	**M 1LA**	**4**	1380	33.6	○	69.0	68.9	68.8	0.74	1.55	4.1	2.3	2.3	G	0.0022	*6.9*	15	**FD 53**	66	4300	8700	0.0024	*9.6*	21	**FA 03**	66	8700	0.0024	*9.3*	21
0.75	1	**M 2SA**	**4**	1400	45	•	75.0	74.5	69.3	0.78	1.85	4.9	2.7	2.5	A	0.0047	*9.2*	20	**FD 04**	133	4100	7800	0.0052	*13.1*	29	**FA 04**	133	7800	0.0052	*13.0*	29
1.1	1.5	**M 2SB**	**4**	1400	66	•	76.4	76.2	70.4	0.78	2.66	5.1	2.8	2.5	G	0.0059	*10.6*	23	**FD 04**	133	2600	5300	0.0064	*14.5*	32	**FA 04**	133	5300	0.0064	*14.4*	32
1.5	2	**M 3SA**	**4**	1410	90	•	79.6	80.5	79.3	0.77	3.5	4.6	2.1	2.1	D	0.0081	*15.5*	34	**FD 15**	230	2800	4900	0.0090	*22*	49	**FA 15**	230	4900	0.0090	*23*	51
2.2	3	**M 3LA**	**4**	1410	132	•	81.1	81.4	79.9	0.75	5.2	4.5	2.2	2.0	A	0.0095	*17*	37	**FD 15**	354	2600	4700	0.0104	*24*	53	**FA 15**	354	4700	0.0104	*24*	53
3	4	**M 3LB**	**4**	1410	177	•	82.6	83.8	83.7	0.77	6.8	5.0	2.3	2.2	G	0.0128	*21*	46	**FD 15**	354	2400	4400	0.0138	*27*	60	**FA 15**	354	4400	0.0138	*28*	62
4	5.5	**M 3LC**	**4**	1400	239	○	82.7	83.1	80.5	0.78	9.0	4.7	2.3	2.2	F	0.0145	*23*	51	**FD 55**	487	—	1300	0.0154	*29*	64	**FA 15**	354	1300	0.0154	*30*	66
5.5	7.5	**M 4SA**	**4**	1440	319	•	84.7	84.8	82.5	0.81	11.6	5.5	2.3	2.2	A	0.0505	*42*	93	**FD 56**	664	—	1050	0.0529	*55*	121	**FA 06**	664	1050	0.0529	*56*	123
7.5	10	**M 4LA**	**4**	1440	443	•	86.0	86.3	85.3	0.81	15.5	5.7	2.5	2.4	G	0.0641	*51*	112	**FD 06**	885	—	950	0.0664	*64*	141	**FA 07**	885	950	0.0664	*65*	143
9.2	12.5	**M 4LB**	**4**	1440	540	•	88.4	88.6	87.5	0.81	18.8	5.9	2.7	2.5	G	0.0757	*57*	126	**FD 07**	1328	—	900	0.0812	*73*	161	**FA 07**	1328	900	0.0812	*75*	165
11	15	**M 4LC**	**4**	1440	646	•	87.6	87.8	86.0	0.81	22.4	6.0	2.7	2.5	G	0.0854	*65*	143	**FD 07**	1328	—	850	0.0906	*81*	179	**FA 07**	1328	850	0.0906	*83*	183
15	20	**M 5SB**	**4**	1460	867	•	88.7	88.5	88.4	0.81	30.1	6.0	2.3	2.1	G	0.154	*85*	187	**FD 08**	1770	—	750	0.172	*115*	254	**FA 08**	1770	750	0.168	*114*	251
18.5	25	**M 5LA**	**4**	1460	1071	•	89.3	89.5	89.2	0.81	37	6.2	2.6	2.5	H	0.187	*101*	223	**FD 08**	2213	—	700	0.205	*131*	289	**FA 08**	2213	700	0.202	*130*	287

○ = n.a. • = IE1

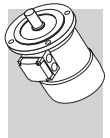

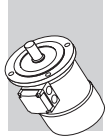

6P — 1000 rpm - S1 — 50 Hz

P_n kW	P_n HP		n rpm	T_n lb•in	IE1	η (100%) %	η (75%) %	η (50%) %	cosφ	In 400V A	I_s/I_n	T_s/T_n	T_a/T_n	KVA Code	J_m lb•ft²	IM B5 Kg	IM B5 lbs	d.c. brake FD Mod	T_b lb•in	Z_o 1/h NB	Z_o 1/h SB	J_m lb•ft²	IM B5 Kg	IM B5 lbs	a.c. brake FA Mod	T_b lb•in	Z_o 1/h	J_m lb•ft²	IM B5 Kg	IM B5 lbs
0.09	0.12	**M 05A 6**	880	8.7	○	41.0	41.0	32.9	0.53	0.60	2.1	2.1	1.8	J	0.0008	*4.3*	9.5	**FD 02**	31	9000	14000	0.0009	*6.0*	13	**FA 02**	31	14000	0.0009	*5.8*	13
0.12	0.16	**M 05B 6**	870	11.7	○	45.0	44.0	41.8	0.60	0.64	2.1	1.9	1.7	F	0.0009	*4.6*	10	**FD 02**	31	9000	14000	0.0010	*6.3*	14	**FA 02**	31	14000	0.0010	*6.1*	13
0.18	0.25	**M 1SC 6**	900	16.9	○	55.0	55.5	51.0	0.69	0.68	2.6	1.9	1.7	A	0.0020	*5.1*	11	**FD 03**	44	8100	13500	0.0023	*7.8*	17	**FA 03**	44	13500	0.0023	*7.5*	17
0.25	0.33	**M 1SD 6**	900	23.9	○	62.0	58.5	51.4	0.71	0.82	2.6	1.9	1.7	D	0.0026	*6.3*	14	**FD 03**	44	7800	13000	0.0028	*9.0*	20	**FA 03**	44	13000	0.0028	*8.7*	19
0.37	0.5	**M 1LA 6**	910	34.5	○	66.0	60.0	53.3	0.69	1.17	3.0	2.4	2.0	B	0.0031	*7.3*	16	**FD 53**	66	5100	9500	0.0033	*10.0*	22	**FA 03**	66	9500	0.0033	*9.7*	21
0.55	0.75	**M 2SA 6**	920	50	○	70.0	69.8	64.3	0.68	1.67	3.9	2.6	2.2	G	0.0059	*10.6*	23	**FD 04**	133	4800	7200	0.0064	*14.5*	32	**FA 04**	133	7200	0.0064	*14.4*	32
0.75	1	**M 2SB 6**	920	69	•	70.0	70.0	64.4	0.65	2.38	3.8	2.5	2.2	A	0.0066	*11.5*	25	**FD 04**	133	3400	6400	0.0071	*15.4*	34	**FA 04**	133	6400	0.0071	*15.3*	34
1.1	1.5	**M 3SA 6**	920	101	•	75.0	74.0	72.0	0.72	2.9	4.3	2.0	1.8	G	0.0078	*17*	37	**FD 15**	230	2700	5000	0.0088	*23*	51	**FA 15**	230	5000	0.0088	*24*	53
1.5	2	**M 3LA 6**	940	135	•	75.2	74.2	70.3	0.72	4.0	4.1	2.1	2.0	D	0.0195	*21*	46	**FD 15**	354	1900	4100	0.0204	*27*	60	**FA 15**	354	4100	0.0204	*28*	62
1.85	2.5	**M 3LB 6**	930	168	•	76.6	72.8	62.6	0.73	4.8	4.6	2.1	2.0	A	0.0225	*23*	51	**FD 15**	354	1700	3600	0.0235	*29*	64	**FA 15**	354	3600	0.0235	*30*	66
2.2	3	**M 3LC 6**	930	204	•	77.7	76.8	72.4	0.71	5.8	4.7	2.3	2.1	G	0.0225	*23*	51	**FD 55**	487	—	1900	0.0235	*29*	64	**FA 15**	354	1900	0.0235	*30*	66
3	4	**M 4SA 6**	940	266	•	79.7	77.0	75.1	0.76	7.1	5.1	1.9	1.8	G	0.0513	*34*	75	**FD 56**	664	—	1400	0.0536	*47*	104	**FA 06**	664	1400	0.0536	*48*	106
4	5.5	**M 4LA 6**	950	354	•	81.4	81.5	79.5	0.77	9.2	5.5	2.0	1.8	A	0.0700	*43*	95	**FD 06**	885	—	1200	0.0724	*56*	123	**FA 07**	885	1200	0.0724	*57*	126
5.5	7.5	**M 4LB 6**	945	496	•	83.1	80.9	79.1	0.78	12.2	6.1	2.1	1.9	H	0.0909	*54*	119	**FD 07**	1328	—	1050	0.0963	*70*	154	**FA 07**	1328	1050	0.0963	*72*	159
7.5	10	**M 5SA 6**	955	664	•	85.0	85.0	84.8	0.81	15.7	5.9	2.2	2.0	H	0.176	*69*	152	**FD 08**	1505	—	900	0.193	*98*	216	**FA 08**	1505	900	0.190	*98*	216
11	15	**M 5SB 6**	960	965	•	86.4	86.5	85.9	0.81	22.7	6.6	2.5	2.3	H	0.230	*89*	196	**FD 08**	1770	—	800	0.248	*119*	262	**FA 08**	1770	800	0.244	*118*	260

○ = n.a. • = IE1

BN - IM B5

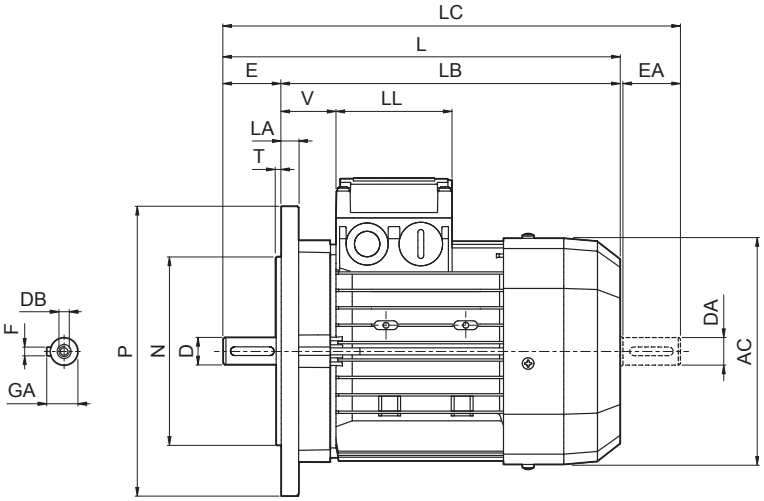

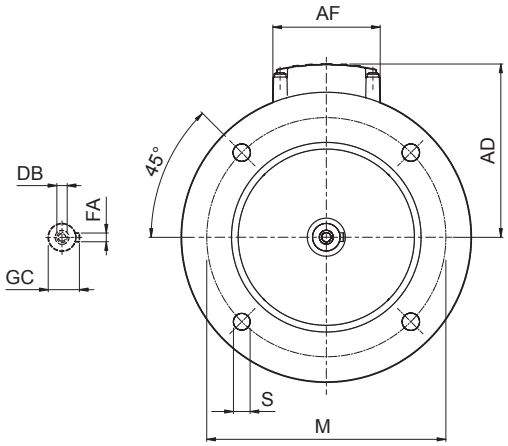

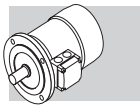

Dimensions are in [mm]

	Shaft					Flange						Motor							
	D DA	E EA	DB	GA GC	F FA	M	N	P	S	T	LA	AC	L	LB	LC	AD	AF	LL	V
BN 56	9	20	M3	10.2	3	100	80	120	7	3	8	110	185	165	207	91	74	80	34
BN 63	11	23	M4	12.5	4	115	95	140	9.5		10	121	207	184	232	95			26
BN 71	14	30	M5	16	5	130	110	160		3.5		138	249	219	281	108			37
BN 80	19	40	M6	21.5	6	165	130	200	11.5		11.5	156	274	234	315	119			38
BN 90	24	50	M8	27	8							176	326	276	378	133	98	98	44
BN 100	28	60	M10	31		215	180	250	14	4	14	195	367	307	429	142			50
BN 112											15	219	385	325	448	157			52
BN 132	38	80	M12	41	10	265	230	300			20	258	493	413	576	193	118	118	58
BN 160 MR	42 38(1)	110 80(1)	M16 M12(1)	45 41(1)	12 10(1)	300	250	350	18.5	5	15		562	452	645				218
BN 160 M												310	596	486	680	245	187	187	51
BN 160 L																			
BN 180 M	48 38(1)	110 110(1)		51.5 41(1)	14 10(1)							310	640	530	724				
BN 180 L	48 42(1)		M16 M16(1)	51.5 45(1)	14 12(1)						18	348	708	598	823	261			52
BN 200 L	55 42(1)		M20 M16(1)	59 45(1)	16 12(1)	350	300	400					722	612	837				66

NOTE:
1) These values refer to the rear shaft end.

BN - IM B5

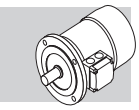

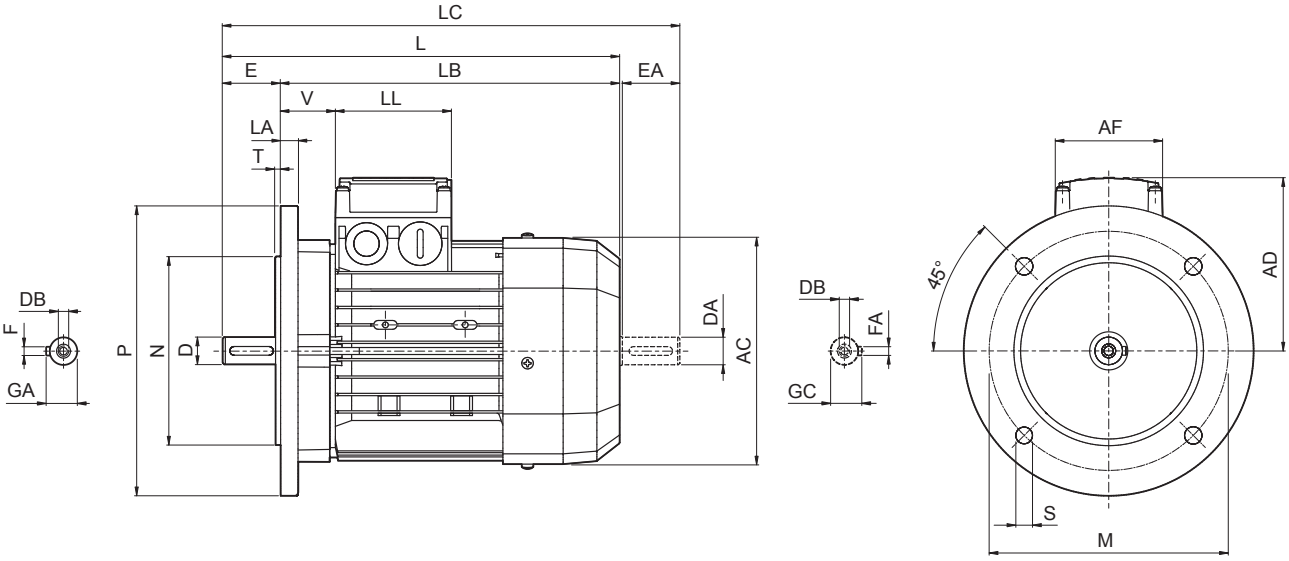

Dimensions are in Inch except when shown in *italic [mm]*

	Shaft					Flange						Motor							
	D DA	**E EA**	**DB**	**GA GC**	**F FA**	**M**	**N**	**P**	**S**	**T**	**LA**	**AC**	**L**	**LB**	**LC**	**AD**	**AF**	**LL**	**V**
BN 56	0.354	0.787	*M3*	0.402	0.118	3.937	3.150	4.724	0.276	0.118	0.315	4.331	7.283	6.496	8.150	3.583	2.913	3.150	1.339
BN 63	0.433	0.906	*M4*	0.492	0.157	4.528	3.740	5.512	0.374		0.394	4.764	8.150	7.244	9.134	3.740			1.024
BN 71	0.551	1.181	*M5*	0.630	0.197	5.118	4.331	6.299		0.138		5.433	9.803	8.622	11.063	4.252			1.457
BN 80	0.748	1.575	*M6*	0.846	0.236	6.496	5.118	7.874	0.453		0.453	6.142	10.787	9.213	12.402	4.685			1.496
BN 90	0.945	1.969	*M8*	1.063	0.315							6.929	12.835	10.866	14.882	5.236	3.858	3.858	1.732
BN 100	1.102	2.362	*M10*	1.220		8.465	7.087	9.843	0.551	0.157	0.551	7.677	14.449	12.087	16.890	5.591			1.969
BN 112											0.591	8.622	15.157	12.795	17.638	6.181			2.047
BN 132	1.496	3.150	*M12*	1.614	0.394	10.433	9.055	11.811			0.787	10.157	19.409	16.260	22.677	7.598	4.646	4.646	2.283
BN 160 MR	1.654 1.496(1)	4.331 3.150(1)	*M16* *M12(1)*	1.772 1.614(1)	0.472 0.395(1)	11.811	9.843	13.780	0.728	0.197	0.591		22.126	17.795	25.394				8.583
BN 160 M												12.205	23.465	19.134	26.772	9.646	7.362	7.362	2.008
BN 160 L																			
BN 180 M	1.890 1.496(1)	4.331 4.331(1)	*M16* *M12(1)*	2.028 1.614(1)	0.551 0.394(1)							12.205	25.197	20.866	28.504				
BN 180 L	1.890 1.654(1)		*M16* *M16(1)*	2.018 1.772(1)	0.551 0.472(1)						0.709	13.701	27.874	23.543	32.402	10.276			2.047
BN 200 L	2.165 1.654(1)		*M20* *M16(1)*	2.323 1.772(1)	0.630 0.472(1)	13.780	11.811	15.748					28.425	24.094	32.953				2.598

NOTE:
1) These values refer to the rear shaft end.

BN_FD ; IM B5

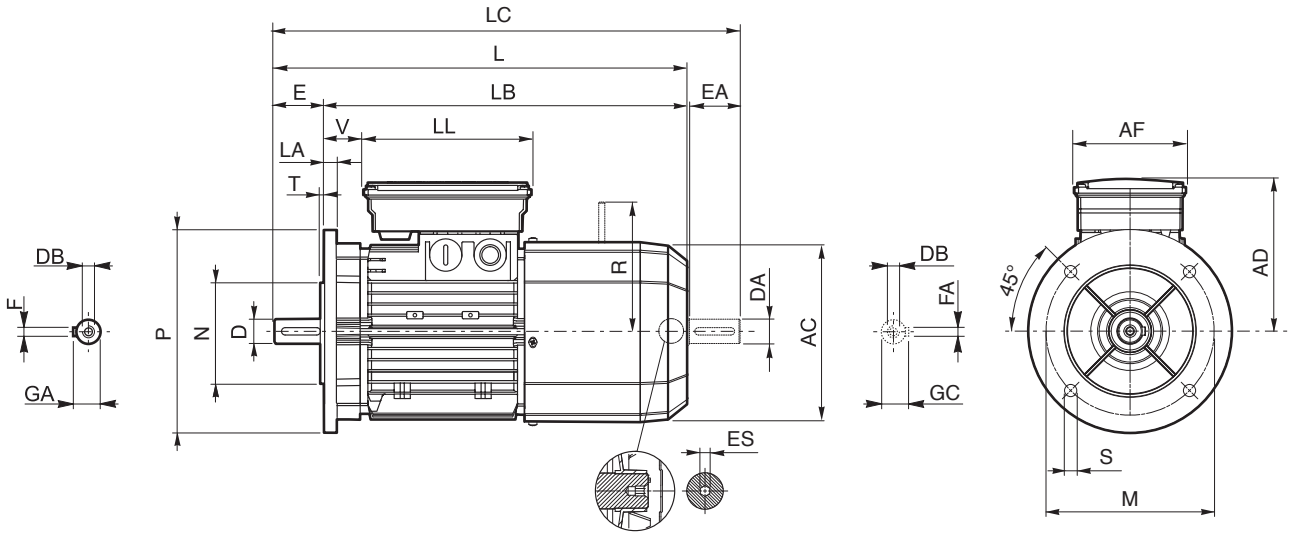

Dimensions are in [mm]

	Shaft					Flange						Motor									
	D DA	E EA	DB	GA GC	F FA	M	N	P	S	T	LA	AC	L	LB	LC	AD	AF	LL	V	R	ES
BN 63	11	23	M4	12.5	4	115	95	140	9.5	3	10	121	272	249	297	122	98	133	14	96	5
BN 71	14	30	M5	16	5	130	110	160	9.5	3.5		138	310	280	342	135			25	103	
BN 80	19	40	M6	21.5	6	165	130	200	11.5		11.5	156	346	306	388	146			41	129	
BN 90 S	24	50	M8	27	8							176	409	359	461	149	110	165	39		6
BN 90 L																146				160	
BN 100	28	60	M10	31		215	180	250	14	4	14	195	458	398	521	158		165	62		
BN 112											15	219	484	424	547	173		165	73	199	
BN 132	38	80	M12	41	10	265	230	300			20	258	603	523	686	210	140	188	46	204(2)	
BN 160 MR	42 38(1)	110 80(1)	M16 M12(1)	45 41(1)	12 10(1)	300	250	350	18.5	5	15		672	562	755				161	226	
BN 160 M												310	736	626	820	245	187	187	51	266	—
BN 160 L	42 38(1)																				
BN 180 M	48 38(1)			51.5 41(1)	14 10(1)								780	670	864						
BN 180 L	48 42(1)	110 110(1)	M16 M16(1)	51.5 45(1)	14 12(1)						18	348	866	756	981	261			52	305	
BN 200 L	55 42(1)		M20 M16(1)	59 45(1)	16 12(1)	350	300	400	18.5				878	768	993				64		

NOTE:
1) These values refer to the rear shaft end.
2) For FD07 brake value R=226.

ES hexagon is not supplied with PS option.

BN-M

BN_FD ; IM B5

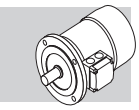

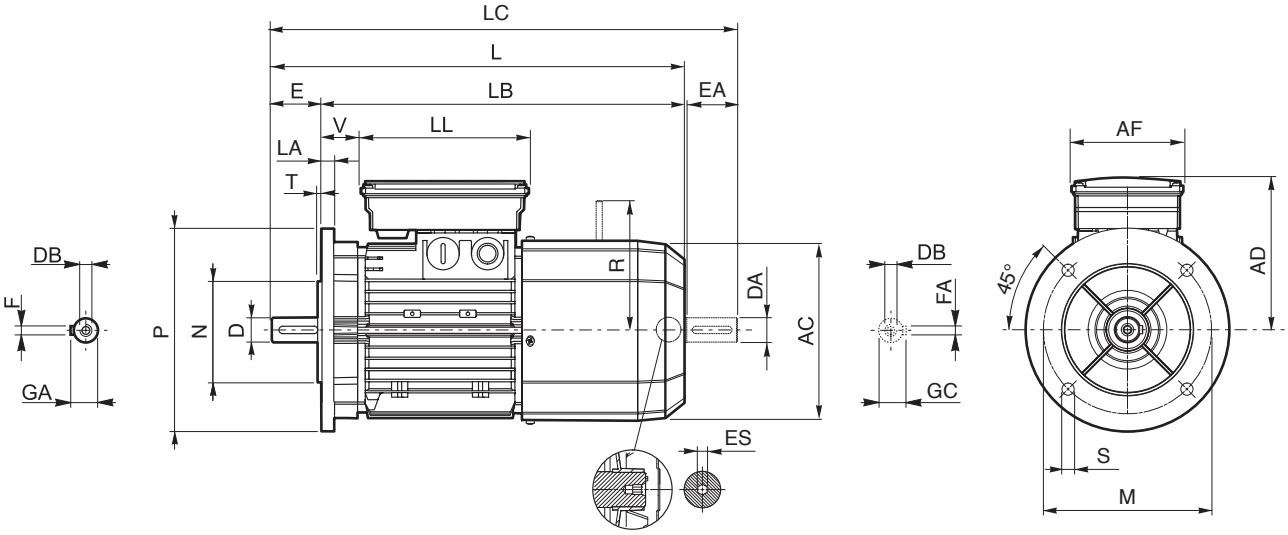

Dimensions are in Inch except when shown in *italic [mm]*

	Shaft					Flange						Motor									
	D DA	**E EA**	**DB**	**GA GC**	**F FA**	**M**	**N**	**P**	**S**	**T**	**LA**	**AC**	**L**	**LB**	**LC**	**AD**	**AF**	**LL**	**V**	**R**	**ES**
BN 63	0.433	0.906	*M4*	0.492	0.157	4.528	3.740	5.512	0.374	0.118	0.394	4.764	10.709	9.803	11.693	4.803	3.858	5.236	0.551	3.780	0.197
BN 71	0.551	1.181	*M5*	0.630	0.197	5.118	4.331	6.299	0.374	0.138		5.433	12.205	11.024	13.465	5.315			0.984	4.055	
BN 80	0.748	1.575	*M6*	0.846	0.236	6.496	5.118	7.874	0.453		0.453	6.142	13.622	12.047	15.276	5.748			1.614	5.079	
BN 90 S	0.945	1.969	*M8*	1.063	0.315							6.929	16.102	14.134	18.150	5.866	4.331	6.496	1.535		0.236
BN 90 L																5.748				6.299	
BN 100	1.102	2.362	*M10*	1.220		8.465	7.087	9.843	0.551	0.157	0.551	7.677	18.031	15.669	20.512	6.220		6.496	2.441		
BN 112											0.591	8.622	19.055	16.693	21.535	6.811		6.496	2.874	7.835	
BN 132	1.496	3.150	*M12*	1.614	0.394	10.433	9.055	11.811			0.787	10.157	23.740	20.591	27.008	8.268	5.512	7.402	1.811	8.031(2)	
BN 160 MR	1.654 1.496(1)	4.331 3.150(1)	*M16* *M12(1)*	1.772 1.614(1)	0.472 0.394(1)	11.811	9.843	13.780	0.728	0.197	0.591		26.457	22.126	29.724				6.339	8.898	
BN 160 M												12.205	28.976	24.646	32.283	9.646	7.362	7.362	2.008	10.472	—
BN 160 L	1.654 1.496(1)	4.331 3.150(1)	*M16* *M12(1)*	1.772 1.614(1)	0.472 0.394(1)																
BN 180 M	1.890 1.496(1)			2.028 1.614(1)	0.551 0.394(1)								30.709	26.378	34.016						
BN 180 L	1.890 1.654(1)	4.331	*M16* *M16(1)*	2.028 1.772(1)	0.551 0.472(1)						0.709	13.701	34.094	29.764	38.622	10.276			2.047	12.008	
BN 200 L	2.165 1.654(1)	4.331(1)	*M20* *M16(1)*	2.323 1.772(1)	0.630 0.472(1)	13.780	11.811	15.748	0.728				34.567	30.236	39.094				2.520		

NOTE:
1) These values refer to the rear shaft end.
2) For FD07 brake value R=8.898

ES hexagon is not supplied with PS option.

BN_FA - IM B5

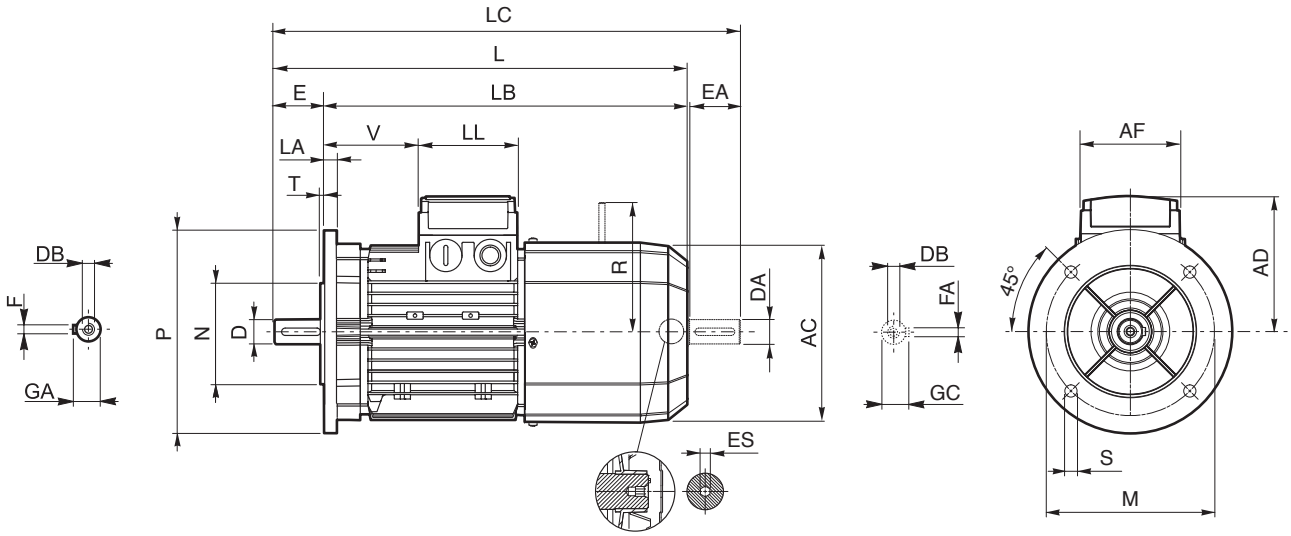

Dimensions are in [mm]

	Shaft					Flange						Motor									
	D DA	**E EA**	**DB**	**GA GC**	**F FA**	**M**	**N**	**P**	**S**	**T**	**LA**	**AC**	**L**	**LB**	**LC**	**AD**	**AF**	**LL**	**V**	**R**	**ES**
BN 63	11	23	M4	12.5	4	115	95	140	9.5	3	10	121	272	249	297	95	74	80	26	116	5
BN 71	14	30	M5	16	5	130	110	160		3.5		138	310	280	342	108			68	124	
BN 80	19	40	M6	21.5	6	165	130	200	11.5		11.5	156	346	306	388	119			83	134	
BN 90	24	50	M8	27	8							176	409	359	461	133	98	98	95	160	6
BN 100	28	60	M10	31		215	180	250	14	4	14	195	458	398	521	142			119		
BN 112											15	219	484	424	547	157			128	198	
BN 132	38	80	M12	41	10	265	230	300			20	258	603	523	686	210	140	188	46	200[2]	
BN 160 MR	42 38[1]	110 80[1]	M16 M12[1]	45 41[1]	12 10[1]	300	250	350	18.5	5	15		672	562	755	193	118	118	218	217	
BN 160 M												310	736	626	820	245	187	187	51	247	—
BN 160 L																					
BN 180 M	48 38[1]			51.5 41[1]	14 10[1]								780	670	864						

NOTE:
1) These values refer to the rear shaft end.
2) For FA07 brake value R=217.

Dimensions AD, AF, LL and V, relevant to terminal box of motors BN…FA featuring the separate brake supply (option SA), are coincident with corresponding dimensions of same-size BN…FD motors

ES hexagon is not supplied with PS option.

BN_FA - IM B5

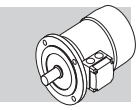

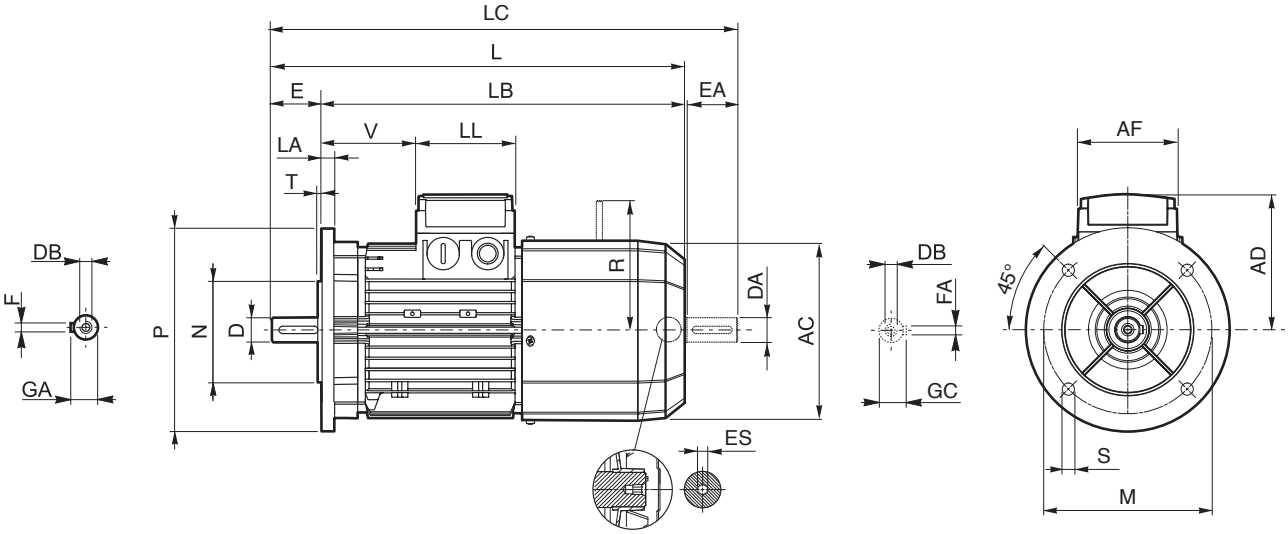

Dimensions are in Inch except when shown in *italic [mm]*

	Shaft					Flange						Motor									
	D DA	**E EA**	**DB**	**GA GC**	**F FA**	**M**	**N**	**P**	**S**	**T**	**LA**	**AC**	**L**	**LB**	**LC**	**AD**	**AF**	**LL**	**V**	**R**	**ES**
BN 63	0.433	0.906	*M4*	0.492	0.157	4.528	3.740	5.512	0.374	0.118	0.394	4.764	10.709	9.803	11.693	3.740	2.913	3.150	1.024	4.567	0.197
BN 71	0.551	1.181	*M5*	0.630	0.197	5.118	4.331	6.299		0.138		5.433	12.205	11.024	13.465	4.252			2.677	4.882	
BN 80	0.748	1.575	*M6*	0.846	0.236	6.496	5.118	7.874	0.453		0.453	6.142	13.622	12.047	15.276	4.685			3.268	5.276	
BN 90	0.945	1.969	*M8*	1.063	0.315							6.929	16.102	14.134	18.150	5.236	3.858	3.858	3.740	6.299	0.236
BN 100	1.102	2.362	*M10*	1.220		8.465	7.087	9.843	0.551	0.157	0.551	7.677	18.031	15.669	20.512	5.591			4.685		
BN 112											0.591	8.622	19.055	16.693	21.535	6.181			5.039	7.795	
BN 132	1.496	3.150	*M12*	1.614	0.394	10.433	9.055	11.811			0.787	10.157	23.740	20.591	27.008	8.268	5.512	7.402	1.811	7.874(2)	
BN 160 MR	1.654 1.496(1)	4.331 3.150(1)	*M16 M12(1)*	1.772 1.614(1)	0.472 0.394(1)	11.811	9.843	13.780	0.728	0.197	0.591		26.457	22.126	29.724	7.598	4.646	4.646	8.583	8.543	
BN 160 M												12.205	28.976	24.646	32.283	9.646	7.362	7.362	2.008	9.724	—
BN 160 L																					
BN 180 M				2.028 1.614(1)	0.551 0.394(1)								30.709	26.378	34.016						

NOTE:
1) These values refer to the rear shaft end.
2) For FA07 brake value R=8.543

Dimensions AD, AF, LL and V, relevant to terminal box of motors BN…FA featuring the separate brake supply (option SA), are coincident with corresponding dimensions of same-size BN…FD motors

ES hexagon is not supplied with PS option.

M

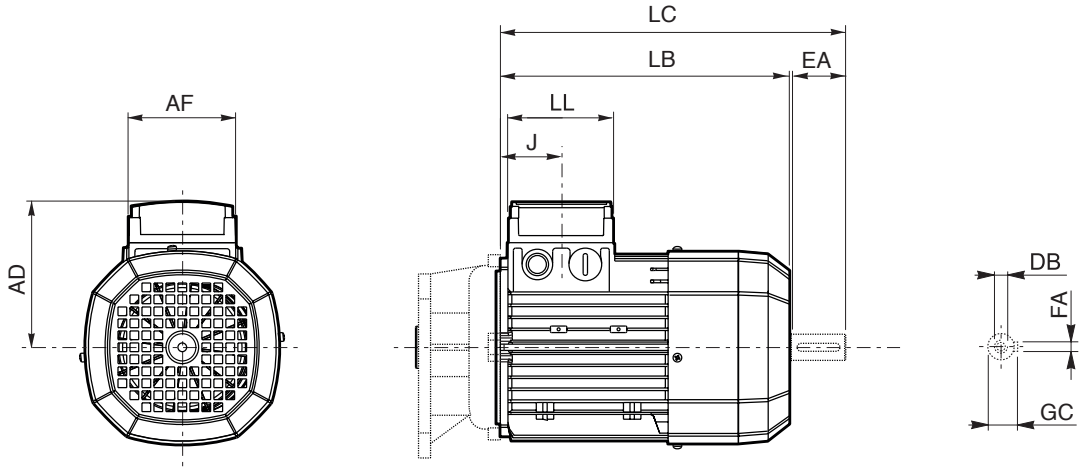

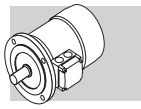

Dimensions are in [mm]

	Rear shaft end					Motor						
	DA	**EA**	**DB**	**FA**	**GC**	**AC**	**LB**	**LC**	**AF**	**LL**	**J**	**AD**
M 0	9	20	M3	3	10.2	110	133	155	74	80	42	91
M 05	11	23	M4	4	12.5	121	165	191			48	95
M 1	14	30	M5	5	16	138	187	219			45	108
M 2 S	19	40	M6	6	21.5	156	202	245			44	119
M 3 S	28	60	M10	8	31	195	230	293	98	98	53.5	142
M 3 L							262	325				
M 4	38	80	M12	10	41	258	361	444	118	118	64.5	193
M 4 LC							396	479				
M 5 S						310	418	502	187	187	77	245
M 5 L							462	546				

M

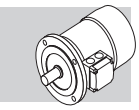

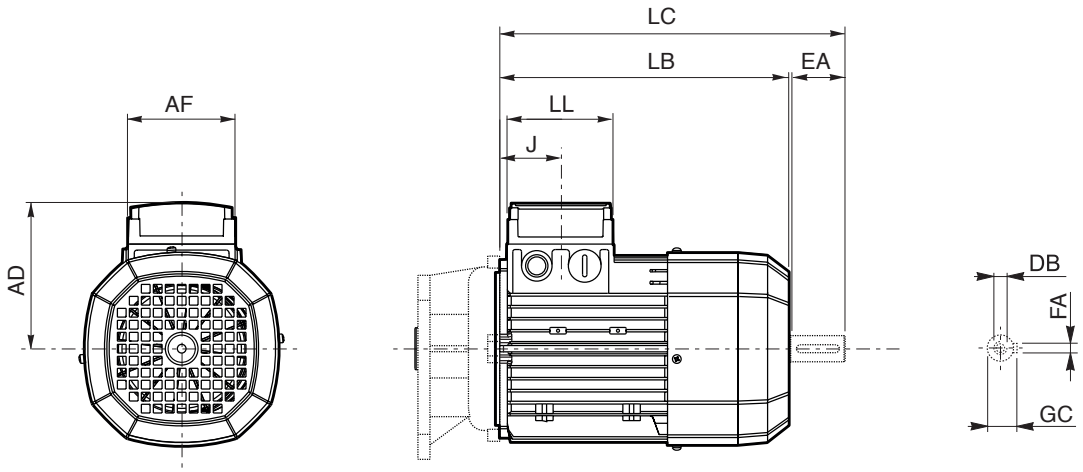

Dimensions are in Inch except when shown in *italic [mm]*

	Rear shaft end					Motor						
	DA	**EA**	**DB**	**FA**	**GC**	**AC**	**LB**	**LC**	**AF**	**LL**	**J**	**AD**
M 0	0.354	0.787	*M3*	0.118	0.402	4.331	5.236	6.102	2.913	3.150	1.654	3.583
M 05	0.433	0.906	*M4*	0.157	0.492	4.764	6.496	7.520			1.890	3.740
M 1	0.551	1.181	*M5*	0.197	0.630	5.433	7.362	8.622			1.772	4.252
M 2 S	0.748	1.575	*M6*	0.236	0.846	6.142	7.953	9.646			1.732	4.685
M 3 S	1.102	2.362	*M10*	0.315	1.220	7.677	9.055	11.535	3.858	3.858	2.106	5.591
M 3 L							10.315	12.795				
M 4	1.496	3.150	*M12*	0.394	1.614	10.157	14.213	17.480	4.646	4.646	2.539	7.598
M 4 LC							15.591	18.858				
M 5 S						12.205	16.457	19.764	7.362	7.362	3.031	9.646
M 5 L							18.189	21.496				

M_FD

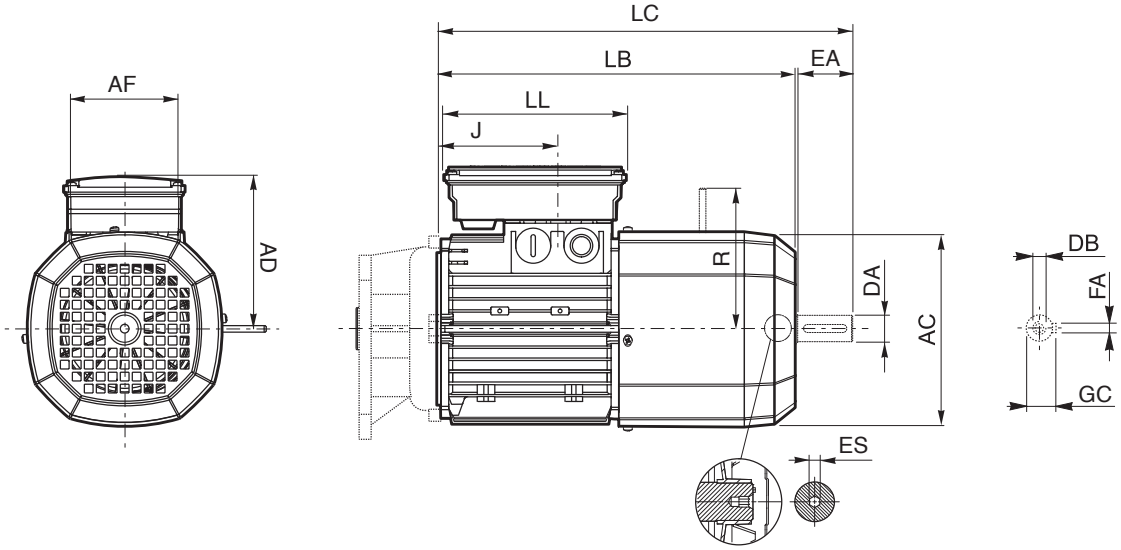

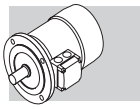

Dimensions are in [mm]

	Rear shaft end					Motor								
	DA	**EA**	**DB**	**FA**	**GC**	**AC**	**LB**	**LC**	**AF**	**LL**	**J**	**AD**	**R**	**ES**
M 05	11	23	M4	4	12.5	121	231	256	98	133	48	122	96	5
M 1	14	30	M5	5	16	138	248	280			73	135	103	
M 2 S	19	40	M6	6	21.5	156	272	314			88	146	129	
M 3 S	28	60	M10	8	31	195	326	389	110	165	124.5	158	160	6
M 3 L							353	416						
M 4	38	80	M12	10	41	258	470	553	140	188	185.5	210	204 (1)	
M 4 LC							495	578			64.5		226	
M 5 S						310	558	642	187	187	77	245	266	—
M 5 L							602	686						

NOTE:
1) For FD07 brake value R=226.

ES hexagon is not supplied with PS option.

M_FD

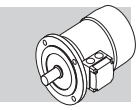

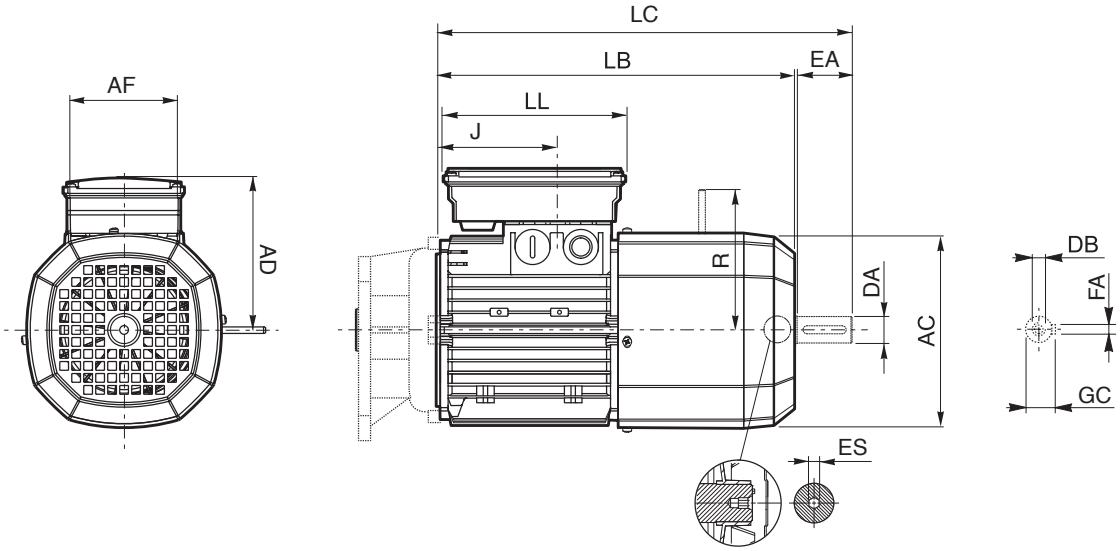

Dimensions are in Inch except when shown in *italic [mm]*

	Rear shaft end					Motor								
	DA	**EA**	**DB**	**FA**	**GC**	**AC**	**LB**	**LC**	**AF**	**LL**	**J**	**AD**	**R**	**ES**
M 05	0.433	0.906	*M4*	0.157	0.492	4.764	9.094	10.079	3.858	5.236	1.890	4.803	3.780	0.197
M 1	0.551	1.181	*M5*	0.197	0.630	5.433	9.764	11.024			2.874	5.315	4.055	
M 2 S	0.748	1.575	*M6*	0.236	0.846	6.142	10.709	12.362			3.465	5.748	5.079	
M 3 S	1.102	2.362	*M10*	0.315	1.220	7.677	12.835	15.315	4.331	6.496	4.902	6.220	6.299	0.236
M 3 L							13.898	16.378						
M 4	1.496	3.150	*M12*	0.394	1.614	10.157	18.504	21.772	5.512	7.402	7.303	8.268	8.031(1)	
M 4 LC							19.488	22.756			2.539		8.898	
M 5 S						12.205	21.969	25.276	7.362	7.362	3.031	9.646	10.472	—
M 5 L							23.701	27.008						

NOTE:
1) For FD07 brake value R=8.898

ES hexagon is not supplied with PS option.

M_FA

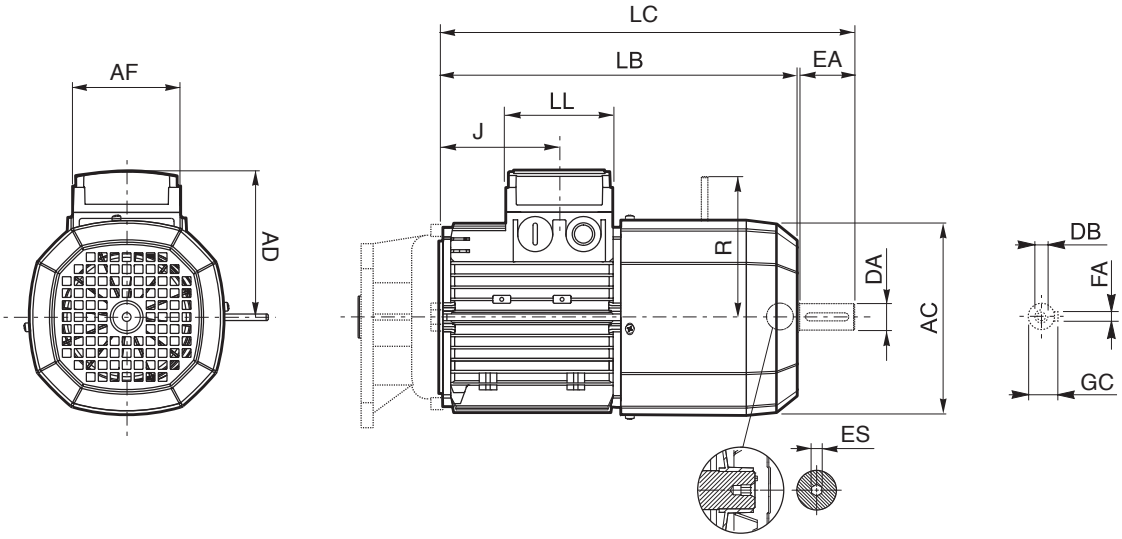

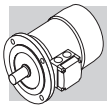

Dimensions are in [mm]

	Rear shaft end					Motor								
	DA	**EA**	**DB**	**FA**	**GC**	**AC**	**LB**	**LC**	**AF**	**LL**	**J**	**AD**	**R**	**ES**
M 05	11	23	M4	4	12.5	121	231	256	74	80	48	95	116	5
M 1	14	30	M5	5	16	138	248	280			73	108	124	
M 2 S	19	40	M6	6	21.5	156	272	314			88	119	134	
M 3 S	28	60	M10	8	31	195	326	389	98	98	124.5	142	160	6
M 3 L							353	416						
M 4	38	80	M14	10	41	258	470	553	140	188	185.5	210	200 (1)	
M 4 LC							495	578			64.5		217	
M 5 S			M12			310	558	642	187	187	77	245	247	—
M 5 L							602	686						

NOTE:
1) For FA07 brake value R=217.

Dimensions AD, AF, LL and V, relevant to terminal box of motors M…FA featuring the separate brake supply (option SA), are coincident with corresponding dimensions of same-size M…FD motors

ES hexagon is not supplied with PS option.

M_FA

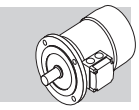

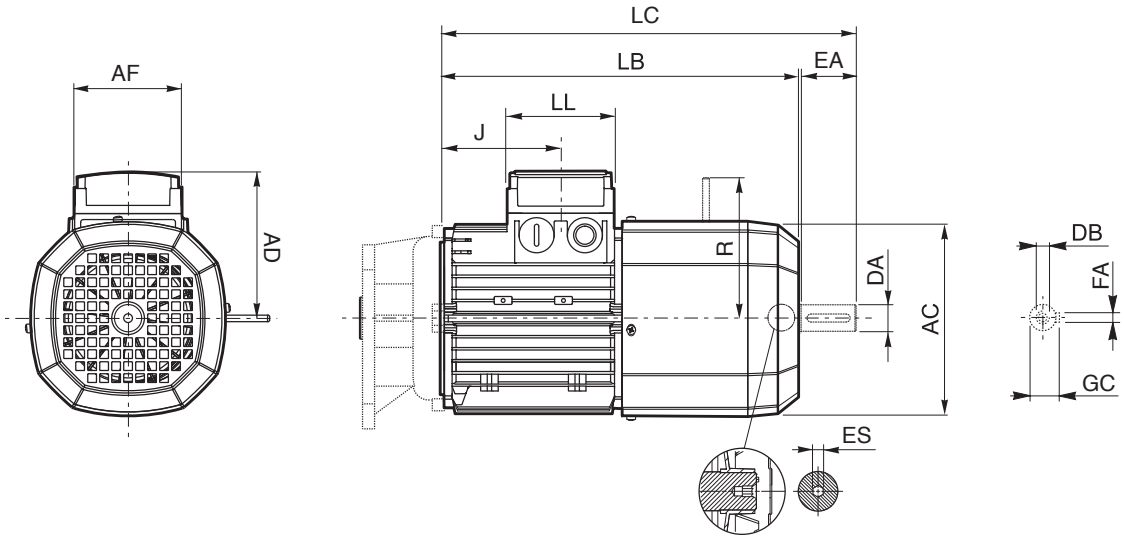

Dimensions are in Inch except when shown in *italic [mm]*

	Rear shaft end					Motor								
	DA	**EA**	**DB**	**FA**	**GC**	**AC**	**LB**	**LC**	**AF**	**LL**	**J**	**AD**	**R**	**ES**
M 05	0.433	0.906	*M4*	0.157	0.492	4.764	9.094	10.079	2.913	3.150	1.890	3.740	4.567	0.197
M 1	0.551	1.181	*M5*	0.197	0.630	5.433	9.764	11.024			2.874	4.252	4.882	
M 2 S	0.748	1.575	*M6*	0.236	0.846	6.142	10.709	12.362			3.465	4.685	5.276	
M 3 S	1.102	2.362	*M10*	0.315	1.220	7.677	12.835	15.315	3.858	3.858	4.902	5.591	6.299	0.236
M 3 L							13.898	16.378						
M 4	1.496	3.150	*M14*	0.394	1.614	10.157	18.504	21.772	5.512	7.402	7.303	8.268	7.874[1]	
M 4 LC							19.488	22.756			2.539		8.543	
M 5 S			*M12*			12.205	21.969	25.276	7.362	7.362	3.031	9.646	9.724	—
M 5 L							23.701	27.008						

NOTE:
1) For FA07 brake value R=8.543

Dimensions AD, AF, LL and V, relevant to terminal box of motors M…FA featuring the separate brake supply (option SA), are coincident with corresponding dimensions of same-size M…FD motors

ES hexagon is not supplied with PS option.

BR_CAT_300M_NEMA_ENG_R00_4	
	Description
35	Added lubrication table for 300M Series gearboxes supplied with oil.
37	Added variants for gearboxes complete with lubricant.
407	Added IEC predispositions for 311M L1 VK gearboxes.
401..524	Updated FZP output version dimensions (311M-325).
245, 261, ..., 520, 524	Removed note regarding the indication of screws and tightening torques for axial blockage of customer shaft in FDK and FZP versions.
533, 534, ..., 541	Added into table the size 323 with relative hydraulic predispositions and overall dimensions.
543, 545, ..., 550	Updated hydraulic motor section from H6 to H12.

25 10 2025

This publication supersedes and replaces any previous edition and revision. We reserve the right to implement modifications without notice.
This catalogue cannot be reproduced, even partially, without prior consent.

We have a relentless commitment to excellence, innovation & sustainability. Our team creates, distributes and services world-class power transmission & drive solutions to keep the world in motion.

HEADQUARTERS
Bonfiglioli S.p.A
Via Cav. Clementino Bonfiglioli, 1
40012 Calderara di Reno - Bologna (Italy)
Tel. +39 051 6473111